Print Number：　　Print Date：

NOBLELIFT

Scan QR Code for More

Service Hotline: 836115

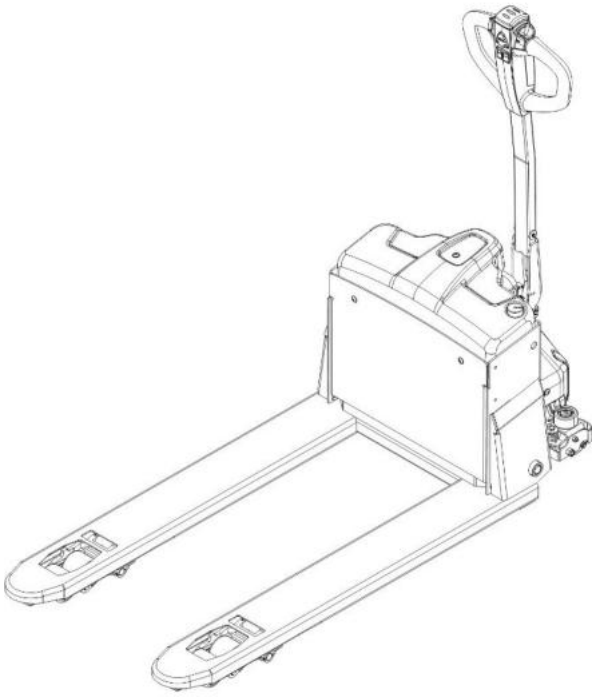

Electric Pallet Truck EPT15Q

PARTS MANUAL

502546020101

Version：V06

Truck Identification Number From：

Parts Manual

EPT15Q-PM06EN

Please order spare parts from authorized dealers of Noblelift Intelligent Equipment Co., LTD.

In order to avoid wrong delivery, all the orders for spare parts should specify the following items:

- Truck model, identification number and manufacture year.
- Orders for spare parts of mast, hydraulic transmission unit, steering axle, motor, etc. shall indicate the manufacture number of these parts.
- Codes for Noblelift spare parts are shown in the table of parts manual. Please also pay attention to the description of supply status, order quantity, etc. (check the number listed in "Mark" column of the parts manual).

"Mark" Column:

The unmarked indicates the parts are in short supply cycle.

Number 1: supply as package. Indicating these that parts are small parts and seal parts, which are supplied in package unit and in short supply cycle.

Number 2: supply with constraints. Indicating that these spare parts are not in stock and will be prepared for production after receiving the order from customers, which are in long supply cycle.

Number 3: phasing-out supply. Indicating that these parts will be replaced by new parts due to technical improvements and the current stock will not be available when these parts run out. Please check the description of technical improvements notice.

Number 4: supply as assembly. Indicating that these parts are assembly parts defined by manufacture process, which cannot be supplied as a single part.

Number 5: check other tables.

This parts manual is the property of Noblelift and can be shared under the confidential agreement only, Noblelift has the right to claim for compensation of any unauthorized use. Copy without permission is not allowed. Figures in the manual are not limited by the original design. Noblelift Intelligent Equipment Co., LTD reserves the right to improve the products for continuous technology progress.

Table of Contents

Chapter 1: Drive System 1
01 Drive Unit Steering (502546013501) 1
02 Drive Assembly (YX) (509946013002) 3
03 Drive Assembly (YX) (509946013004) 5
Chapter 2: Hydraulic System 7
01 Hydraulic Components (502546024001) 7
01 Hydraulic Components (502546024001) Continuation 9
02 Pump Unit (502546024002) 11
Chapter 3: Truck Frame 13
01 Truck Frame (502546038501) 13
02 Truck Frame (502546038502) 15
Chapter 4: Steering System, Braking System, Wheels 17
01 Tiller Unit (502546011001) 17
02 Tiller (502546011002) 19
03 Tiller（509946011005） 21
04 Load Wheel (Tandem) (502546017001) 23
05 Caster (502546016501) 25
06 Caster (502546016502) 27
Chapter 5: Electrical Parts 29
01 Wire Harness (502546033001) 29
02 Wire Harness (502546033002) 31
03 Charger (502546036501) 33
03 Charger (502546036501) Continue 35
04 Traction Battery (502546037001) 37
Chapter 6: Others 39
01 Labels and Decals-EU (502546047001) 39
02 Labels and Decals-US (502546047002) 41
Appendix 43
01 Electrical Circuit Diagram (502546045501) 43
02 Hydraulic Circuit Diagram (508046045502) 44
03 Consumable Parts List 45

Chapter 1: Drive System

01 Drive Unit Steering (502546013501)

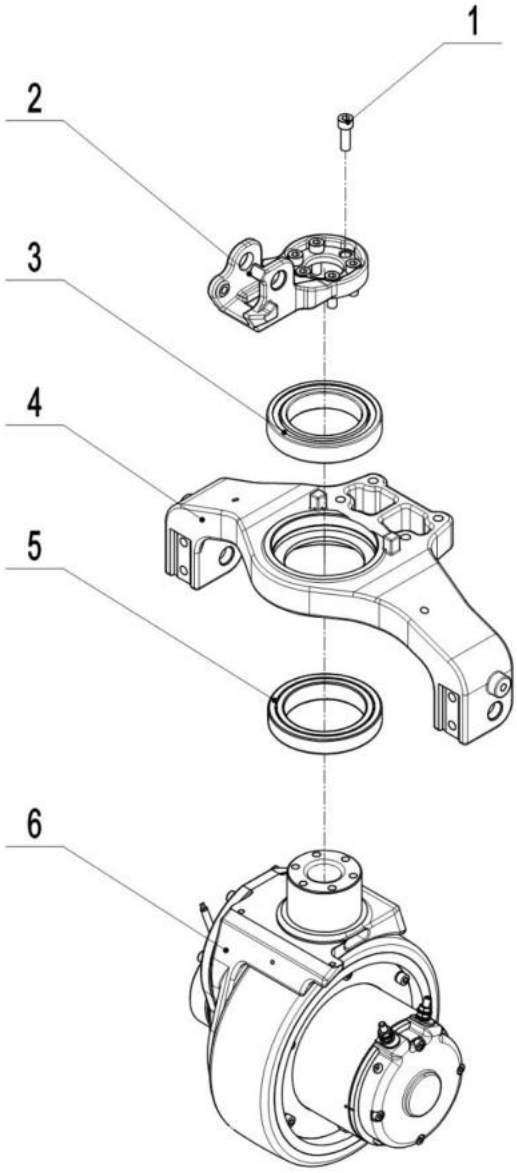

502546013501

1= Supply as package. 2= Supply with constraints. 3= Phasing-out supply. 4= Supply as assembly. 5= Check other tables.

01 Drive Unit Steering（502546013501）

No.	Item Code	Mark	Item Description	Qty.	Substitute	Note
1	910200200058		Screw	6		
2	502513520001		Flange	1		
3	910700200072		Bearing	1		
4	502513520000		Wheel Mount	1		
5	910700600044		Bearing	1		
6	940900100029		Drive Unit	1		220
6	940900100062		Drive Unit	1		210

02 Drive Assembly (YX) (509946013002)

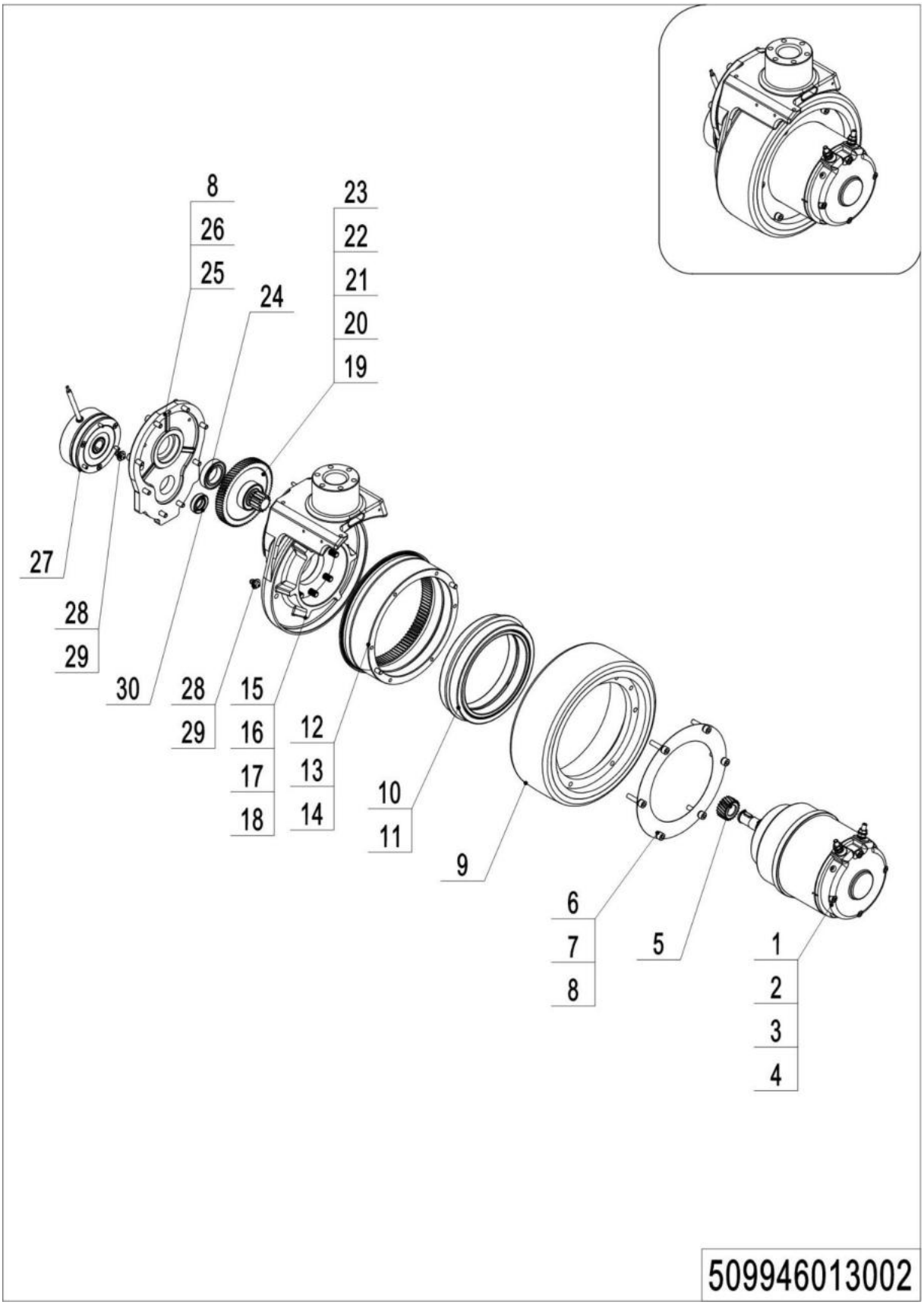

02 Drive Assembly (YX) (509946013002)

No.	Item Code	Mark	Item Description	Qty.	Substitute	Note
1	961002200003		Motor	1		
2	910600800005		Flat Key	2		
3	910401300006		Circlip	1		
4	910401300007		Circlip	1		
5	961000700006		Gear	1		
6	961001300009		Scraper Seal	1		
7	910200200140		Screw	6		
8	910400500018		Spring Washer	14		
9	961001300010		Wheel	1		
10	910700200044		Bearing	2		
11	910401400023		Circlip	1		
12	961001300008		Gear	1		
13	910600100013		Cylindrical Pin	2		
14	961001300007		Oil Seal	1		
15	961002200001		Gearbox	1		
16	910200200147		Screw	5		
17	910400500019		Spring Washer	5		
18	910600100003		Cylindrical Pin	1		
19	961001300002		Gear	1		
20	961001300005		Gear Shaft	1		
21	910600800006		Flat Key	1		
22	910700200057		Bearing	1		
23	910401300008		Circlip	1		
24	910700200046		Bearing	1		
25	961002200002		Cover	1		
26	910200200139		Screw	8		
27	961002200004		Brake	1		
28	911200100003		Oil Cup	2		
29	910800900010		Bonded Washer	2		
30	961000700012		Oil Seal	1		

1= Supply as package. 2= Supply with constraints. 3= Phasing-out supply. 4= Supply as assembly. 5= Check other tables.

03 Drive Assembly (YX) (509946013004)

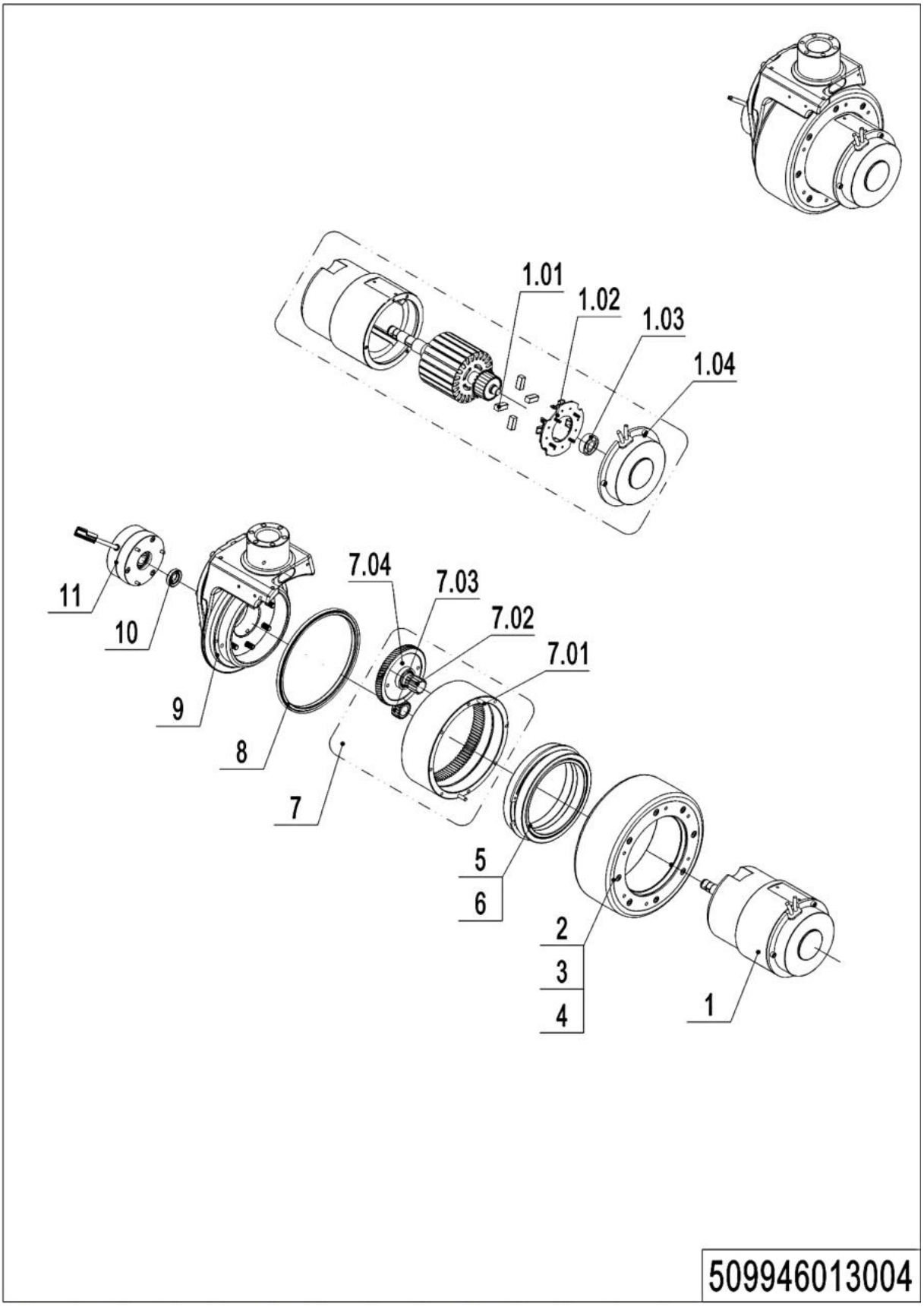

1= Supply as package. 2= Supply with constraints. 3= Phasing-out supply. 4= Supply as assembly. 5= Check other tables.

03 Drive Assembly(YX)(509946013004)

No.	Item Code	Mark	Item Description	Qty.	Substitute	Note
1	961004000012		Motor	1		
1.01	507798520023		Carbon brush	4		
1.02	507798520024		Holde	1		
1.03	507798520021		Bearing	1		
1.04	507798520022		Cover	1		
2	961004000009		Wheel	1		
3	961004000011		Oil Seal	1		
4	910200200202		Screw	8		
5	910700200044		Bearing	2		
6	961004000007		Sleeve	1		
7	507798510006		Gear	1		
7.01	961004000006		Gear	1		
7.02	961004000003		Gear Shaft	1		
7.03	961004000002		Gear	1		
7.04	961004000005		Gear	1		
8	961004000010		Oil Seal	1		
9	509998510051		Gearbox	1		
10	961000700012		Oil Seal	1		
11	961002200004		Brake	1		

Chapter 2: Hydraulic System

01 Hydraulic Components (502546024001)

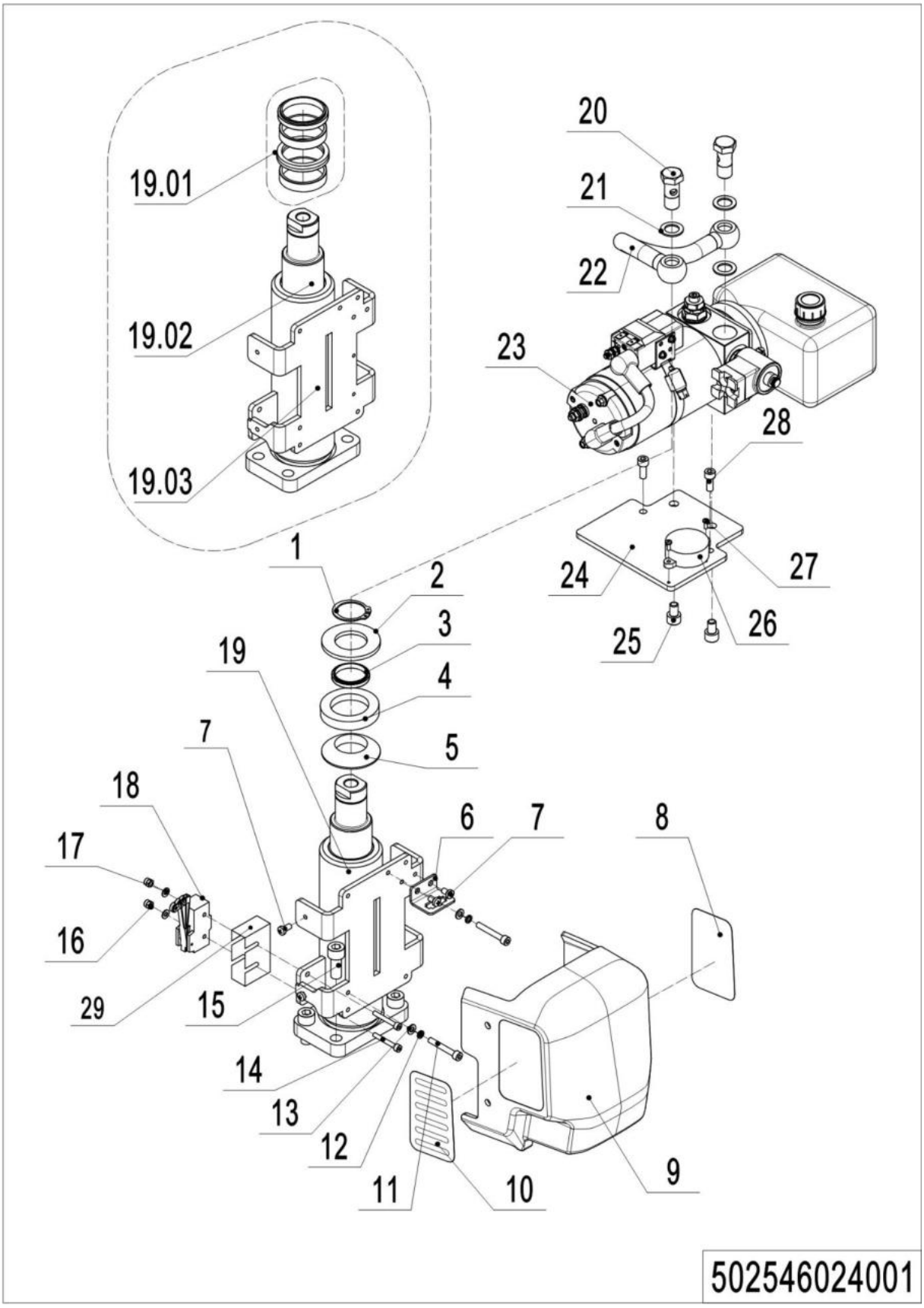

1= Supply as package. 2= Supply with constraints. 3= Phasing-out supply. 4= Supply as assembly. 5= Check other tables.

01 Hydraulic Components（502546024001）

No.	Item Code	Mark	Item Description	Qty	Substitute	Note
1	910401300016		Circlip	1		
2	910400100016		Flat Washer	1		
3	910800400011		Wiper Seal	1		
4	910400700005		Cone Washer	1		
5	910400600005		Spherical Washer	1		
6	921300300019		Holder	1		
7	910200500036		Screw	6		
8	502547020001		Label	1		
9	502524020099		Cover	1		
10	502547020000		Label	1		
11	910200200027		Screw	2		
12	910400500004		Spring Washer	2		
13	910400100004		Flat Washer	2		
14	910200500028		Screw	2		
15	910200200076		Screw	4		
16	910300500001		Nut	2		
17	910400100003		Flat Washer	2		
18	920200300003		Microswitch	1		
19	502524010000		Cylinder	1		
19.01	508598510005		Seal Kit	1		
19.02	502524020005		Plunger rod	1		
19.03	502524010001		Cylinder Block	1		
20	911300200003		Hinge Bolt	1		
21	910800900003		Bonded Washer	2		
22	502524010002		Hose	1		
23	950900100110		Pump Unite	1		
24	502524020006		Plate	1		
25	910200200053		Screw	1		
26	509998520062		buzzer	1		
27	910200500010		Screw	2		

01 Hydraulic Components (502546024001) Continuation

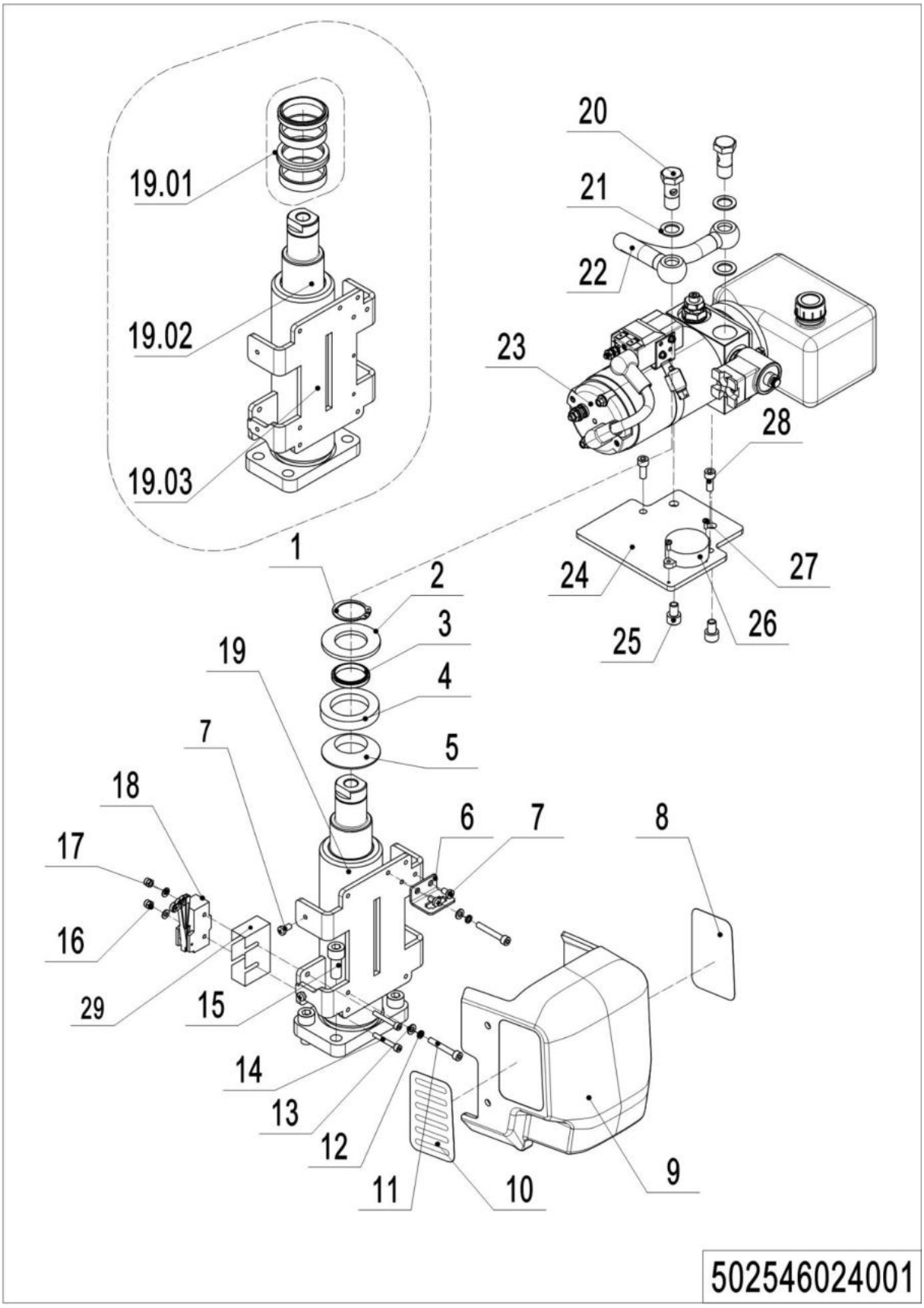

1= Supply as package. 2= Supply with constraints. 3= Phasing-out supply. 4= Supply as assembly. 5= Check other tables.

01 Hydraulic Components（502546024001）Continuation

No.	Item Code	Mark	Item Description	Qty.	Substitute	Note
28	910200200035		Screw	2		
29	920200300007		Protective Cover	1		

1= Supply as package. 2= Supply with constraints. 3= Phasing-out supply. 4= Supply as assembly. 5= Check other tables.

02 Pump Unit (502546024002)

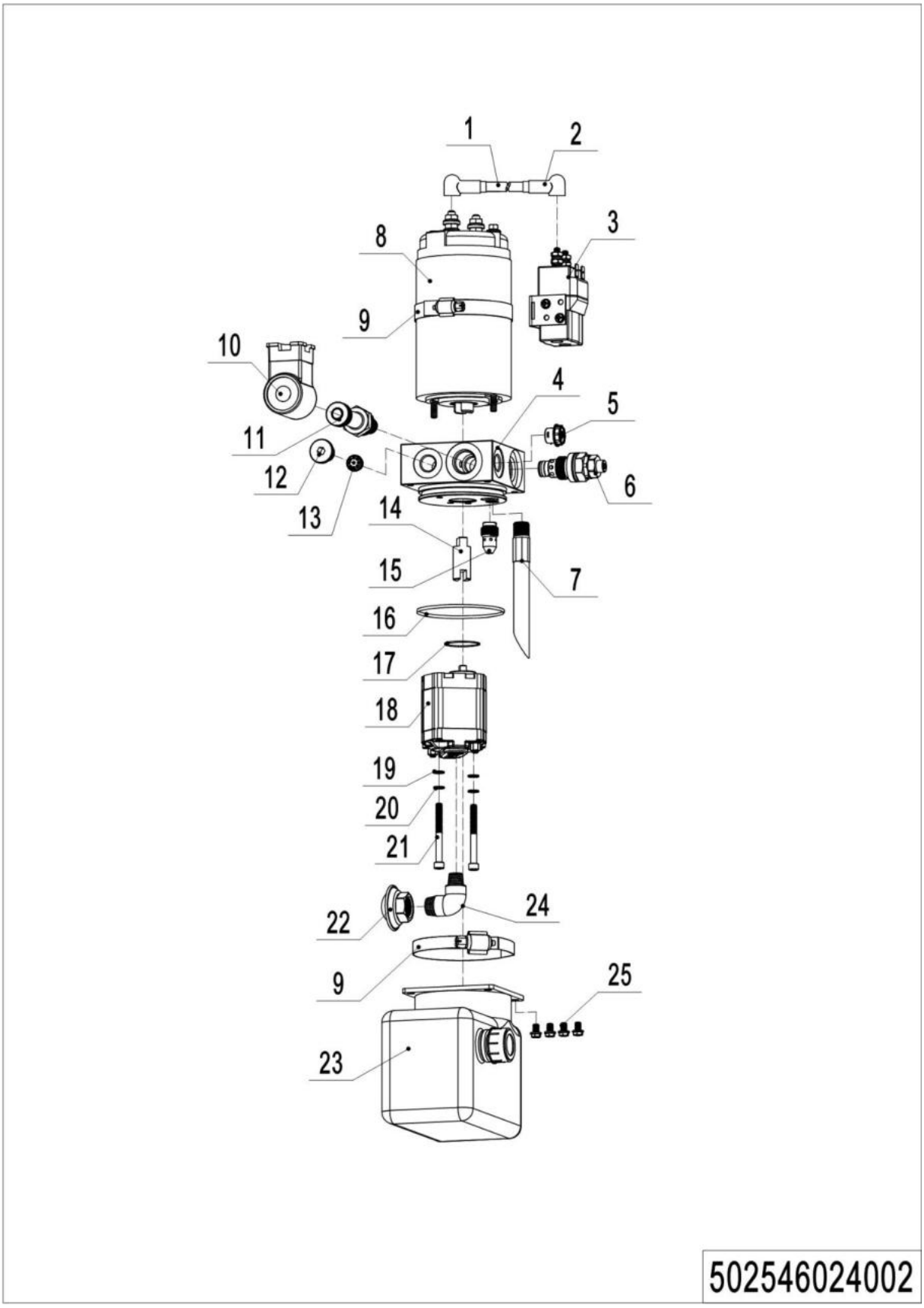

1= Supply as package. 2= Supply with constraints. 3= Phasing-out supply. 4= Supply as assembly. 5= Check other tables.

02 Pump Unit (502546024002)

No.	Item Code	Mark	Item Description	Qty.	Substitute	Note
1	502598510100		Wiring Harness	1		
2	502598520100		Jacket	2		
3	502598510101		Switch	1		
4	502598520101		Valve Block	1		
5	502598520102		Dust Cap	1		
6	502598520103		Overflow Valve	1		
7	502598520104		Pipe	1		
8	502598510102		Motor	1		
9	502598510103		Hoop	2		
10	502598520105		Coil	1		
11	502598510104		Magnetic Valve	1		
12	502598520106		End Cap	1		
13	502598510105		Check Valve	1		
14	502598520107		Coupling	1		
15	502598510106		Compensation Valve	1		
16	502598520108		O-Ring	1		
17	502598520109		O-Ring	1		
18	502598510107		Gear Pump	1		
19	502598520110		Washer	2		
20	502598520111		Washer	2		
21	502598520112		Bolt	2		
22	502598520113		Filter	1		
23	502598510108		Tank	1		
24	502598520114		Oil Tube	1		
25	502598520115		Bolt	4		

1= Supply as package. 2= Supply with constraints. 3= Phasing-out supply. 4= Supply as assembly. 5= Check other tables.

Chapter 3: Truck Frame

01 Truck Frame (502546038501)

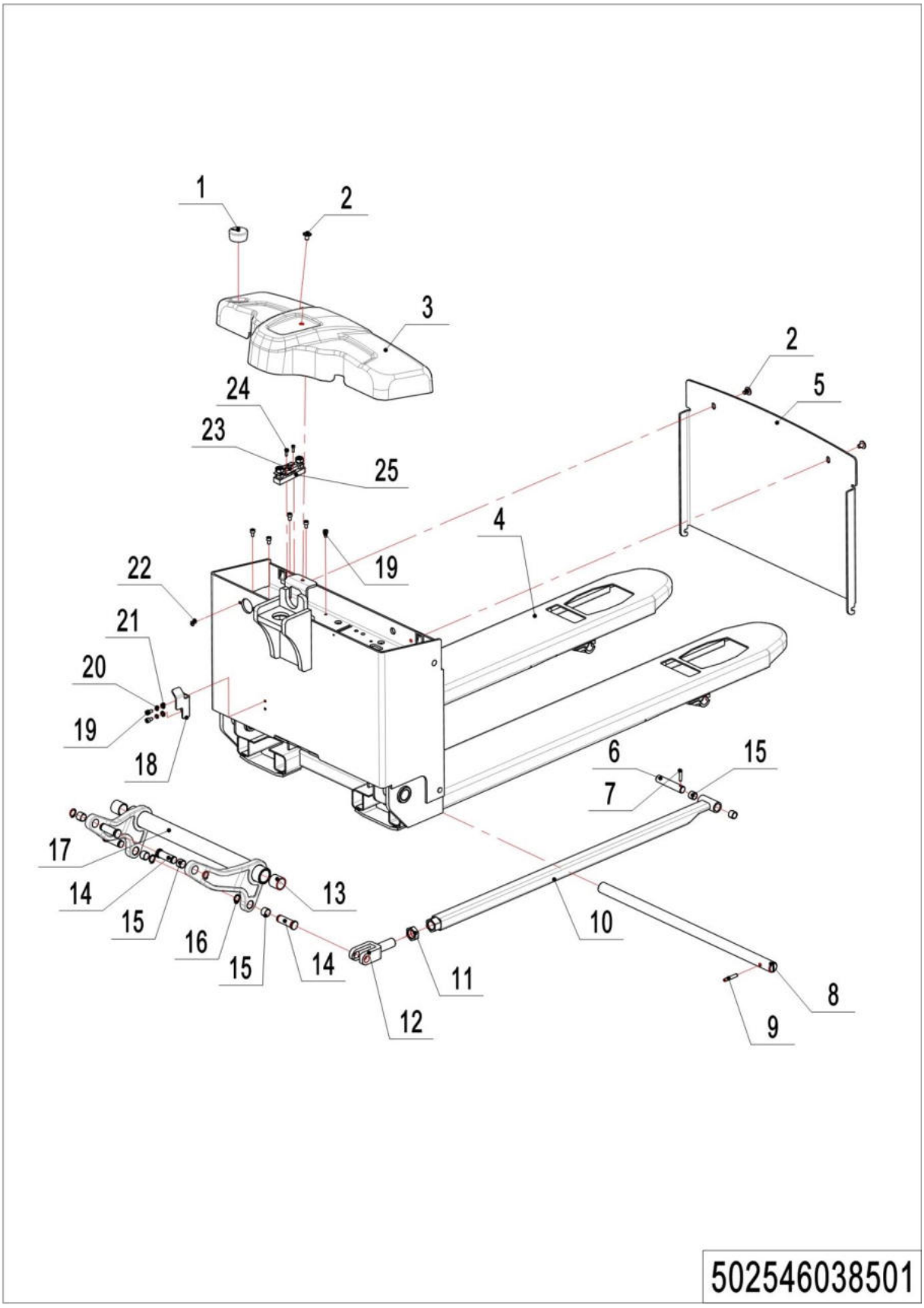

1= Supply as package. 2= Supply with constraints. 3= Phasing-out supply. 4= Supply as assembly. 5= Check other tables.

01 Truck Frame （502546038501）

No.	Item Code	Mark	Item Description	Qty.	Substitute	Note
1	502538520032		Rubber Plug	1		
2	941100100001		Screw	3		
3	502538520099		Cover	1		
4	502538510000		Chassis(540x1150)	1		
4	502538510005		Chassis(540x1220)	1		
5	502538520018		Close Plate	1		
6	502338520030		Axle	2		
7	910600500002		Spring Pin	2		
8	502538520025		Axle	1		
9	910600400041		Spring Pin	1		
10	502538510002		Push Rod (1150)	2		
10	502538510007		Push Rod (1220)	2		
11	910300400008		Nut	2		
12	502338520027		Push Rod Fork	2		
13	940500100097		Bushing	2		
14	502338520026		Pin	4		
15	940500100083		Bushing	8		
16	910401300007		Circlip	4		
17	502538510003		Rise Arm(540)	1		
18	502538520028		Stop Plate	1		
19	910200200032		Screw	7		
20	910400500005		Spring Washer	2		
21	910400100005		Flat Washer	2		
22	910200600016		Screw	2		
23	920100100004		Fuse	1		
24	910200200015		Screw	2		
25	920100400002		Fuse Holder	1		

1= Supply as package. 2= Supply with constraints. 3= Phasing-out supply. 4= Supply as assembly. 5= Check other tables.

02 Truck Frame (502546038502)

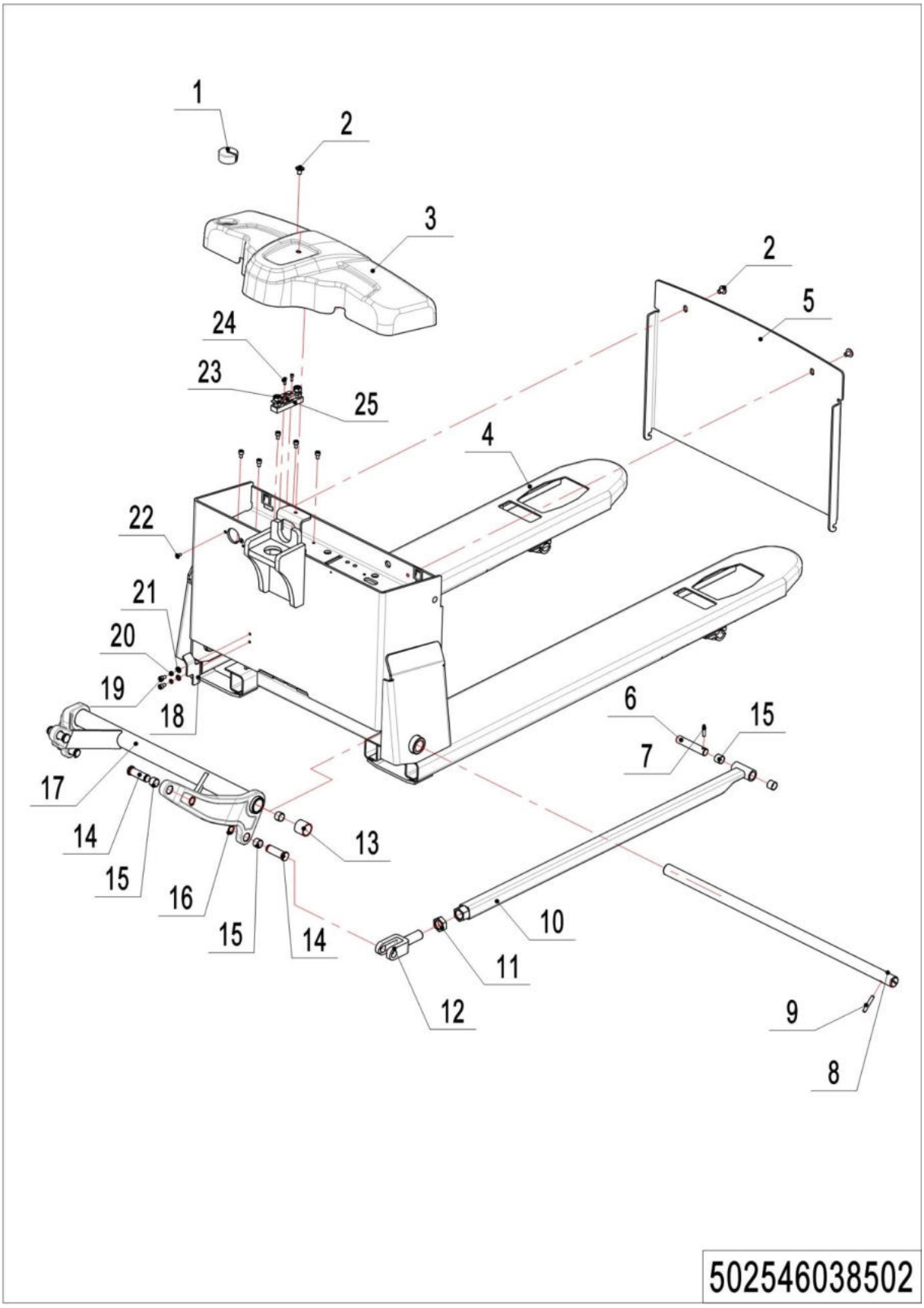

1= Supply as package. 2= Supply with constraints. 3= Phasing-out supply. 4= Supply as assembly. 5= Check other tables.

02 Truck Frame （502546038502）

No.	Item Code	Mark	Item Description	Qty.	Substitute	Note
1	502538520032		Rubber Plug	1		
2	941100100001		Screw	3		
3	502538520099		Cover	1		
4	502538510010		Chassis(685x1150)	1		
4	502538510006		Chassis(685x1220)	1		
5	502538520018		Close Plate	1		
6	502338520030		Axle	2		
7	910600500002		Spring Pin	2		
8	502538520042		Axle	1		
9	910600400041		Spring Pin	1		
10	502538510002		Push Rod (1150)	2		
10	502538510007		Push Rod (1220)	2		
11	910300400008		Nut	2		
12	502338520027		Push Rod Fork	2		
13	940500100097		Bushing	2		
14	502338520026		Pin	4		
15	940500100083		Bushing	8		
16	910401300007		Circlip	4		
17	502538510004		Rise Arm(685)	1		
18	502538520028		Stop Plate	1		
19	910200200032		Screw	7		
20	910400500005		Spring Washer	2		
21	910400100005		Flat Washer	2		
22	910200200023		Screw	2		
23	920100100004		Fuse	1		
24	910200200015		Screw	2		
25	920100400002		Fuse Holder	1		

1= Supply as package. 2= Supply with constraints. 3= Phasing-out supply. 4= Supply as assembly. 5= Check other tables.

Chapter 4: Steering System, Braking System, Wheels

01 Tiller Unit (502546011001)

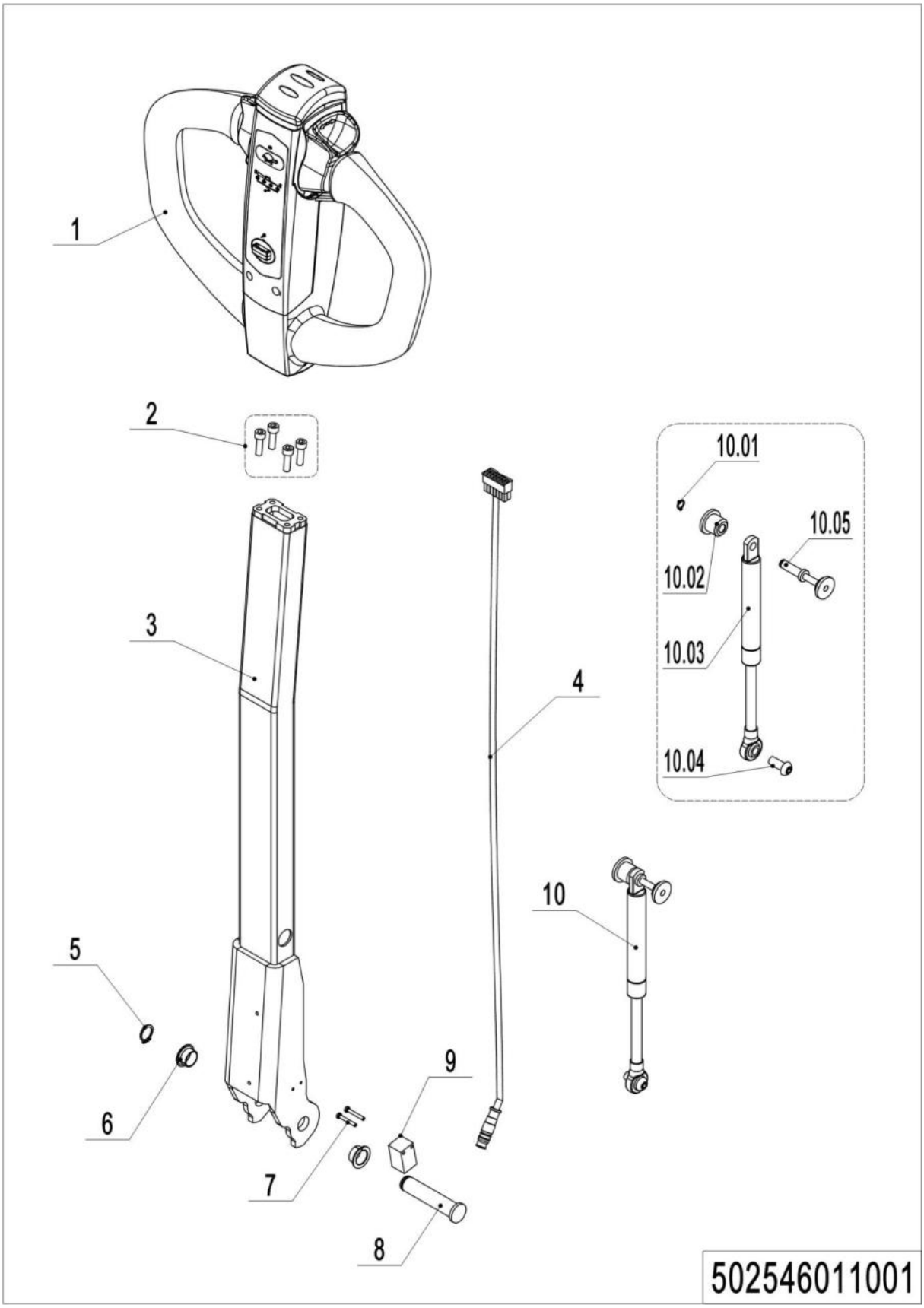

1= Supply as package. 2= Supply with constraints. 3= Phasing-out supply. 4= Supply as assembly. 5= Check other tables.

01 Tiller Unit（502546011001）

No.	Item Code	Mark	Item Description	Qty.	Substitute	Note
1	922100100095	2	Control Handle	1		Handle T410C-5
2	910200200036	1	Screw	4		
3	509911010002		Tiller	1		
4	502533010012		Wiring Harness	1		
5	910401300006		Circlip	1		
6	940500200001		Bushing	2		
7	941101100001	1	Screw	2		
8	508011020004		Pin	1		
9	920200400027		Proximity Switch	1		
10	508098510084		Gas Spring Kit	1		
10.1	910401300001		Circlip	1		
10.2	508011020005		Fixing Base	1		
10.3	508011010001		Gas Spring	1		
10.4	941100100011	1	Screw	1		
10.5	508011010002		Pin	1		

1= Supply as package. 2= Supply with constraints. 3= Phasing-out supply. 4= Supply as assembly. 5= Check other tables.

02 Tiller (502546011002)

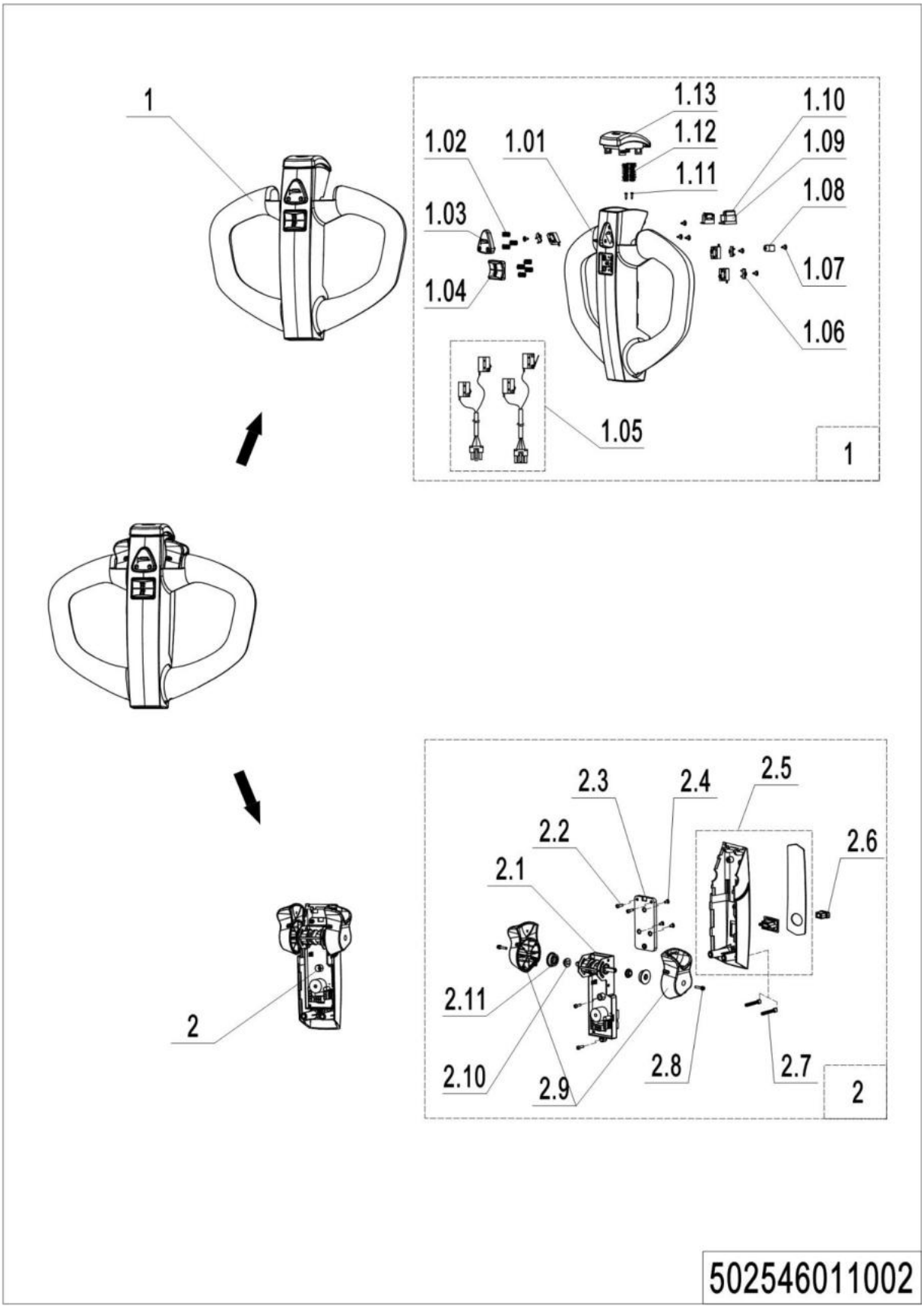

1= Supply as package. 2= Supply with constraints. 3= Phasing-out supply. 4= Supply as assembly. 5= Check other tables.

02 Tiller (502546011002)

No.	Item Code	Mark	Item Description	Qty.	Substitute	Note
1	509998510018	2	Handle Cap Kit	1		
1.01	509998520036	2	Handle Cap	1		
1.02	509998520037		Spring	7		
1.03	509998520038		Button Cap	1		
1.04	509998520039		Button Cap	1		
1.05	509998510019		Microswitch Kits	1		
1.06	509998520045		Locating Plate	3		
1.07	910200600002	1	Screw	7		
1.08	509998520044		Cable Clip	1		
1.09	509998520042		Fixing Mount	1		
1.10	509998520043		Hoop	1		
1.11	910201400001	1	Screw	2		
1.12	509998520041		Spring	1		
1.13	509998520040		Switch	1		
2	502598510001	2	Cover	1		
2.01	509998520046		Accelerator	1		
2.02	910200400004	1	Screw	4		
2.03	509998520047		Fixing Plate	1		
2.04	910200500019	1	Screw	3		
2.05	509998510021		Handle Cap Kit	1		
2.06	509998520048		key	2		
2.07	910200200030	1	Screw	2		
2.08	910200200004	1	Screw	2		
2.09	509998510022		Traction lever	1		
2.10	509998520049		Sleeve	2		
2.11	509998520050		Spacer Bush	2		

1= Supply as package. 2= Supply with constraints. 3= Phasing-out supply. 4= Supply as assembly. 5= Check other tables.

03 Tiller（509946011005）

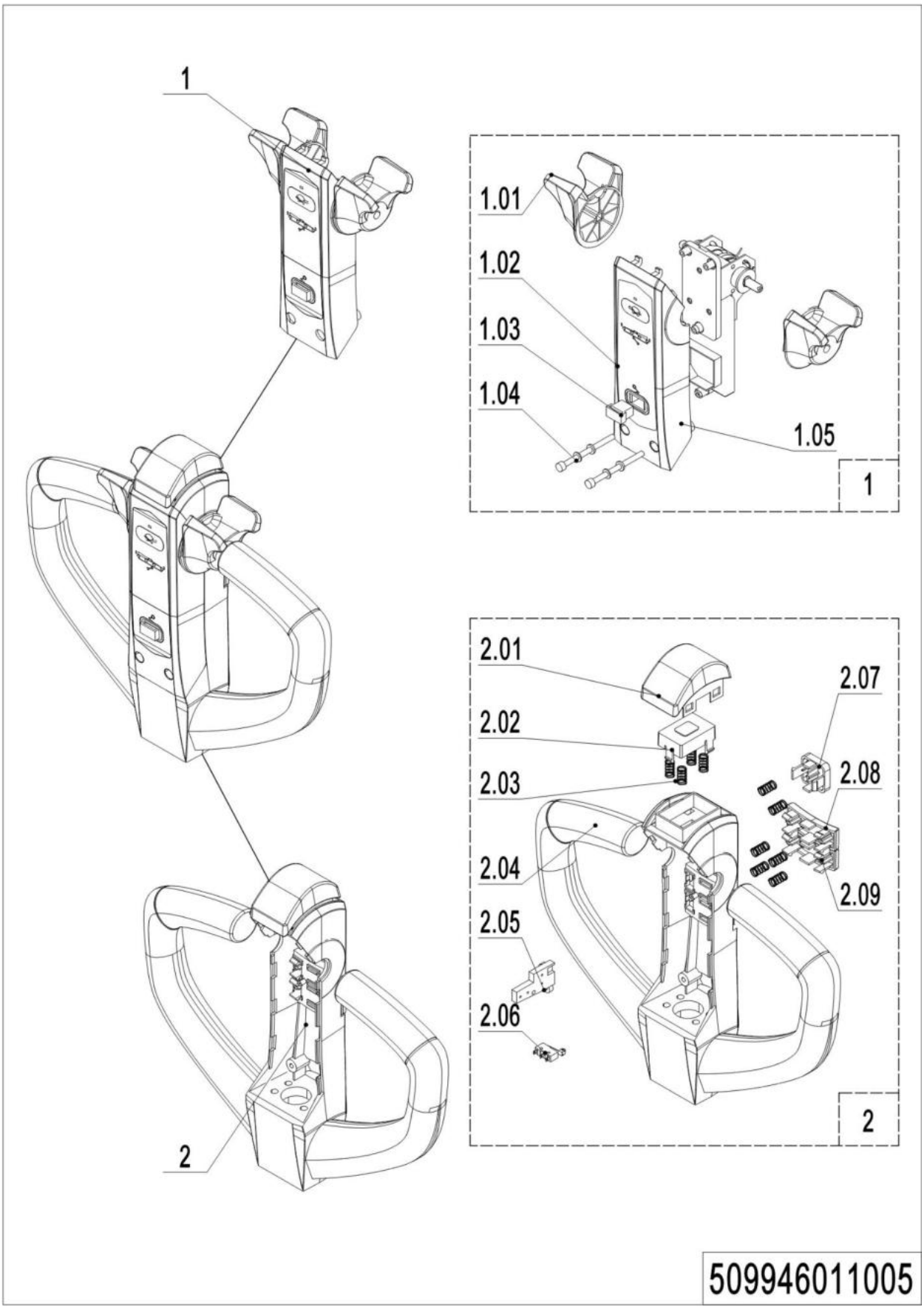

1= Supply as package. 2= Supply with constraints. 3= Phasing-out supply. 4= Supply as assembly. 5= Check other tables.

03 Tiller (509946011005)

No.	Item Code	Mark	Item Description	Qty.	Substitute	Note
1	509998510032	2	Handle Cap	1		
1.01	509998520022		Dial Key	1		
1.02	509998520058		Cap-control handle	1		
1.03	509998520024		Magneticsnap	1		
1.04	910200200030	1	Screw	2		M5*50
1.05	509998520025	2	Cover	1		
2	509998510016		Handle Cap	1		
2.01	509998520027		Button Cap	1		
2.02	509998520028		Cover	1		
2.03	509998520029		Spring	1		θ0.6*θ8.7*16
2.04	509998520030	2	Control Handle body	1		
2.05	509998520031		Wire Harness	1		
2.06	509998520032		Wire Harness	1		
2.07	509998520033		Button Cap	1		
2.08	509998520034		Button Cap	1		
2.09	509998520035		Button Cap	1		

04 Load Wheel (Tandem) (502546017001)

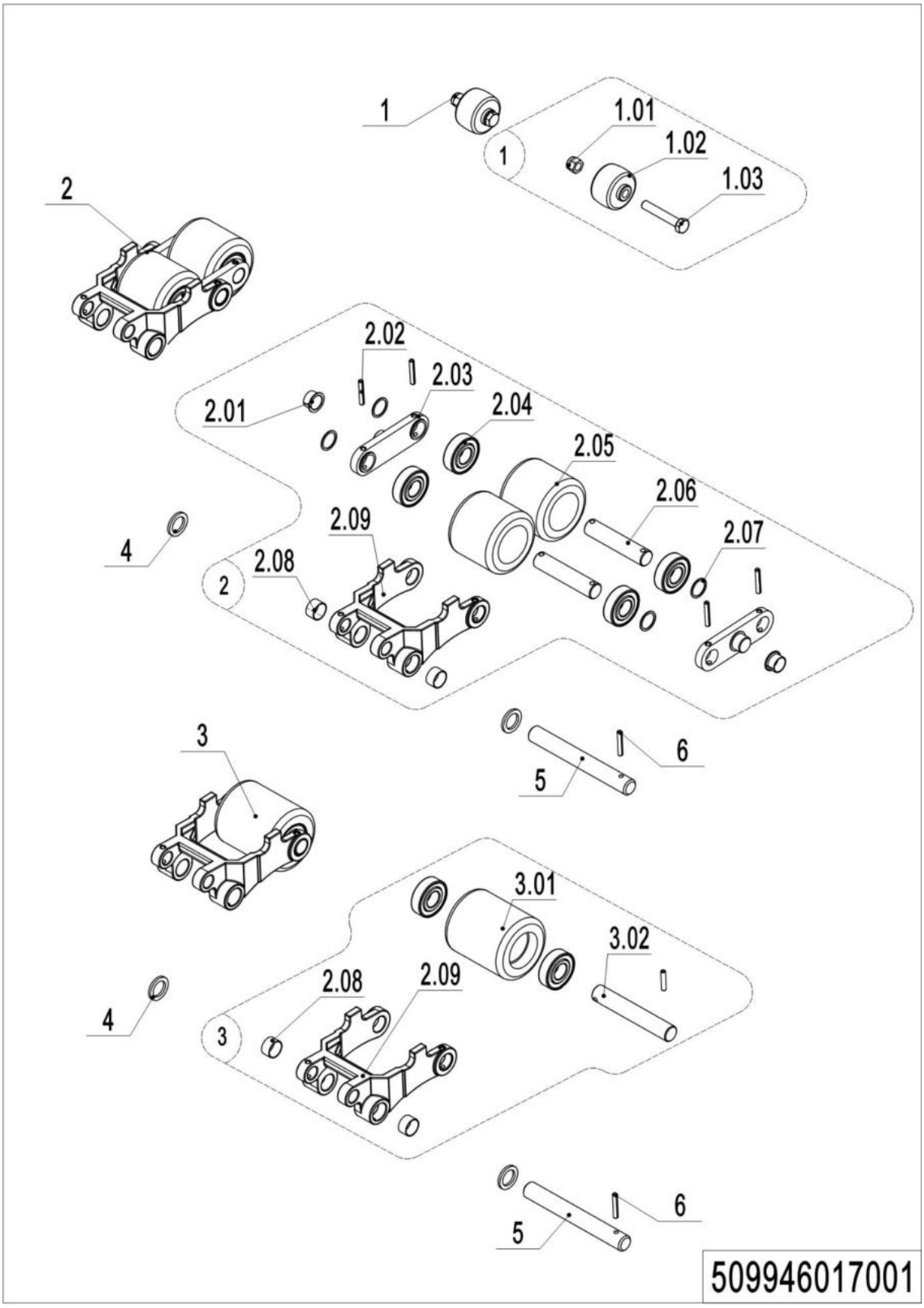

1= Supply as package. 2= Supply with constraints. 3= Phasing-out supply. 4= Supply as assembly. 5= Check other tables.

04 Load Wheel (Tandem) （502546017001）

No.	Item Code	Mark	Item Description	Qty.	Substitute	Note
1	502398510003		Pulley components	2		
1.01	910300500005	1	Nut	2		
1.02	505638520039		Running Pulley	2		
1.03	941100200019	1	Bolt	2		
2	509998510004		Wheel	2		
2.01	940500200038		Bushing	4		
2.02	910600400027	1	Spring Pin	8		
2.03	508017020001		Plate	4		
2.04	910700200019		Bearing	8/4		Double /Single
2.05	940300300047		WheelΦ80x70	4		
2.06	502317020001		Axle	4		
2.07	940600500013		Washer	8/4		Double /Single
2.08	940500100088		Bushing	4		
2.09	508038520130		Riser	2		
3	509998510005	2	Wheel	2		
3.01	940300300023		WheelΦ80x93	2		
3.02	301017020001		Axle	2		
4	502338520033		Roller	4		
5	502338520031		Pin	2		
6	910600400025		Spring Pin	2		

05 Caster (502546016501)

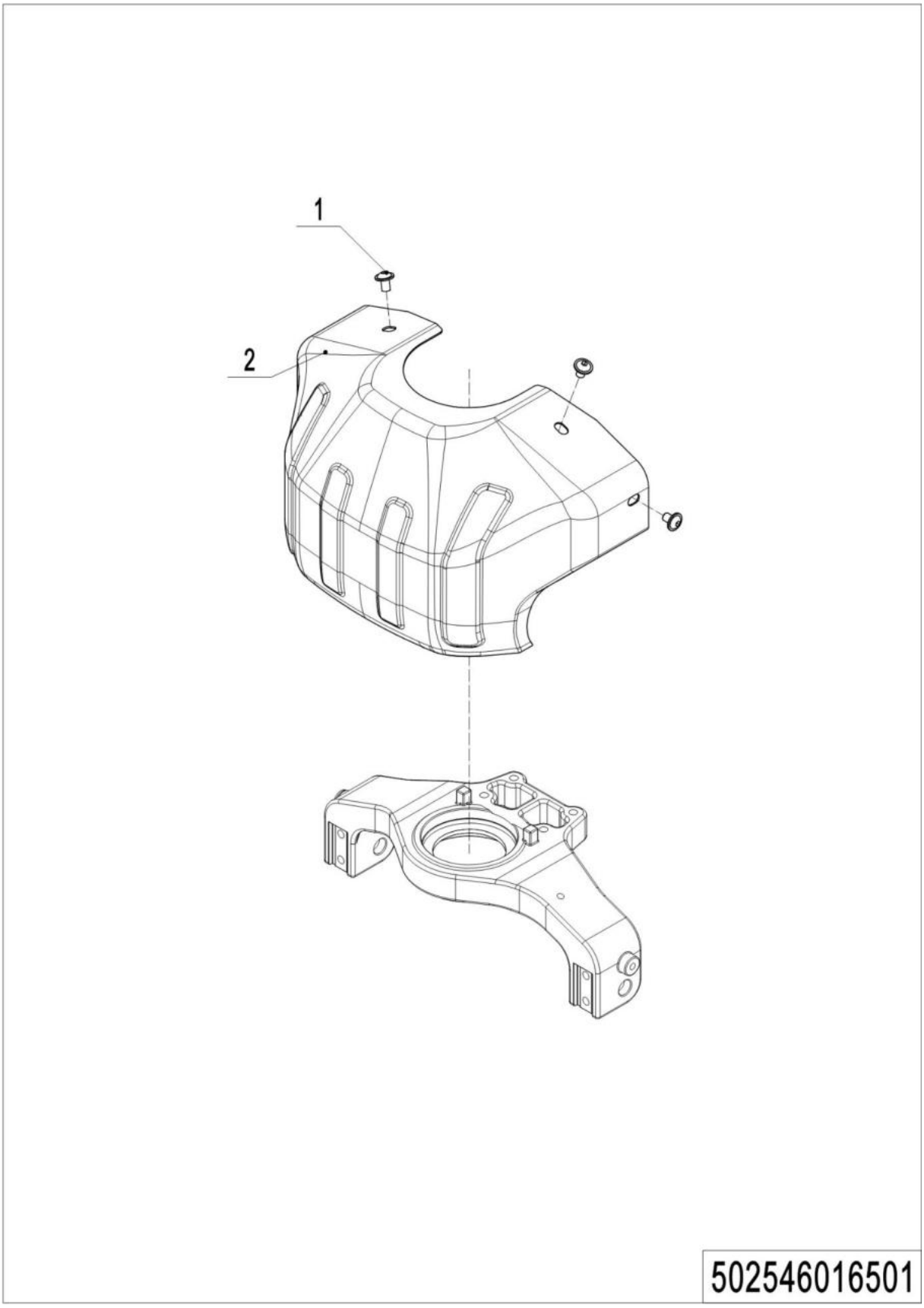

1= Supply as package. 2= Supply with constraints. 3= Phasing-out supply. 4= Supply as assembly. 5= Check other tables.

05 Caster（502546016501）

No.	Item Code	Mark	Item Description	Qty.	Substitute	Note
1	941100100001		Screw	4		
2	502513520003		Apron	1		

1= Supply as package. 2= Supply with constraints. 3= Phasing-out supply. 4= Supply as assembly. 5= Check other tables.

06 Caster (502546016502)

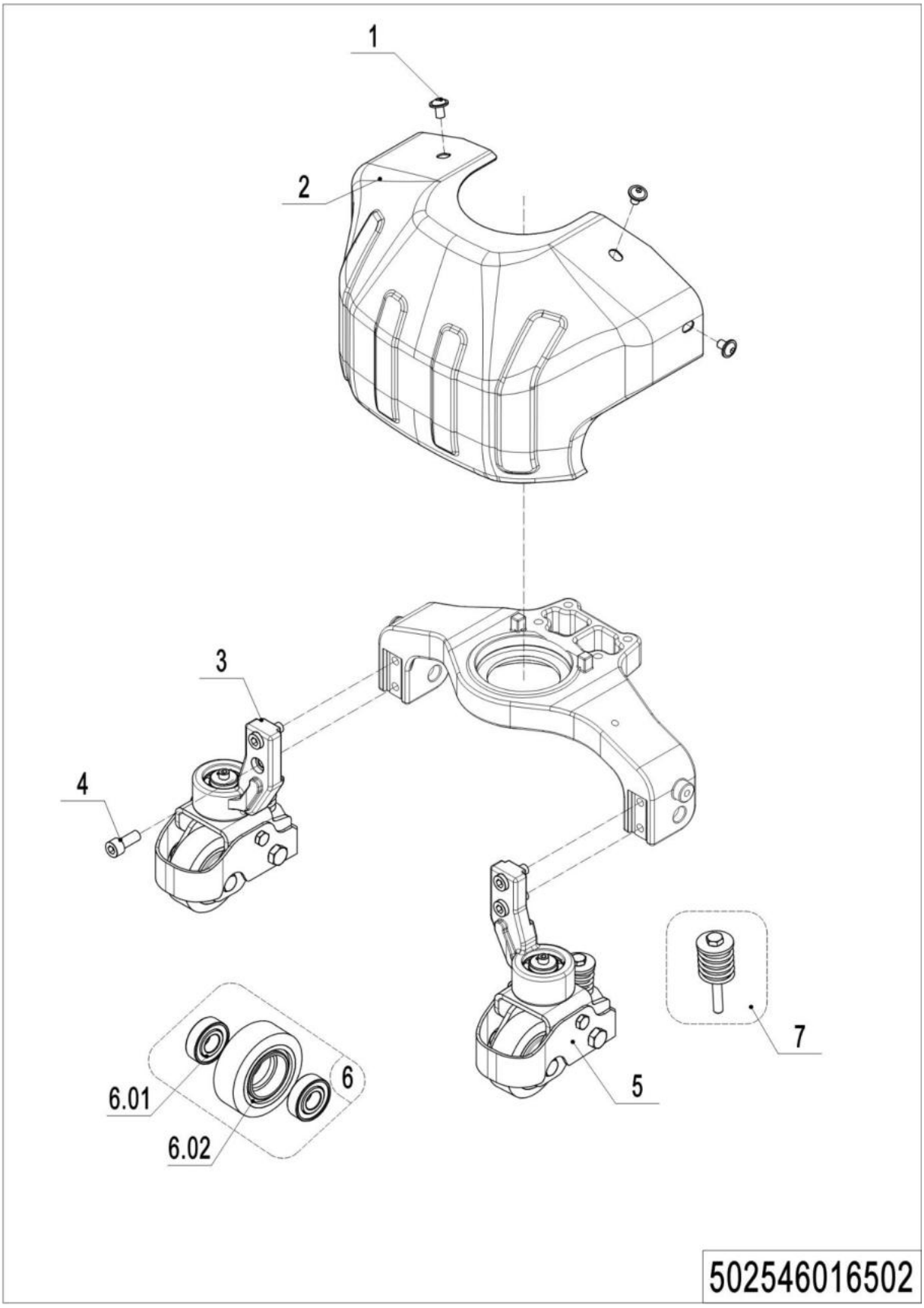

1= Supply as package. 2= Supply with constraints. 3= Phasing-out supply. 4= Supply as assembly. 5= Check other tables.

06 Caster（502546016502）

No.	Item Code	Mark	Item Description	Qty.	Substitute	Note
1	941100100001		Screw	4		
2	502513520003		Apron	1		
3	508016510005		Caster Assembly	1		
4	910200200076		Screw	4		
5	508016510002		Caster Assembly	1		
6	502398510015		Load Wheel Kit	2		
6.01	910700200018		Bearing	4		
6.02	940300300017		WheelΦ80x30	2		
7	508098510047		Spring Components	2		

Chapter 5: Electrical Parts

01 Wire Harness (502546033001)

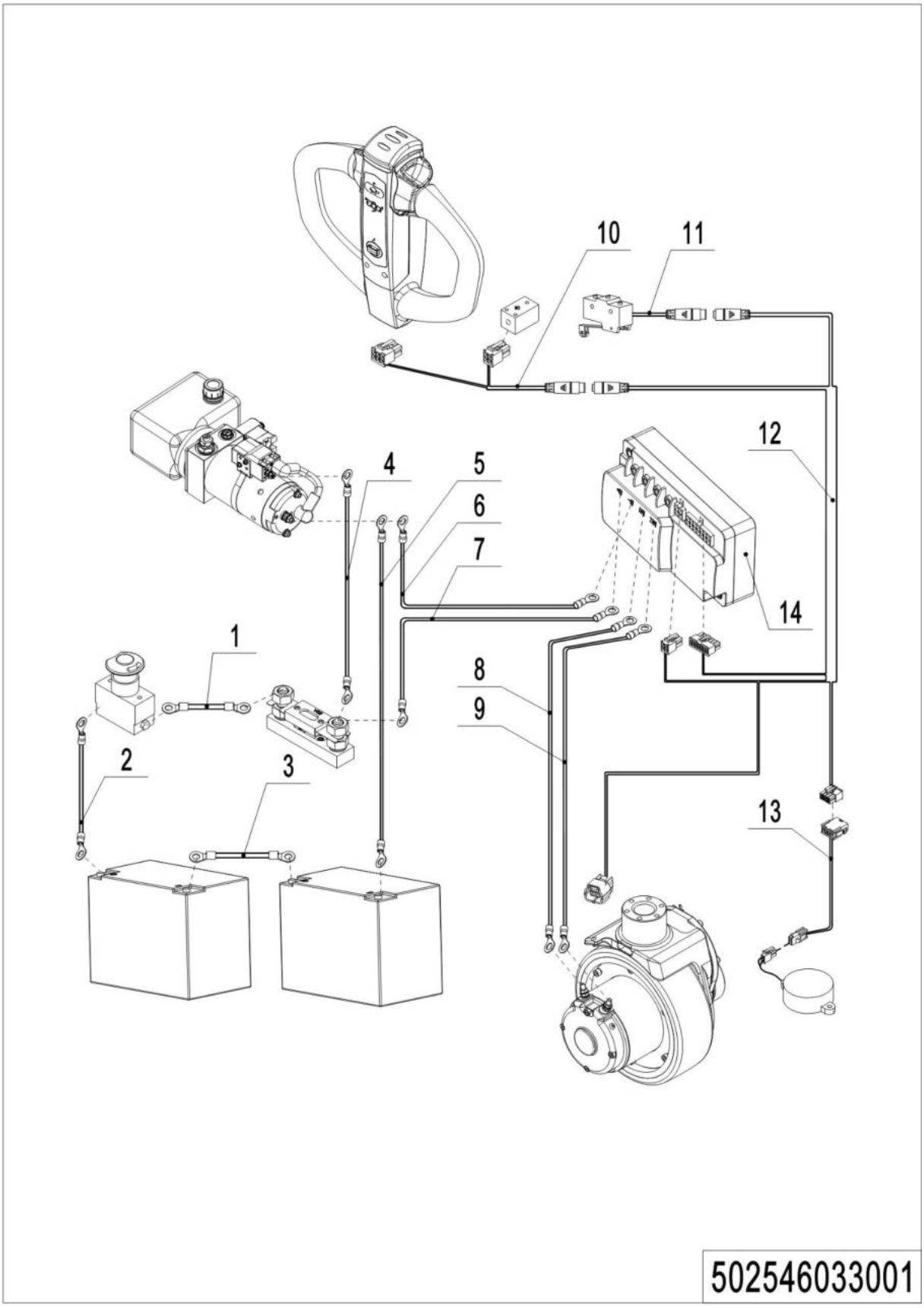

1= Supply as package. 2= Supply with constraints. 3= Phasing-out supply. 4= Supply as assembly. 5= Check other tables.

01 Wire Harness （502546033001）

No.	Item Code	Mark	Item Description	Qty.	Substitute	Note
1	502533010002		Cables	1		
2	920200100024		Emergency Button	1		
3	502533010004		Cables	1		
4	502533010005		Cables	1		
5	502533010003		Cables	1		
6	502533010006		Cables	1		
7	502533010007		Cables	1		
8	502533010008		Cables	1		
9	502533010010		Cables	1		
10	502533010011		Cables	1		
11	502533010012		Wiring Harness	1		
12	502533010013		Wiring Harness	1		
13	502533010009		Wiring Harness	1		
14	502533010001		Wiring Harness	1		
15	921400100129		Controller	1		

02 Wire Harness (502546033002)

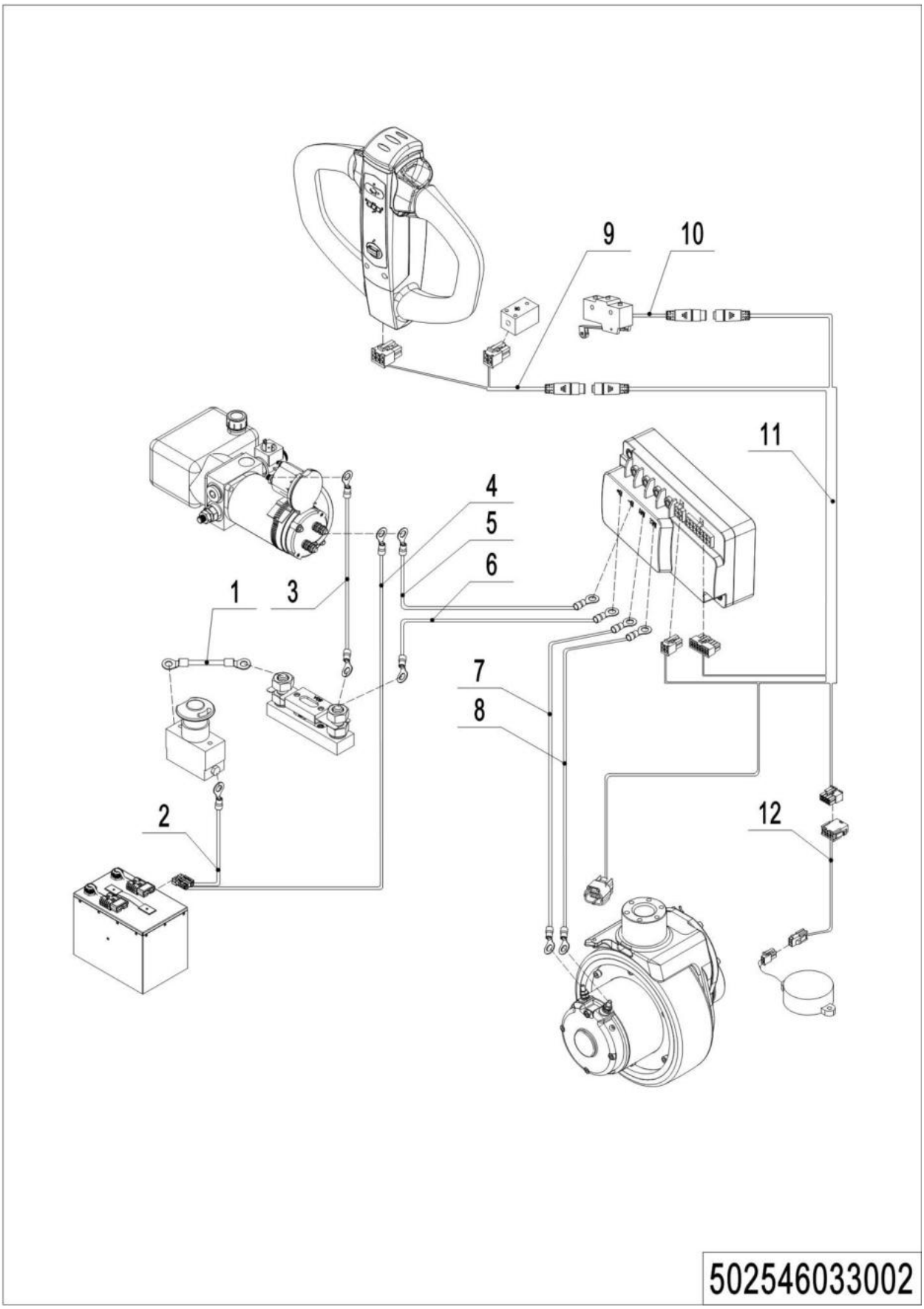

1= Supply as package. 2= Supply with constraints. 3= Phasing-out supply. 4= Supply as assembly. 5= Check other tables.

02 Wire Harness （502546033002）

No.	Item Code	Mark	Item Description	Qty.	Substitute	Note
1	502533010002		Cables	1		
2	920200100024		Emergency Button	1		
3	502533010024		Wire Harness	1		
4	502533010003		Cables	1		
5	502533010006		Cables	1		
6	502533010007		Cables	1		
7	502533010008		Cables	1		
8	502533010010		Cables	1		
9	502533010011		Cables	1		
10	502533010012		Wiring Harness	1		
11	502533010013		Wiring Harness	1		
12	502533010009		Wiring Harness	1		
13	502533010001		Wiring Harness	1		

03 Charger (502546036501)

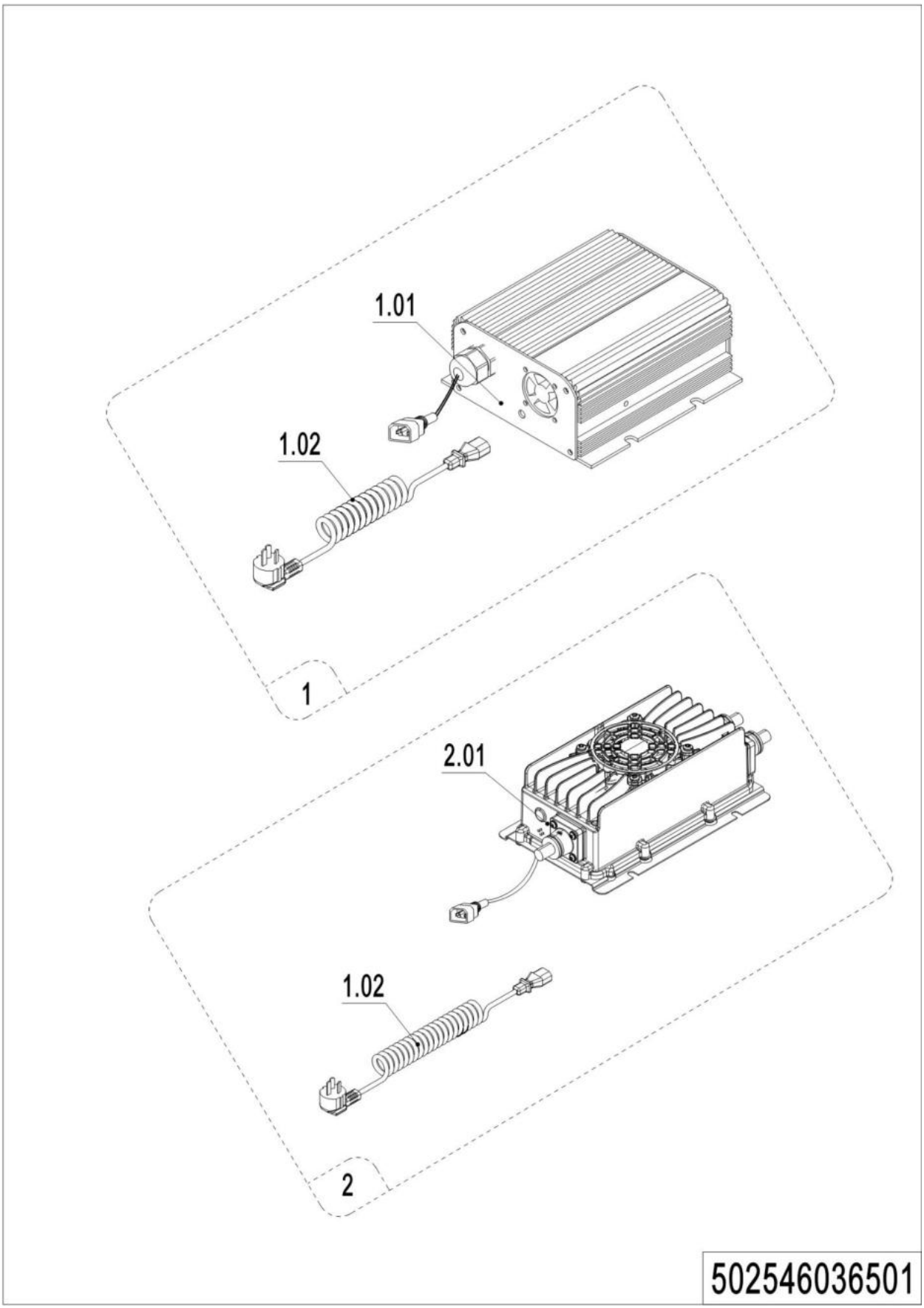

1= Supply as package. 2= Supply with constraints. 3= Phasing-out supply. 4= Supply as assembly. 5= Check other tables.

03 Charger (502546036501)

No.	Item Code	Mark	Item Description	Qty.	Substitute	Note
1.01	921000100080		Charger24V8A	1		
1.02	921500200008		Spring Cable (Asia)	1		
1.02	921500200004		Spring Cable(ENG)	1		
1.02	921500200002		Spring Cable(USA)	1		
1.02	921500200005		Spring Cable(EU)	1		
1.02	921500200003		Spring Cable(AUS)	1		
1.02	921500200006		Spring Cable(ITY)	1		
1.02	921500200007		Spring Cable(SWD)	1		
1.02	921500200029		Spring Cable(ISR)	1		
1.02	921500200061		Spring Cable(BRA)	1		
1	502536510001		Charger24V8A(Asia)	1		
1	502536510002		Charger24V8A(ENG)	1		
1	502536510003		Charger24V8A(US)	1		
1	502536510004		Charger24V8A(EU)	1		
1	502536510005		Charger24V8A(AUS)	1		
1	502536510006		Charger24V8A(ITA)	1		
1	502536510007		Charger24V8A(SWE)	1		
1	502536510008		Charger24V8A(ISR)	1		
1	502536510009		Charger24V8A(BRA)	1		
2.01	921000100085		Li Battery24V20Ah	1		
2.01	921000100086		Li Battery24V18Ah	1		
2	502536510022		charger24V18A(Aisa)	1		
2	502536510023		charger24V18A(ENG)	1		
2	502536510024		charger24V18A(US)	1		
2	502536510025		charger24V18A(EU)	1		
2	502536510026		charger24V18A(AUS)	1		
2	502536510027		charger24V18A(ITA)	1		
2	502536510028		charger24V18A(SWE)	1		
2	502536510029		charger24V18A(ISR)	1		
2	502536510030		charger24V18A(BRA)	1		
2	502536510031		charger24V18A(ARG)	1		

03 Charger (502546036501) Continue

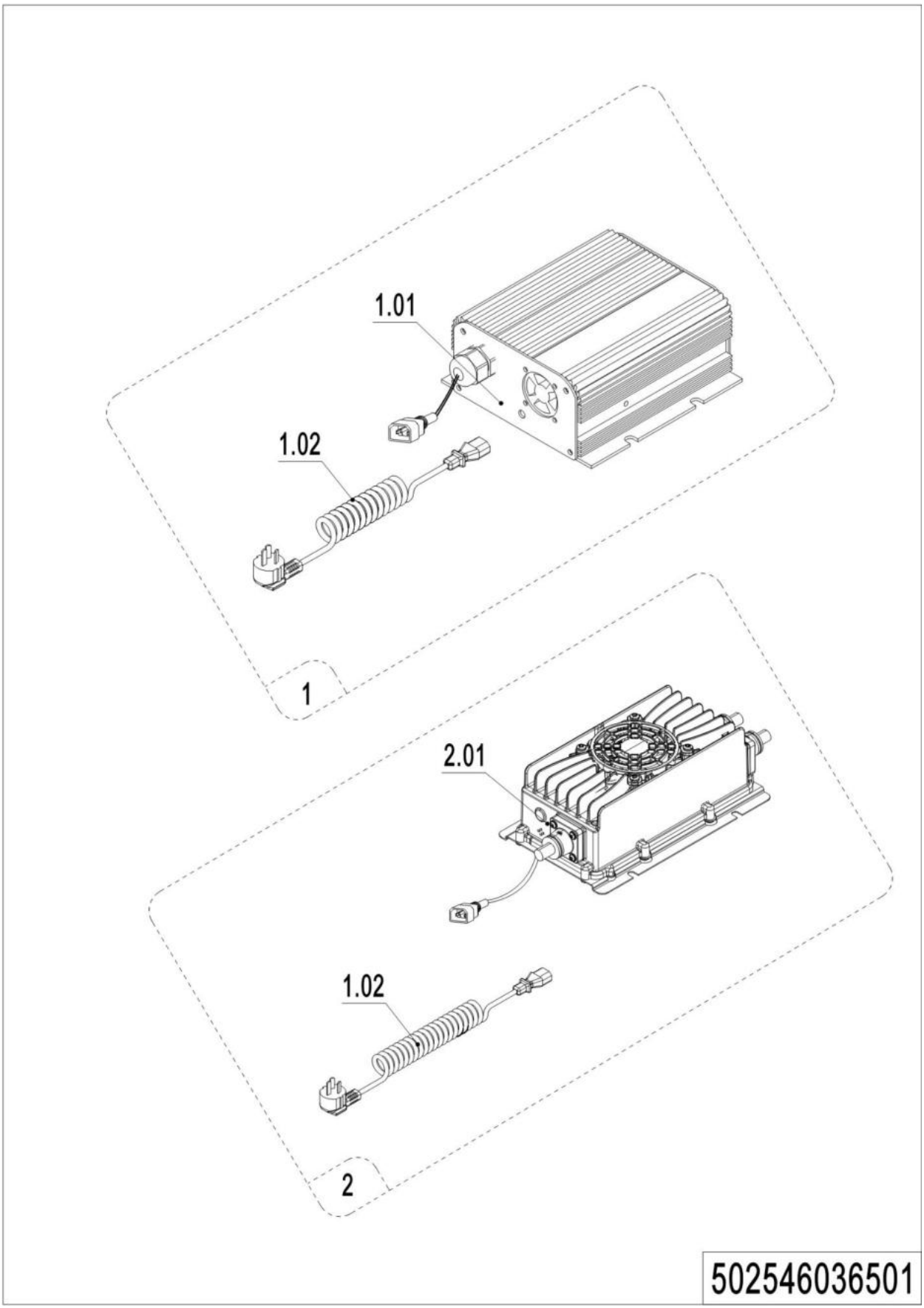

1= Supply as package. 2= Supply with constraints. 3= Phasing-out supply. 4= Supply as assembly. 5= Check other tables.

03 Charger（502546036501）Continue

No.	Item Code	Mark	Item Description	Qty.	Substitute	Note
2	502536510032		charger24V20A(Aisa)	1		

1= Supply as package. 2= Supply with constraints. 3= Phasing-out supply. 4= Supply as assembly. 5= Check other tables.

04 Traction Battery (502546037001)

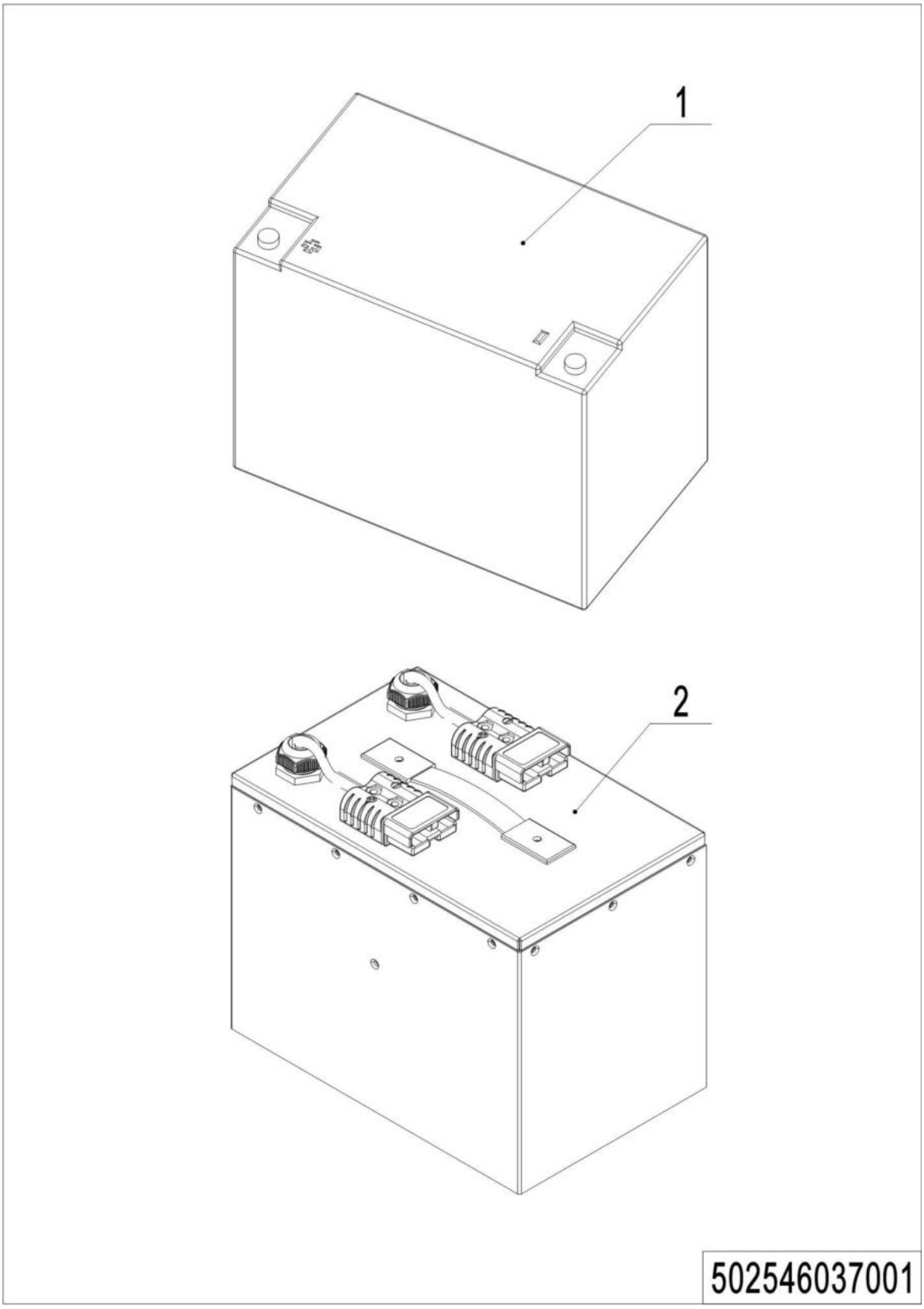

1= Supply as package. 2= Supply with constraints. 3= Phasing-out supply. 4= Supply as assembly. 5= Check other tables.

04 Traction Battery（502546037001）

No.	Item Code	Mark	Item Description	Qty.	Substitute	Note
1	920600100194		Battery12V65Ah	2		Lead Acid
1	920600100103		Battery12V64Ah	2		Lead Acid
1	920600100001		Battery12V85Ah	2		Lead Acid
2	920600100376		Li Battery24V40Ah	1		Li Battery
2	920600100370		Li Battery24V60Ah	1		Li Battery

Chapter 6: Others

01 Labels and Decals-EU (502546047001)

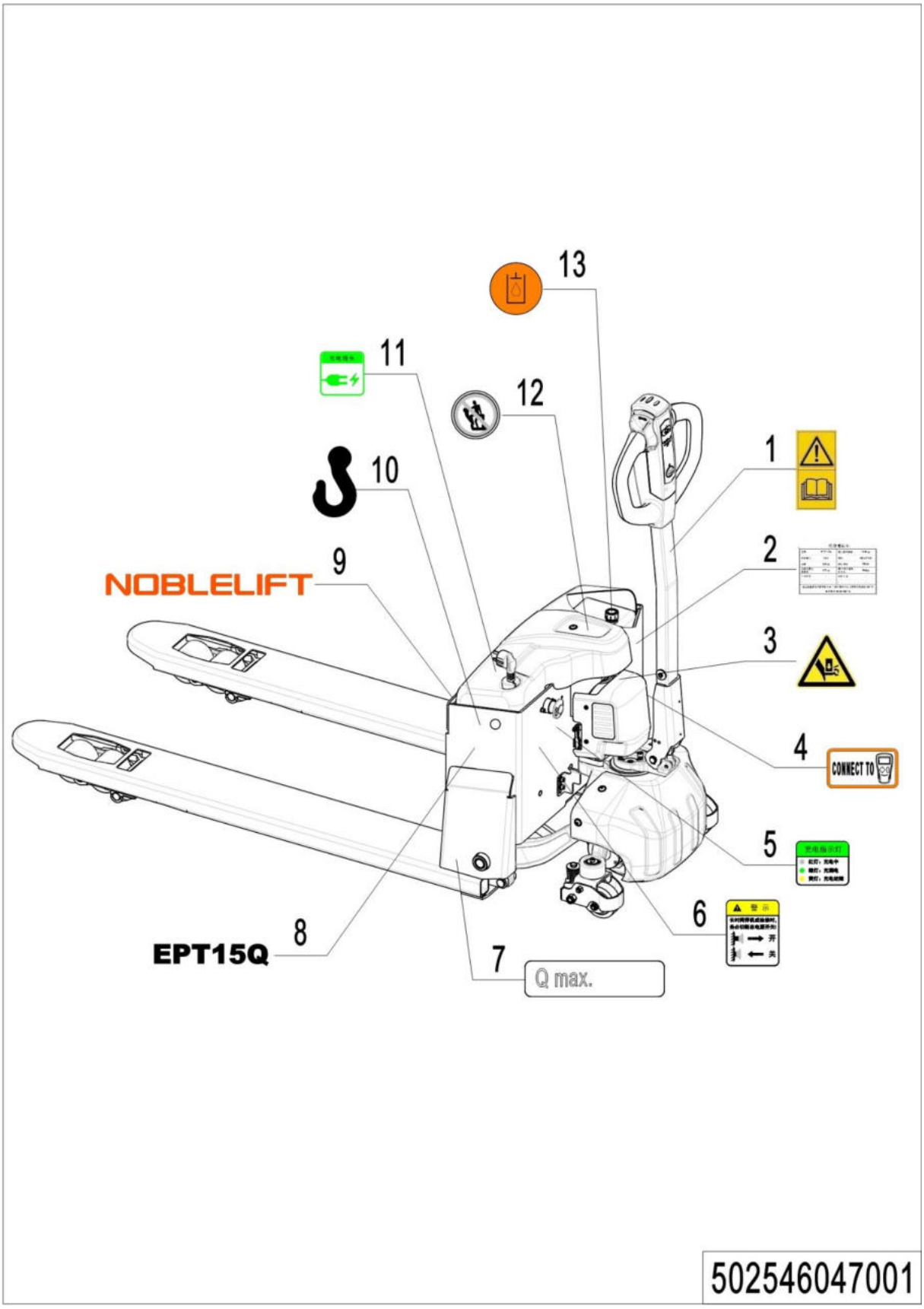

1= Supply as package. 2= Supply with constraints. 3= Phasing-out supply. 4= Supply as assembly. 5= Check other tables.

01 Labels and Decals-EU （502546047001）

No.	Item Code	Mark	Item Description	Qty.	Substitute	Note
1	941200300002		Label	1		
2	502547520000		Label	1		
3	508047020007		Label	1		
4	941200300019		Label	1		
5	502547020003		Label	1		
6	502547020004		Label	1		
7	941200200009		Label	1		
8	502547020002		Label	2		
9	941200500003		Label	1		
10	941200300008		Label	2		
11	502547020005		Label	1		
12	941200100003		Label	1		
13	941200300003		Label	1		

02 Labels and Decals-US (502546047002)

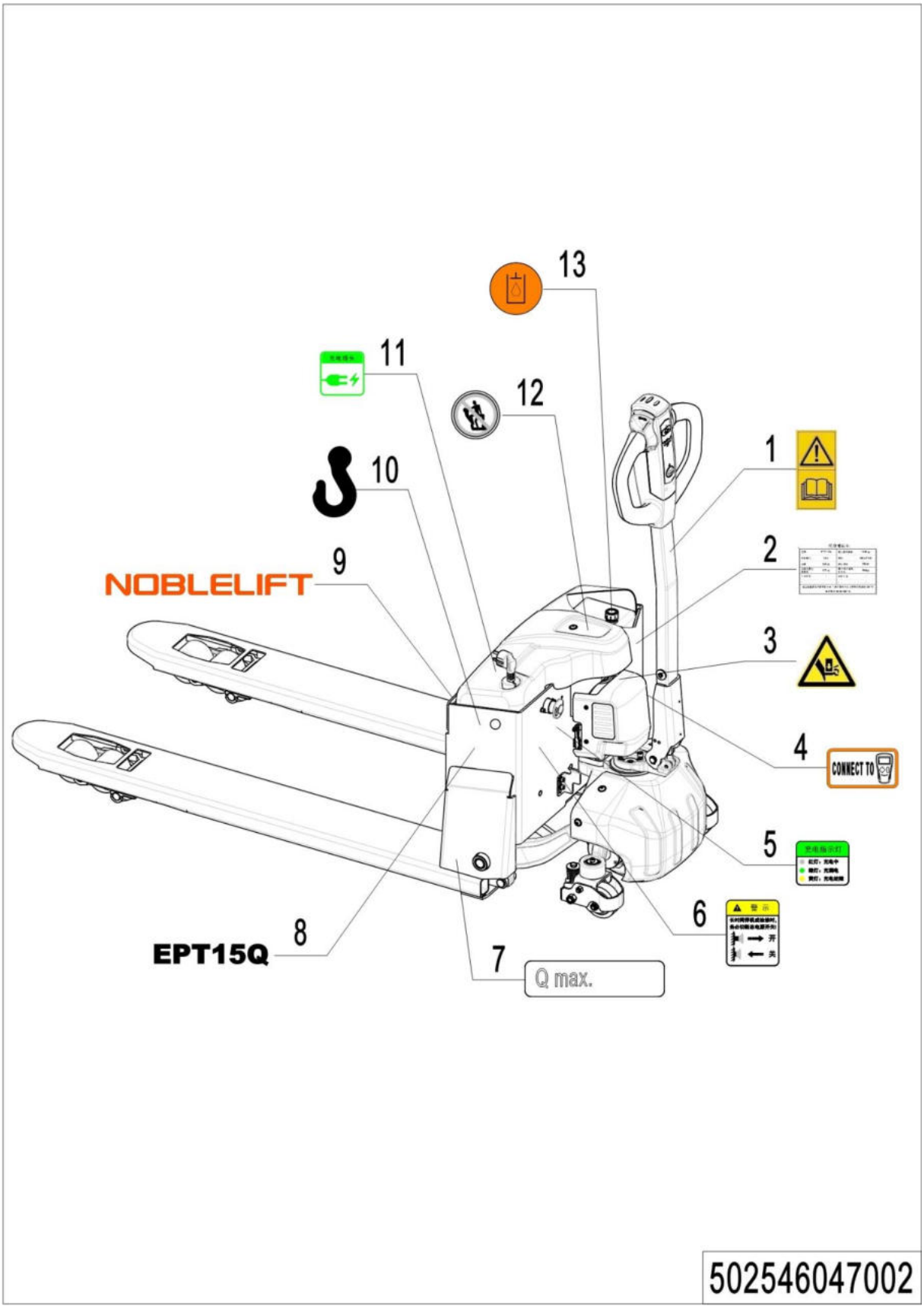

1= Supply as package. 2= Supply with constraints. 3= Phasing-out supply. 4= Supply as assembly. 5= Check other tables.

02 Labels and Decals-US （502546047002）

No.	Item Code	Mark	Item Description	Qty.	Substitute	Note
1	941200300002		Label	1		
2	502547520000		Label	1		
3	508047020007		Label	1		
4	941200300019		Label	1		
5	502547020006		Label	1		
6	502547020007		Label	1		
7	941200200009		Label	1		
8	502547020002		Label	2		
9	941200500003		Label	1		
10	941200300008		Label	2		
11	502547020008		Label	1		
12	941200100003		Label	1		
13	941200300003		Label	1		

Appendix

01 Electrical Circuit Diagram (502546045501)

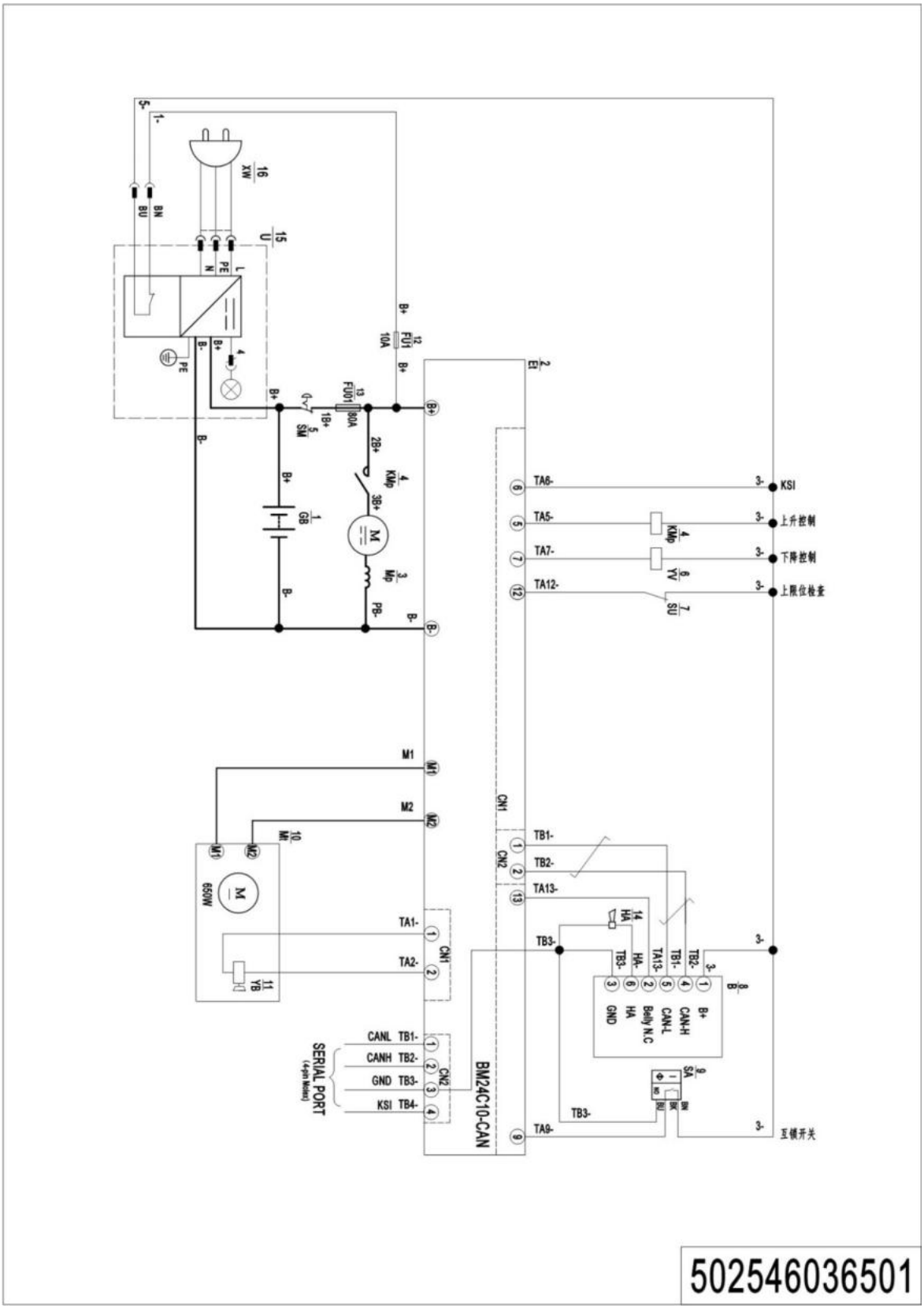

1= Supply as package. 2= Supply with constraints. 3= Phasing-out supply. 4= Supply as assembly. 5= Check other tables.

02 Hydraulic Circuit Diagram (508046045502)

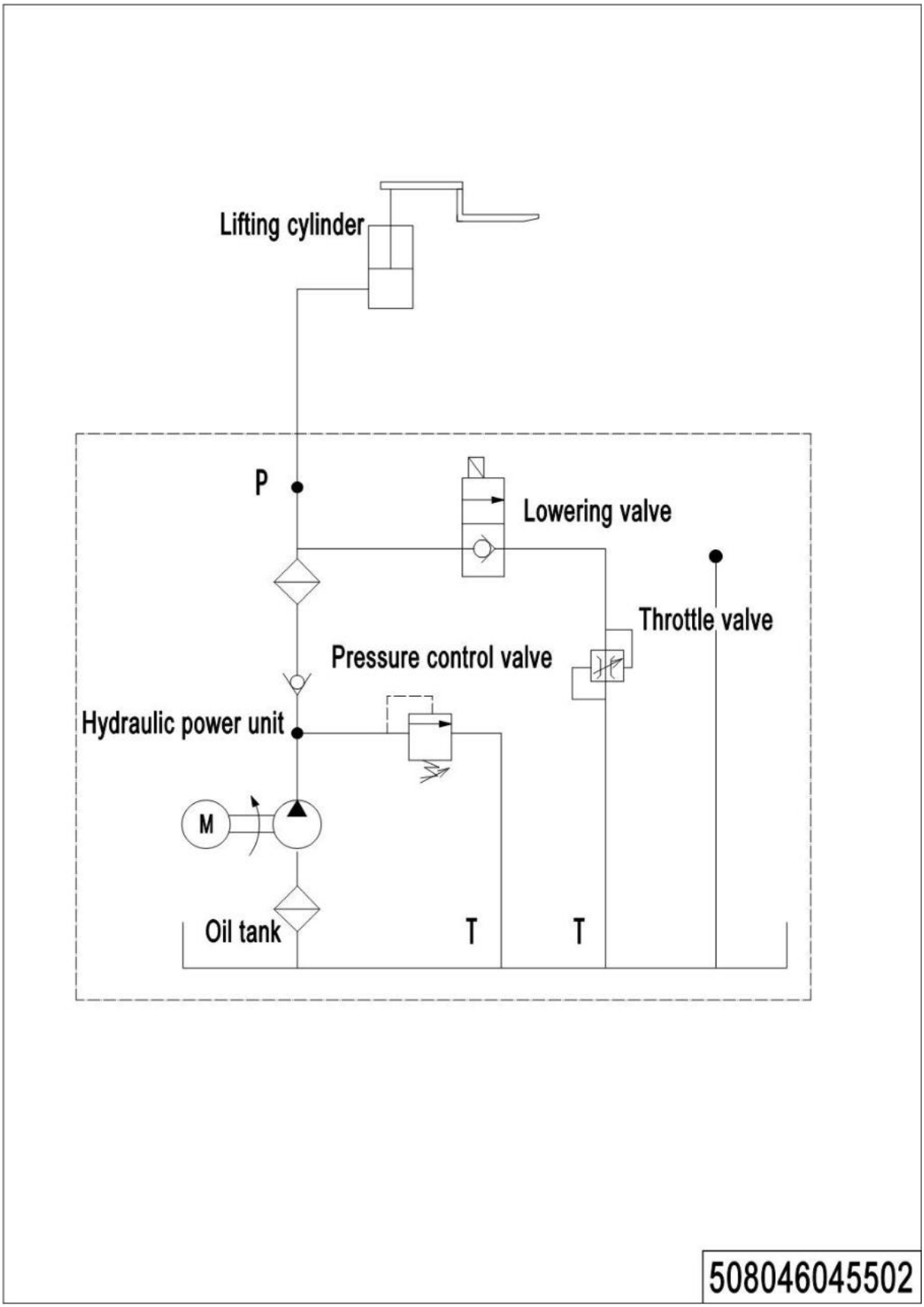

1= Supply as package. 2= Supply with constraints. 3= Phasing-out supply. 4= Supply as assembly. 5= Check other tables.

03 Consumable Parts List

No.	Item Code	Item Description	Qty.	Chapter/ Section/ Number
1	910700200072	Bearing	1	Chapter 1/01/3
2	910700600044	Bearing	1	Chapter 1/01/5
3	508598510005	Seal Kit	1	Chapter 2/01/19.01
4	940500100097	Bushing	2	Chapter 3/01/13 Chapter 3/02/13
5	940500100083	Bushing	8	Chapter 3/01/15 Chapter 3/02/15
6	920100100004	Fuse	1	Chapter 3/01/23 Chapter 3/02/23
7	940500200001	Bushing	1	Chapter 4/01/6
8	508098510084	Gas Spring Kit	1	Chapter 4/01/10
8	940500200038	Bushing	4	Chapter 4/03/2.01
9	910700200019	Bearing	8/4	Chapter 4/03/2.04
10	940300300047	Wheel Φ80x70	4	Chapter 4/03/2.05
11	940500100088	Bushing	4	Chapter 4/03/2.08
12	940300300023	Wheel Φ80x93	2	Chapter 4/03/3.01
13	910700200018	Bearing	4	Chapter 4/05/6.01
14	940300300017	Wheel Φ80x30	2	Chapter 4/05/6.02

1= Supply as package. 2= Supply with constraints. 3= Phasing-out supply. 4= Supply as assembly. 5= Check other tables.

1= Supply as package. 2= Supply with constraints. 3= Phasing-out supply. 4= Supply as assembly. 5= Check other tables.