NOBLELIFT

INSTRUCTION MANUAL

Reach Truck

RT15DP/RT15SP/RT20SP

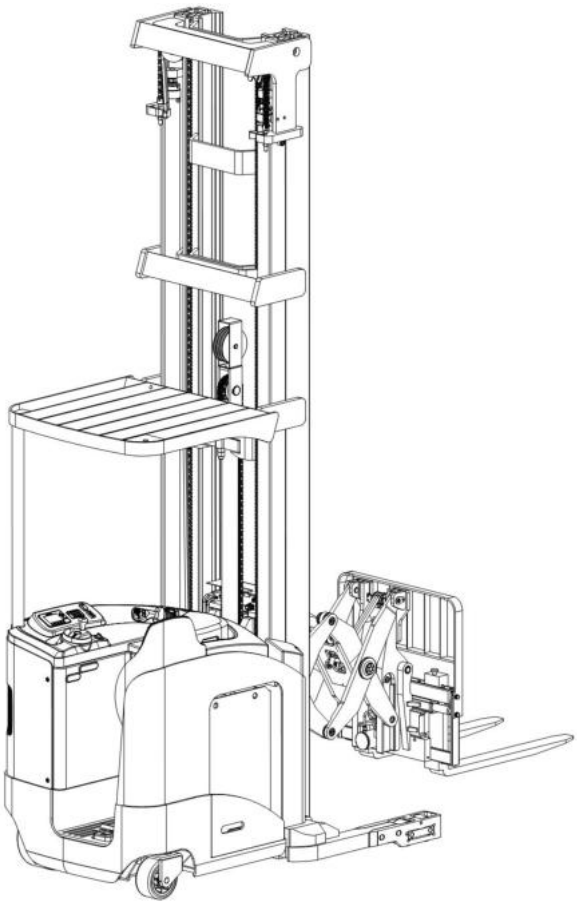

WARNING

Do not use the reach truck before reading and understanding these operating instructions.

NOTE:

- **Please check the designation of your present type at the last page of this document as well as on the ID-plate.**
- **Keep it for future reference.**

This truck can only be used in the factory, tourist attractions and amusement areas.

Version 08/2023

RTXXDP/SP-SMS-001-EN

FOREWORD

Before operating the reach truck, read this ORIGINAL INSTRUCTION MANUIAL carefully and understand the application of the truck completely. Improper operation could create danger.

This manual describes the usage of different electric reach trucks. When operating and servicing the truck, make sure, that it applies to your type.

Keep this manual for future reference. If this or the warning/ caution labels are damaged or lost, please contact your local dealer for replacement.

This truck complies with the requirements according to EN 3691-1 (Industrial trucks- safety requirements and verification, part 1), EN 12895 (Industrial trucks- electromagnetic compatibility), EN 12053 (Safety of industrial trucks- test methods for measuring noise emissions), EN 1175-1 (Industrial truck safety – electrical requirements), assumed the truck is used according to the described purpose.
The noise level for this machine is 68 dB(A) according to EN 12053.

ATTENTION:

- Environmentally hazardous waste, such as batteries, oil and electronics, will have a negative effect on the environment, or health, if handled incorrectly.

- The waste packages should be sorted and put into solid dustbins according to the materials and be collected disposal by local special environment protection bureau. To avoid pollution, it’s forbidden to throw away the wastes randomly.

- To avoid leaking during the use of the products, the user should prepare some absorbable materials (scraps of wooden or dry duster cloth) to absorb the leaking oil in time. To avoid second pollution to the environment, the used absorbable materials should be handed in to special departments in terms of local authorities.

- Our products are subject to ongoing developments. Because this manual is only for operating /servicing the reach truck, therefore please have understanding, that there is no guarantee out of particular features out of this manual.

NOTE: In this manual, the left symbol indicates warning and danger. Failure to comply with this instruction will result in severe injury and even death.

Copyright

The copyright remains with the company, mentioned on the CE- certificate at the end of this document.

TABLE OF CONTENTS

1. CORRECT APPLICATION 3
2. TRUCK DESCRIPTION 4
a. Overview of the main components 4
b. Main technical data 14
c. Description of the safety devices and warning labels (Europe and other, excepting USA) 19
d. Location of VIN (Vehicle Identification Number) 21
e. Identification plate (ID-plate) 21
3. WARNINGS, RESIDUAL RISK AND SAFETY INSTRUCTIONS 22
4. COMMISSIONING, TRANSPORTING, DECOMMISSIONING 23
a. Commissioning 23
b. Lifting by crane/ transporting 24
c. Storage/ Decommisioning 25
5. REGULAR INSPECTION 26
6. OPERATION INSTRUCTIONS 27
a. Overview of the control devices 27
b. Power on the truck 27
c. Travelling 28
d. Steering 28
e. Braking 28
f. Residual capacity diagram 29
g. Lifting 29
h. Lowering 29
i. Fork reach (extend/retract) control 29
j. Fork sideshift (right/left) control 30
k. Fork tilt (up/down) control 30
l. Malfunctions 30
m. Emergency 30
7. BATTERY CHANGES AND REPLACEMENT 31
a. Battery replacement 32
b. Battery indicator and alarm 32
c. Charging 33
8. REGULAR MAINTENANCE 34
a. Maintenance checklist 34
b. Lubricating points 36
c. Check and refill hydraulic oil 36
d. Check the electrical fuses 37
9. TROUBLE SHOOTING 38
10. WIRING/CIRCUIT DIAGRAM 39
11. HYDRAULIC DIAGRAM 41
12. DIAGNOSTICS AND TROUBLESHOOTING 42
13. DECLARATION OF CONFORMITY (VALID FOR SALE IN EU) 73

1. CORRECT APPLICATION

To ensure the safety of personal and equipment, drivers shall observe the following precautions:

1. Only operator who has been trained and has the license is allowed to operate the truck;
2. The truck is applicable for hard and flat indoors floor;
3. Check the control and alarm devices before driving. Operate the truck until it is repaired if any damage or defects are found.
4. During load handling, the load shall not exceed the specified capacity. Both forks shall go under the load, and the load shall be placed evenly on the forks. Unbalanced loading and picking up objects with single fork are not allowed;
5. Start, steer, drive, brake and stop slowly and smoothly. Slow down when steering on wet or smooth floors;
6. When driving the truck with load, lower the load as low as possible and the forks should be tilted backwards;
7. Be careful when driving on the ramp: drive forwards when going uphill, drive backwards when going downhill, avoid improper operation when driving uphill or downhill;
8. Pay attention to pedestrians, obstacles and potholes, and the clearance above the truck during operating the truck;
9. Standing on forks or on the truck is not allowed;
10. Standing under or walking under the lifted part of the truck is not allowed;
11. Only operate the truck from the driver's position;
12. Do not handle unsecured or loosely packed goods, and handle the large goods with care;
13. When operating in racks, drive the truck slowly and straightly in and out. When the fork is not completely out of the aisle, the steering is not allowed to avoid collision.
14. For high-lift truck, the mast should be tilted backwards as far as possible. For loading and unloading operation, the mast should be tilted forwards and backwards within the minimum range.
15. When the truck malfunctions, immediately stop operation and present this warning.
16. When leaving the truck, lower the forks to the ground, park the truck on the level ground, turn off the power and remove the key.

It is only allowed to operate this battery powered reach truck according to this instruction manual.

The capacity is indicated on the capacity sticker as well on the identification plate. The operator has to pay attention to these warning signs and safety instructions.
Operating lighting must be minimum 50 Lux.

<u>Modification</u>

No modifications or alterations to this pallet truck which may affect, for example, capacity, stability or safety requirements of the truck, shall be made without the prior written approval of the original truck manufacturer, its authorized representative, or a successor thereof. This includes changes affecting, for example braking, steering, visibility and the addition of removable attachments. When the manufacturer or its successor approve a modification or alteration, they shall also make and approve appropriate changes to capacity plate, decals, tags and operation and maintenance handbooks.

Only in the event that the truck manufacturer is no longer in business and there is no successor in the interest to the business, may the user arrange for a modification or alteration to a powered industrial truck, provided, however, that the user:
a) arranges for the modification or alteration to be designed, tested and implemented by an engineer(s) expert in industrial trucks and their safety,
b) maintains a permanent record of the design, test(s) and implementation of the modification or alteration,
c) approves and makes appropriate changes to the capacity plate(s), decals, tags and instruction handbook, and
d) affixes a permanent and readily visible label to the truck stating the manner in which the truck has been modified or altered, together with the date of the modification or alteration and the name and address of the organization that accomplished those tasks.

Failure to comply with the operating instructions shall invalidate the warranty.

2. TRUCK DESCRIPTION

a. Overview of the main components

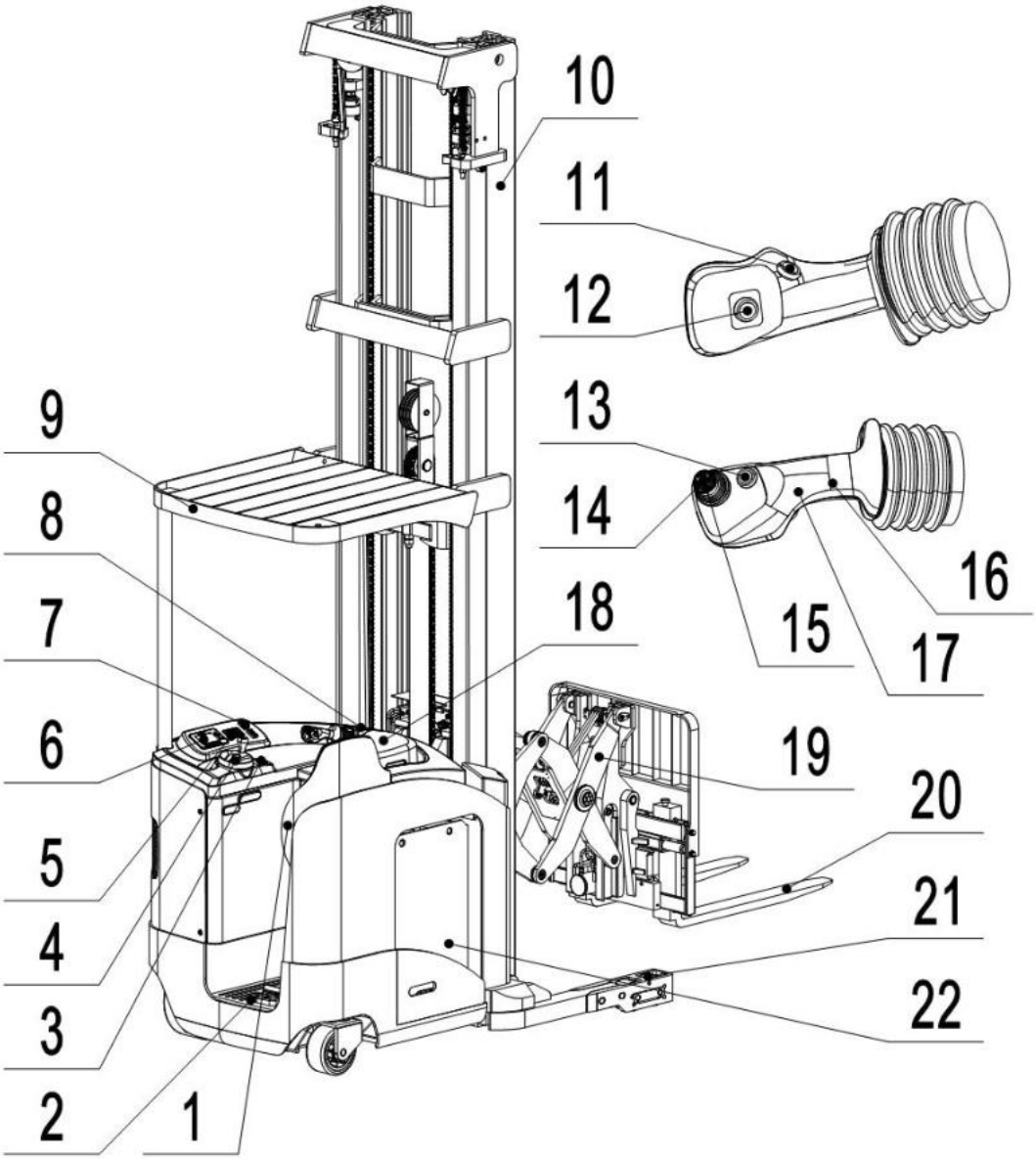

Fig. 1: Overview main components

1. Seat assembly
2. Safety pedal
3. Key switch
4. Steering wheel
5. Instrument
6. Display
7. Lamp switch
8. Emergency switch
9. Overhead guard
10. Mast
11. Horn button
12. Fork sideshift (right/left) control
13. Fork leveling assist
14. Fork reach (extend/retract) control
15. Fork tilt (up/down) control
16. Mast reach (extend/retract) control
17. Mast lifting control
18. Elbow rest
19. Pantograph
20. Fork
21. Load roller
22. Battery

b. Main technical data

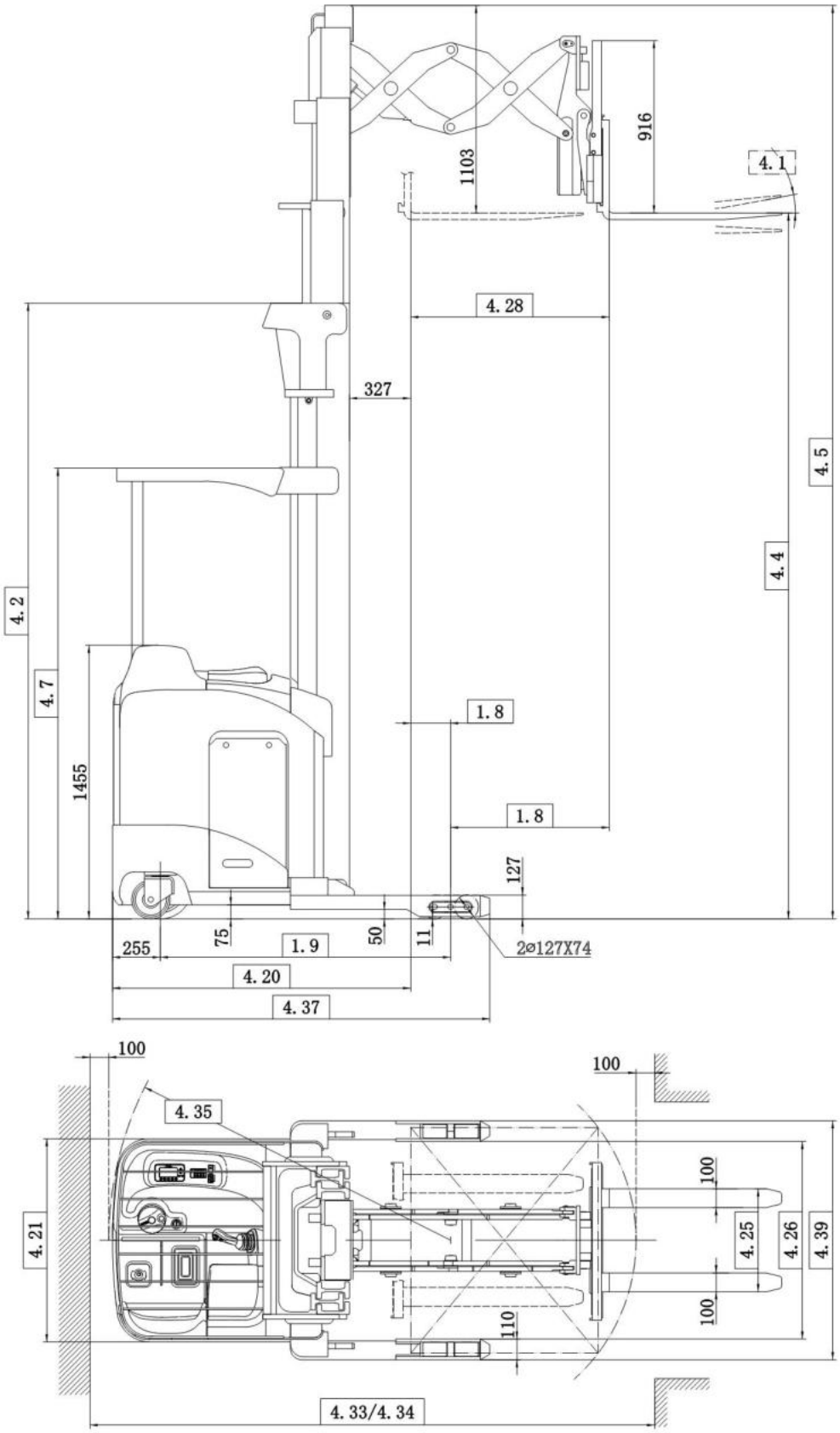

Fig. 2: Structure schematic drawing

Table 1: Main technical data for standard version

Type sheet for industrial truck acc. to VDI 2198						
Distinguishing mark	1.2	Manufacturer's type designation		RT15DP	RT15SP	RT20SP
	1.3	Drive: electric (battery type, mains, ...), diesel, petrol, fuel gas		Battery		
	1.4	Operator type: hand, pedestrian, standing, seated, order-picker		Standing		
	1.5	Rated capacity/ rated load	Q (t)	1.5	1.5	2.0
	1.6	Load centre distance	c (mm)	600	600	600
	1.8	Load distance, centre of drive axle to fork	x (mm)	See Attached Table 1		
	1.9	Wheelbase	y (mm)	See Attached Table 1		
Weight	2.1	Service weight (with battery)	kg	See Attached Table 2		
Tyres/ Chassis	3.1	Tires		Polyurethane wheels (PU)		
	3.2	Tire size, front	∅ x w (mm)	∅343×140	∅343×140	∅343×140
	3.3	Tire size, rear	∅ x w (mm)	∅127×74	∅127×74	∅127×74
	3.4	Additional wheels (dimensions)	∅ x w (mm)	∅205×102	∅205×102	∅205×102
	3.5	Wheels, number front/ rear(x=driven wheels)		1x, 4 / 1	1x, 4 / 1	1x, 4 / 1
	3.7	Tread, rear	b_{11} (mm)	1170	1170	1170
Dimensions	4.1	Tilt of mast/fork carriage forward/backward	α / β (°)	3°/-4°	3°/-4°	3°/-4°
	4.2	Height, mast lowered	h_1 (mm)	See Attached Table 3		
	4.3	Free lift	h_2 (mm)	See Attached Table 3		
	4.4	Lift	h_3 (mm)	See Attached Table 3		
	4.5	Height, mast extended	h_4 (mm)	See Attached Table 3		
	4.7	Height of overhead guard (cabin)	h_6 (mm)	See Attached Table 3		
	4.20	Length to face of forks	l_2 (mm)	See Attached Table 1		
	4.21	Overall width	b_1 (mm)	1100	1100	1100
	4.22	Fork dimensions DIN ISO 2331	s/ e/ l (mm)	35/100/1070	40/100/1070	40/100/1070
	4.25	Fork spread (min./max.)	b_5 (mm)	200/760	220/760	200/760
	4.28	Reach distance	l_4 (mm)	1060	570	570
	4.31	Ground clearance, laden, below mast	m_1 (mm)	50	50	50
	4.33	Aisle width for pallets 1000×1200 crossways	A_{st} (mm)	See Attached Table 1		

	4.34	Aisle width for pallets 800×1200 lengthways	A_{st} (mm)	See Attached Table 1		
	4.35	Turning radius	W_a (mm)	See Attached Table 1		
	4.37	Length across wheel arms	l_7 (mm)	See Attached Table 1		
Performance	5.1	Travel speed, laden/ unladen	km/h	9/9.5	9/9.5	9/9.5
	5.2	Lift speed, laden/ unladen	m/s	0.35/0.45	0.35/0.45	0.32/0.45
	5.3	Lowering speed, laden/ unladen	m/s	0.45/0.45	0.45/0.45	0.35/0.40
	5.4	Reaching speed, laden/ unladen	m/s	0.13/0.13	0.13/0.13	0.13/0.13
	5.8	Max. gradeability, laden/ unladen	%	5	5	5
	5.10	Service brake		<3.6	<3.6	<3.6
Electric-engine	6.1	Drive motor rating S2 60min	kW	5.5	5.5	5.5
	6.2	Lift motor rating at S3 15%	kW	11	11	11
	6.4	Battery voltage/ nominal capacity K_5	(V)/(Ah)	See Attached Table 1		
	6.5	Battery weight	kg	See Attached Table 1		
Addition data	8.1	Type of drive unit		Three-phase AC		
	8.2	Operating pressure	(bar)	180	180	200
	8.3	Oil volume	(l/min)	40	40	40
	8.4	Sound pressure level at driver's seat acc. to EN12053	dB(A)	68	68	68

Attached Table 1						
RT15DP						
	Battery acc. to DIN 43531/35/36 A, B, C, no		B	C	D	E
1.8	Load distance, centre of drive axle to fork	x (mm)	213/847	213/847	213/847	213/847
1.9	Wheelbase	y (mm)	1550	1550	1600	1650
4.20	Length to face of forks	l_2 (mm)	1590	1590	1640	1690
4.33	Aisle width for pallets 1000×1200 crossways	A_{st} (mm)	3010	3010	3030	3080
4.34	Aisle width for pallets 800×1200 lengthways	A_{st} (mm)	3095	3095	3145	3195
4.35	Turning radius	W_a (mm)	1825	1825	1875	1925
4.37	Length across wheel arms	l_7 (mm)	1985	1985	2035	2085
6.4	Battery voltage/ nominal capacity K_5	(V)/(Ah)	36V/600AH	36V/700AH	36V/800AH	36V/900AH
6.5	Battery weight	kg	780	900	1025	1140

RT15SP						
	Battery acc. to DIN 43531/35/36 A, B, C, no		B	C	D	E
1.8	Load distance, centre of drive axle to fork	x (mm)	305/265	305/265	305/265	305/265
1.9	Wheelbase	y (mm)	1550	1550	1600	1650
4.20	Length to face of forks	l_2 (mm)	1500	1500	1550	1600
4.33	Aisle width for pallets 1000×1200 crossways	A_{st} (mm)	3010	3010	3030	3080
4.34	Aisle width for pallets 800×1200 lengthways	A_{st} (mm)	2940	2940	2990	3040
4.35	Turning radius	W_a (mm)	1825	1825	1875	1925
4.37	Length across wheel arms	l_7 (mm)	1985	1985	2035	2085
6.4	Battery voltage/ nominal capacity K_5	(V)/(Ah)	36V/600AH	36V/700AH	36V/800AH	36V/900AH
6.5	Battery weight	kg	780	900	1025	1140

RT20SP						
	Battery acc. to DIN 43531/35/36 A, B, C, no		B	C	D	E
1.8	Load distance, centre of drive axle to fork	x (mm)	305/265	305/265	305/265	305/265
1.9	Wheelbase	y (mm)	1550	1550	1600	1650
4.20	Length to face of forks	l_2 (mm)	1500	1500	1550	1600
4.33	Aisle width for pallets 1000×1200 crossways	A_{st} (mm)	3010	3010	3030	3080
4.34	Aisle width for pallets 800×1200 lengthways	A_{st} (mm)	2940	2940	2990	3040
4.35	Turning radius	W_a (mm)	1825	1825	1875	1925
4.37	Length across wheel arms	l_7 (mm)	1985	1985	2035	2085
6.4	Battery voltage/ nominal capacity K_5	(V)/(Ah)	36V/600AH	36V/700AH	36V/800AH	36V/900AH
6.5	Battery weight	kg	780	900	1025	1140

Attached Table 2										
RT15DP										
2.1	Mast specification			4500	4920	6500	7500	8500	9500	10500
	Battery type	B	Truck weight	3994	4050	4240	N/A	N/A	N/A	N/A
		C		4114	4170	4360	4480	N/A	N/A	N/A
		D		4249	4305	4495	4615	4735	N/A	N/A
		E		4374	4430	4620	4740	4860	4980	5100
RT15SP										
2.1	Mast specification			4500	4920	6500	7500	8500	9500	10500
	Battery type	B	Truck weight	3550	3590	3750	N/A	N/A	N/A	N/A
		C		3670	3710	3870	3970	N/A	N/A	N/A
		D		3800	3840	4000	4100	4200	N/A	N/A
		E		3920	3960	4120	4220	4320	4420	4520
RT20SP										
	Mast specification			4500	4920	6500	7500	8500	9500	10500
2.1	Battery type	B	Truck weight	3894	3950	4140	N/A	N/A	N/A	N/A
		C		4014	4070	4260	4380	N/A	N/A	N/A
		D		4149	4205	4395	4515	4635	N/A	N/A
		E		4274	4330	4520	4640	4760	4880	5000

Attached Table 3					
RT15DP/RT15SP/RT20SP					
Mast	Lift h_3 mm	Free lift h_2 mm	Height, mast lowered h_1 mm	Height, mast extended h_4 (mm)	Height of overhead guard (cabin) h_6 mm
4500	4500	1340	2260	5420	2260
4920	4920	1495	2415	5840	2415
6500	6500	2020	2940	7420	2415
7500	7500	2354	3274	8420	2415
8500	8500	2686	3606	9420	2415
9500	9500	3020	3940	10420	2415
10500	10500	3354	4274	11420	2415

C. Description of the safety devices and warning labels (Europe and other, excepting USA)

Warning labels:

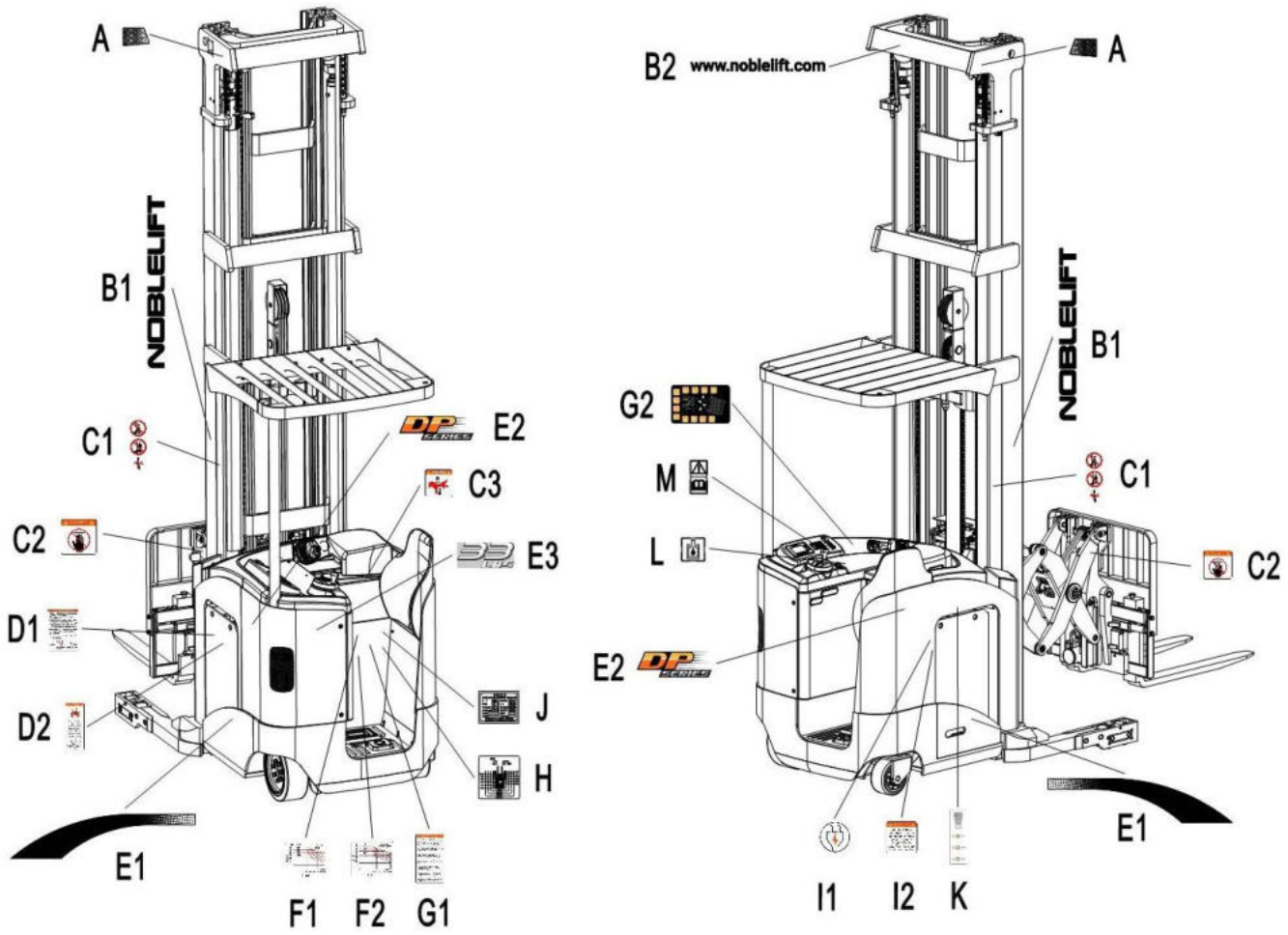

Fig. 3: Warning labels

A	Warning label: yellow speckled reflective film, to remind the highest point of the mast.
B1, B2	Trademark and company website.
C1, C2, C3	Do not stand under or on the fork. Do not put your hand into the fork. Mind your hand.
D1, D2	Warning label: Battery maintenance instructions.
E1, E2, E3	Auxiliary labels: decorative stickers, model sticker, rated capacity sticker.
F1, F2	Residual capacity sticker (Chinese/English).
G1, G2	Warning label: truck operation precautions, control handle operation diagram.
H	Schematic diagram of lubrication points.
I1, I2	Warning label: Charging port sign, sticker for charging precautions.
J	Identification plate (ID-plate): indicates the basic information of the truck, such as specifications, production date, serial number, etc.
K	Schematic diagram of electrical debugging port.
L	Sign oil filling point: fill hydraulic oil at this point.
M	Warning label: Read and follow the instructions manual.

Safety devices:

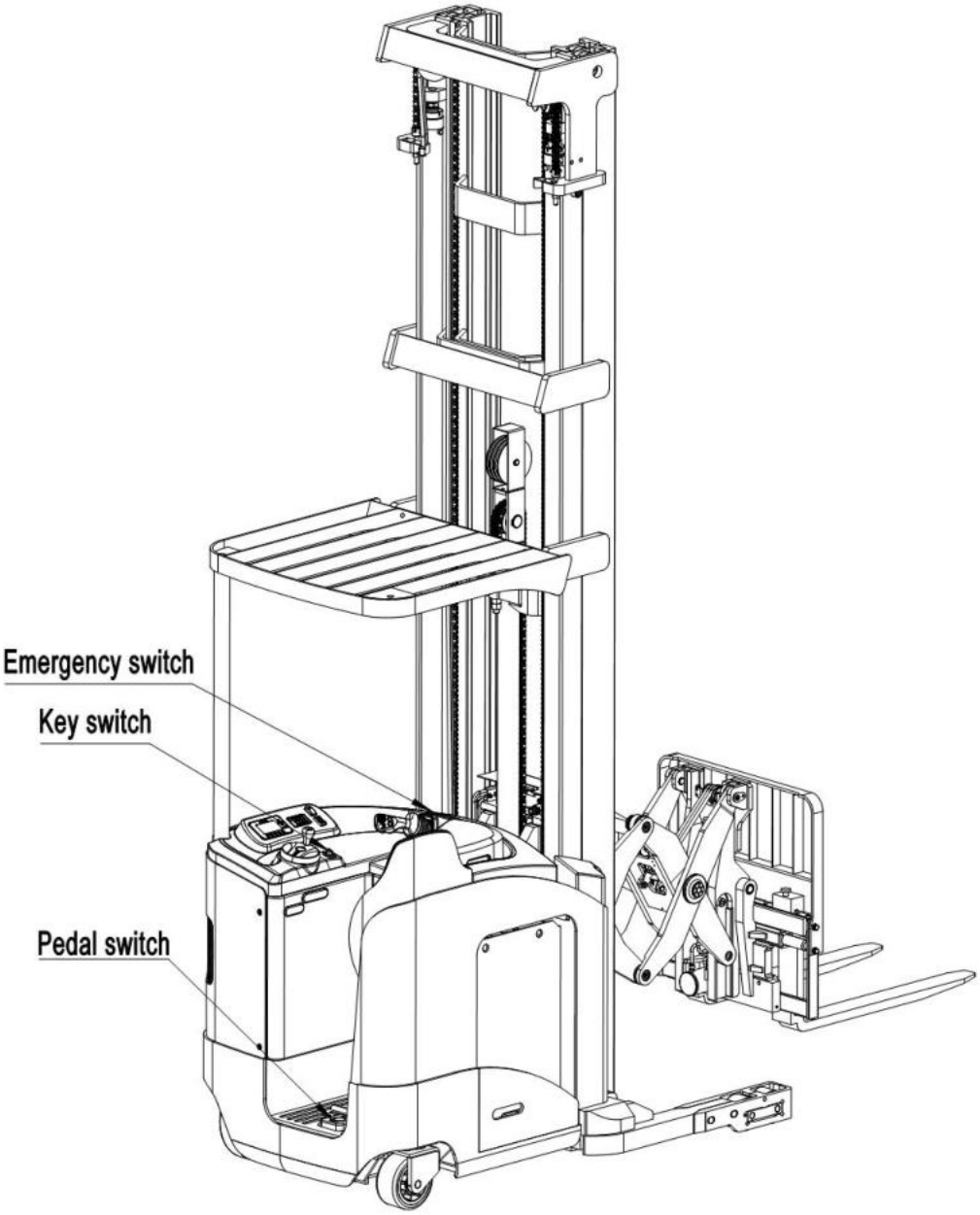

Fig. 4: Safety devices

Emergency switch: Press this button immediately to cut off the power supply when the truck is out of control, and all lifting-, lowering-, traveling-, shifting-functions will be stopped.
Key switch: To prevent against unauthorized access, turn the key counterclockwise and remove it.
Pedal switch: Operate the truck with left foot on the foot pedal switch, the left foot and right foot must be stepped on the left and right foot pedal switches respectively when driving the truck forwards and backwards, otherwise it will be failed.
Attention: Emergency button, key switch and hydraulic circuit explosion-proof valve are safety devices of the truck. Safety devices and labels for these devices must be kept in good condition, and please replace in time in case of damage or absence.

d. Location of VIN (Vehicle Identification Number)

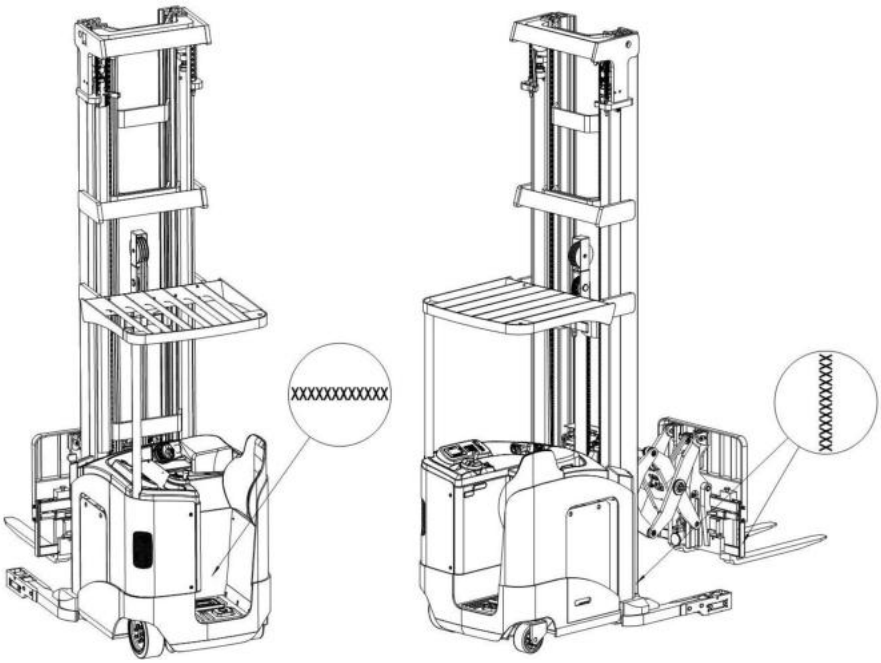

Fig. 5: Location of VIN (Vehicle Identification Number)

The VIN (Vehicle Identification Number) is located on the chassis, mast and forks of the truck, and the truck equipped with hook type fork also has the corresponding serial number of the chassis on the fork.

e. Identification plate (ID-plate)

1	Designation, type	7	Battery weight Min./Max in kg
2	Serial number	8	Nominal power in kW
3	Rated capacity in kg	9	Load center distance in mm
4	Supply voltage in V	10	Manufacturing date (MM/YY)
5	Net weight in kg (without battery)	11	Option
6	Name and address of manufacturer)		

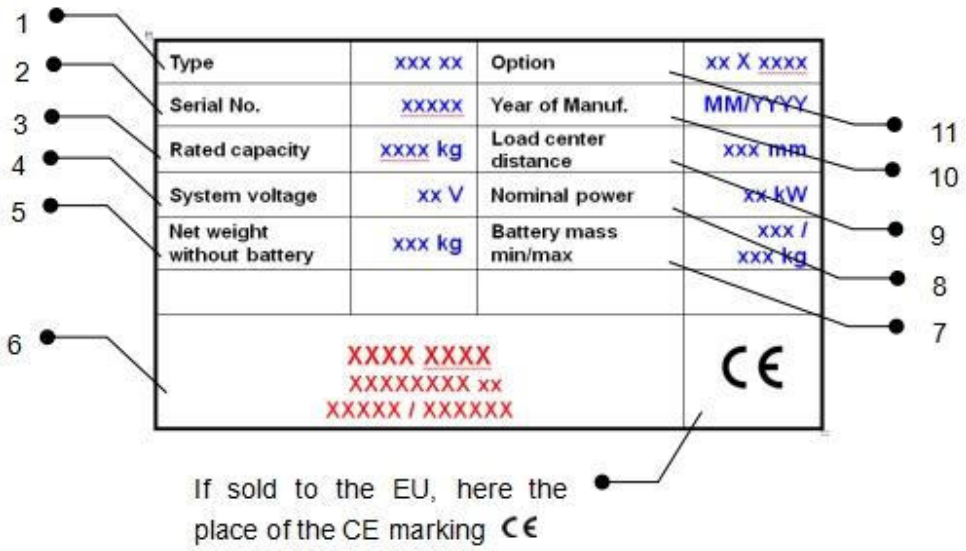

Fig. 6: Identification plate (ID-plate)

3. WARNINGS, RESIDUAL RISK AND SAFETY INSTRUCTIONS

DO NOT

- Use truck in environments with explosive gas, explosive dust or acid and alkali corrosion;
- Use truck in the environment with poor outdoor or ground conditions;
- Put feet or hands under or inside the lifting mechanism;
- Stand in front or behind the truck while driving or lifting/lowering;
- Overload, the load weight and lifting height must meet load curve requirements;
- Put foot outside the truck when driving which may cause injuries;
- Lift people may which may cause people falling down and severe injury suffering;
- Push or pull goods;
- Drive the truck on slopes;
- Use truck with unstable, loose or unbalanced load, gravity center must be between two forks;
- Operate the truck without authorization. Park the truck, turn off the power and pull out the key to prevent against unauthorized access;
- Do not make any truck modification without written consent from manufacturer;
- Wind force can affect the stability of a truck when lifting. In the case of wind force, do not lift the load if there is any influence to the stability.

Watch difference in floor levels when driving. Load could fall down or the truck could get uncontrollable. Keep watching the condition of load. Stop operating the truck if load becomes unstable. Brake the truck and activate the emergency button by pushing when sliding load on or off the truck. If the truck has any malfunctions, follow chapter 8.

- The truck is intended to be used on hard and flat ground indoors whose roughness should be within 1cm/m2;
- The operator should hold driving license and have been trained;
- When operating the truck, the operator has to wear safety shoes.
- The truck is intended to be used with ambient temperatures between +5C~+40C;
- The operating lighting must be minimum 50 Lux.

4. COMMISSIONING, TRANSPORTING, DECOMMISSIONING

a. Commissioning

After receiving our new reach truck or for re-commissioning you have to do following before (firstly) operating the truck:

- Check if all parts are included and not damaged
- Mast installation (please follow the instructions to install mast);
- Do the work according to the daily inspections as well as functional checks.
- Check battery installation and charge instructions (follow chapter 7).

Mast assembling:

Mast assembling required equipment:

Lifting equipment:

Driving (5 tons maximum load) or fork lifting (3 tons load capacity and 5.5 m lifting height)

Assistant tools: S24 wrench, crowbar.

Safety precautions:

Assembling operators must take appropriate training or be trained by professional personnel on-site to guide the assembling operation.

Operators for lifting equipment must get appropriate operating qualifications.

If the truck is directly forked on the crossbeam of the gantry, the gantry must be tied together with the protection rope to avoid the danger of slipping.

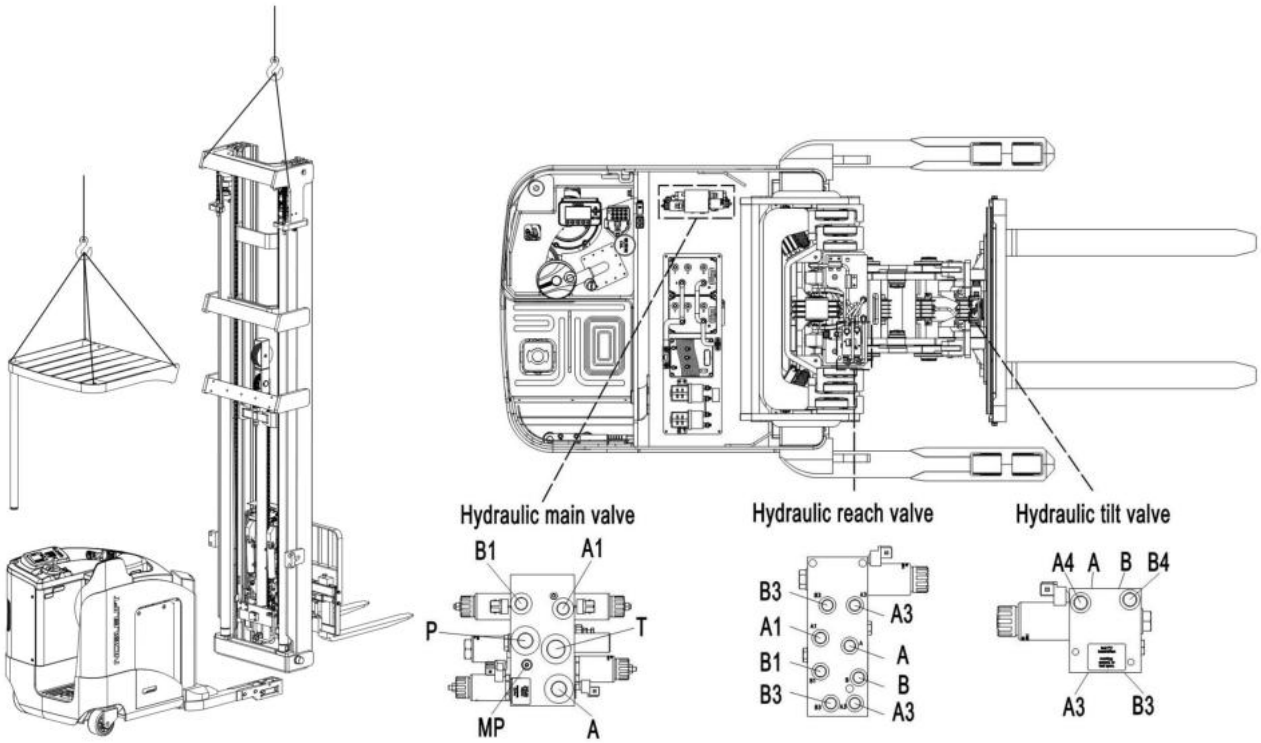

Fig. 7: Mast assembling diagram

Table 2: Chassis weight and mast weight

Truck type	RT15DP		RT20SP		RT15SP	
Chassis pack weight [kg]	2550					
Chassis pack size [mm]	2200x1450x1650					
Overhead guard pack weight [kg]	100					
Overhead guard pack size [mm]	1200x1200x1400					
Lift height H3 [mm]	4500	10500	4500	10500	4500	10500
Mast pack weight [kg]	1750	2450	1650	2350	1400	1950
Mast pack size [mm]	2400x1500x700	4400x1500x700	2400x1300x700	4400x1300x700	2400x1300x700	4400x1300x700

b. Lifting by crane/ transporting

When lift the truck, refer to the diagram below. The weight for chassis and mast is shown in table 2, for the weight of the whole truck, please check the ID plate.

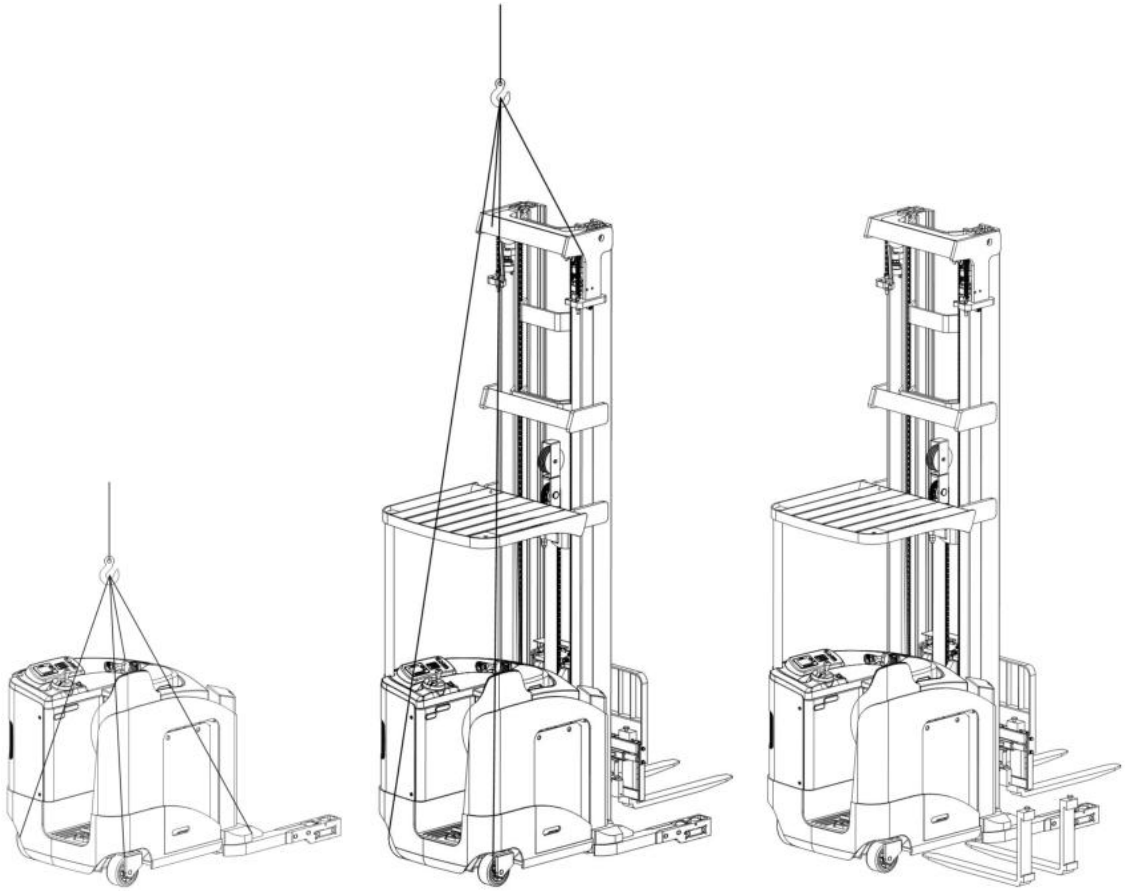

Lift the chassis by crane　　Lift the whole truck by crane　　Lift the truck by forks

Fig. 8: Lifting by crane

Lifting by crane

USE DEDICATED CRANE AND LIFTING EQUIPMENT.
DO NOT STAND UNDER THE SUSPENDED LOAD.
DO NOT WALK INTO THE HAZARDOUS AREA DURING LIFTING.
PLACE THE TRUCK ON A LEVEL GROUND.

Transporting

- ALWAYS FASTEN THE TRUCK SECURELY WHEN TRANSPORTED ON A LORRY
- OR A TRAILER. LOWER THE FORKS AND PARK THE TRUCK SECURELY.

Fasten the truck according to Fig. 8, put the wood blocks under the driving cab to prevent damage to the driving wheel in transporting.

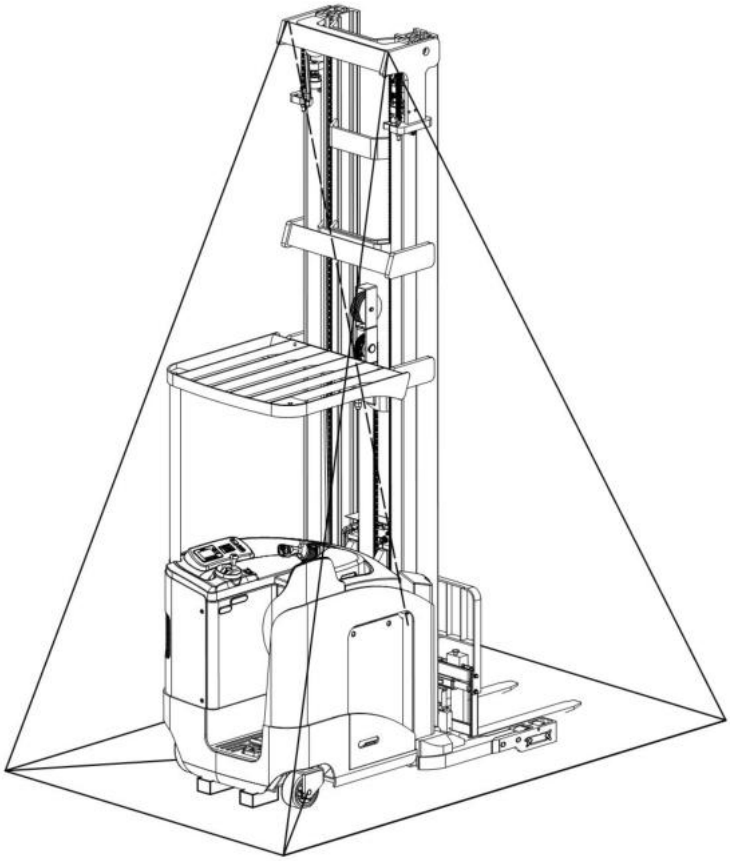

Fig. 9: Fixing points

c. Storage/ Decommisioning

Lower the forks to the lowest position, put the wood blocks under the driving cab to prevent damage to the driving wheel as it shown in Fig. 10 for long time storage.
Grease all greasing points mentioned in this manual (regular inspection), and eventually protect the truck against corrosion and dust.
Charge the truck for long storage every month to prevent damage to battery.
For final decommissioning hand the truck to a designated recycling company. Oil, batteries and electric components must be recycled due to legal regulations.

5. REGULAR INSPECTION

This chapter describes pre-shift checks before putting the truck into operation.
Regular inspection is effective to find the malfunction or fault on this truck. Check the truck on the following points before operation.

REMOVE THE LOAD FROM THE TRUCK AND LOWER THE FORKS.
DO NOT USE THE TRUCK IF ANY MALFUNCTION IS FOUND.

- Check for scratches, deformation or cracks.
- Check if there is any oil leakage from the cylinder.
- Check the function of driving in both directions.
- Check the chain and rollers are without damage or corrosion.
- Check the smooth movement of the wheels.
- Check the function of the emergency brake by activating the emergency button.
- Check the functions of foot brake.
- Check the lifting and lowering functions.
- Check if the seat is assembled tightly.
- Check the function of horn.
- Check if all bolts and nuts are tightened firmly.
- Check the function of key switch.
- Check the function of speed limitation.
- Visual check if there are any broken electric wires.
- If supplied with a load backrest, check it for damages and correct assembling.

Note: For the new truck or the truck after the replacement of the wheel, within the first 50 hours of work, the operator must check the tightening of the tire nut before operation every day, if the nut is found loose, it must be tightened with torque of 140Nm. It must be checked again after 50 hours of operation, and then repeated the inspection every 50 hours until there is no loosening (maintain the correct torque).

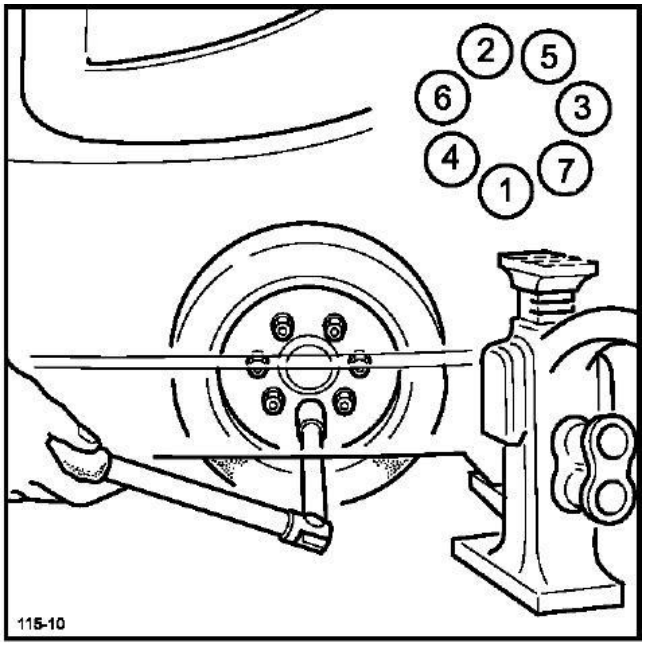

6. OPERATION INSTRUCTIONS

a. Overview of the control devices

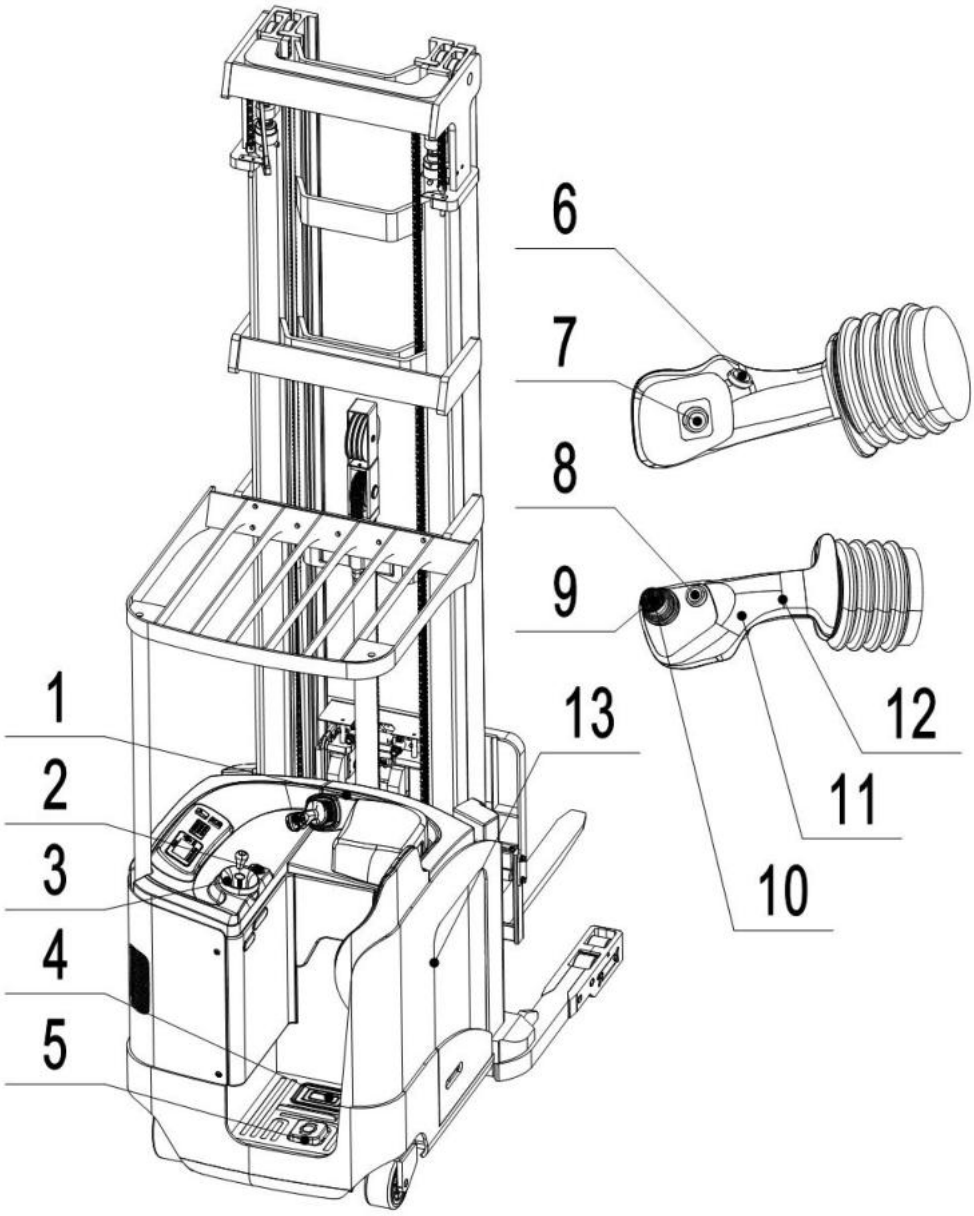

Fig. 10: Control devices

b. Power on the truck

Before operating the truck, make sure that the load is stable and will not cause poor visibility.

Pull the emergency button (1), insert the key to the switch (2), and turn it clockwise to "ON" position, then step on the pedal (4) and the brake (5). Before start the truck, please press the horn button (6) to activate the horn to warn others if necessary. The truck is power on.

Note: please set the direction switch in the neutral position before power-on operation, otherwise there will be an alarm of wrong operation sequence fault.

c. Travelling

After starting the truck by turning the inserted key to “ON” position, firstly step on the pedal (4) and the brake (5), then put your hand on the operating area. Push the control handle (12) towards forks or pull the handle backwards to set the travel direction, and apply different pushing/pulling force to control the speed until the truck reaches the desired speed. The speed will be slower if you release the control handle, control the speed to be secured. Release the brake (5) to sharply decelerate the truck.

Carefully drive the truck to the destination. Watch the route conditions and apply different pushing/pulling force to control the speed.

This truck is equipped with sufficient safety devices to avoid accidents. When the height of the fork is higher than the free lift height, the speed of the truck will be reduced to achieve smooth traction and secure work. When the fork is lowered below the free lift eight, the lower the forks, the slower the truck, and travel speed will return to normal speed.

Please keep the lifting height of the fork below 0.5 m when the truck travels at a faster speed.
Please drive the truck to the secure storage area and lower the fork to the lowest position after every use. Turn the key counterclockwise to "OFF" position and pull out the key.

Attention: Turn on the power, the system carry out the self inspection. If there is issue with the electrical system, such as open circuit, short circuit, or active buttons, and for example, press the brake pedal switch before operation, speed controller is not in the neutral position, and the truck can not be operated and there is an alarm, the truck will not work normally until the electrical system alarm is cleared.

d. Steering

THE TRUCK IS EQUIPPED WITH AN ELECTRIC STEERING SYSTEM. STEERING IS FLEXIBLE. TAKE CARE IN OPERATING THE TRUCK.

Steer the truck left/right by turning the steering wheel (3) counterclockwise/clockwise.
Turn the steering wheel to drive the truck straightly and reach full speed. Turn the steering wheel at a certain angle to turn the drive wheel during steering, when the angle is larger than ±10°, the steering speed is different with straight driving speed, the speed will be slower if the turning angle is much larger, it is designed for stable steering and secure operation.

e. Braking

THE BRAKING PERFORMANCE DEPENDS ON THE TRACK CONDITONS AND THE LOAD CONDITONS OF THE TRUCK.

- If the right hand releases the control handle during driving, the truck begins to decelerate. If a shorter braking distance is required, directly release left foot on the brake pedal until the truck stops;
- Release the safety pedal switch (4), the bake will be activated and the truck will stop.
- Press the emergency button (1), the bake will be activated and the truck will stop.

Attention: when the fork is loaded with goods, the braking shall be operated slowly. Do not apply the emergency button to avoid the falling load.

f. Residual capacity diagram

The residual capacity diagram indicates the maximum capacity Q [kg] for a given load centre c [mm] and the corresponding lift height h_3 [mm] for the truck with horizontal load.
The white mark on the mast indicates the specific lifting limits.

For instance, the truck with a load centre of gravity distance c of 600 mm and a maximum lift height h_3 of 10500 mm, the maximum capacity Q for RT15DP is 1200 kg.

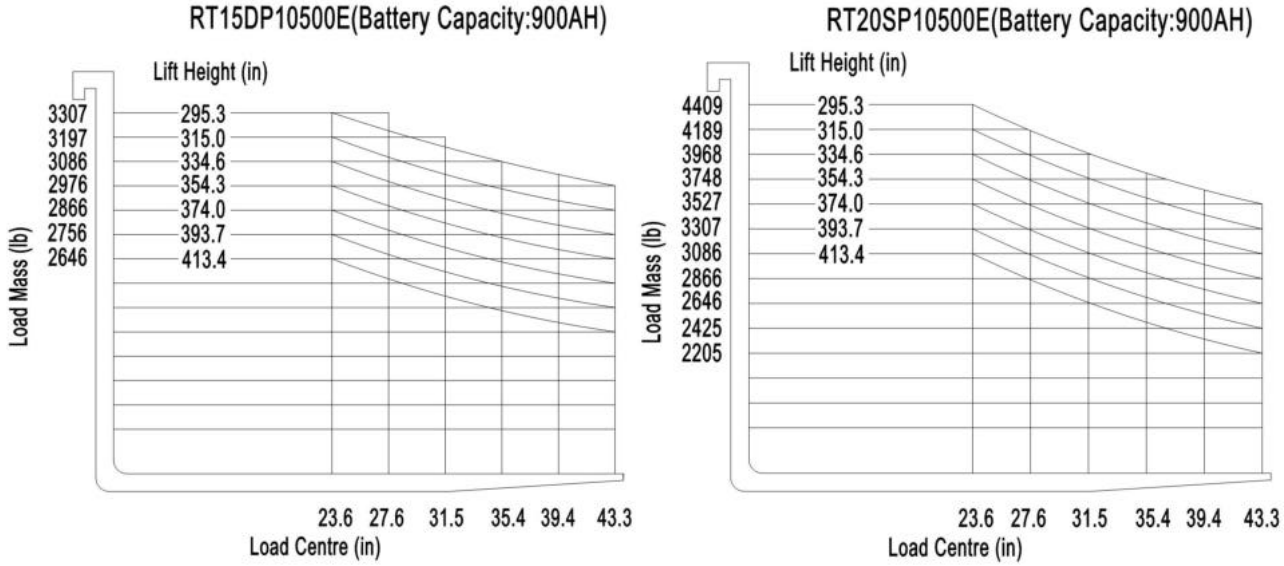

Fig. 11: Residual capacity diagram

g. Lifting

DO NOT OVERLOAD THE TRUCK! THE MAXIMUM CAPACITY IS 2000KG AND/OR 1500KG PLEASE REFER TO THE IDENTIFICATION PLATE.
LIFT THE LOAD ALLOWED IN RESIDUAL CAPACUITY DIAGRAM ONLY OR THE TRUCK WLL BE DAMAGED.

Pull the control handle (11) upwards until the truck reaches the desired lifting height.

When the lifting height of the unladen truck is more than 3m or the lifting height of the laden truck is more than 1m, please reduce the travelling speed of truck. Be careful of operation in steering, do not sharply start, stop or steer the truck.

Be cautious in lifting operation in the racks, pay attention to the gap between the load and the rack.

h. Lowering

If the forks are in the racks, firstly remove the truck out of the racks carefully with/ without the pallet.
Push the control handle (11) downwards.
Lower the load until the forks are clear of the pallet, then drive the truck carefully away from the load.

i. Fork reach (extend/retract) control

Push the fork reach control (9) forwards, the fork reaches forwards.
Push the fork reach control (9) backwards, the fork retracts backwards.

j. Fork sideshift (right/left) control

Press and hold the fork sideshift control (7) to the left, the fork shifts to the left.
Press and hold the fork sideshift control (7) to the right, the fork shifts to the right.

k. Fork tilt (up/down) control

Press the fork tilt control (10) forwards, the fork tilts down.
Press the fork tilt control (10) backwards, the forks tilts up.

l. Malfunctions

If there are any malfunctions or the truck is inoperative, please stop using the truck and push the emergency button (1). If possible, park the truck in a safe area, turn the key switch (2) counterclockwise and remove the key. Immediately inform the supervisor or call your service. If necessary, tow the truck out of the operating area by using dedicated towing/ lifting equipment.

When the truck is defective, the wrench sign indicator on the bottom of the display screen will be on. Apply CURTIS hand-held programmer to find out the cause.

m. Emergency

Immediately push the emergency button (1) in case of truck malfunctions, out of control and other emergency situations. All electrical functions will stop.
If the truck fails lowering the fork after the fork is lifted to the high position, please unscrew the screw (emergency descent) with a 6mm Allen-wrench to lower the fork.

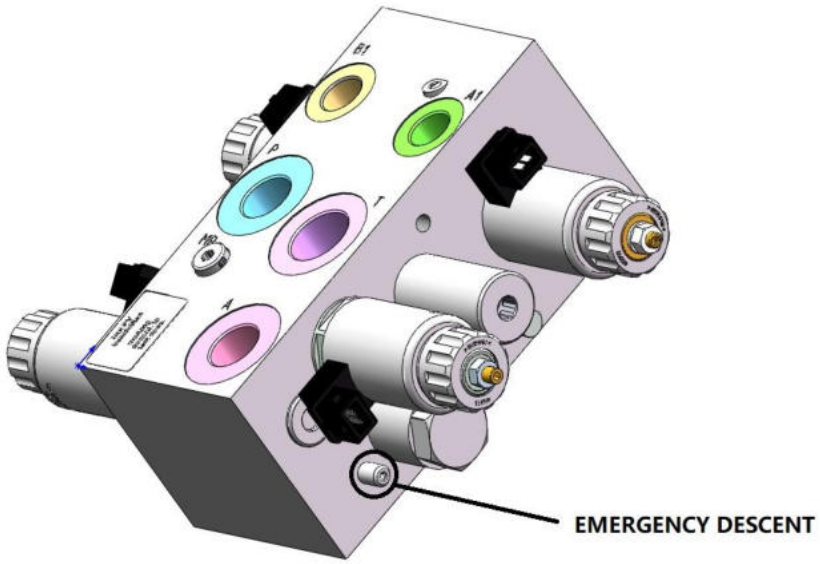

7. BATTERY CHANGES AND REPLACEMENT

- Only qualified personnel are allowed to service or charge the battery. The instructions of this manual and from the battery- manufacturer must be observed.
- The battery is lead-acid battery.
- Recycling of batteries undergoes national regulations. Please follow these regulations.
- By handling batteries, open fire is prohibited, gases could cause explosion!
- Neither burning materials nor burning liquids are allowed in battery charging area. Smoking is prohibited and the area must be ventilated.
- Park the truck securely before starting charging or installing/servicing the battery.
- Before finishing the maintenance work, make sure, that all cables are connected correctly and that there are no disturbing towards other components of the truck.
- In the process of charging or operating, the battery solution decreases due to water evaporation, check the battery solution level weekly, it should be maintained between MAX. And MIN. Level. Charge the battery after replenishing the battery solution with distilled water.

Distilled water replenishment and filling amount are shown as below:

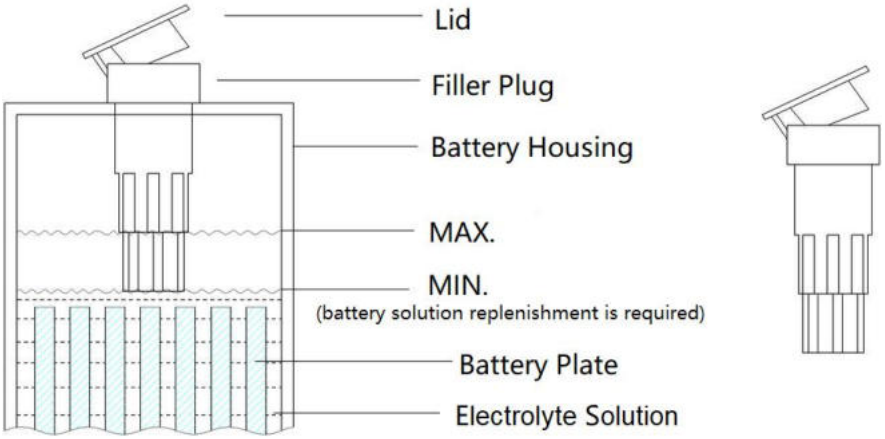

Fig. 12: Battery electrolyte solution level

Attention: If the electrolyte solution level is below MIN. level, replenish with distilled water other than the acid liquid (check the electrolyte specific gravity after charging). **After charging, the standard specific gravity of the battery electrolyte solution is 1.28g/ml.**

The truck is equipped with the battery as shown below:
RT15DP / RT15SP / RT20SP：

36V 600AH [360x980x785 mm (LxWxH)]
36V 700AH [410x980x785 mm (LxWxH)]
36V 800AH [457x980x785 mm (LxWxH)]
36V 900AH [500x980x785 mm (LxWxH)]

ONLY LEAD-ACID BATTERY IS ALLOWED IN APPLICATION.
THE BATTERY WEIGHT HAS AN INFLUENCE TO THE OPERATING BEHAVIOR OF THE TRUCK.
PLEASE CONSIDER THE MAXIMUM OPERATING TEMPERATURE OF THE BATTERY.

a. Battery replacement

Park the truck securely, turn off the key switch (2), press the emergency button (1), remove the battery connector (13), remove the battery compartment cover, and drag the battery along the lower guide rail out of the storage area. A pallet truck or the wood underneath may help the disassembly and installation of the battery.

Note that if the equipment is not secured, the battery may tip over.

Battery installation is in the reverse order of removal.

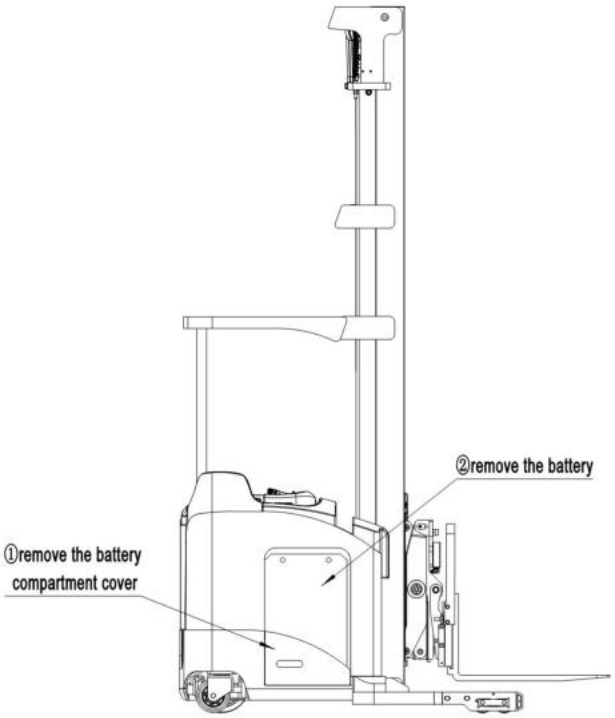

Fig.13: Battery replacement

b. Battery indicator and alarm

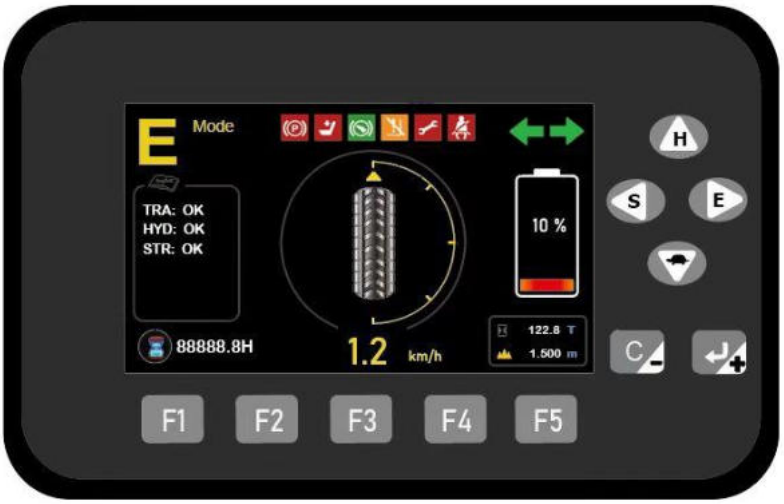

Fig.14: Display

The state of charge (SOC) of the battery is indicated on the right of the display, the full battery charge is indicated in 10 increments in green, each is represented by a rectangle that corresponds to 10% of the battery charge. When SOC is about 20%, the rectangles are in yellow, reminding the operator to charge the battery. When SOC is about 10%, the only one rectangle is in red and the warning symbol (the fourth from the left in the figure above) lights up, lifting is not allowed while slow traveling is working.

When the battery is removed, the display shows the fault TRA: 5.7, at this time traveling is not allowed, while mast reach (extend/retract) operation is available, maximum lifting height is around 600mm.
There is a Mode key on the right of the display, which switches the driving modes, as shown in Fig. 13:

H	Mode	High-speed mode	Full speed 9.5Km/h
S	Mode	Standard mode	Full speed 8.0Km/h
E	Mode	Economic mode	Full speed 6.0Km/h

When switching to economic mode, the turtle symbol is displayed in the upper left corner of the display.

c. Charging

- Before charging ensure that the appropriate charger is applied to charge the installed battery.
- Before using the charger, please fully understand the instructions of the charger instructions manual.
- Please follow these instructions.
- The room for charging must be ventilated.

Park the truck at a dedicated secured area with dedicated power supply. Lower the fork and remove the load.
Switch the truck off and connect the battery to the charger.
The charger starts charging the battery.
Disconnect the battery from charger after charging.
Connect the battery connector (13) with the the truck.

8. REGULAR MAINTENANCE

- Only qualified and trained personnel are allowed to maintain this truck.
- Remove the load from the fork and lower the fork to the lowest position before maintenance.
- Follow instructions in chapter 4b to lift the truck by using designated lashing or jacking equipment. Before operation, place safety devices (for instance designated lift jacks, wedges or wooden blocks) under the truck to prevent accidental lowering, movement or slipping.
- To remove the high-pressure hydraulic hose, lower the fork and turn off the power. After 10 minutes, the pressure in each hose is released and then remove the hose.
- Use approved and from your dealer released original spare parts.
- Please consider that hydraulic fluid leakage may result in failures and accidents.
- It is allowed to adjust the pressure valve only from trained service technicians.

If you need to replace the wheel, please follow the instructions above. Casters must be round and free of abnormal wear.
Check the items emphasized in maintenance checklist.

a. Maintenance checklist

		Interval (Month)			
		1	3	6	12
	Hydraulic system				
1	Check the hydraulic cylinder(s), piston for damage noise and leakage		•		
2	Check the hydraulic joints for damage and leakage		•		
3	Inspect the hydraulic oil level, refill if necessary		•		
4	Refill the hydraulic oil (12 month or 1500 working hours)				•
	Mechanical system				
5	Inspect the forks for deformation and cracks		•		
6	Check the chassis for deformation and cracks		•		
7	Check if all screws are fixed		•		
8	Check mast and chain for deformation and damages, replace if necessary	•			
9	Check the gearbox for abnormal sound, noise and leakage		•		
10	Check the wheels for deformation and damages, replace if necessary		•		
11	Check and lubricate the mast and chain	•			
12	Lubricate the grease nipples		•		
13	Check the function of brake	•			
	Electrical system				
14	Inspect the electric wiring for damage		•		
15	Check the electric connections and terminals		•		
16	Test the Emergency switch function		•		
17	Check the electric drive motor for noise and damages		•		

18	Test the display		•		
19	Check, if correct fuses are used		•		
20	Test the warning signal		•		
21	Check the contactor (s)		•		
22	Check the frame leakage (insulation test)		•		
23	Check function and mechanical wear of the accelerator		•		
24	Check the electrical system of the drive motor		•		
	Braking system				
25	Check brake performance, if necessary replace disc or adjust air gap		•		
	Battery				
26	Check the battery electrolytic liquid proportion		•		
27	Clean and grease the terminals and check for corrosion and damage		•		
28	Check the battery housing for damages		•		
	Charger				
29	Check the main power cable for damages			•	
30	Check the start-up protection during charging			•	
	Function				
31	Check the horn function	•			
32	Check the air gap of the electromagnetic brake	•			
33	Test the emergency braking	•			
34	Test the reverse and regenerative braking	•			
35	Check the steering function	•			
36	Check the lifting and lowering function	•			
37	Check the tiller arm switch function	•			
38	Check the key switch for damage or normal work	•			
39	Check the speed limitation switch function	•			
	General				
40	Check if all decals are legible and complete	•			
41	Check if the protective screen and or guarding is not damaged	•			
42	Inspect the castors, adjust the height or replace them if worn out.		•		
43	Carry out a test run	•			

b. Lubricating points

Lubricate the marked points according to the maintenance checklist. The required grease specification is: DIN 51825, standard grease.

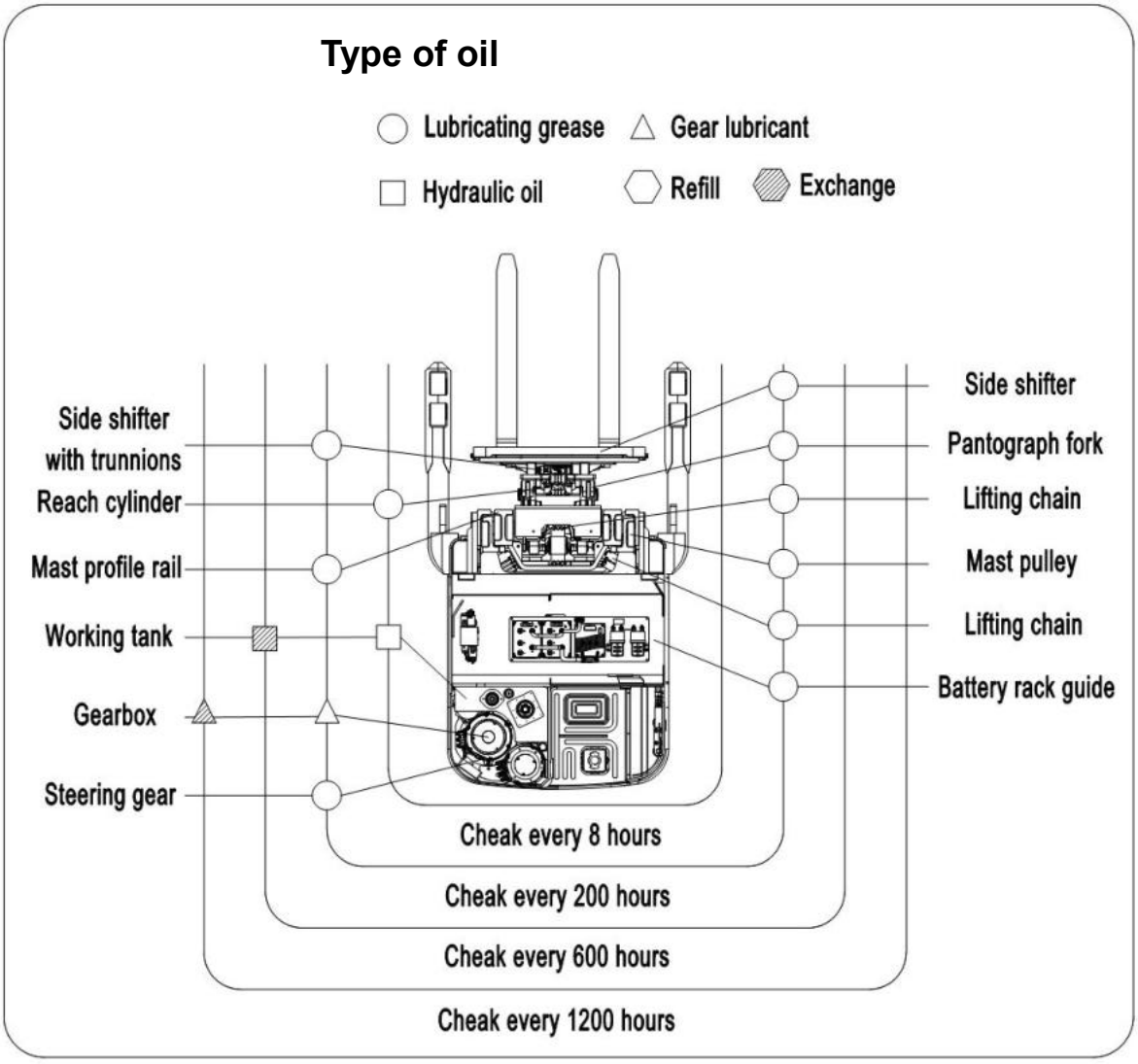

Fig. 15: Lubricating points

c. Check and refill hydraulic oil

It is recommended to fill the hydraulic oil:

- Type: H-LP 32, DIN 51524
- Viscosity: 41.4 – 47

Waste material like oil, used batteries or other must be probably disposed and recycled according to the national regulations and if necessary brought to a recycling company.

The oil level in the oil tank should not be under the min mark for lifting load.

If necessary add oil to the filling point.

d. Check the electrical fuses

Remove the plastic cover, the location of fuses is shown in Fig. 15. Specification of the fuses is shown in Table 4.

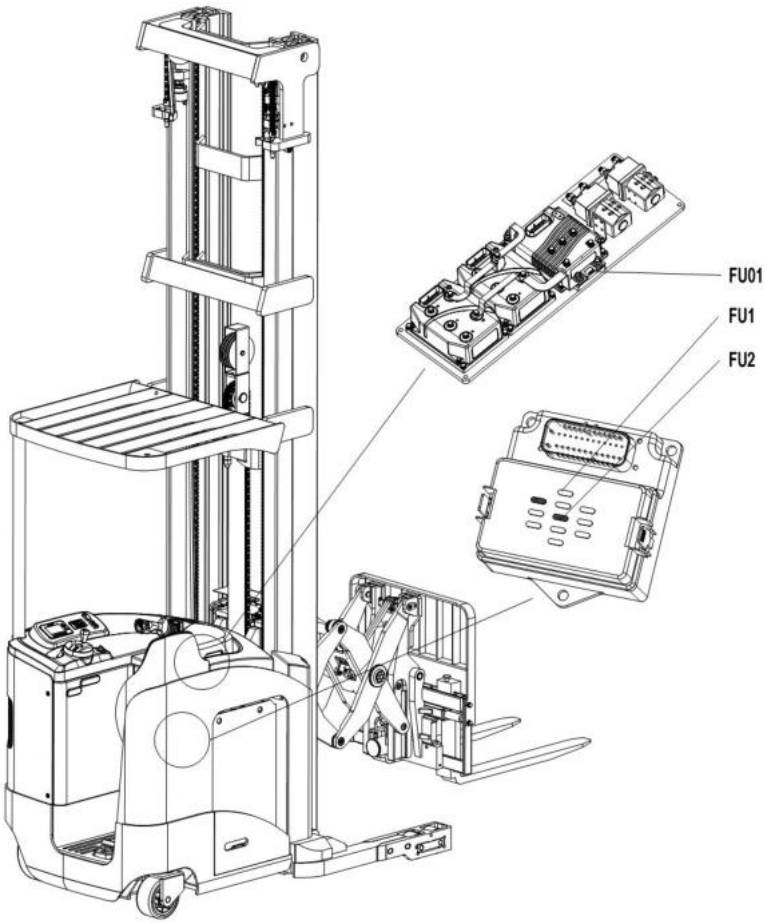

Fig 16: Location of fuses

Table 4: Fuse specification

	Rate	Qty.
FU 01	500A	1pc
FU 1	10A	9pcs
FU 2	15A	2pcs

9. TROUBLE SHOOTING

- If the truck malfunctions, follow the instructions in chapter 6.

Table 5: Trouble shooting

TROUBLE	CAUSE	MAINTENANCE
Load lifting failure	Load weight too high	Lift only the max. capacity, mentioned on the ID-plate
	Battery discharged	Charge the battery
	Lifting fuse failure	Check and eventually replace the lifting fuse
	Hydraulic oil level too low	Check and eventually refill hydraulic oil
	Oil leakage	Repair the hoses and/or the sealing of the cylinder
Oil leakage from air suction	Excessive quantity of oil	Reduce oil quantity.
Truck operating failure	Battery is charging	Charge the battery completely and then remove the main power plug form the electrical socket.
	Battery not connected	Connect the battery correctly
	The fuse is faulty	Check and eventually replace fuses
	Battery discharged	Charge the battery
	Emergency button is activated	Deactivate the button by inserting and pulling the knob.
Only travelling in one direction	The accelerator and the connections are damaged.	Check the accelerator and the connections.
The truck only travels very slowly	The battery is discharged.	Check the battery status at the discharge indicator
	The electromagnetic brake is engaged.	Check the electromagnetic brake
	The relating tiller cables are disconnected or damaged	Check the tiller cables and connections.
	Electric system overheated	Stop using and cool down the truck
	Heat sensor failure	Check and if necessary replace the thermal sensor
The truck starts up suddenly	The controller is damaged.	Replace the controller.
	The accelerator not moves back to its neutral position.	Repair or replace the accelerator.

If the truck has malfunctions and can't be operated out of the working zone, jack the truck up and go with a load handler under the truck and secure the truck. Then move the truck out of the aisle

10. WIRING/CIRCUIT DIAGRAM

Electrical circuit diagram

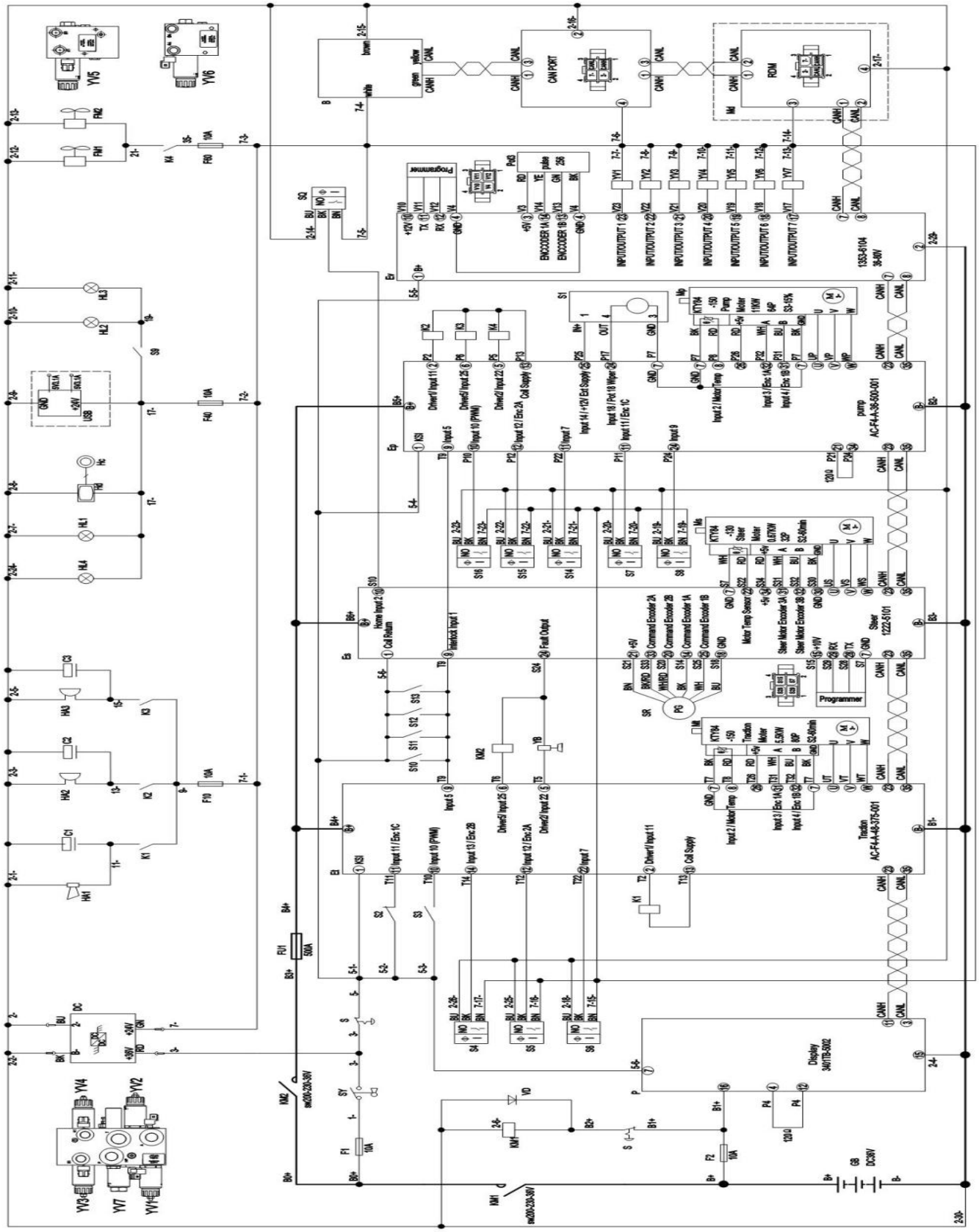

Fig. 17: Electrical circuit diagram

Table 6: Description of electrical components

Code	Item	Code	Item
GB	Battery 36V	SQ	0° proximity switch
F1	Fuse 10A	Et	Traction controller
F2	Fuse 10A	Ep	Pump controller
F10	Fuse 10A	Es	Steering controller
F40	Fuse 10A	Ev	Valve control
F60	Fuse 10A	B	Control handle
FU1	Fuse 500A	DC	DC converter
KM1	Main contactor	USB	USB
KM2	Main contactor	S14	Reach speed limit switch
S	Emergency awitch	Pot3	Height encoder
S1	Pressure sensor	HA1	Horn
S2	Electromagnetic brake 1	HA2	Reverse buzzer
S3	Electromagnetic brake 2	Hd	Monitor
S4	Lift speed limit switch	Hc	Camera
S5	Lift limit switch	HL1	Warning signal light
S6	Travel speed limit switch	HL2	Front lamp (left)
S7	Fork reach (retract) limit switch	HL3	Front lamp (right)
S8	Fork reach (extend) limit switch	FM1, FM2	Fan
S9	Lamp switch	SY	Key switch
S10	Interlock switch 1	YB	Electromagnetic brake
Ms	Steering motor	P	Display
Mp	Pump motor	C1, C2, C3	Capacitor
Mt	Traction motor	Md	IoT module
YV1	Lifting proportional valve	S11	Interlock switch 2
YV2	Lowering proportional valve	S12	Interlock switch 3
YV3	Split flow 1 proportional valve	S13	Interlock switch 4
YV4	Split flow 2 proportional valve	HA3	Fork leveling buzzer
YV5	Tilt valve	K3	Fork leveling relay
YV6	Sideshift valve	K4	Fan relay
YV7	Regulating valve	VD	Diode
K1	Horn relay	HL4	Blue ray
K2	Reverse relay	S15	Fork leveling switch 1
SR	Steering encoder	S16	Fork leveling switch 2

11. HYDRAULIC DIAGRAM

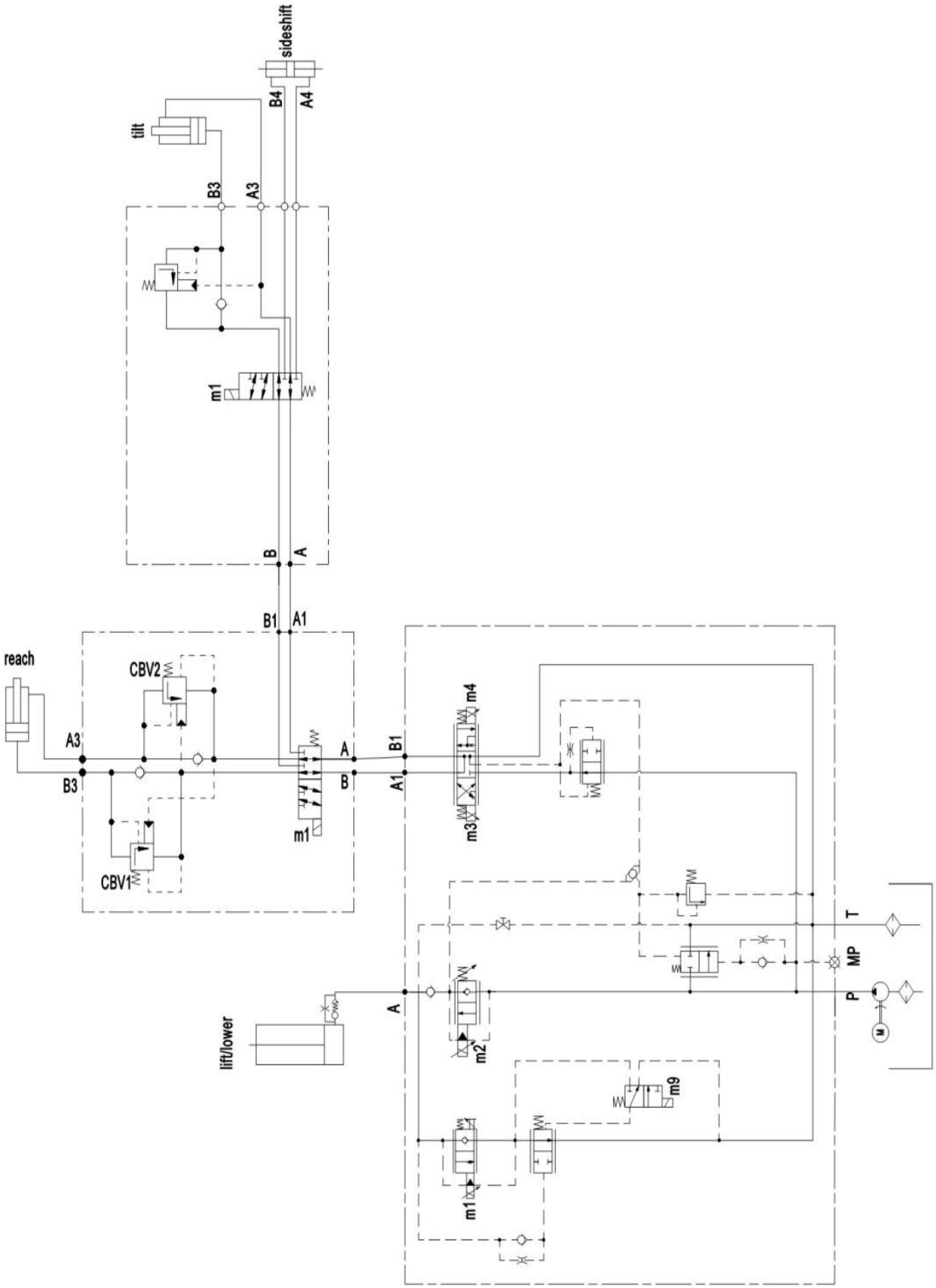

Fig. 18: Hydraulic diagram

12. DIAGNOSTICS AND TROUBLESHOOTING

These controllers detect a wide variety of faults or error conditions.
The trouble shooting list is arranged in flash code sequence, indicating the fault name, VCL name and CAN object index, including the fault type; The possible causes, setting and clearing conditions and troubleshooting methods are listed. After the setting condition is resolved, the fault is usually cleared by a KSI, but can be handled with the applicable VCL Reset function or can NMT Reset function.

You can obtain diagnosis information in the following ways: (1) observe the blinking fault code on the controller LEDs; (2) read the LEDs built into the Curtis Integrated Toolkit Programmer tool; (3) CAN emergency messages.
The pair of LEDs (one red, one yellow) produce flash codes displaying all the currently set faults in a repeating cycle.

DISPLAY	STATUS
Neither LED illuminated	Controller is not powered on/ vehicle has dead battery/ or severe damage.
Yellow LED flashing	Controller is operating normally.
Yellow LED or orange LED	The controller is in flash program mode, or corrupt software is preventing the unit from completing the boot sequence (boot process).
Red LED and yellow LED flash alternately	Controller has detected a fault, check the troubleshooting table.
Red LED light on solid	No software loaded, or an internal hardware fault detected by the Supervisor or Primary microprocessor. Cycle KSI to clear. Reload software or replace controller if necessary.
Red LED flashing	Non-production/lab/custom device profile software

When diagnosing a fault with Curtis Integrated ToolkitTM Programmer tool, the active fault is located at the top of the menu panel and displays "type" if there are multiple possible causes for a fault.

In the System Monitor menu, the Fault History menu provides additional information; Count Indicates the number of times the history has been cleared since the execution. The menu item "Time" represents the KSI hours when the current fault occurred, in seconds (#sec/3600 = hours), while the menu item "First Time" is used to track the time when the fault first occurred, if there were multiple failures before the history was cleared. The "Type" listed at the top of the menu panel is duplicate and is the current "Fault Type" for faults with multiple types.

Troubleshooting

The troubleshooting chart provides the following information on all the controller faults:
• fault code
• fault name as displayed on the programmer's LCD
• the effect of the fault
• possible causes of the fault
• fault set conditions
• fault clear conditions.

Whenever a fault is encountered and no wiring or vehicle fault can be found,shut off KSI and turn it back on to see if the fault clears. If it does not, shutoff KSI and remove the 35-pin connector. Check the connector for corrosion or damage, clean it if necessary, and re-insert it.

Troubleshooting chart of F4A controller (traction and pump controller)

NO.	FLASH CODE	FAULT NAME	FAULT ACTIONS	POSSIBLE CAUSES SET/CLEAR CONDITIONS	FAILT CAUSE	NOTE
1	1-2	**Controller Overcurrent** Fault Type(s): 1 = Controller OverCurrent Phase U 2 = Controller OverCurrent Phase W 3 = Controller OverCurrent Phase V 4 = Irms > 135 % Current Limit	ShutdownMotor ShutdownMainContactor ShutdownEMBrake ShutdownThrottle FullBrake	1. External short of phase U, V, or W motor connections. 2. Speed encoder noise problems. 3. Motor parameters are mistuned. 4. Controller defective.	Controller	
2	1-3	**Current Sensor** Fault Type(s): 1	ShutdownMotor ShutdownMainContactor ShutdownEMBrake ShutdownThrottle FullBrake	1. Leakage to vehicle frame from phase U, V, or W (short in motor stator). 2. Controller defective. Clear: Reset Controller.	Controller	
3	1-4	**Precharge Failed** Fault Type(s): 1 = Abort. 2 = Energy Limit Exceeded 3 = Time Limit Exceeded	ShutdownMotor ShutdownMainContactor ShutdownEMBrake ShutdownThrottle FullBrake	1. An external load on the capacitor bank (B+ connection terminal) that prevents the capacitor bank from charging. 2. See Programmer » System Monitor menu » Controller » Capacitor Voltage. Clear: Reset Controller.	Controller	
4	1-5	**Controller Severe Undertemp** Fault Type(s): 1	ShutdownMotor ShutdownMainContactor ShutdownEMBrake ShutdownThrottle FullBrake	1. Controller is operating in an extreme environment. 2. See Programmer » System Monitor menu » Controller » Controller Temperature. Clear: Bring the heatsink temperature above –40°C and then Cycle KSI or Interlock, if fault is still there, Reset Controller.	Controller	
5	1-6	**Controller Severe Overtemp** Fault Type(s): 1	ShutdownMotor ShutdownMainContactor ShutdownEMBrake ShutdownThrottle FullBrake	1. Controller is operating in an extreme environment. 2. Excessive load on vehicle. 3. Improper mounting of controller. 4. See Programmer » System Monitor menu » Controller » Controller Temperature. Clear: Bring heatsink	Controller	

				temperature below +95°C and then Cycle KSI or Interlock, if fault is still there, Reset Controller.		
6	1-7	**Severe B+ Undervoltage**	No drive torque.	1. Non-controller system drain on battery. 2. Battery resistance too high. 3. Battery disconnected while driving. 4. Blown B+ fuse or main contactor did not close. 5. Battery parameters are misadjusted. 6. See Programmer » Monitor menu » Controller » Capacitor Voltage.	Controller	
7		**Severe KSI Undervoltage**	<u>Fault Action:</u> None, unless a fault action is programmed in VCL.	1. Non-controller system drain on battery/keyswitch circuit wiring. 2. Resistance in low power (KSI) circuit is too high. 3. KSI disconnected while driving. 4. Blown fuse. 5. See Programmer»System Monitor menu» Battery» Keyswitch Voltage.	Controller	
8	1-8	**Severe B+ Overvoltage**	ShutdownMotor ShutdownMainContactor ShutdownEMBrake ShutdownThrottle FullBrake	1. Battery parameters are misadjusted. 2. Battery resistance too high for given regen current. 3. Battery disconnected while regen braking. 4. See Programmer» System Monitor menu » Controller » Capacitor Voltage.	Controller	
9		**Severe KSI Overvoltage**	ShutdownMotor ShutdownMainContactor ShutdownEMBrake ShutdownThrottle FullBrake	1. Battery-voltage applied to KSI (pin 1) exceeds the Severe Overvoltage limit. 2. See Programmer » Monitor menu » Battery » Keyswitch Voltage.	Controller	
10	1-9	**Speed Limit Supervision**	ShutdownInterlock ShutdownEMBrake	1. Motor speed detected that exceeds the limit set by the Max Speed. Supervision parameter. 2. Misadjusted Max Speed Supervision parameters. 3. See: Programmer »	Controller	

				Application Setup » Max Speed Supervision menu.		
11	1-A	**Motor Not Stopped** Fault Type(s): 1 = The motor moved more revolutions than the parameter, Motor_ Not_Stopped_Position_Error setting. 2 = The motor moved faster than the parameter, Motor_ Not_Stopped_Speed_Error (RPM) for 160ms. 3 = The three-phase drive has applied an electrical frequency greater than the Motor _Not_Stopped_Max_ Frequency parameter, and applied an RMS current greater than the Motor _Not_ Stopped_Max_Current parameter for 64 ms.	ShutdownMotor ShutdownMainContactor ShutdownEMBrake ShutdownThrottle FullBrake	1. Misadjusted Motor Not Stopped parameters. 2. See: Programmer » Application Setup » Motor Not Stopped menu. 3. Internal Controller fault or conflict allowing the motor to rotate when in the stopped state.	Control ler	
12	1-B	**Critical OS General** Fault Type(s): (<100) Internal Fault. Contact Curtis support. (>100) An ill-formed or corrupted application package was loaded into controller.	ShutdownMotor ShutdownMainContactor ShutdownEMBrake ShutdownThrottle ShutdownInterlock ShutdownDriver1-7 ShutdownPD FullBrake ShutdownPump ShutdownCoilSupply	1. (<100) Internal Fault. 2. (>100) CIT version is too old to fully support the FOS version.	Control ler	
13	1-C	**OS General 2** Fault Type(s): (<100) Internal Fault. Contact Curtis support. (>100) An ill-formed or corrupted application package was loaded into controller.	NO ACTION (controller is not operable)	1. (<100) Internal Fault. 2. (>100) CIT version is too old to fully support the FOS version.	Control ler	
14	1-D	**Reset Rejected** Fault Type(s): 1	ShutdownInterlock ShutdownThrottle	Clear: Cycle KSI.	Control ler	
15	1-E	**Motor Short** Fault Type(s): 1	NO ACTION (controller is not operable)	Clear: Reset controller.	Control ler	

16	2-2	**Controller Overtemp Cutback**	Reduced drive torque. Reduced regen-braking torque.	1. Controller is operating in an extreme environment. 2. Excessive load on vehicle. 3. Improper mounting of controller which is preventing controller cooling. 4. Controller is performance-limited at this temperature. 5. See Programmer » System Monitor menu » Controller » Temperature. Clear: Bring heatsink temperature below 85°C and then Cycle KSI or Interlock, if fault is still there, Reset Controller.	Controller	
17	2-3	**Undervoltage Cutback** Fault Type(s): 1	Reduced drive torque.	1. Batteries need recharging. Controller is performance limited at this voltage. 2. Battery parameters are misadjusted. 3. Non-controller system- drain on battery. 4. Battery resistance too high. 5. Battery disconnected while driving. 6. Blown B+ fuse or main contactor did not close. 7. See Programmer » System Monitor menu » Controller » Cutbacks» Undervoltage Cutback. 8. See Programmer» System Monitor menu » Controller » Capacitor Voltage.	Controller	
18	2-4	**Overvoltage Cutback** Fault Type(s): 1	Reduced brake torque. Note: This fault is declared only when the controller is running in regen.	1. Normal operation. Fault shows that regen braking currents elevated the battery voltage during regen braking. Controller is performance limited at this voltage. 2. Battery parameters are misadjusted. 3. Battery resistance too high for given regen current. 4. Battery disconnected while regen braking. 5. See Programmer » System Monitor menu » Controller »	Controller	

				Cutbacks » Overvoltage Cutback. 6. See Programmer» System Monitor menu » Controller » Capacitor Voltage.		
19	2-5	**Ext 5V Supply Failure** Fault Type(s): 1 = 5V Supply's voltage is out- of-range 2 = 5V Supply's current is out- of-range	Disables the 5V Supply.	1. External load impedance on the +5V supply (pin 16) is too low. 2. See the System Monitor » Outputs menu: External_5V_ Supply, Ext_5V_Current.	Control ler	
20	2-6	**Ext 12V Supply Failure** Fault Type(s): 1 = 12V Supply's voltage is out-of-range 2 = 12V Supply's current is out-of-range	Disables the 12V Supply.	1. External load impedance on the +12V supply (pin 23) is too low. 2. See Programmer» System Monitor menu » Outputs: External_ 12V_Supply, Ext_ 12V_Current.	Control ler	
21	2-8	**Motor Temp Hot Cutback**	1. Torque is reduced. 2. If MotorBraking Thermal CutBack_ Enable = On, then Regen Braking.	1. Motor temperature is at or above the programmed Temperature Hot setting—resulting in a reduction of controller drive current. 2. The motor temperature and sensor control parameters are misadjusted. 3. See Programmer » AC Motor Setup » Temperature Sensor.	Control ler	
22	2-9	**Motor Temp Sensor**	Enter LOS mode. Motor speed is reduced. Motor temperature cutback disabled.	1. Motor thermistor is not connected properly. 2. Sensor polarity (between pin 9 and pin 12) is incorrect. 3. The motor temperature and sensor parameters are misadjusted. 4. See Programmer» System Monitor menu » AC Motor » Temperature.	Control ler	
23	3-1	**Main Driver** Fault Type(s): 1 = Drive short. 2 = Drive Overcurrent. 3 = Driver open/ short (Voltage measured high, should be low.) 4 = Drive open/ short (Voltage measured low, should be high.) 5 = Wiring disabled.	ShutdownMotor ShutdownMainContactor ShutdownEMBrake ShutdownThrottle FullBrake	1. Open or short on driver load. 2. Dirty connector pins at controller or contactor coil. 3. Bad connector crimps or faulty wiring.	Control ler	

24	3-2	**EM Brake Driver Fault** Fault Type(s): 1 = Drive short. 2 = Drive Overcurrent. 3 = Driver open/ short (Voltage measured high, should be low.) 4 = Drive open/ short (Voltage measured low, should be high.) 5 = Wiring disabled.	ShutdownEMBrake ShutdownThrottle FullBrake	1. Open or short on driver load. 2. Dirty connector pins at controller or contactor coil. 3. Bad connector crimps or faulty wiring.	Controller	
25	3-4	**Load Hold Diver Fault**	The assigned driver is open.	Same as Driver 1 Fault	Controller	
26	3-5	**Lower Driver Fault**	Shutdown the assigned driver.	Same as Driver 1 Fault	Controller	
27	3-6	**Encoder Fault** Fault Type(s): 1. Checksum loss. 2. Pulse loss due to Over-current. 3. Speed pulse signal loss. 4. Motor matching. 5. Encoder supply failed.	ShutdownEMBrake ShutdownThrottle FullBrake	1. Motor encoder failure. 2. Bad crimps or faulty wiring. 3. See Programmer» System Monitor Menu » AC Motor » Motor RPM. 4. See Programmer» System Monitor menu » Hardware Inputs: Analog 3 and 4.	Controller	
28	3-7	**Motor Open**	ShutdownMotor ShutdownMainContactor ShutdownEMBrake ShutdownThrottle FullBrake	1. Motor phase is open. 2. Bad crimps or faulty wiring.	Controller	
29	3-8	**Main Contactor Welded**	ShutdownMotor ShutdownMainContactor ShutdownEMBrake ShutdownThrottle FullBrake	1. Main contactor tips are welded closed. 2. Motor phase U or V is disconnected or open. 3. An alternate voltage path (such as an external circuit to B+) is providing a current to the capacitor bank (B+ connection terminal).	Controller	

30	3-9	**Main Contactor Did Not Close** Fault Type(s): 1 = Main did not close when commanded. 2 = Main disconnected during operation.	ShutdownMotor ShutdownMainContactor ShutdownEMBrake ShutdownThrottle FullBrake	Type 1: 1. Main contactor did not close. 2. Main contactor tips are oxidized, burned, or not making good contact. 3. An external load on the capacitor bank (B+ connection terminal) is preventing the capacitor bank from charging. 4. Blown B+ fuse. 5. Main Contactor parameters mistuned; Type 2: 1. Main contactor opened during operation (while commanded closed). 2. Driver wiring to contactor's coil (e.g., pin wiring) removed during operation. 3. Contactor/coil defective.	Controller	
31	4-2	**Throttle Input** Fault Type(s): * 1 = Outside the Low or High parameter.	ShutdownThrottle	1. Throttle voltage exceeded the Analog Low or Analog High parameters for the analog input defined for the throttle input. 2. See Programmer » Controller Setup » Inputs » Analog 1 Type. 3. See Programmer » Controller Setup » Inputs » Configure.	Controller	
32	4-4	**Brake Input**	FullBrake	Triggered by the respective fault diagnostic associated with the brake input source (assigned analogX input). Note: An Input fault diagnostics may be out of range if it is configured as a voltage input.	Controller	
33	4-6	**NV Memory Failure** Fault Type(s): 1 = Invalid checksum. 2 = NV write failed. 3 = NV read failed. 4 = NV write did not complete during power down.	ShutdownMotor ShutdownMainContactor ShutdownEMBrake ShutdownThrottle ShutdownInterlock ShutdownDriver1-5 ShutdownPD FullBrake	1. Failure to read or write to nonvolatile (NV) memory. 2. Internal controller fault.	Controller	

34	4-7	**HPD Sequencing**	ShutdownThrottle	1. Incorrect sequence in application of KSI, Interlock, Direction, or Throttle. 2. Faulty wiring, crimps, or switches at KSI, Interlock, Direction, or Throttle. 3. Moisture in above-noted digital input switches causing invalid (real) On/Off state. 4. Verify input switch status. See Programmer » System Monitor menu » Hardware Inputs » Switch Status. 5. Verify Throttle. See Programmer » System Monitor menu » Hardware Inputs » Throttle Command.	Controller	
35		**EMR Rev HPD**	ShutdownThrottle ShutdownEMBrake	Emergency Reverse operation has concluded, but the throttle, forward and reverse, and interlock inputs have not been returned to neutral.	Controller	
36		**Pump HPD** Fault Type(s): 1. Only lifting 2. Only lowering 3. Lifting and lowering	ShutdownPump	Incorrect lifting/lowering throttle input condition (>25%) Parameters setting errors: 1. Hydraulic suppression type 2. HPD/SRO judgment time Pump throttle hardware fault	Controller	
37	4-9	**Parameter Change** Fault Type(s): Reports the CAN Object ID of parameter.	ShutdownMotor ShutdownMainContactor ShutdownEMBrake ShutdownThrottle FullBrake	While the Interlock was On, a safety- based parameter was changed. Parameters with this property are marked with a [PCF] (Parameter Change Fault) in the Parameter listings.	Controller	
38	4-A	**EMR Switch Redundancy**	ShutdownInterlock ShutdownEMBrake	1. Either or both Emergency Reverse input switches are inoperative, resulting in an invalid state. 2. Ingress of dirt or moisture in switch(es).	Controller	
39	7-1	**OS General**	ShutdownAll	Reset controller	Controller	
40	7-2	**PDO Timeout**	Set: Time between CAN PDO messages received exceeded the PDO Timeout Period. Clear: Receive CAN NMT message, or Reset	1. The time between CAN PDO messages received exceeded the PDO Timeout Period as defined by the Event Timer parameter. 2. Adjust PDO Settings. See	Controller	

			Controller.	Programmer » Application Setup » CAN Interface » PDO Setups.		
41	7-3	**Stall Detected**	ShutdownMotor ShutdownEMBrake ShutdownThrottle Control Mode changed to LOS (Limited Operating Strategy)	1. Stalled motor. 2. Motor encoder failure. 3. Bad crimps or faulty wiring. 4. Problems with power supply for the motor encoder. 5. See Programmer »System Monitor menu » AC Motor » Motor RPM.	Controller	
42	7-7	**Supervision** Fault Type(s): Curtis supervision code.	ShutdownMotor ShutdownMainContactor ShutdownEMBrake ShutdownThrottle ShutdownInterlock ShutdownDriver1-5 ShutdownPD FullBrake	Set: Internal controller failure.	Controller	
43	7-9	Supervision Input Check	ShutdownMotor ShutdownMainContactor ShutdownEMBrake ShutdownThrottle ShutdownInterlock ShutdownDriver1-5 ShutdownPD FullBrake	Set: Internal controller failure.	Controller	
44	8-2	PDO Mapping Error	PDO message disabled.	1. The PDO Map has too many data bytes assigned or has objects mapped that are not compatible. 2. Adjust PDO Settings. See Programmer » Application Setup » CAN Interface » PDO Setups.	Controller	
45	8-3	**Internal Hardware** Fault Type(s): Curtis hardware code.	ShutdownMotor ShutdownMainContactor ShutdownEMBrake ShutdownThrottle FullBrake	Set: Internal controller fault detected.	Controller	
46	8-4	**Motor Braking Impaired**	ShutdownMotor ShutdownMainContactor ShutdownEMBrake ShutdownThrottle FullBrake	Battery overcharged, excessive motor or controller heating, or misadjusted parameters. Clear: Reset interlock.	Controller	

47	8-7	**Motor Characterization Error** Fault Type(s): 1 Write to memory RAM failure 72 Temp sensor fault 73 Motor hot 74 Controller temperature cutback 76 Undervoltage cutback 77 Overvoltage cutback 78 Encoder not reading properly 79 Current Regulator Tuning out of range 80 Current Regulator Tuning out of range 81 Encoder signal seen but step size not auto-detected, it must be set manually. 82 Aborted auto-commissioning 90/98 PMAC Motor feedback sine/cosine signal not detected 91 PMAC motor not rotating or motor type incorrect 92 PMAC Motor not accelerating. Or low acceleration 94-97 PMAC lag compensation out of range 99 PMAC Motor rotating when starts characterization 102 PMAC motor temp sensor fault 103 PMAC motor temp hot cutback 104 PMAC motor controller temp cutback 106 PMAC motor controller Undervoltage cutback 107 PMAC motor controller overvoltage cutback	ShutdownMotor ShutdownMainContactor ShutdownEMBrake ShutdownThrottle FullBrake	Motor characterization failed during characterization process.	Controller	

48	8-8	**Encoder Pulse Error**	ShutdownMotor ShutdownMainContactor ShutdownEMBrake ShutdownThrottle FullBrake	1. Encoder Steps parameter does not match the actual motor encoder. 2. Verify parameter settings: AC Motor Setup » Quadrature Encoder » Encoder Steps. 3. Motor loses IFO control, and motor increase rotation without throttle signal input.	Control ler	
49	8-9	**Parameter Out of Range** Fault Type(s): Reports the CAN Object ID	ShutdownMotor ShutdownMainContactor ShutdownEMBrake ShutdownThrottle FullBrake	1. Parameter value detected outside of the limits. 2. Use CIT to view the parameter's range and adjust the parameter’s value.	Control ler	
50	9-1	**Bad Firmware** Bad_Firmware	The controller does not start completely	The firmware in the controller is incorrect. 1. The CRC of the application or OS does not match. 2. The application was built with an incompatible OS version.	Control ler	
51	9-2	**EM Brake Failed To Set** EM_Brake_Failed_to_Set	ShutdownEMBrake ShutdownThrottle Activate the Interlock (EM Brake type 1).	1. Vehicle movement sensed after the EM Brake has been commanded to set. 2. EM Brake will not hold the motor from rotating.	Control ler	
52	9-3	**Encoder LOS** Encoder_LOS	LOS Mode	1. Limited Operating Strategy (LOS) control mode has been activated as a result of either an Encoder Fault (flash code 3-6) or a Stall Detected fault (flash code 7-3). 2. Motor encoder failure. 3. Bad crimps or faulty wiring. 4. Vehicle has stalled.	Control ler	
53	9-4	**Emer Rev Timeout** Emer_Rev_ Timeout	ShutdownThrottle ShutdownEMBrake	1. Emergency Reverse was activated and concluded because the EMR Timeout timer had expired. 2. The emergency reverse input is stuck On.	Control ler	
54	9-6	**Pump BDI** Pump_BDI	The pump is deactivated.	1. The BDI is below the Lift_BDI_ Lockout setting. 2. BDI parameters are mistuned.	Control ler	
55	9-9	**Parameter Mismatch** Fault Type(s): 1. Dual Drive is enabled in	ShutdownMotor ShutdownMainContactor ShutdownEMBrake	1. Incorrect position feedback type chosen for motor technology in use.	Control ler	

		torque mode. 2. SPMSM motor feedback selected the encoder. 3. AC motor selected sine-cosine.	ShutdownThrottle FullBrake	2. Dual drive is enabled in torque mode. 3. Dual drive enabled on only one controller.		
56	9-A	**Interlock Braking Supervision** Fault Type(s): 1. MotorSpeed did not ramp down fast enough to meet configuration 2. Vehicle brought to stop, but then EM brake (if configured) failed to set. 3. Vehicle brought to stop, but then traversed a distance beyond that set by Interlock_ Brake_ Supervision_ Position_ Settling_Limit.	ShutdownMotor ShutdownEMBrake ShutdownMainContactor	1. During interlock braking, motor speed exceeds the parameters set under Interlock Braking Supervision 2. See Programmer / Application Setup / Interlock Braking / Supervision Enable. 3. See Programmer / Application Setup / Interlock Braking / Interlock Braking Supervision	Control ler	
57	9-B	**EMR Supervision** Emr_Supervision	ShutdownMotor ShutdownEMBrake ShutdownMainContactor	1. During interlock braking, motor speed exceeds the parameters set under Interlock Braking Supervision 2. See Programmer / Application Setup / Emergency Reverse / Emergency Reverse Supervision.	Control ler	
58	A-1	**Driver 1 Fault** Fault Type(s): 1. Driver short circuit 2. Driver current exceeded configured over-current limits 3. Open/short circuit (Voltage measured high, should be low) 4. Open/short circuit (Voltage measured low, should be high) 5. Broken wire 6. No current of the output limit Fault types 3-5 are only checked if driver checks are enabled	ShutdownDriver1	1. Open or short on driver load. 2. Dirty connector pins at controller or contactor coil. 3. Bad connector crimps or faulty wiring. 4. Driver overcurrent, as set by the Driver 1 Overcurrent parameter. 5. See Programmer » Controller Setup » Outputs » Driver 1 » Driver 1 Overcurrent.	Control ler	

59	A-2	**Driver 2 Fault** Fault Type(s): 1. Driver short circuit 3. Driver current exceeded configured over-current limits 3. Open/short circuit (Voltage measured high, should be low) 4. Open/short circuit (Voltage measured low, should be high) 5. Broken wire 6. No current of the output limit Fault types 3-5 are only checked if driver checks are enabled	ShutdownDriver2	1.Open or short on driver load. 2.Dirty connector pins at controller or contactor coil. 3.Bad connector crimps or faulty wiring. 4.Driver overcurrent, as set by the Driver 2 Overcurrent parameter. 5. See Programmer » Controller Setup » Outputs » Driver 2 » Driver 2 Overcurrent.	Controller	
60	A-3	**Driver 3 Fault** Fault Type(s): 1. Driver short circuit 4. Driver current exceeded configured over-current limits 3. Open/short circuit (Voltage measured high, should be low) 4. Open/short circuit (Voltage measured low, should be high) 5. Broken wire 6. No current of the output limit Fault types 3-5 are only checked if driver checks are enabled	ShutdownDriver3	1.Open or short on driver load. 2.Dirty connector pins at controller or contactor coil. 3.Bad connector crimps or faulty wiring. 4.Driver overcurrent, as set by the Driver 3 Overcurrent parameter. 5. See Programmer » Controller Setup » Outputs » Driver 3 » Driver 3 Overcurrent.	Controller	
61	A-4	**Driver 4 Fault** Fault Type(s): 1. Driver short circuit 5. Driver current exceeded configured over-current limits 3. Open/short circuit (Voltage measured high, should be low) 4. Open/short circuit (Voltage measured low, should be high)	ShutdownDriver4	1.Open or short on driver load. 2.Dirty connector pins at controller or contactor coil. 3.Bad connector crimps or faulty wiring. 4.Driver overcurrent, as set by the Driver 4 Overcurrent parameter. 5. See Programmer » Controller Setup » Outputs » Driver 4 » Driver 4 Overcurrent.	Controller	

		5. Broken wire 6. No current of the output limit Fault types 3-5 are only checked if driver checks are enabled				
62	A-5	**Driver 5 Fault** Fault Type(s): 1. Driver short circuit 6. Driver current exceeded configured over-current limits 3. Open/short circuit (Voltage measured high, should be low) 4. Open/short circuit (Voltage measured low, should be high) 5. Broken wire 6. No current of the output limit Fault types 3-5 are only checked if driver checks are enabled	ShutdownDriver5	1.Open or short on driver load. 2.Dirty connector pins at controller or contactor coil. 3.Bad connector crimps or faulty wiring. 4.Driver overcurrent, as set by the Driver 5 Overcurrent parameter. 5. See Programmer » Controller Setup » Outputs » Driver 5 » Driver 5 Overcurrent.	Controller	85
63	A-6	**Driver 6 Fault** Fault Type(s): 1. Driver short circuit 7. Driver current exceeded configured over-current limits 3. Open/short circuit (Voltage measured high, should be low) 4. Open/short circuit (Voltage measured low, should be high) 5. Broken wire 6. No current of the output limit Fault types 3-5 are only checked if driver checks are enabled	ShutdownDriver6	1.Open or short on driver load. 2.Dirty connector pins at controller or contactor coil. 3.Bad connector crimps or faulty wiring. 4.Driver overcurrent, as set by the Driver 6 Overcurrent parameter. 5. See Programmer » Controller Setup » Outputs » Driver 6 » Driver 6 Overcurrent.	Controller	86
64	A-7	**Driver 7 Fault** Fault Type(s): 1. Driver short circuit 8. Driver current exceeded configured over-current limits	ShutdownDriver7	1.Open or short on driver load. 2.Dirty connector pins at controller or contactor coil. 3.Bad connector crimps or faulty wiring.	Controller	

		3. Open/short circuit (Voltage measured high, should be low) 4. Open/short circuit (Voltage measured low, should be high) 5. Broken wire 6. No current of the output limit Fault types 3-5 are only checked if driver checks are enabled		4.Driver overcurrent, as set by the Driver 7 Overcurrent parameter. 5. See Programmer » Controller Setup » Outputs » Driver 7 » Driver 7 Overcurrent.		
65	A-8	**Driver Assignment** Fault Type(s): 5 Driver number that caused the fault.	ShutdownDriver	1. A Driver Output is used for two or more functions. 2. See Programmer » Controller Setup » IO Assignments » Coil Drivers: Main Contactor Driver EM Brake Driver Hydraulic Contactor Driver	Controller	
66	A-9	**Coil Supply** Coil_Supply_Fault Fault Type(s): 1. Short to B- or hardware fault. 2. Driver short-circuit causes coil open circuit. 3. Coil Supply startup enable check failed. 4. Coil Supply startup disable check failed.	ShutdownAll:	1. Short on driver loads. 2. Dirty connector pins at controller or device. 3. Bad connector crimps or faulty wiring. 4. Controller is defective.	Controller	
67	B-1	**ANALOG 1 OUT OF RANGE** Analog_ 1_Out_Of_Range Fault Type(s): 1. Above High limit. 2. Below Low limit.	<u>Fault Action:</u> None, unless a fault action is programmed in VCL.	1. Analog 1 input voltage is above the parameter setting of Analog 1 High. 2. Analog 1 input voltage is below the parameter setting of Analog 1 Low. 3. See Programmer » Controller Setup » Inputs » Analog 1. 4. See Programmer » Controller Setup » Inputs » Configure » Analog 1 Low / Analog 1 High.	Controller	

68	B-2	**ANALOG 2 OUT OF RANGE** Analog_ 2_Out_Of_Range Fault Type(s): 1. Above High limit. 2. Below Low limit.	See Analog 1 Out of Range.	See Analog 1 Out of Range.	Control ler	
69	B-3	**ANALOG 3 OUT OF RANGE** Analog_ 3_Out_Of_Range Fault Type(s): 1. Above High limit. 2. Below Low limit.	See Analog 1 Out of Range.	See Analog 1 Out of Range.	Control ler	
70	B-4	**ANALOG 4 OUT OF RANGE** Analog_ 4_Out_Of_Range Fault Type(s): 1. Above High limit. 2. Below Low limit.	See Analog 1 Out of Range.	See Analog 1 Out of Range.	Control ler	
71	B-5	**ANALOG 5 OUT OF RANGE** Analog_ 5_Out_Of_Range Fault Type(s): 1. Above High limit. 2. Below Low limit.	See Analog 1 Out of Range.	See Analog 1 Out of Range.	Control ler	
72	B-6	**ANALOG 6 OUT OF RANGE** Analog_ 6_Out_Of_Range Fault Type(s): 1. Above High limit. 2. Below Low limit.	See Analog 1 Out of Range.	See Analog 1 Out of Range.	Control ler	
73	B-7	**ANALOG 7 OUT OF RANGE** Analog_ 7_Out_Of_Range Fault Type(s): 1. Above High limit. 2. Below Low limit.	See Analog 1 Out of Range.	See Analog 1 Out of Range.	Control ler	
74	B-8	**ANALOG 8 OUT OF RANGE** Analog_ 8_Out_Of_Range Fault Type(s): 1. Above High limit. 2. Below Low limit.	See Analog 1 Out of Range.	See Analog 1 Out of Range.	Control ler	
75	B-9	**ANALOG 9 OUT OF RANGE** Analog_ 9_Out_Of_Range	See Analog 1 Out of Range.	See Analog 1 Out of Range.	Control ler	

		Fault Type(s): 1. Above High limit. 2. Below Low limit.				
76	B-B	**ANALOG 14 OUT OF RANGE** Analog_ 14_Out_Of_Range Fault Type(s): 1. Above High limit. 2. Below Low limit.	See Analog 1 Out of Range.	See Analog 1 Out of Range.	Controller	
77	B-C	**Analog Assignment** Analog_Assignment Fault Type(s): 9 Analog Input number that caused the fault.	Fault Action: None, unless a fault action is programmed in VCL.	1. An Analog input is used for two or more functions. 2. An Analog input is outside the range of analog inputs. 3. See Programmer » Controller Setup » IO Assignments » Controls	Controller	
78	B-D	**ANALOG 18 OUT OF RANGE** Analog_ 18_Out_Of_Range Fault Type(s): 1. Above High limit. 2. Below Low limit.	See Analog 1 Out of Range.	See Analog 1 Out of Range.	Controller	
79	B-E	**ANALOG 19 OUT OF RANGE** Analog_ 19_Out_Of_Range Fault Type(s): 1. Above High limit. 2. Below Low limit.	See Analog 1 Out of Range.	See Analog 1 Out of Range.	Controller	
80	C-1	**Branding Error** Branding_Error	ShutdownMotor ShutdownMainContactor ShutdownEMBrake ShutdownThrottle FullBrake	1. Software and hardware branding mismatch. 2. For technical support on this fault, contact the Curtis distributor where you obtained your controller or the Curtis sales-support office in your region.	Controller	
81	C-2	**BMS Cutback** BMS_Cutback Fault Type(s): 1. Battery Current Cutback. 2. Low Cell Cutback. 3. High Cell Cutback.	Set: See Fault Type Clear: Resolve battery or battery cell issue.	A cutback based on cell loading has occurred.	Battery	
82	C-5	**PWM Input 10 Out of Range** PWM_Input_	See Analog 1 Out of Range.	See Analog 1 Out of Range.	Controller	

		10_Out_Of_Range				
83	C-7	**ANALOG 31 OUT OF RANGE** Analog_ 31_Out_Of_Range Fault Type(s): 1. Above High limit. 2. Below Low limit.	See Analog 1 Out of Range.	See Analog 1 Out of Range.	Controller	
84	C-8	**Invalid_CAN_Port**	NO ACTION	1. Mistuned Dual Drive CAN parameters. 2. Conflicting CAN Node IDs for Dual Drive.	Controller	
85	C-9	**VCL Watchdog**	NO ACTION	See the associated VCL Functions, • Set_ Watchdog_ Timeout(). • Set_Watchdog_Fault_Action(). • Kick_ Watchdog().	Controller	
86	C-B	**PWM Input 28 Out of Range** PWM_Input_28_Out_of_Range Fault Type(s): 1. The input is disconnected. 2. The measured input frequency is below the (PWM_Input_28_Low_ Frequency) – (PWM_Input_28_Frequency_ Fault_ Tolerance). 3. The measured input frequency is above the (PWM_ Input_28_High_Frequency) + (PWM_Input_28_Frequency_ Fault_ Tolerance). 4. The measured duty cycle is below set limits, (PWM_ Input_28_Low_Duty_Cycle) – (PWM_Input_28_Duty_ Cycle_ Fault_ Tolerance). 5. The measured duty cycle is above set limits, (PWM_ Input_28_High_Duty_Cycle)	<u>Fault Action:</u> None, unless a fault action is programmed in VCL.	1. This fault diagnostic execution cycles every 4msec. The input is considered disconnected if no PWM signal occurs for 16msec or the measurements are not updated every 16msec. 2. Mistuned parameters. 3. Faulty wiring.	Controller	

		+ (PWM_Input_28_Duty_ Cycle_Fault_ Tolerance).				
87	C-C	**PWM Input 29 Out of Range** PWM_Input_29_Out_of_Range Fault Type(s): 1. The input is disconnected. 2. The measured input frequency is below the (PWM_Input_29_Low_ Frequency) – (PWM_ Input_29_Frequency_ Fault_ Tolerance). 3. The measured input frequency is above the (PWM_Input_29_High_ Frequency) + (PWM_ Input_29_Frequency_Fault_ Tolerance). 4 = The measured duty cycle is below set limits, (PWM_Input_29_Low_Duty_ Cycle) – (PWM_Input_29_Duty_Cycle _Fault_ Tolerance). 5 = The measured duty cycle is above set limits, (PWM_ Input_29_High_Duty_Cycle) + (PWM_Input_29_Duty_ Cycle_Fault_ Tolerance).	<u>Fault Action:</u> None, unless a fault action is programmed in VCL.	1. This fault diagnostic execution cycles every 4msec. The input is considered disconnected if no PWM signal occurs for 16msec or the measurements are not updated every 16msec. 2. Mistuned parameters. 3. Faulty wiring.	Control ler	
88	C-D	**Primary State Error** Primary_State_Error Fault Type(s): These are internal issues either occurring during startup, parameter initialization, secondary micro update or other runtime issues. 1. PRIMARY_DEVICE_ STARTUP = 0, 2 = PRIMARY_WAIT_KSI_ STABLE,	NO_ACTION (controller is not operable)	Set: Internal error with the controller. Kindly reset controller. Clear: Reset controller	Control ler	

		3 = PRIMARY_DEVICE_ STARTUP_ VALID, 4 = PRIMARY_INITIALIZE_ PARAMETERS, 5 = PRIMARY_WAIT_FOR_ FIRST_SIGNALS, 6 = PRIMARY_WAIT_FOR_ SUPERVISOR, 7 = PRIMARY_RESTORE_ PARAMETER_FAIL, 8 = PRIMARY_SUPERVISOR_ FIRST_ SIGNALS_ERROR, 9 = PRIMARY_SUPERVISOR_ STARTUP_ERROR, 10 = PRIMARY_STARTUP_ TIMER_ FAILURE, 11 = PRIMARY_WAIT_CAN_ HANDSHAKING_DONE, 12 = PRIMARY_RUNNING				
89	D-1	**Lift Input Fault** Lift_Input	ShutdownLift	The associated fault diagnostic with the assigned lift-input source triggers this fault. For example: If the Lift_Input_Source is an analog input, then any faults detected by the respective Input fault diagnostics are cascaded and reported within this fault code. Set: Faults from the respective/ assigned “Lift_Input_Source” are cascaded and reported. Clear: Resolve any input assignment conflict, or out of range faults, then Reset Controller.	Control ler	
90	D-2	**Phase PWM Mismatch** Phase_PWM_Mismatch Fault Type(s): 0 = U phase. 1 = V phase. 2 = W phase.	ShutdownMotor ShutdownMainContactor ShutdownEMBrake ShutdownThrottle FullBrake ShutdownPump	Set: The difference between the commanded phase PWM duty cycle and the measured is greater than allowed. Clear: Reset Controller.	Control ler	

91	D-3	**Hardware Compatibility** Hardware_Compatibility	ShutdownMotor ShutdownMainContactor ShutdownEMBrake ShutdownThrottle FullBrake ShutdownPump	The OS (device profile, .cdev file) is incompatible with the controller. The loaded software (.cdev) is not compatible with the controller hardware.	Controller	
92	D-4	**Lower Input Fault** Lower_Input	ShutdownLower	The associated fault diagnostic with the assigned lift-input source triggers this fault. For example: If the Lift_Input_Source is an analog input, then any faults detected by the respective Input fault diagnostics are cascaded and reported within this fault code. Set: Faults from the respective/ assigned “Lift_Input_Source” are cascaded and reported. Clear: Resolve any input assignment conflict, or out of range faults, then Reset Controller.	Controller	
93	D-6	**Hazardous Movement** Hazardous_Movement Fault Type(s): 1 = The motor speed is in the opposite direction of the speed request and the motor fails to accelerate in the correct direction for a programmed time. In the event of a change to neutral, this hazard will be detected if the motor fails to accelerate toward zero speed for a programmed time. 2 = The acceleration is in the opposite direction of the difference between the operator speed request and the motor speed. The speed in the commanded direction is greater than the commanded speed by more	ShutdownInterlock	Set: This fault detects hazardous movement when the motor is requested to be moving. The first hazard is a motor that is not able to slow down if the throttle goes to zero or the direction switch is not in the direction of travel. The second hazard is a motor that accelerates the wrong way or goes too fast. Note: This fault only occurs when the Control Mode Select is in Speed_Mode, Speed_Mode_ Express, or Servo_Mode. Clear: Reset Controller. Setting Hazardous_Direction_ Response_ Time = 0 will disable these checks	Controller	

		than a parameter (Hazardous_Speed) for a programmed time (Hazardous_ Throttle_ Response_ Time).				
94	D-D	**IMU Failure** IMU_Failure Fault Type(s): 1. SPI Communication Failure 2. Curtis Factory Self Test Failure 3. Run Time Check Failure, bad data received from the IMU 4. Gyro Cal out of range, maximum calibration offset exceeded.	NO_ACTION	Check if configured correctly or the vehicle is moving when calibrating. Set: Internally set as per fault type. Clear: Cycle KSI	Controller	

OEM Faults-OEM (TRACTION CONTROLLER)

No.	FAULT NAME	FLASH CODE	FAULT ACTIONS	POSSIBLE CAUSES SET/CLEAR CONDITIONS	FAILT CAUSE
1	Arm PDo Timeout Fault	5-1	ShutdownMotor ShutdownMainContactor ShutdownEMBrake ShutdownThrottle FullBrake	Check control handle.	Controller
2	1220 Shutdown Fault	5-2	Nosteering ShutdownMotor ShutdownMainContactor ShutdownEMBrake ShutdownThrottle FullBrake	1. The controller short circuit or controller failure, replace the controller; 2. Steering motor stall, defective motor or wire; 3. Controller parameter failure.	Controller
3	1220 Limit Fault	5-3	Nosteering	1. The controller short circuit or controller failure, replace the controller; 2. Steering motor stall, defective motor or wire; 3. Controller parameter failure.	Controller

4	VCL HPD Fault	5-4	ShutdownMotor ShutdownMainContactor ShutdownEMBrake ShutdownThrottle FullBrake	Throttle signal comes first, operate in the correct order	Controller
5	VCL SRO Fault	5-5	ShutdownMotor ShutdownMainContactor ShutdownEMBrake ShutdownThrottle FullBrake	Throttle signal comes first, operate in the correct order	Controller
6	Display Config Fault	5-6	ShutdownMotor ShutdownMainContactor ShutdownEMBrake ShutdownThrottle FullBrake	Check the display configuration.	Controller
7	BMS Fault Grade NonZero	5-7	ShutdownMotor ShutdownMainContactor ShutdownEMBrake ShutdownThrottle FullBrake	Check the battery.	Battery
8	Remote pdo timeout	5-8	ShutdownMotor ShutdownMainContactor ShutdownEMBrake ShutdownThrottle FullBrake	Clear communication problems with the controller (matching, protocol, line, etc.)	Controller
9	Steer angle changed	5-9	ShutdownMotor ShutdownMainContactor ShutdownEMBrake ShutdownThrottle FullBrake	Switch the 180/360 angle mode, restart the key switch after the fault is eliminated and switch to the corresponding angle mode	Controller
10	BMS Temp LOW fault	5-A	ShutdownMotor ShutdownMainContactor ShutdownEMBrake ShutdownThrottle FullBrake	Check the battery.	Battery
11	Redundance Check Fault	5-B	ShutdownMotor ShutdownMainContactor ShutdownEMBrake ShutdownThrottle FullBrake		Controller
12	Battery type mismatch	5-C	ShutdownMotor ShutdownMainContactor ShutdownEMBrake ShutdownThrottle FullBrake	Choose the right battery type.	Battery

13	Wrong 3401 Model	5-D	ShutdownMotor ShutdownMainContactor ShutdownEMBrake ShutdownThrottle FullBrake	Choose the right display type.	Display
14	Not Curtis Display	5-E	ShutdownMotor ShutdownMainContactor ShutdownEMBrake ShutdownThrottle FullBrake	Check the display.	Controller
15	Pump Handshake Fau lt	5-F	ShutdownMotor ShutdownMainContactor ShutdownEMBrake ShutdownThrottle FullBrake	Clear communication problems with the controller (matching, protocol, line, etc.)	Controller
16	PDO Timeout BMS	6-2	ShutdownMotor ShutdownMainContactor S hutdownEMBrake ShutdownThrottle FullBrake	Check the battery and commu nication.	Battery
17	BMS Temp High fault	6-3	ShutdownMotor ShutdownMainContactor ShutdownEMBrake ShutdownThrottle FullBrake	Check the battery.	Battery
18	BMS low AH	6-4	NO_ACTION	Charging is required.	Battery
19	BMS voltage differenc e	6-5	ShutdownMotor ShutdownMainContactor S hutdownEMBrake ShutdownThrottle FullBrake	Check the battery.	Battery
20	BMS Severe Overvolt age	6-6	ShutdownMotor ShutdownMainContactor ShutdownEMBrake ShutdownThrottle FullBrake	Check the battery.	Battery
21	BMS Undervoltage	6-7	ShutdownMotor ShutdownMainContactor ShutdownEMBrake ShutdownThrottle FullBrake	Check the battery.	Battery
22	Throttle Pedal SRO F ault	6-B	ShutdownMotor ShutdownMainContactor ShutdownEMBrake ShutdownThrottle	Throttle signal comes first, op erate in the correct order	Throttle

			FullBrake		
23	Display Config Fault	6-D	ShutdownMotor ShutdownMainContactor ShutdownEMBrake ShutdownThrottle FullBrake	Check the display.	Display

OEM Faults-OEM (PUMPCONTROLLER)

No.	FAULT NAME	FLASH CODE	FAULT ACTIONS	POSSIBLE CAUSES SET/CLEAR CONDITIONS	FAILT CA USE
1	Pump_SRO_Fault	5-1	ShutdownMotor ShutdownMainContactor ShutdownEMBrake ShutdownThrottle FullBrake ShutdownThrottle ShutdownPump	Follow the correct operation s equence.	Controller
2	Lift_Pot_Open_Fault	5-2	ShutdownMotor ShutdownMainContactor ShutdownEMBrake ShutdownThrottle FullBrake ShutdownThrottle ShutdownPump	Check the lifting sensor.	Controller
3	Arm_PDO_Fault	5-3	ShutdownMotor ShutdownMainContactor ShutdownEMBrake ShutdownThrottle FullBrake ShutdownThrottle ShutdownPump	Clear communication problems with the controller (matching, protocol, line, etc.)	Controller
4	PDO Fault 1353	5-5	ShutdownMotor ShutdownMainContactor ShutdownEMBrake ShutdownThrottle FullBrake ShutdownThrottle ShutdownPump	Check 1353 communications.	Controller

5	VCL Run Time Error	6-8	ShutdownMotor ShutdownMainContactor ShutdownEMBrake ShutdownThrottle ShutdownInterlockSwitch ShutdownDriver1-5 ShutdownPD FullBrake ShutdownThrottle ShutdownPump	1. Runtime errors are defined using the VCL Error Module and VCL Error. See the System Information file: • Curtis Integrated Toolkit™ » VCL Studio » Help » System Information. 2. Using driver control commands in VCL can lead to VCL runtime errors if the VCL command and the driver assignment do not match.	Controller

Troubleshooting chart of 1222 controller (steering)

No.	FLASH CODE	SUB CODE	FAULT NAME	POSSIBLE CAUSE	CLEAR CONDITION	STEER FAULT ACTION
1	B	1	Hardware Fault	An internal hardware error has been detected; controller defective.	Cycle KSI.	Shutdown.
2	C	1	Controller Overcurrent	1. External short of phase U, V, or W motor connection. 2. Motor parameters are mis-tuned. 3. Controller defective.	Cycle KSI.	Shutdown.
3	D	1	Current Sensor Fault	1. Leakage to vehicle frame from phase U, V, or W (short in motor stator). 2. Controller defective.	Cycle KSI.	Shutdown.
4	E	1	Precharge	1. External load on capacitor bank (B+ connection terminal) that prevents the capacitor bank from charging. 2. Controller defective.	Cycle KSI.	Shutdown.
5	F	1	Controller Severe Undertemp	Controller is operating in an extreme environment.	Bring heatsink temp above -35℃.	Warning Only.
6	10	1	Controller Severe Overtemp	1. Improper mounting of controller. 2. Excessive load on vehicle. 3. Controller is operating in an extreme environment.	Cycle KSI.	Warning then Shutdown.
7	11	1	Severe	1. Battery or battery cables or	Cycle KSI.	Shutdown.

			Undervoltage	battery connections defective. 2. Excessive non-controller system drain on battery. 3. Battery disconnected while driving. 4. Blown B+ fuse or steer contactor did not close.		
8	12	1	Severe Overvoltage	1. Battery or battery cable resistancetoo high for a given regen current. 2. Battery disconnected while regen braking.	Cycle KSI.	Shutdown.
9	16	1	Controller Overtemp	1. Improper mounting or cooling of controller. 2. Excessive load on vehicle. 3. Controller operating in an extreme environment.	Heatsink temp ＜85℃	Warning Only.
10	19	1	5V Supply Failure	External load impedance on the +5V supply is too low.	Cycle KSI.	Hold then Shutdown.
11	1A	1	10V Supply Failure	External load impedance on the +10V supply is too low.	Cycle KSI.	Warning then Shutdown.
12	1B	1	Severe Motor Over Temp	1. Motor is operating in an extreme environment. 2. Motor Temperature Control parameters are mis-tuned.	Cycle KSI.	Warning then Shutdown.
13	1C	1	Motor Temp Hot Cutback	1. Motor is operating in an extreme environment. 2. Motor Temperature Control parameters are mis-tuned.	Steer motor temperature <programmed Temperature Hot.	Warning Only.
14	1D	1	Motor Temp Sensor Fault	1. Motor thermistor is not connected properly. 2. If the application does not use a motor thermistor, the Motor Temperature Sensor Enable parameter should be programmed Off.	Motor temperature input within the normal operating range.	Warning Only.
15	1F	1	Contactor Open/Short	1. Open or short on driver load. 2. Dirty connector pins. 3. Bad crimps or faulty wiring.	Cycle KSI.	Warning then Shutdown.
16	23	1	Fault Output Open/Short	1. External load impedance on the fault output is too low. 2. Controller defective.	Cycle KSI.	Warning then Shutdown.

17	24	1	Motor Stalled	1. Stalled steer motor. 2. Steer motor encoder failure. 3. Bad crimps or faulty wiring. 4. Problems with power supply of the steer motor encoder.	Cycle KSI.	Warning then Shutdown.
18	25	1	Motor Open	1. Motor phase is open. 2. Bad crimps or faulty motor cable wiring. 3. Controller defective.	Cycle KSI.	Warning then Shutdown.
19	26	1	Contactor Welded	1. Steer contactor tips are welded closed. 2. An alternative voltage path (such as an external precharge resistor) is providing a current to the capacitor bank (B+ terminal).	Cycle KSI.	Shutdown.
20	27	1	Contactor Opened	1. Steer contactor was closed temporarily, but then opened. 2. Steer contactor tips are oxidized. 3. An external load on the capacitor bank (B+ terminal) that prevents the bank from charging.		Warning then Shutdown.
21	27	2	Contactor Did Not Close	1. Steer contactor did not close. 2. Steer contactor tips are oxidized. 3. An external load on the capacitor bank (B+ terminal) that prevents the bank from charging.	Cycle KSI.	Shutdown.
22	29	1	Command Analog 1 Out of Range	Command input device's Analog 1 input (pin 8) is out of range.	Cycle KSI.	Hold then Shutdown.
23	2A	1	Command Analog 3 Out of Range	Command input device's Analog 3 input (pin 19) is out of range.	Cycle KSI.	Hold then Shutdown.
24	2B	1	Feedback Analog 5 Out of Range	Position feedback device's Analog 5 input (pin 16) is out of range.	Cycle KSI.	Hold then Shutdown.
25	2C	1	Feedback Analog 6 Out of Range	Position feedback device's Analog 6 input (pin 17) is out of range.	Cycle KSI.	Hold then Shutdown.
26	2D	1	CANNot Operational	1222 CAN NMT State did not go operational within 80 ms of	Cycle KSI.	Warning and drop

				interlock being applied.		fault output.
27	2E	1	EEPROM CRC Fault	1. New software loaded into EEPROM memory. 2. Try using function “Restore to Factory Defaults” to clear fault. 3. Controller defective.	Cycle KSI.	Shutdown.
28	2F	1	Sin/Cos command sensor	1. Sin/Cos Sensor defective. 2. Sin/Cos Sensor parameters are mis-tuned.	Cycle KSI.	Hold then Shutdown.
29	2F	2	Sawtooth Command Sensor	1. Sawtooth Sensor defective. 2. Sawtooth Sensor parameters are mis-tuned.	Cycle KSI.	Hold then Shutdown.
30	30	1	Sin/Cos Feedback sensor	3. Sin/Cos Sensor defective. 4. Sin/Cos Sensor parameters are mis-tuned.	Cycle KSI.	Hold then Shutdown.
31	30	2	Sawtooth Feedback Sensor	1. Sawtooth Sensor defective. 2. Sawtooth Sensor parameters are mis-tuned.	Cycle KSI.	Hold then Shutdown.
32	31	1	Parameter Change Fault	A parameter value or the software was changed that required a power cycle. This fault is set automatically to force he vehicle operator to cycle power, for safety purposes.	Cycle KSI.	Shutdown.
33	33	1	Interlock Switch Supervision	1. When the interlock switch inputs are a crossed configuration (N.O. and N.C.), the two inputs are checked. A fault is set if Switch 1 (pin 9) = Switch 3 (pin 11). 2. Interlock switch defective.	Interlock Input 1 <> Interlock Input 3.	Interlock=Off.
34	34	1	Home Switch Supervision	1. When the wheel position is not close to home, the redundant home switch inputs are checked and a fault s set if they disagree. 2. Home switch defective. 3. For 360° steering, parameter Homing Cam Angle (deg) not set correctly	Cycle KSI.	Warning then Shutdown.
35	35	1	Home Position Not Found	Home switch defective.	Cycle KSI.	Shutdown.

36	36	1	Home reference Tolerance Fault	1. Home switch defective. 2. For 360° steering, parameter Homing Cam Angle (deg) not set correctly	Cycle KSI.	Warning then Shutdown.
37	37	1	Steer Command Supervision	Command input device defective.	Cycle KSI.	Hold then Shutdown.
38	38	1	Wheel Position Supervision	Position feedback device defective.	Cycle KSI.	Hold then Shutdown.
39	45	1	5V Current Out of Range	The external load on the 5V supply is drawing either too much or too little current.	Cycle KSI.	Hold then Shutdown.
40	47	1	Software Fault 1	Reserved for future use.		
41	47	2	Software Fault 2	1. Software defective. 2. Controller defective.	Cycle KSI.	Shutdown.
42	47	3	Software Fault 3	Reserved for future use.		
43	47	4	Software Fault 4	1. Software defective. 2. Controller defective.	Cycle KSI.	Shutdown.
44	47	5	Software Fault 5	1. Software defective. 2. Controller defective.	Cycle KSI.	Shutdown.
45	48	1	PDO1 Timeout	Communication between the traction controller and the 1222 has halted.	Cycle KSI.	Warning then Shutdown.
46	48	2	PDO2 Timeout	Communication from the CAN device sending the PDO2 message to the 1222 has halted.	Cycle KSI.	Warning then Shutdown.
47	48	3	PDO3 Timeout	Communication from the CAN device sending the PDO3 message to the 1222 has halted.	Cycle KSI.	Warning then Shutdown.
48	48	4	PDO4 Timeout	Communication from the CAN device sending the PDO4 message to the 1222 has halted.	Cycle KSI.	Warning then Shutdown.
49	49	1	Following Error	1. Position feedback device defective. 2. Steer motor stalled. 3. Steer motor encoder failed.	Cycle KSI.	Warning then Shutdown.
50	4A	1	Hardware Software Mismatch	1. New software loaded. 2. Controller hardware cannot use the loaded software.	Cycle KSI.	Shutdown.
51	4B	1	Parameter Conflict	1. Parameter settings are in conflict with each other. 2. Parameter setting out of range.	Cycle KSI.	Shutdown.

13. DECLARATION OF CONFORMITY (VALID FOR SALE IN EU)

GB] Original CE Declaration of conformity
The signatory hereby declares that the specified machine conforms to the EC Directive 2006/42/EC (Machine Directive), and 2014/30/EU (Electro-Magnetic Compatibility, EMC) including their amendments as translated into national legislation of the member countries. The signatory is individually authorized to compile the technical documents and declares that the following standards, including the normative procedures contained therein, have been applied:

[D] Original EG- Konformitätserklärung
Der Unterzeichner erklärt hiermit, dass die angegebene Maschine den EG-Richtlinien 2006/42/EG (Maschinenrichtlinie) und 2014/30/EU (Elektromagnetische Verträglichkeit, EMV) einschließlich ihrer Änderungen in der Umsetzung in die nationale Gesetzgebung der Mitgliedsländer entspricht. Der Unterzeichner ist zur Zusammenstellung der technischen Unterlagen einzeln befugt und erklärt, dass folgende Normen, einschließlich der darin enthaltenen normativen Verfahren, angewendet wurden:

[E] Original DECLARACIóN DE CONFORMIDAD CE
El signatario declara por la presente que la máquina especificada cumple con la Directiva CE 2006/42/EC (Directiva de Máquinas) y 2014/30/EU (Compatibilidad Electromagnética, EMC) incluidas sus enmiendas traducidas a la legislación nacional de los países miembros. El firmante está autorizado individualmente para compilar los documentos técnicos y declara que se han aplicado los siguientes estándares, incluidos los procedimientos normativos contenidos en ellos:

[F] Originale DECLARATION DE CONFORMITE CE
Le signataire déclare par la présente que la machine spécifiée est conforme à la directive CE 2006/42/CE (directive machine) et 2014/30/UE (compatibilité électromagnétique, CEM), y compris leurs modifications telles que traduites dans la législation nationale des pays membres. Le signataire est individuellement autorisé à compiler les documents techniques et déclare que les normes suivantes, y compris les procédures normatives qu'elles contiennent, ont été appliquées:

[NL] Origineel EG-CONFORMITEITSVERKLARING
De ondertekenaar verklaart hierbij dat de gespecificeerde machine voldoet aan de EG-richtlijnen 2006/42/EG (machinerichtlijn) en 2014/30/EU (elektromagnetische compatibiliteit, EMC) inclusief hun amendementen zoals vertaald in de nationale wetgeving van de aangesloten landen. De ondertekenaar is individueel gemachtigd om de technische documenten samen te stellen en verklaart dat de volgende normen, inclusief de normatieve procedures die daarin zijn opgenomen, zijn toegepast:

[P] Original DECLARAÇÃO DE CONFORMIDADE CE
O signatário declara que a máquina especificada está em conformidade com a Diretiva EC 2006/42/EC (Diretiva de Máquinas) e 2014/30/EU (Compatibilidade Eletromagnética, EMC), incluindo suas emendas traduzidas para a legislação nacional dos países membros. O signatário está individualmente autorizado a compilar os documentos técnicos e declara que as seguintes normas, incluindo os procedimentos normativos neles contidos, foram aplicadas:

[I] Originale DICHIARAZIONE DI CONFORMITÀ CE
Il firmatario dichiara che la macchina specificata è conforme alla Direttiva CE 2006/42/CE (Direttiva macchine) e 2014/30/UE (Compatibilità elettromagnetica, EMC) compresi i relativi emendamenti tradotti nella legislazione nazionale dei paesi membri. Il firmatario è autorizzato individualmente alla compilazione dei documenti tecnici e dichiara che sono state applicate le seguenti norme, comprese le procedure normative ivi contenute:

[BG] Оригинален ЕВРОПЕЙСКА ОБЩНОСТ - ДЕКЛАРАЦИЯ ЗА СЪОТВЕТСТВИЕ
С настоящото подписалото лице декларира, че посочената машина отговаря на Директива на ЕО 2006/42/EC (Директива за машини) и 2014/30/EU (Електромагнитна съвместимост, EMC), включително техните изменения, преведени в националното законодателство на страните-членки. Подписалото лице е лично упълномощено да съставя техническите документи и декларира, че са приложени следните стандарти, включително съдържащите се в тях нормативни процедури:

[CZ] Originál EG - PROHLÁŠENÍ OSHODĚ
Signatář tímto prohlašuje, že uvedený stroj je ve shodě se směrnicí ES 2006/42/ES (Směrnice o strojích) a 2014/30/EU (Elektromagnetická kompatibilita, EMC) včetně jejich změn ve znění přeložené do národní legislativy členských zemí. Podepisující osoba je samostatně oprávněna sestavit technické dokumenty a prohlašuje, že byly použity následující normy, včetně normativních postupů v nich obsažených:

[DK] Original EF-OVERENSSTEMMELSESERKLÆRING
Underskriveren erklærer hermed, at den specificerede maskine er i overensstemmelse med EF-direktivet 2006/42/EC (maskindirektivet) og 2014/30/EU (elektro-magnetisk kompatibilitet, EMC) inklusive deres ændringer som oversat til national lovgivning i medlemslandene. Underskriveren er individuelt bemyndiget til at udarbejde de tekniske dokumenter og erklærer, at følgende standarder, inklusive de normative procedurer indeholdt deri, er blevet anvendt:

[EST] Originaal EL vastavusavaldus
Allakirjutanu kinnitab käesolevaga, et nimetatud masin vastab EÜ direktiivile 2006/42/EÜ (masinadirektiiv) ja 2014/30/EL (elektromagnetiline ühilduvus, EMC), sealhulgas nende muudatustele, nagu on tõlgitud liikmesriikide siseriiklikesse õigusaktidesse. Allakirjutanul on individuaalselt õigus koostada tehnilisi dokumente ja ta kinnitab, et on kohaldatud järgmisi standardeid, sealhulgas neis sisalduvaid normatiivprotseduure:

[FIN] Alkuperäinen EU-YHDENMUKAISUUSSELOSTUS
Allekirjoittaja vakuuttaa täten, että määritetty kone on EY-direktiivin 2006/42/EY (konedirektiivi) ja 2014/30/EU (sähkömagneettinen yhteensopivuus, EMC) mukainen, mukaan lukien niiden muutokset, sellaisina kuin ne on käännetty jäsenmaiden kansalliseen lainsäädäntöön. Allekirjoittaja on henkilökohtaisesti valtuutettu kokoamaan tekniset asiakirjat ja vakuuttaa, että seuraavia standardeja, mukaan lukien niihin sisältyvät normatiiviset menettelyt, on sovellettu:

[GR] Πρωτότυπο ΔΗΛΩΣΗΣΥΜΜΟΡΦΩΣΗΣΕΟΚ
Ο υπογράφοντος δηλώνει με το παρόν ότι το συγκεκριμένο μηχάνημα συμμορφώνεται με την Οδηγία 2006/42/ΕΚ (Οδηγία Μηχανών) και 2014/30/ΕΕ (Ηλεκτρομαγνητική Συμβατότητα, EMC) συμπεριλαμβανομένων των τροποποιήσεών τους όπως έχουν μεταφραστεί στην εθνική νομοθεσία των χωρών μελών. Ο υπογράφοντος είναι ατομικά εξουσιοδοτημένος να συντάξει τα τεχνικά έγγραφα και δηλώνει ότι έχουν εφαρμοστεί τα ακόλουθα πρότυπα, συμπεριλαμβανομένων των κανονιστικών διαδικασιών που περιέχονται σε αυτά:

[H] Eredeti EU KONFORMITÁSI NYILATKOZAT
Az aláíró ezennel kijelenti, hogy a megadott gép megfelel a 2006/42/EC (gépirányelv) és a 2014/30/EU (elektromágneses összeférhetőség, EMC) irányelveknek, beleértve azok módosításait a tagországok nemzeti jogszabályaiba lefordítva. Az aláíró egyénileg jogosult a műszaki dokumentumok összeállítására, és kijelenti, hogy a következő szabványokat, beleértve az abban foglalt normatív eljárásokat, alkalmazták:

[LT] Originalus ES atitikimo deklaracija
Pasirašęs asmuo pareiškia, kad nurodyta mašina atitinka EB direktyvą 2006/42/EB (mašinų direktyvą) ir 2014/30/ES (elektromagnetinį suderinamumą, EMC), įskaitant jų pakeitimus, išverstus į šalių narių nacionalinius teisės aktus. Pasirašęs asmuo yra individualiai įgaliotas rengti techninius dokumentus ir pareiškia, kad buvo taikomi šie standartai, įskaitant juose nurodytas normines procedūras:

[LV] Oriģināls ES atbilstības deklarācija
Parakstītājs ar šo apliecina, ka norādītā iekārta atbilst EK Direktīvai 2006/42/EK (Mašīnu direktīva) un 2014/30/ES (Elektromagnētiskā saderība, EMC), ieskaitot to grozījumus, kas ir tulkoti dalībvalstu nacionālajos tiesību aktos. Parakstītājs ir individuāli pilnvarots sastādīt tehniskos dokumentus un apliecina, ka ir piemēroti šādi standarti, tostarp tajos ietvertās normatīvās procedūras:

[N] Opprinnelig EU-KONFORMITETSERKLÆRING
Underskriveren erklærer herved at den spesifiserte maskinen er i samsvar med EC-direktivet 2006/42/EC (maskindirektivet), og 2014/30/EU (elektromagnetisk kompatibilitet, EMC) inkludert deres endringer som oversatt til nasjonal lovgivning i medlemslandene. Underskriveren er individuelt autorisert til å sammenstille de tekniske dokumentene og erklærer at følgende standarder, inkludert de normative prosedyrene som finnes deri, er brukt:

[PL] Oryginalny DEKLARACJA ZGODNOŚCI WE

Sygnatariusz niniejszym oświadcza, że określona maszyna jest zgodna z dyrektywą WE 2006/42/WE (dyrektywa maszynowa) i 2014/30/UE (kompatybilność elektromagnetyczna, EMC) wraz z ich poprawkami w tłumaczeniu na ustawodawstwo krajowe krajów członkowskich. Sygnatariusz jest indywidualnie upoważniony do sporządzania dokumentacji technicznej i oświadcza, że zastosowano następujące normy, w tym zawarte w nich procedury normatywne:

[RO] Original DECLARAŢIE DE CONFORMITATE CE

Semnatarul declară prin prezenta că mașina specificată este conformă cu Directiva CE 2006/42/CE (Directiva Mașini) și 2014/30/UE (Compatibilitate electro-magnetică, EMC), inclusiv amendamentele acestora, astfel cum au fost traduse în legislația națională a țărilor membre. Semnatarul este autorizat individual să întocmească documentele tehnice și declară că au fost aplicate următoarele standarde, inclusiv procedurile normative cuprinse în acestea:

[RUS] Оригинал Декларация соответствия стандартам ЕС

Настоящим подписывающая сторона заявляет, что указанная машина соответствует Директиве ЕС 2006/42/ЕС (Директива по машинам) и 2014/30/ЕС (Электромагнитная совместимость, ЭМС), включая их поправки, переведенные в национальное законодательство стран-членов. Подписавшаяся сторона имеет индивидуальное право на составление технических документов и заявляет, что были применены следующие стандарты, включая содержащиеся в них нормативные процедуры:

[S] Original EG-KONFORMITETSFÖRKLARING

Undertecknaren intygar härmed att den specificerade maskinen överensstämmer med EG-direktivet 2006/42/EC (maskindirektivet) och 2014/30/EU (elektromagnetisk kompatibilitet, EMC) inklusive deras tillägg som översatts till nationell lagstiftning i medlemsländerna. Undertecknaren är individuellt behörig att sammanställa de tekniska dokumenten och förklarar att följande standarder, inklusive de normativa procedurerna som finns däri, har tillämpats:

[SK] Originál vyhlásenie o zhode

Signatár týmto vyhlasuje, že špecifikovaný stroj je v súlade so Smernicou ES 2006/42/EC (Smernica o strojoch) a 2014/30/EU (Elektromagnetická kompatibilita, EMC) vrátane ich dodatkov preložených do národnej legislatívy členských krajín. Signatár je individuálne oprávnený zostavovať technické dokumenty a vyhlasuje, že boli aplikované nasledujúce normy vrátane normatívnych postupov v nich obsiahnutých:

[SLO] Original EU IZJAVA O SKLADNOSTI

Podpisnik s tem izjavlja, da je navedeni stroj v skladu z Direktivo ES 2006/42/ES (Direktiva o strojih) in 2014/30/EU (Electro-Magnetic Compatibility, EMC), vključno z njunimi spremembami, kot so prevedene v nacionalno zakonodajo držav članic. Podpisnik je posamično pooblaščen za sestavo tehnične dokumentacije in izjavlja, da so bili uporabljeni naslednji standardi, vključno z normativnimi postopki, ki jih vsebuje:

[TR] Orijinal AB Uygunluk Açıklaması

İmza sahibi, belirtilen makinenin AB Direktifi 2006/42/EC (Makine Direktifi) ve 2014/30/EU (Elektro-Manyetik Uyumluluk, EMC) ve bunların üye ülkelerin ulusal mevzuatına tercüme edilen değişiklikleri ile uyumlu olduğunu beyan eder. İmza sahibi, teknik belgeleri derlemeye bireysel olarak yetkilidir ve burada yer alan normatif prosedürler dahil olmak üzere aşağıdaki standartların uygulandığını beyan eder:

<the applied standards have to be shown here>

(1) Type: **XX XX– Reach truck**

(2) Serial No: **XXXXXXXX**

(3) Year of constr.: **YYYY**

(4) Manufacturer: Noblelift Intelligent Equipment Co., Ltd.
528 Changzhou Road, Taihu Sub-district, Changxing, 313100, PR China

(5) Responsible for compiling the technical documentation: <Company name>,
<Company Address>

(6) Date: <Place>, **YYYY.MM.DD**

(7) Authorized signatory: <Position> **Mr. Sample**

if you can read this text, your declaration is not complete. In this case ask for a copy

(1) Type/ Typ/ Tipo/ Modello/ Tyyppi/ Tipo / ΤΥΠΟΣ/ Típus/ Tip/ Тип/ Tips/ Tipas/ Tüüp:
(2) Serial No./ Serien-Nr./ N°. de série/ Serienummer/ Nº de serie/ Numero di serie/ Serienr./ Sarjanro/ αυξάνωναριθμός/ Seriové číslo/ Szériaszám/ Nr.Seryjny/ Serijska številka/ Výrobné číslo/ Серийныйномер/ Seri No./ Seerianr./ Sērijas Nr./ Serijos numeris:
(3) Year of constr./ Baujahr/ Année de constr./ Bouwjaar/ Año de constr./ Anno di costruzione/ Produktionsår/ Byggeår/ Tillverkningsår/ Valmistusvuosi / Ano de fabrico / έτοςκατασκευής/ Rokvýroby/ Gyártásév/ Rokprodukcji / Letnik / Годизготовления / Üretimyılı / Väljalaskeaasta / Izgatavošanas gads / Gamybosmetai
(4) Manufacturer/ Hersteller/ Fabricante/ Fabricant/ Fabrikant/ Fabricante/ Produttore/ производител/ Výrobce/ Fabrikant/ Tootja/ Valmistaja/ Κατασκευαστής/ Gyártó/ Gamintojas/ Ražotājs/ Produsent/ Producent/ Producător/ Производитель/ Tillverkare/ Výrobca/ Proizvajalec/ Üretici firma
(5) Responsible for compiling the technical documentiton/ Verantwortlich für die Zusammenstellung der technischen Dokumentation/ Responsable de compilar la documentación técnica/ Responsable de la compilation de la documentation technique/ Verantwoordelijk voor het samenstellen van de technische documentatie/ Responsável pela compilação da documentação técnica/ Responsabile della compilazione della documentazione tecnica/ Отговаря за съставянето на техническата документация/ Zodpovídá za sestavení technické dokumentace/ Ansvarlig for udarbejdelse af den tekniske documentation/ Vastutab tehnilise dokumentatsiooni koostamise eest/ Vastaa teknisen dokumentaation laatimisesta/ Υπεύθυνος για τη σύνταξη της τεχνικής τεκμηρίωσης/ Felelős a műszaki dokumentáció összeállításáért/ Atsakingas už techninės dokumentacijos sudarymą/ Atbildīgs par tehniskās dokumentācijas sastādīšanu/ Ansvarlig for sammenstilling av teknisk dokumentasjon/ Odpowiedzialny za kompletowanie dokumentacji technicznej/ Responsabil cu intocmirea documentatiei tehnice/ Ответственный за составление технической документации/ Ansvarig för att sammanställa den tekniska dokumentationen/ Zodpovedá za zostavenie technickej dokumentácie/ Odgovoren za pripravo tehnične dokumentacije/ Teknik dokümantasyonun derlenmesinden sorumlu
(6) Date/ Datum/ Data/ Fecha/ datum/ Dato/ päiväys/ Kuupäev/ Datums/дата/ Dátum/ dátum/ tarih/ ημερομηνία
(1) Authorised signatory/ ImAuftrag/ pour ordre/ Incaricato/ Por orden de/ por procuração/ op last van/ påvegneaf/ påuppdrag/ Etteroppdrag/ psta./ Ülesandel / pavedus / v.i. / Попоручению / megbízásából /длъжностнолице / z pověření / z poverenia / po nalogu / napolecenie / din sarcina / adına / θαη' ελληνή