Print Number：　　Print Date：

NOBLELIFT

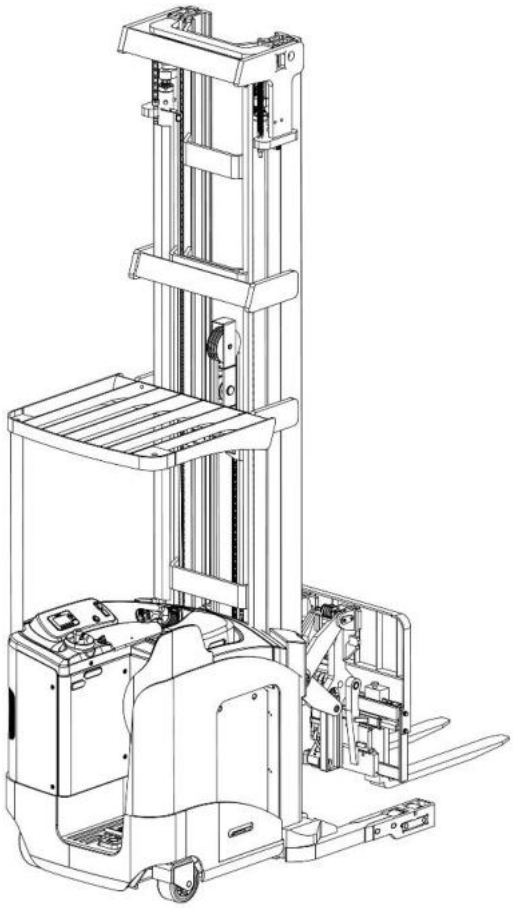

Reach Truck

RT20SP

PARTS MANUAL

215046010101

Version：V01

Truck Identification Number From:

Parts Manual

RT20SP-PM01EN

Please order spare parts from authorized dealers of Noblelift Intelligent Equipment Co., LTD.

In order to avoid wrong delivery, all the orders for spare parts should specify the following items:

- Truck model, identification number and manufacture year.
- Orders for spare parts of mast, hydraulic transmission unit, steering axle, motor, etc. shall indicate the manufacture number of these parts.
- Codes for Noblelift spare parts are shown in the table of parts manual. Please also pay attention to the description of supply status, order quantity, etc. (check the number listed in "Mark" column of the parts manual).

"Mark" Column:

The unmarked indicates the parts are in short supply cycle.

Number 1: supply as package. Indicating these that parts are small parts and seal parts, which are supplied in package unit and in short supply cycle.

Number 2: supply with constraints. Indicating that these spare parts are not in stock and will be prepared for production after receiving the order from customers, which are in long supply cycle.

Number 3: phasing-out supply. Indicating that these parts will be replaced by new parts due to technical improvements and the current stock will not be available when these parts run out. Please check the description of technical improvements notice.

Number 4: supply as assembly. Indicating that these parts are assembly parts defined by manufacture process, which cannot be supplied as a single part.

Number 5: check other tables.

This parts manual is the property of Noblelift and can be shared under the confidential agreement only, Noblelift has the right to claim for compensation of any unauthorized use. Copy without permission is not allowed. Figures in the manual are not limited by the original design. Noblelift Intelligent Equipment Co., LTD reserves the right to improve the products for continuous technology progress.

Table of Contents

Chapter 1: Drive System 1
01 Drive Unit (214546013501) 1
01 Drive Unit (214546013501) Continuation 1 3
02 Lifting Motor Unit (214546032501) 5
Chapter 2: Hydraulic System 7
01 Chassis Hydraulic Unit (214546025501) 7
01 Chassis Hydraulic Unit (214546025501) Continuation 1 9
02 Oil Tank (214546019001) 11
Chapter 3: Truck Structure 13
01 Chassis (214046021501) 13
01 Chassis (214046021501) Continuation 1 15
01 Chassis (214046021501) Continuation 2 17
02 Pedal (214546018001) 19
03 Overhead Guard (214546022001) 21
Chapter 4: Mast Structure 23
01 Outer Mast (214546044501) 23
01 Outer Mast (214546044501) Continuation 1 25
02 Middle Mast (214546044502) 27
02 Middle Mast (214546044502) Continuation 1 29
03 Inner Mast (214546044503) 31
03 Inner Mast (214546044503) Continuation 1 33
04 Mast Hydraulic Unit (214546044504) 35
04 Mast Hydraulic Unit (214546044504) Continuation 1 37
05 Plexiglass Protection (214546019501) 39
Chapter 5: Pantograph Structure (Single Pantograph) 41
01 Pantograph Structure (Front) (214046053001) 41
01 Pantograph Structure (Front) (214046053001) Continuation 1 43
02 Pantograph Arm (214046053002) 45
03 Pantograph Structure (Back) (215046053001) 47
03 Pantograph Structure (Back) (215046053001) Continuation 1 49
04 Pantograph Hydraulic Unit (214046053004) 51
05 Fork Carriage (215046053002) 53
Chapter 6: Steering System and Wheels 55
01 Steering Wheel (214546031501) 55
02 Load wheel (214546017001) 57
Chapter 7: Electrical Parts 59
01 Controller Assembly F4A (214546033001) 59
02 Wire Harness F4A (214546033002) 61
03 Lead-acid Battery Charger-1 (214546036501) 63
04 Lead-acid Battery Charger-2 (214546036502) 65
05 Lithium Battery Charger (214546036503) 67
Chapter 8: Special Parts 69

01 Lead-acid Battery (214546037001) 69
02 Lithium Battery (214546037002) 71
03 Camera (214546036001) 73
Chapter 9: Others 75
01 Control Panel (214546010001) 75
02 Elbow Rest Assembly (214546010002) 77
03 Labels and Decals-1 (215046047001) 79
04 Labels and Decals-2 (215046047002) 81
Appendix 83
01 Electrical Diagram F4A (214546003001) 83
02 Hydraulic Diagram (214546044501) 84
03 Consumable Parts List 85

Chapter 1： Drive System

01 Drive Unit (214546013501)

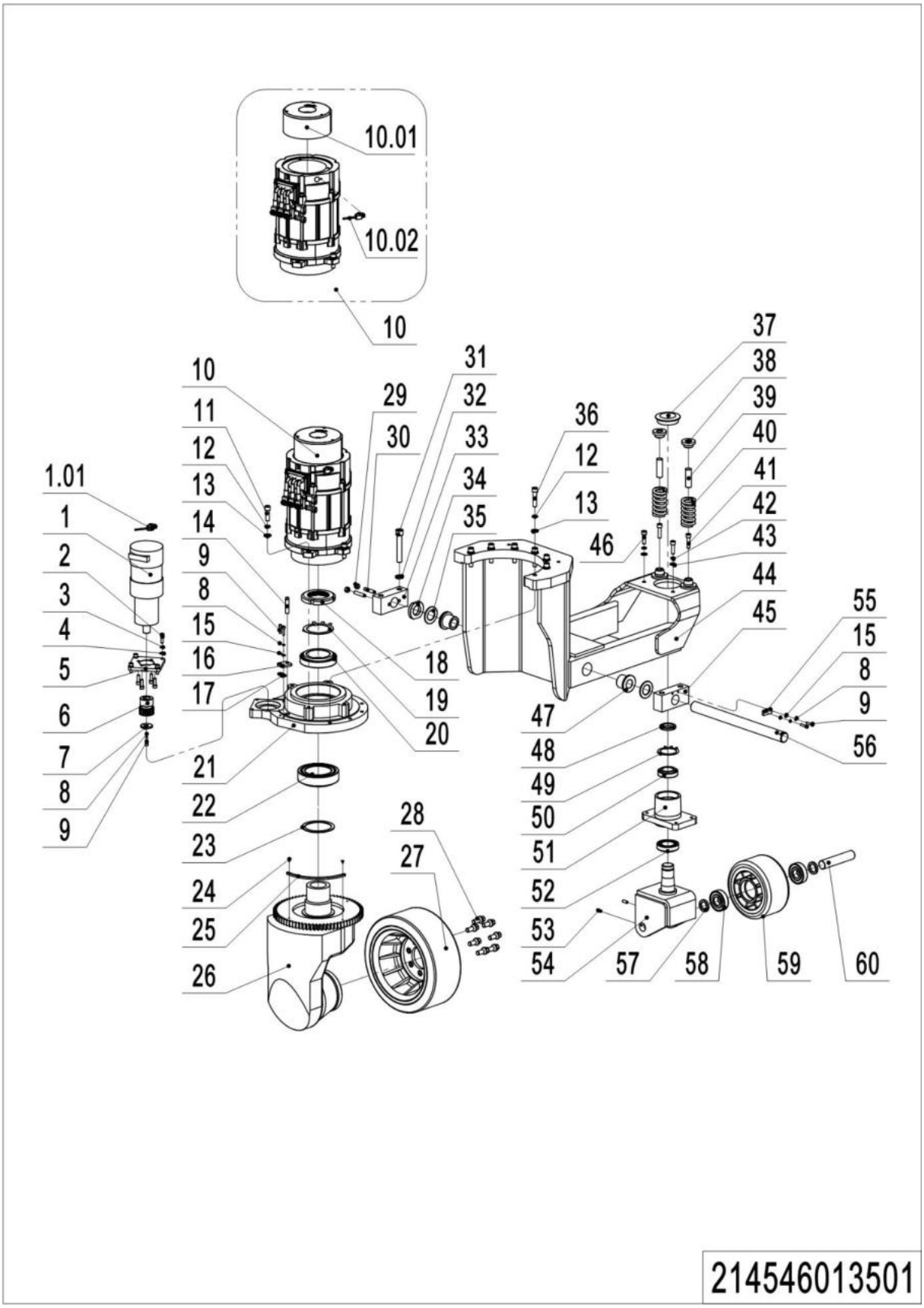

1=package supply; 2=restrict supply; 3=phasing-out supply; 4=supply as assembly; 5=check other tables.

01 Drive Unit (214546013501)

No.	Item Code	Mark	Item Description	Qty.	Substitute	Note
1	940900800001		Steering Unit	1		
1.01	921800200012		Encoder	1		
2	910200200058		Screw	8		
3	910400500006		Spring Washer	4		
4	910400100006		Flat Washer	4		
5	214513520028		Flange	1		
6	216113520025		Gear	1		
7	505616520007		Retaining Ring	1		
8	910400500005		Spring Washer	3		
9	910200200038		Screw	3		
10	920900100150		Motor	1		
10.01	940700100021		Brake	1		
10.02	921800200042		Encoder	1		
11	910100300112		Bolt	4		
12	910400500008		Spring Washer	11		
13	910400100008		Flat Washer	11		
14	214533510007		Proximity Switch	1		
15	910400100005		Flat Washer	4		
16	216113520012		Fixing Plate	1		
17	216113520013		Subplate	1		
18	216514020000		Nut	1		
19	910400900016		Lock Washer	1		
20	910700600024		Bearing	1		
21	214513520000		Fixing Base	1		
22	910700600039		Bearing	1		
23	216514020002		Spacer Bush	1		
24	910200400003		Screw	2		
25	214513520005		Induction Block	1		
26	941000100002		Gearbox	1		
27	940300400047		WheelΦ343x140	1		
27	940300400048		WheelΦ343x140	1		Cold storage
28	216513020000		Bolt	7		

1=package supply; 2=restrict supply; 3=phasing-out supply; 4=supply as assembly; 5=check other tables.

01 Drive Unit (214546013501) Continuation 1

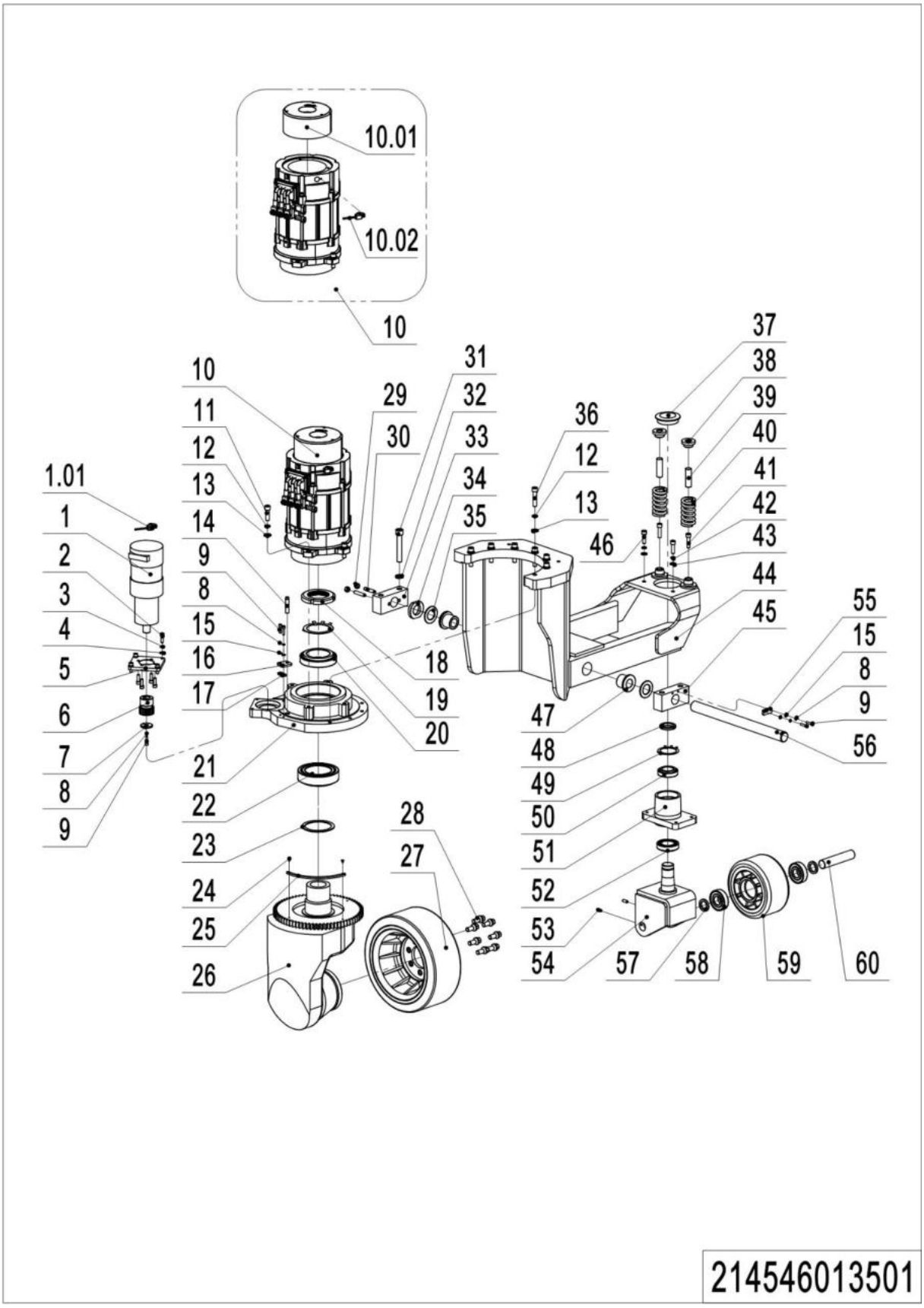

01 Drive Unit (214546013501) Continuation 1

No.	Item Code	Mark	Item Description	Qty.	Substitute	Note
29	910300100007		Nut	2		
30	910201000022		Screw	2		
31	910200200216		Screw	4		
32	910400500010		Spring Washer	4		
33	214513520008		Fixing Base	1		
34	214513520003		Washer	1		
35	214513520004		Washer	2		
36	910200200218		Screw	8		
37	214513520020		Dust Cap	1		
38	214513520006		Pressure Block	2		
39	214513520029		Crash Block	2		
40	214513520007		Spring	2		
41	910200200079		Screw	2		
42	910400500007		Spring Washer	2		
43	910400100007		Flat Washer	2		
44	214513510000		Drive Axle	1		
45	214513520001		Fixing Base	1		
46	910200200077		Screw	2		
47	940500400002		Bearing	2		
48	910300800012		Nut	1		
49	910400900008		Lock Washer	1		
50	910700600016		Bearing	1		
51	214513520009		Bearing Sleeve	1		
52	910700600017		Bearing	1		
53	910200800021		Screw	2		
54	214513510001		Wheel Carrier	1		
55	214513520011		Lock Pad	1		
56	214513520002		Axle	1		
57	214513520019		Washer	2		
58	910700200032		Bearing	2		
59	940300300056		Wheel Φ207x101	1		
60	214513520010		Axle	1		

1=package supply; 2=restrict supply; 3=phasing-out supply; 4=supply as assembly; 5=check other tables.

02 Lifting Motor Unit (214546032501)

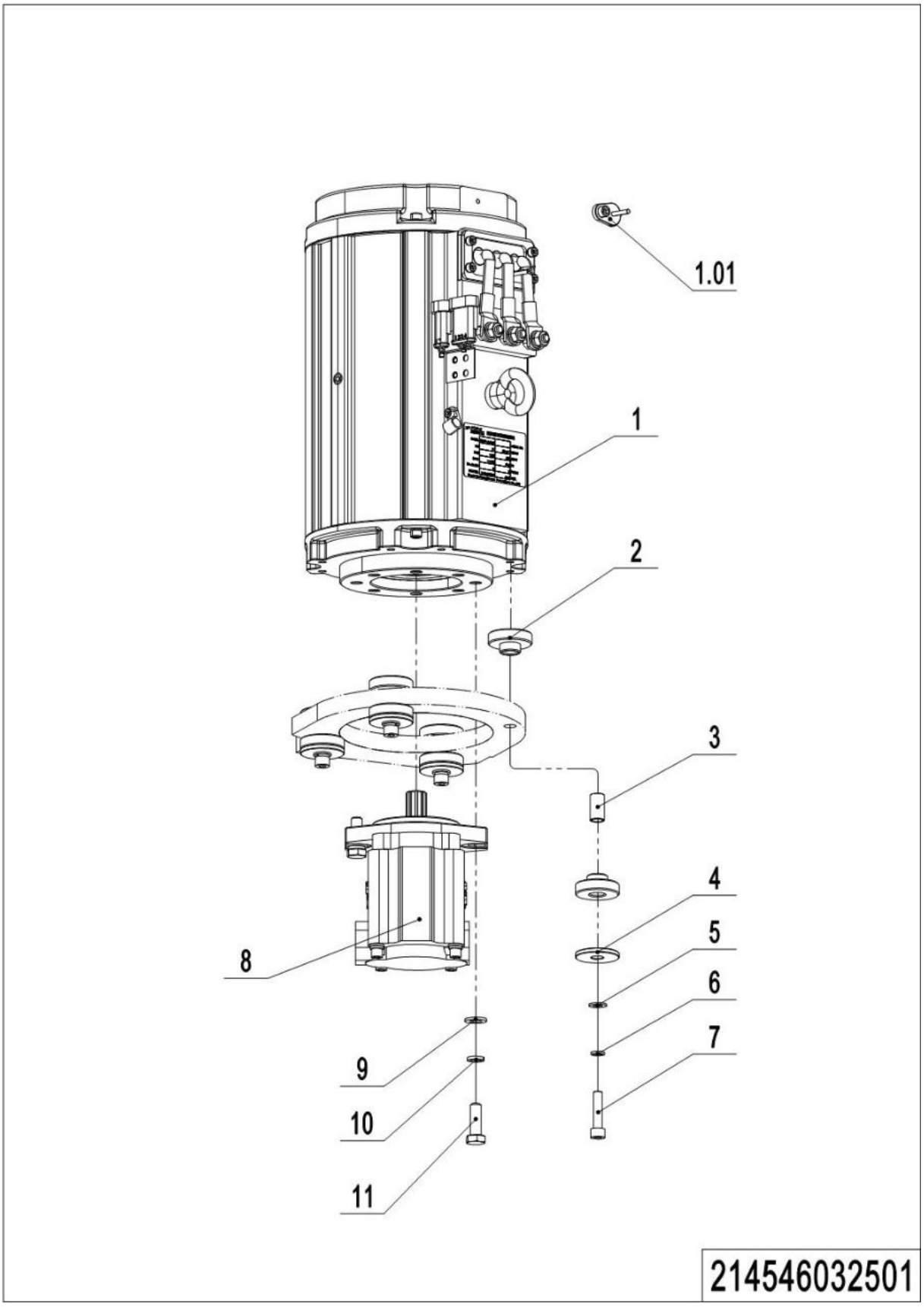

1=package supply; 2=restrict supply; 3=phasing-out supply; 4=supply as assembly; 5=check other tables.

02 Lifting Motor Unit (214546032501)

No.	Item Code	Mark	Item Description	Qty.	Substitute	Note
1	920900100149		Motor	1		
1.01	921800200043		Encoder	1		
2	255032520003		Rubber Mat	8		
3	255032520001		Bushing	4		
4	255032520002		Washer	4		
5	910400100006		Flat Washer	4		
6	910400500006		Spring Washer	4		
7	910200200215		Screw	4		
8	950800200008		Gear Pump	1		
9	910400100007		Spring Washer	2		
10	910400500007		Screw	2		
11	910100400004		Gear Pump	2		

Chapter 2: Hydraulic System

01 Chassis Hydraulic Unit (214546025501)

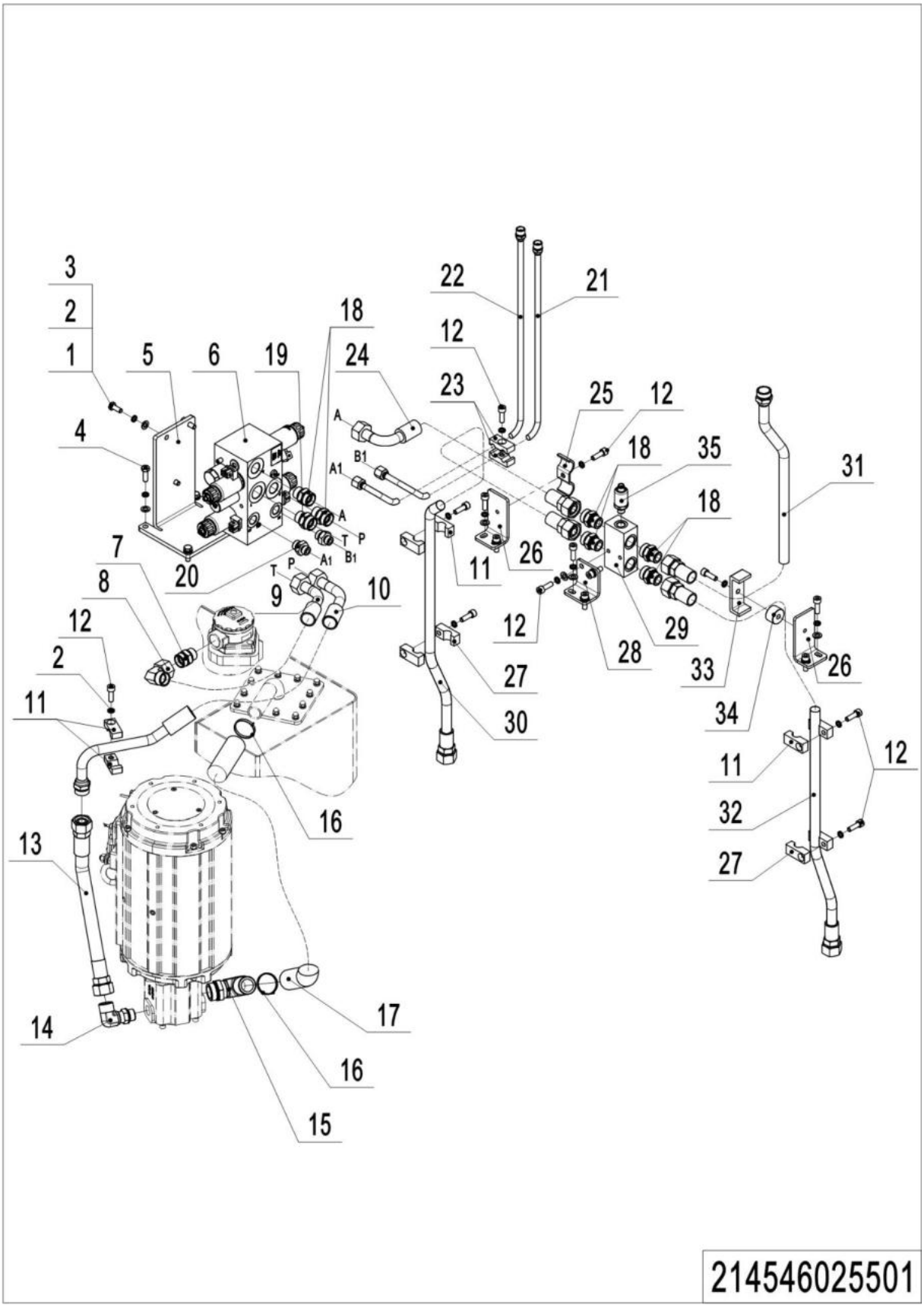

1=package supply; 2=restrict supply; 3=phasing-out supply; 4=supply as assembly; 5=check other tables.

01 Chassis Hydraulic Unit (214546025501)

No.	Item Code	Mark	Item Description	Qty.	Substitute	Note
1	910100300022		Bolt	3		
2	910400500006		Spring Washer	23		
3	910400100006		Flat Washer	15		
4	910100300023		Bolt	4		
5	214525510000		Mounting Plate	1		
6	950600100040		Hydraulic Valve	1		
7	950400300016		Joint	1		
8	950400200006		Joint	1		
9	214525520005		Hose	1		
10	214525520006		Hose	1		
11	213044520110		Pipe Clip	6		
12	910200200058		Screw	15		
13	214525520057		Hose	1		
14	950401100005		Joint	1		
15	214525520056		Adapter	1		
16	911000600006		Hose Clamp	2		
17	214525520055		Oil Tube	1		
18	950400400011		Joint	6		
19	950400400024		Adapter	1		
20	950400400002		Joint	2		
21	214525520043		Steel Tube	1		Chassis B and C
21	214525520045		Steel Tube	1		Chassis D
21	214525520047		Steel Tube	1		Chassis E
22	214525520042		Steel Tube	1		Chassis B and C
22	214525520044		Steel Tube	1		Chassis D
22	214525520046		Steel Tube	1		Chassis E
23	201044520027		Pipe Clip	2		
24	214525520004		Hose	1		
25	214525520003		Pipe Clip	1		

01 Chassis Hydraulic Unit (214546025501) Continuation 1

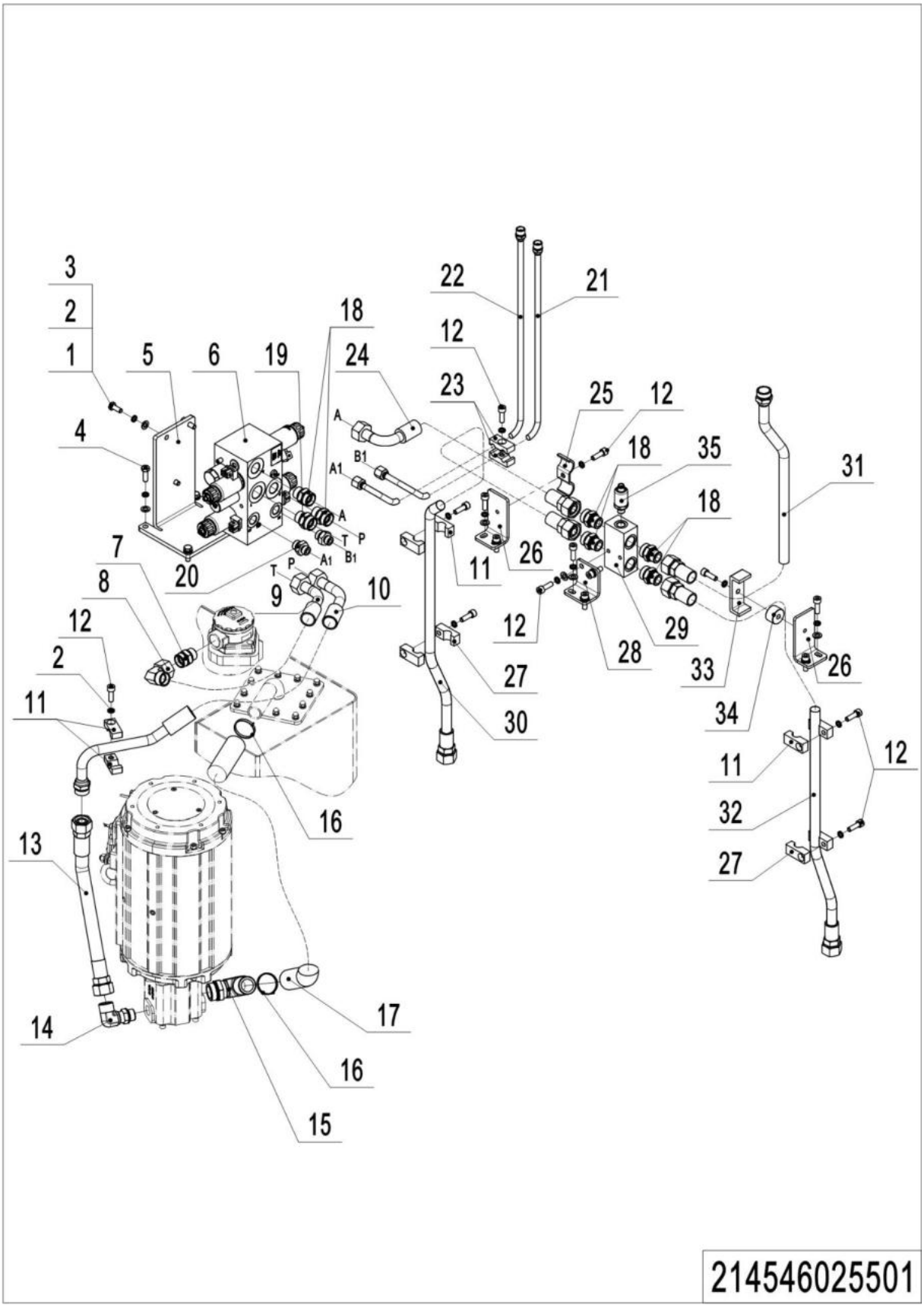

1=package supply; 2=restrict supply; 3=phasing-out supply; 4=supply as assembly; 5=check other tables.

01 Chassis Hydraulic Unit (214546025501) Continuation 1

No.	Item Code	Mark	Item Description	Qty.	Substitute	Note
26	214525520002		Fixing Plate	1		
27	213044520111		Pipe Clip	4		
28	214525520001		Fixing Plate	1		
29	214525520052		Valve Block	1		
30	214525520036		Hose	1		Chassis B and C
30	214525520038		Hose	1		Chassis D
30	214525520040		Hose	1		Chassis E
31	214525520014		Steel Tube	1		Chassis B and C
31	214525520015		Steel Tube	1		Chassis D
31	214525520016		Steel Tube	1		Chassis E
32	214525520037		Hose	1		Chassis B and C
32	214525520039		Hose	1		Chassis D
32	214525520041		Hose	1		Chassis E
33	214525520048		Fixing Plate	1		
34	214525520049		Support	1		
35	921800100064		Sensor	1		

02 Oil Tank (214546019001)

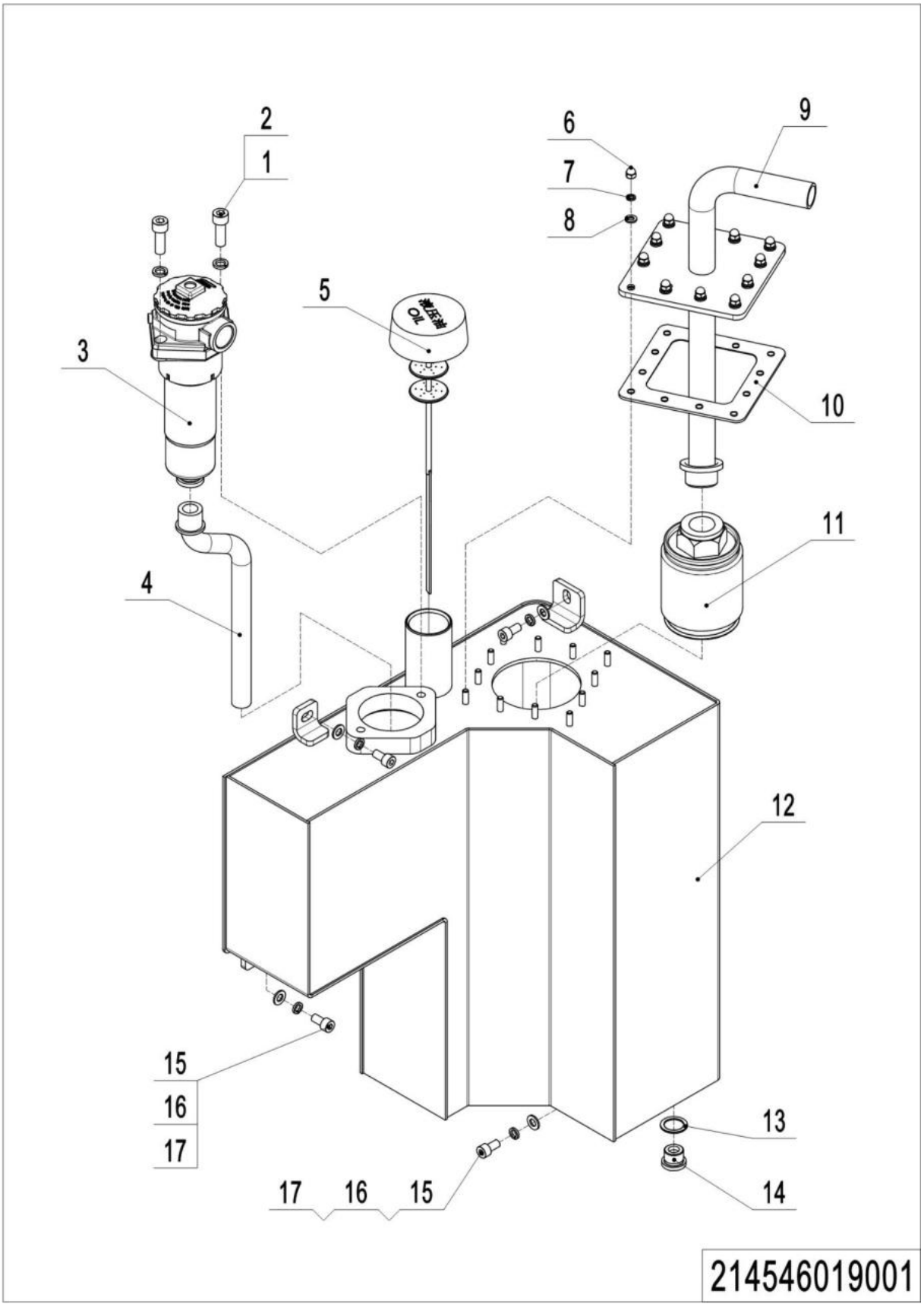

1=package supply; 2=restrict supply; 3=phasing-out supply; 4=supply as assembly; 5=check other tables.

02 Oil Tank (214546019001)

No.	Item Code	Mark	Item Description	Qty.	Substitute	Note
1	910200200077		Screw	2		
2	910400500007		Spring Washer	2		
3	951000300005		Filter	1		
4	214519010002		Pipe	1		
5	212119020019		Cap-Tank	1		
6	910301000004		Nut	12		
7	910400500005		Spring Washer	12		
8	910400100005		Flat Washer	12		
9	214519010001		Close Plate	1		
10	212119020000		Sealing Gasket	1		
11	951000400001		Filter	1		
12	214519010000		Tank	1		
13	910800900001		Bonded Washer	1		
14	255019020015		Filler Plug	1		
15	910200200057		Screw	4		
16	910400500006		Spring Washer	4		
17	910400100006		Flat Washer	4		

Chapter 3: Truck Structure

01 Chassis (214046021501)

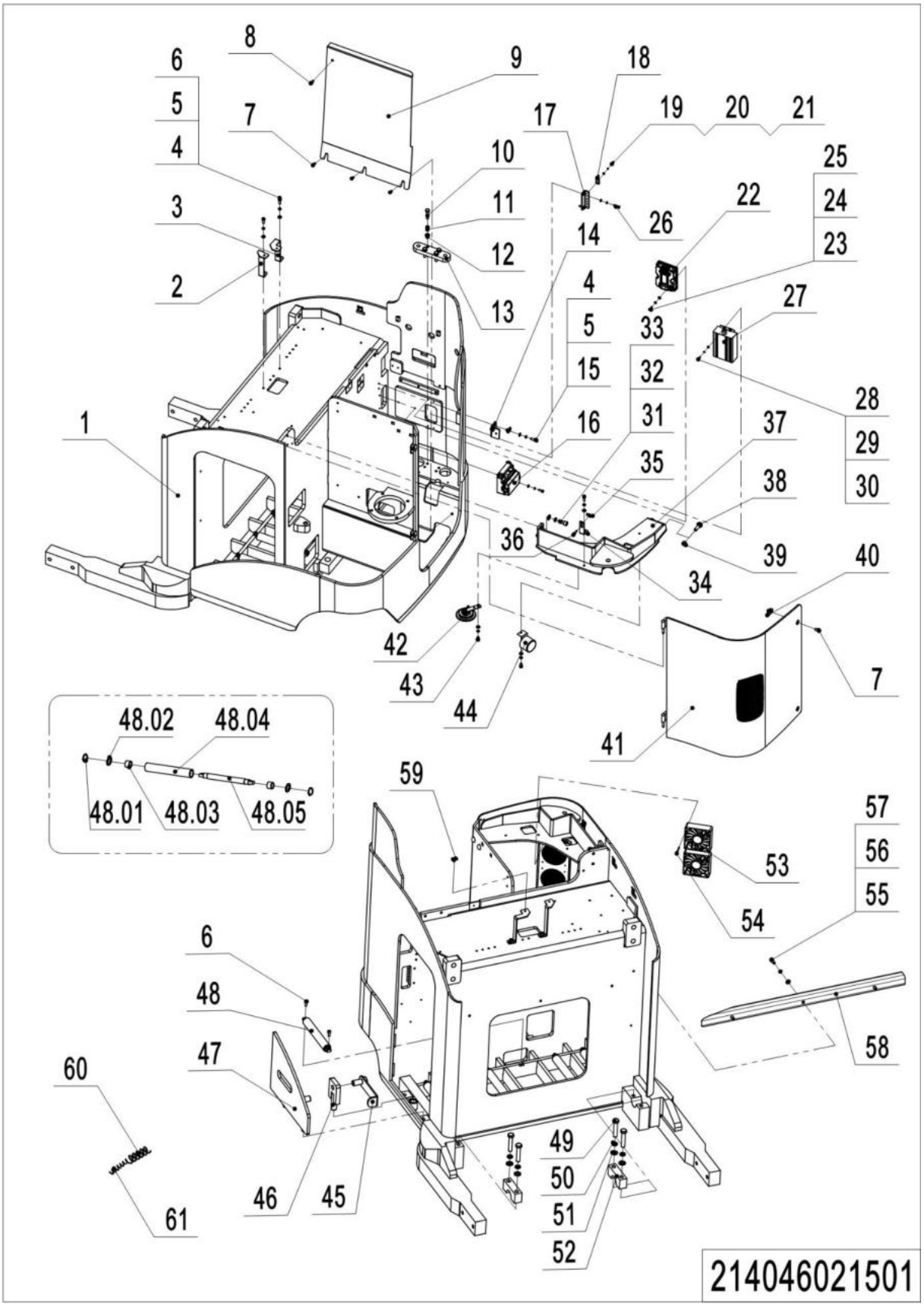

1=package supply; 2=restrict supply; 3=phasing-out supply; 4=supply as assembly; 5=check other tables.

01 Chassis (214046021501)

No.	Item Code	Mark	Item Description	Qty.	Substitute	Note
1	214521510000		Chassis	1		Chassis B and C
1	214521510001		Chassis	1		Chassis D
1	214521510002		Chassis	1		Chassis E
2	214521520093		Fixing Plate	1		
3	214521520092		Fixing Plate	1		
4	910400100006		Flat Washer	6		
5	910400500006		Spring Washer	6		
6	910200200057		Screw	2		
7	941100100004		Screw	5		
8	941100100012		Screw	2		
9	214521520065		Side Plate	1		
10	910200200079		Screw	4		
11	910400500007		Spring Washer	4		
12	910400100007		Flat Washer	4		
13	214521520063		Pressure Plate	1		
14	214521520064		Fixing Base	1		
15	910200200058		Screw	2		
16	921400100201		Control Box	1		
17	214521520086		Fixing Plate	1		
18	921300300003		Holder	3		
19	910200200013		Screw	6		
20	910400100003		Flat Washer	6		
21	910400500003		Spring Washer	6		
22	921400100113		Controller	1		
23	910200200035		Screw	2		
24	910400500005		Spring Washer	4		
25	910400100005		Flat Washer	4		
26	910200200038		Screw	2		
27	921900100019		Converter	1		
28	910200200022		Screw	4		

1=package supply; 2=restrict supply; 3=phasing-out supply; 4=supply as assembly; 5=check other tables.

01 Chassis (214046021501) Continuation 1

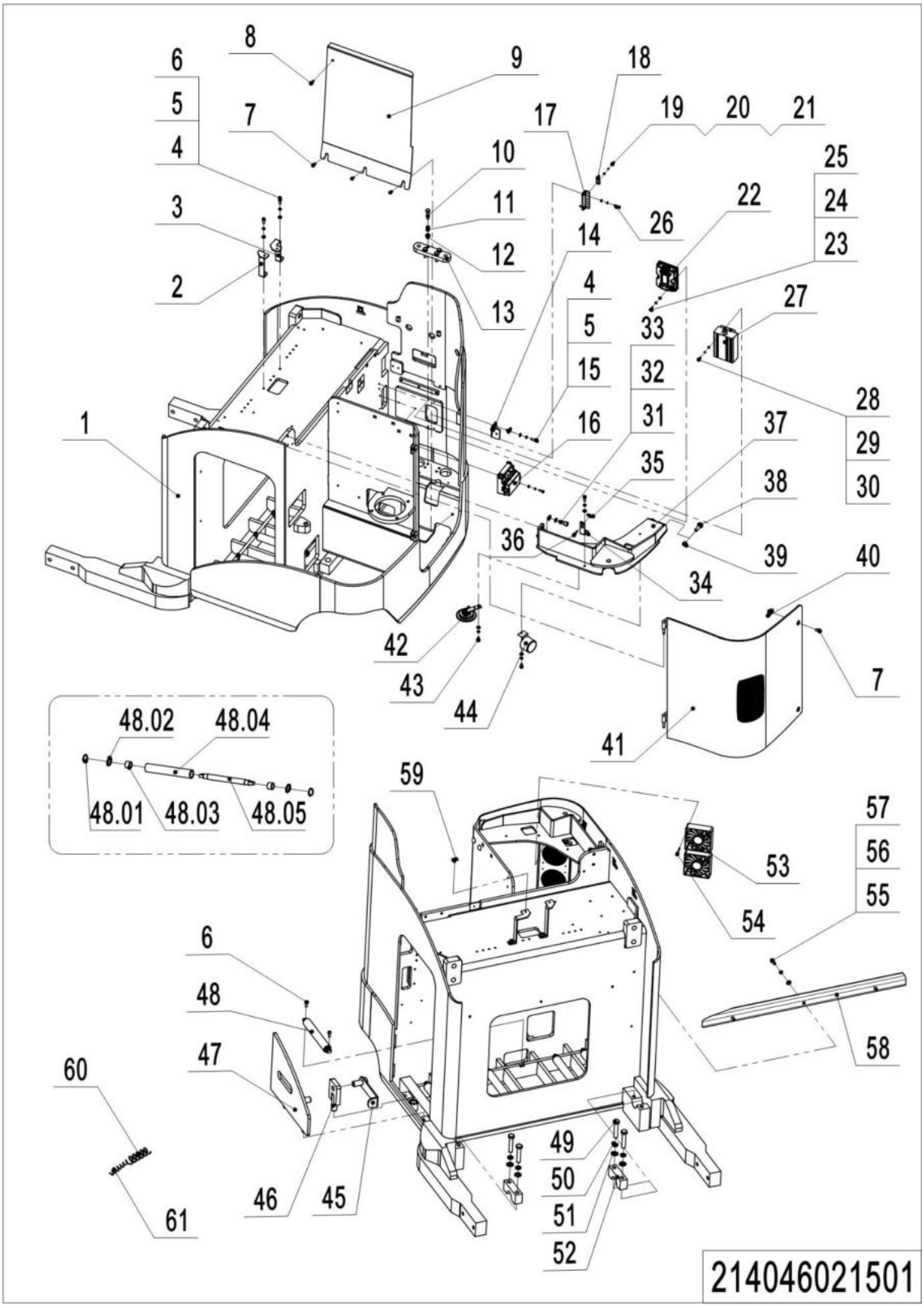

01 Chassis (214046021501) Continuation 1

No.	Item Code	Mark	Item Description	Qty.	Substitute	Note
29	910400500004		Spring Washer	4		
30	910400100004		Flat Washer	4		
31	910200200098		Screw	2		
32	910400500008		Spring Washer	2		
33	910400100008		Flat Washer	2		
34	214521520091		Fixing Plate	1		
35	940400400001		Cage Nut	1		
36	941100100010		Screw	1		
37	214521510003		Platform	1		
38	910100900004		Bolt	2		
39	910300500006		Nut	2		
40	940400400003		Cage Nut	2		
41	214521510004		Side Door	1		
42	920500100001		Horn	1		
43	910200200053		Screw	2		
44	920500100005		Horn	1		
45	214521510005		Handle	1		
46	221021510006		Stop Dog	1		
47	214521510006		Baffle	1		Chassis B and C
47	214521510007		Baffle	1		Chassis D
47	214521510008		Baffle	1		Chassis E
48	214512510000		Roller Kits	6		
48.01	910401300011		Circlip	2		
48.02	232021520104		Washer	2		
48.03	910700800001		Bearing	2		
48.04	214512520001		Roller	1		
48.05	214512520000		Axle	1		

01 Chassis (214046021501) Continuation 2

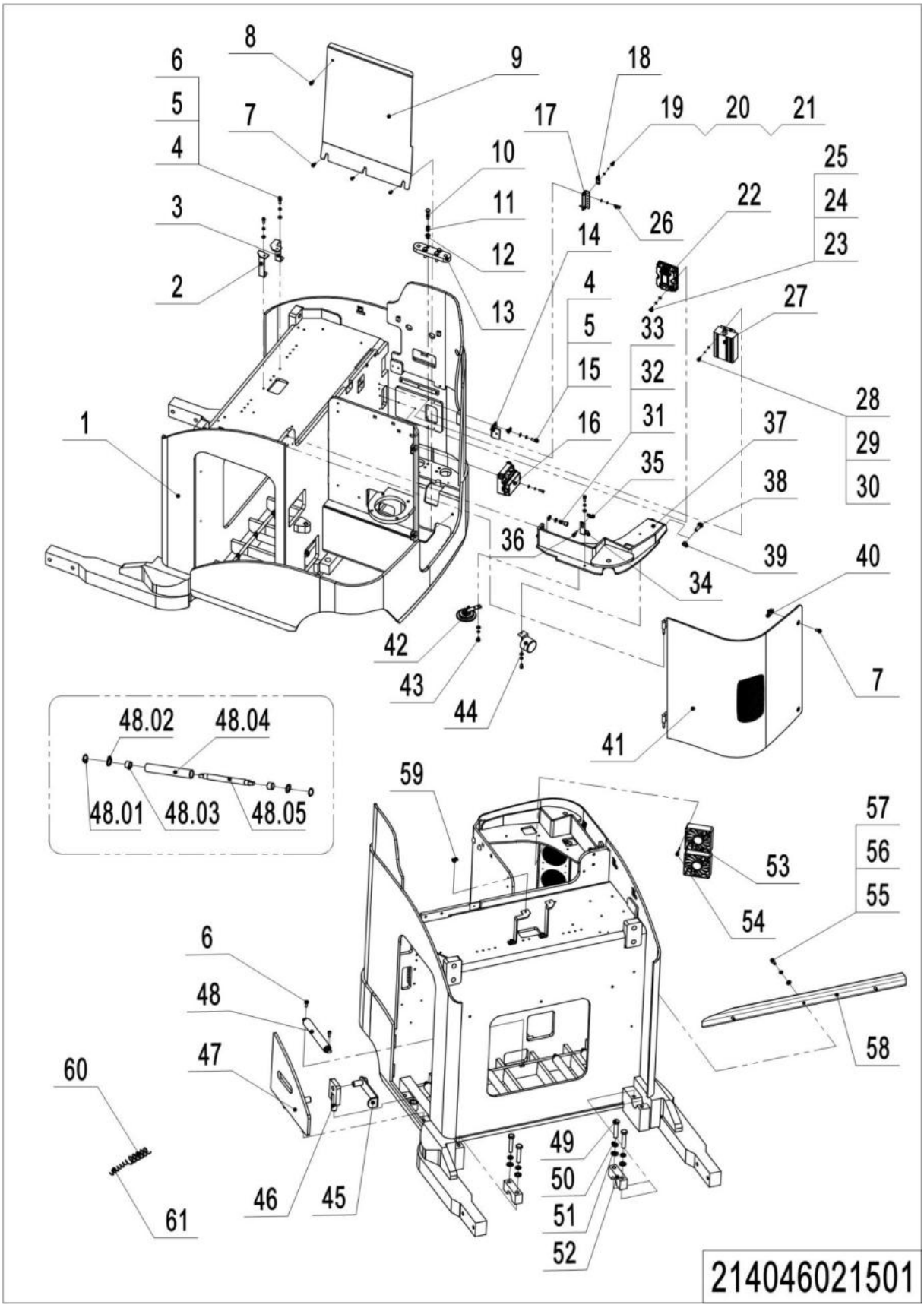

01 Chassis (214046021501) Continuation 2

No.	Item Code	Mark	Item Description	Qty.	Substitute	Note
49	910100400039		Bolt	4		
50	910400500010		Spring Washer	4		
51	910400100010		Flat Washer	4		
52	212144520217		Fixing Plate	2		
53	214533510005		Fan	2		
54	910200500031		Screw	8		
55	910200200076		Screw	3		Chassis B
56	910400500007		Spring Washer	3		Chassis B
57	910400100007		Flat Washer	3		Chassis B
58	214521520098		Stop Tube	1		Chassis B
59	940400400002		Cage Nut	4		
60	921300200023		Fixator	1		
61	213012520006		Spring	1		

02 Pedal (214546018001)

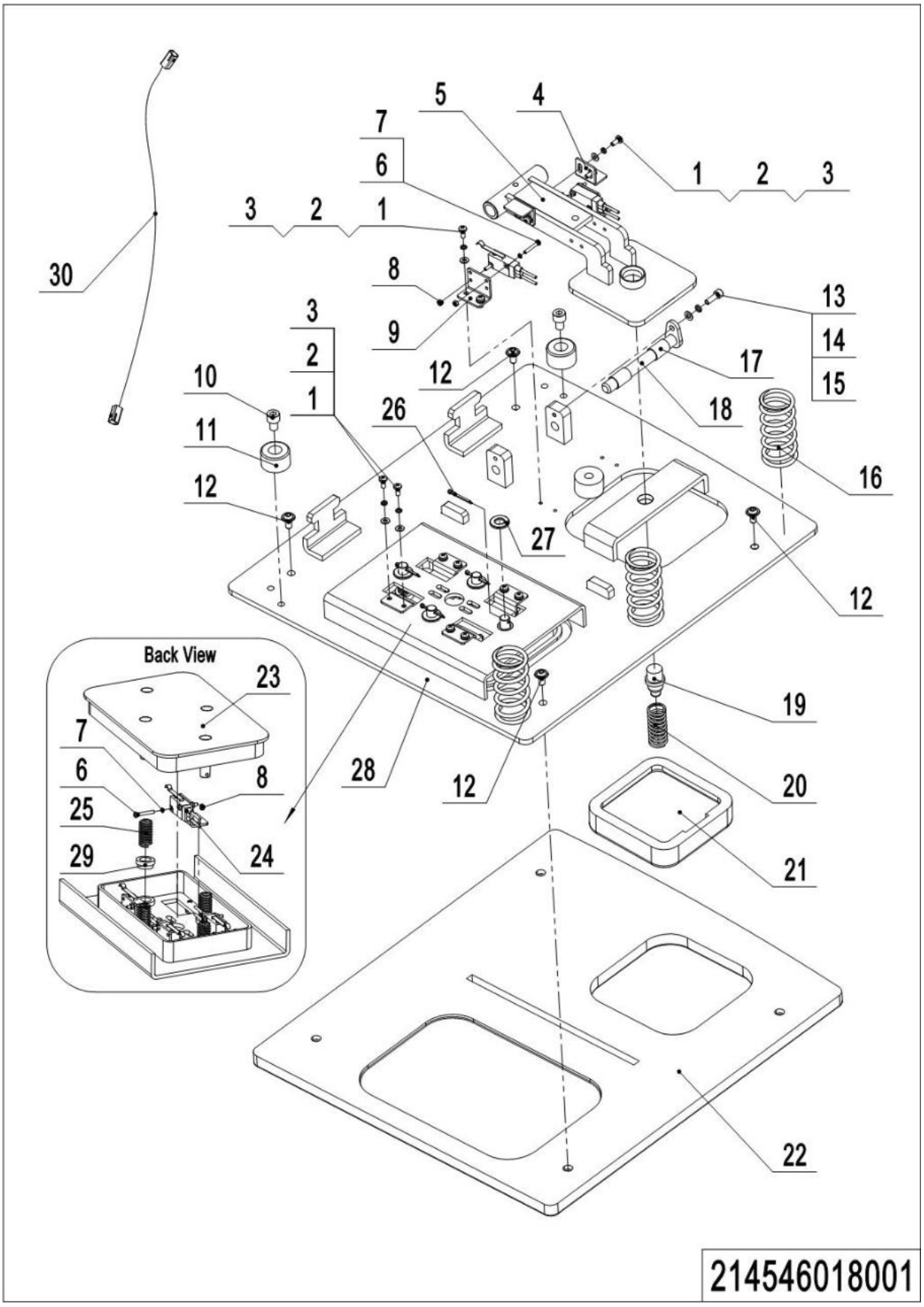

1=package supply; 2=restrict supply; 3=phasing-out supply; 4=supply as assembly; 5=check other tables.

02 Pedal (214546018001)

No.	Item Code	Mark	Item Description	Qty.	Substitute	Note
1	910200500021		Screw	16		
2	910400500003		Spring Washer	18		
3	910400100003		Flat Washer	18		
4	214518020021		Mounting Plate	2		
5	214518010001		Brake Pedal	1		
6	910200500015		Screw	12		
7	910400500002		Spring Washer	12		
8	910300100002		Nut	12		
9	214518020020		Mounting Plate	6		
10	910200200053		Screw	2		
11	532621520062		Crash Pad	2		
12	941100100009		Screw	4		
13	910200200023		Screw	1		
14	910400500004		Spring Washer	1		
15	910400100004		Flat Washer	1		
16	214518020035		Spring	3		
17	940500100074		Bushing	2		
18	214518010003		Pin	1		
19	214518020022		Crash Pad	1		
20	214518020026		Spring	1		
21	214518020030		Sheath	1		
22	214518020031		Rubber Mat	1		
23	214518010002		Pedal Pad	1		
24	920200300028		Microswitch	6		
25	214518020027		Spring	4		
26	910600600019		Cotter Pin	4		
27	910400100007		Flat Washer	4		
28	214518010000		Plate	1		
29	214518020023		Sleeve	4		
30	214533010011		Wire Harness	1		

1=package supply; 2=restrict supply; 3=phasing-out supply; 4=supply as assembly; 5=check other tables.

03 Overhead Guard (214546022001)

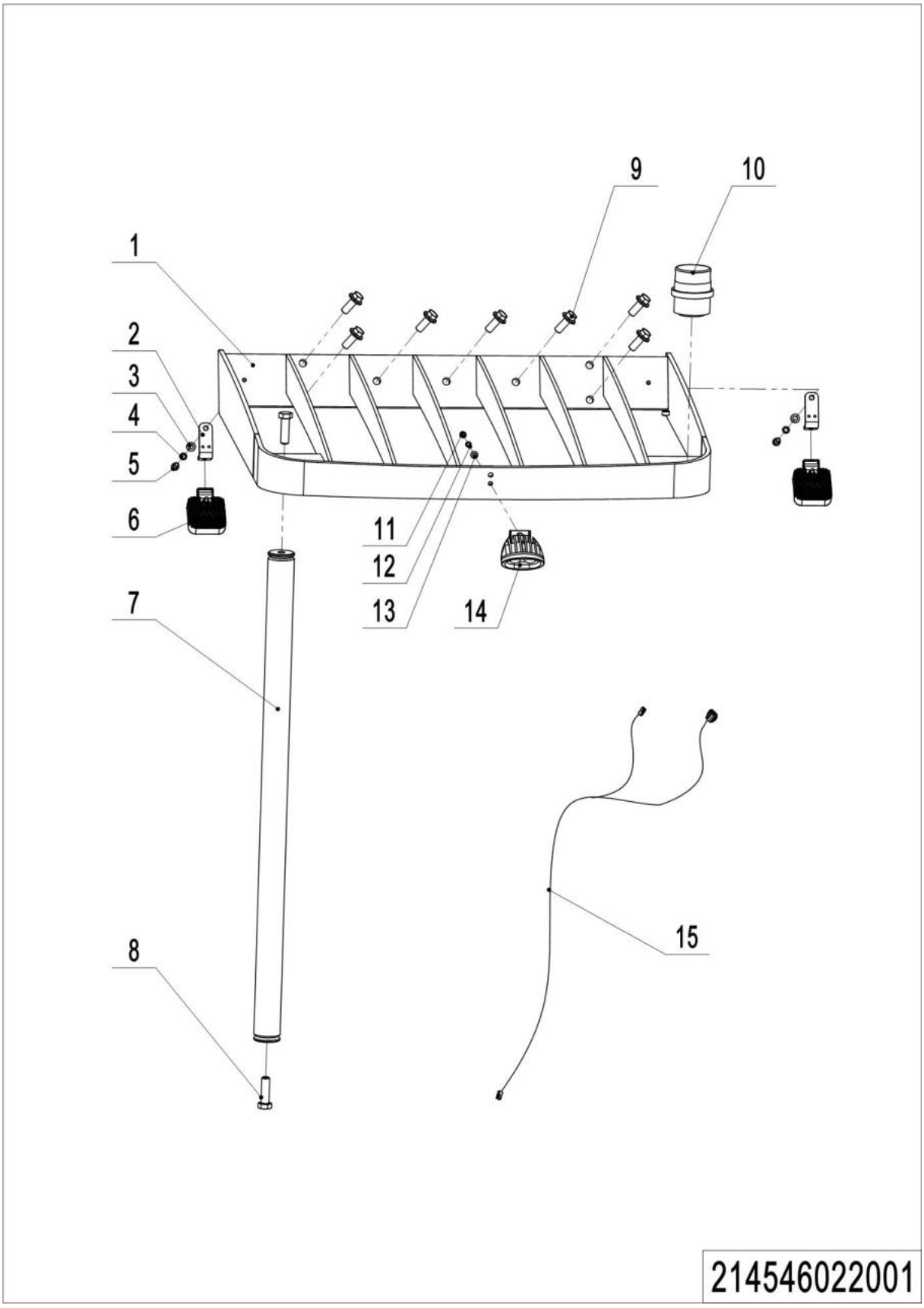

1=package supply; 2=restrict supply; 3=phasing-out supply; 4=supply as assembly; 5=check other tables.

03 Overhead Guard (214546022001)

No.	Item Code	Mark	Item Description	Qty.	Substitute	Note
1	214522010001		Overhead Guard	1		Chassis C(≥6500)
1	214522010002		Overhead Guard	1		Chassis D(≥6500)
1	214522010003		Overhead Guard	1		Chassis E(≥6500)
1	214522010004		Overhead Guard	1		Chassis C(＜6500)
1	214522010005		Overhead Guard	1		Chassis D(＜6500)
1	214522010006		Overhead Guard	1		Chassis E(＜6500)
2	212122020023		Mounting Plate	2		
3	910400100007		Flat Washer	2		
4	910400500007		Spring Washer	2		
5	910200200075		Screw	2		
6	922000100058		Lamp	2		
7	214522010007		Upright	1		4500
7	214522010008		Upright	1		4920
7	214522010000		Upright	1		≥6500
8	910100300080		Bolt	2		
9	910100800006		Bolt	7		
10	922000100059		Lamp	1		
11	910300100006		Nut	1		
12	910400500006		Spring Washer	1		
13	910400100006		Flat Washer	1		
14	922000100067		Lamp	1		
15	921500100256		Wire	1		

Chapter 4: Mast Structure

01 Outer Mast (214546044501)

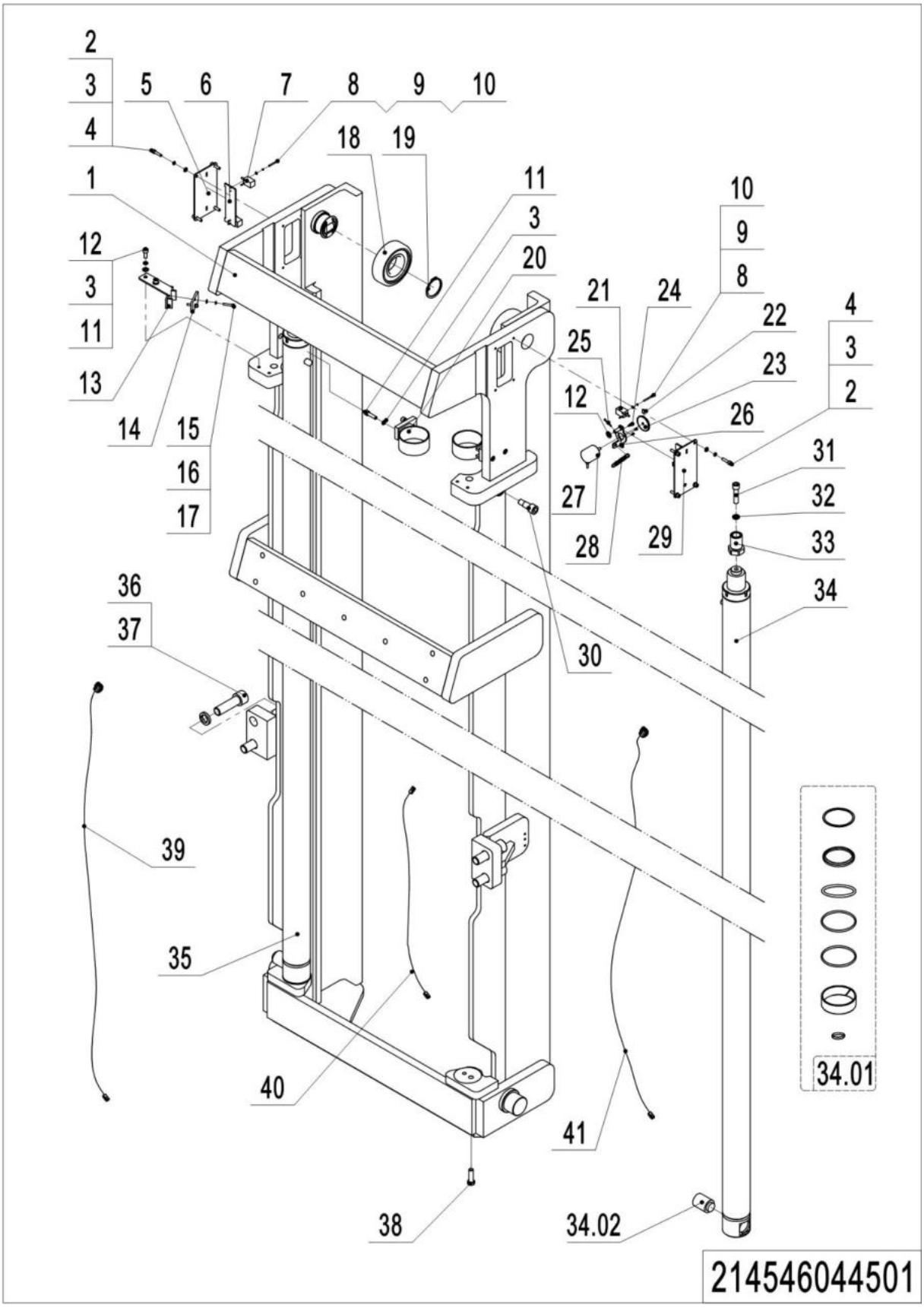

1=package supply; 2=restrict supply; 3=phasing-out supply; 4=supply as assembly; 5=check other tables.

01 Outer Mast (214546044501)

No.	Item Code	Mark	Item Description	Qty.	Substitute	Note
1	214544510005		Outer Mast	1		4500
1	214544510006		Outer Mast	1		4920
1	214544510007		Outer Mast	1		6500
1	214544510008		Outer Mast(	1		7500
1	214544510009		Outer Mast	1		8500
1	214544510010		Outer Mast	1		9500
1	214544510011		Outer Mast	1		10500
2	910200200038		Screw	8		
3	910400500005		Spring Washer	14		
4	910400100005		Flat Washer	8		
5	214544510056		Base	1		
6	214544520086		Fixing Plate	3		
7	920200400056		Proximity Switch	2		
8	910200500017		Screw	6		
9	910400500002		Spring Washer	6		
10	910400100002		Flat Washer	6		
11	910200200060		Screw	6		
12	910400100006		Flat Washer	3		
13	214544510057		Fixing Plate	1		
14	214544520029		Splint	1		
15	910200200025		Screw	2		
16	910400500017		Spring Washer	2		
17	910400100004		Flat Washer	2		
18	940200300060		Compound Roller	2		
19	910401300026		Circlip	2		
20	214544510055		Fixing Base	2		
21	920200400057		Proximity Switch	1		
22	910200800003		Screw	1		
23	214544520047		Chain ring	1		
24	910200500009		Screw	3		

01 Outer Mast (214546044501) Continuation 1

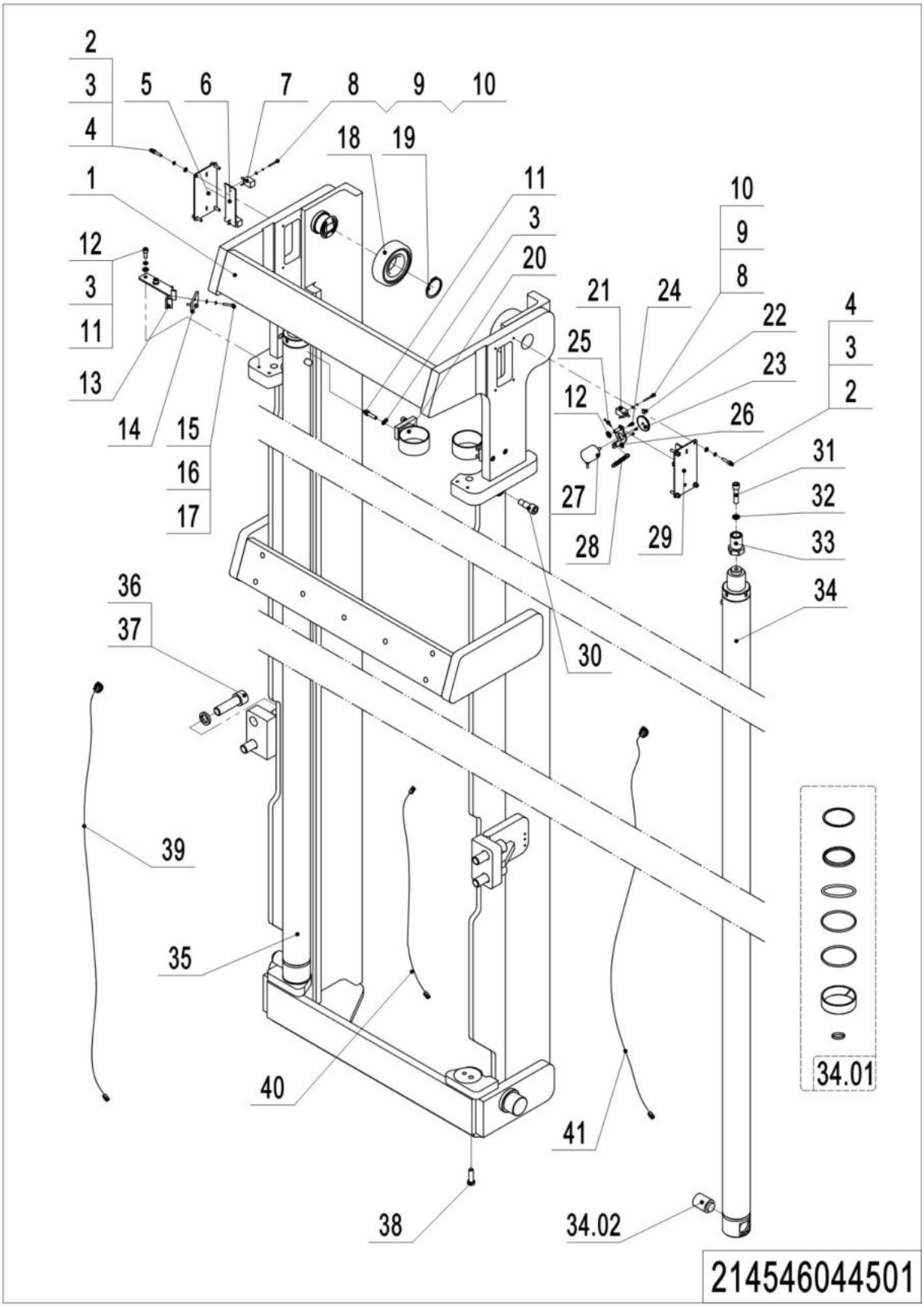

01 Outer Mast (214546044501) Continuation 1

No.	Item Code	Mark	Item Description	Qty.	Substitute	Note
25	910600600015		Cotter Pin	1		
26	214544510050		Mounting Plate	1		
27	921800200041		Encoder	1		
28	214544520155		Spring	1		
29	214544510051		Base	1		
30	214544520009		Screw	2		
31	910200200102		Screw	2		
32	910400500008		Spring Washer	2		
33	212144520060		Barrel	2		
34	214544510060		Cylinder(Right)	1		4500
34	214544510061		Cylinder(Right)	1		4920
34	214544510062		Cylinder(Right)	1		6500
34	214544510063		Cylinder(Right)	1		7500
34	214544510064		Cylinder(Right)	1		8500
34	214544510065		Cylinder(Right)	1		9500
34	214544510066		Cylinder(Right)	1		10500
34.01	212198510002		Seal Kit	2		
34.02	212198520022		Anti-explosion Valve	2		
35	214544510031		Cylinder(Left)	1		4500
35	214544510032		Cylinder(Left)	1		4920
35	214544510033		Cylinder(Left)	1		6500
35	214544510034		Cylinder(Left)	1		7500
35	214544510035		Cylinder(Left)	11		8500
35	214544510036		Cylinder(Left)	1		9500
35	214544510037		Cylinder(Left)	1		10500
36	910200200213		Screw	4		
37	910400500013		Spring Washer	4		
38	910100200005		Bolt	2		
39	921500100252		Wire	1		
40	214533010014		Wire Harness	1		
41	921500100253		Wire	1		

02 Middle Mast (214546044502)

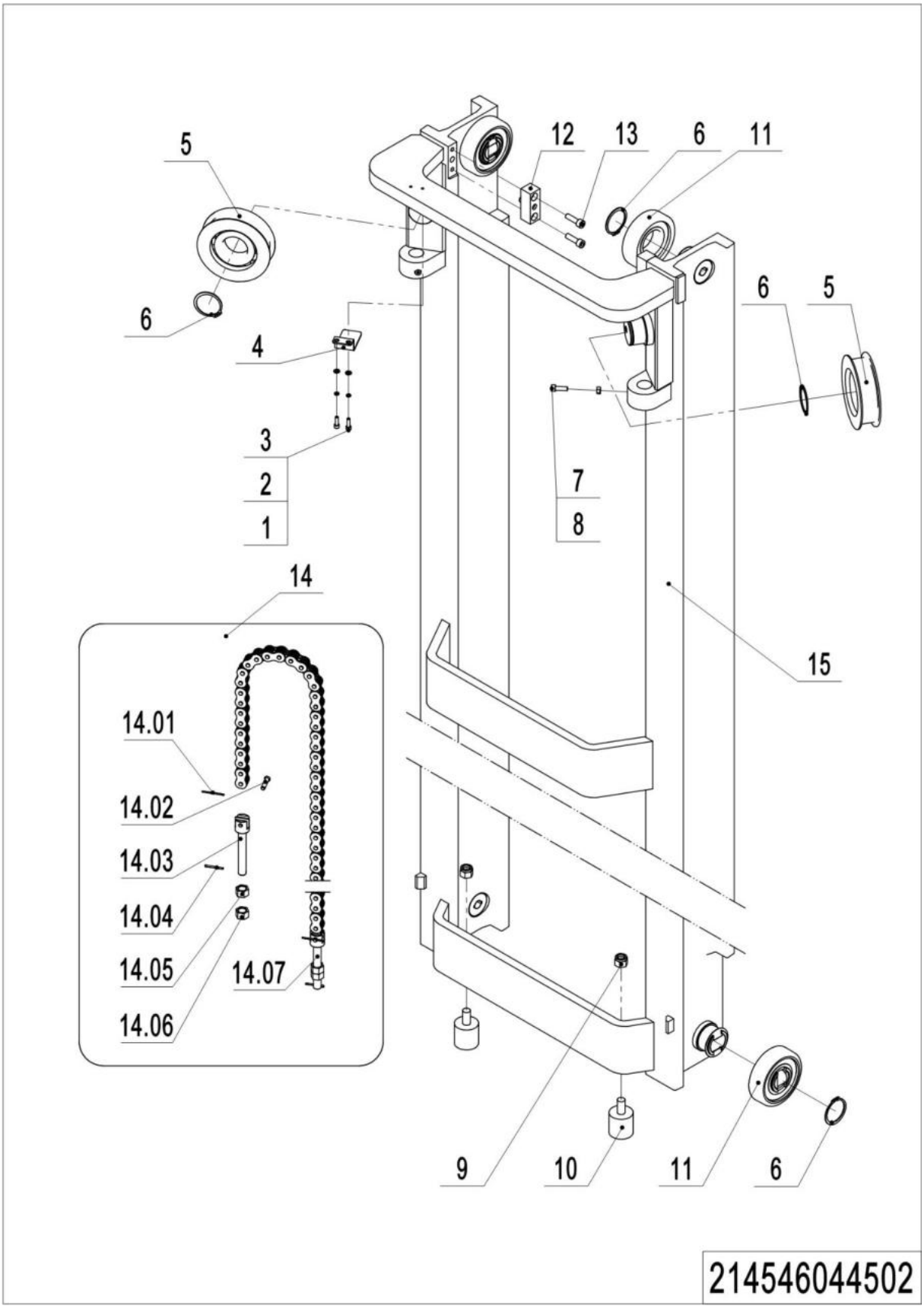

1=package supply; 2=restrict supply; 3=phasing-out supply; 4=supply as assembly; 5=check other tables.

02 Middle Mast (214546044502)

No.	Item Code	Mark	Item Description	Qty.	Substitute	Note
1	910200200036		Screw	2		
2	910400500005		Spring Washer	2		
3	910400100005		Flat Washer	2		
4	214544520019		Press Plate	1		
5	940200500006		Sprocket Bearing	2		
6	910401300026		Circlip	6		
7	910200800022		Screw	2		
8	910300100028		Nut	2		
9	910300500008		Nut	2		
10	212144520065		Crash Pad	2		
11	940200300060		Compound Roller	4		
12	214544510054		Stop Block	2		
13	910200200078		Screw	4		
14	214544510068		Chain	2		4500
14	214544510069		Chain	2		4920
14	214544510070		Hoop	2		6500
14	214544510071		Chain	2		7500
14	214544510072		Chain	2		8500
14	214544510073		Chain	2		9500
14	214544510074		Chain	2		10500
14.01	910600600022		Cotter Pin	2		
14.02	941100800008		Pin	2		
14.03	255044020157		Chain Bolt	1		
14.04	910600600030		Cotter Pin	2		
14.05	255044020158		Nut	2		
14.06	910300400007		Nut	2		
14.07	255044020156		Chain Bolt	1		
15	214544510015		Middle Mast	1		4500
15	214544510016		Middle Mast	1		4920
15	214544510017		Middle Mast	1		6500
15	214544510018		Middle Mast	1		7500

02 Middle Mast (214546044502) Continuation 1

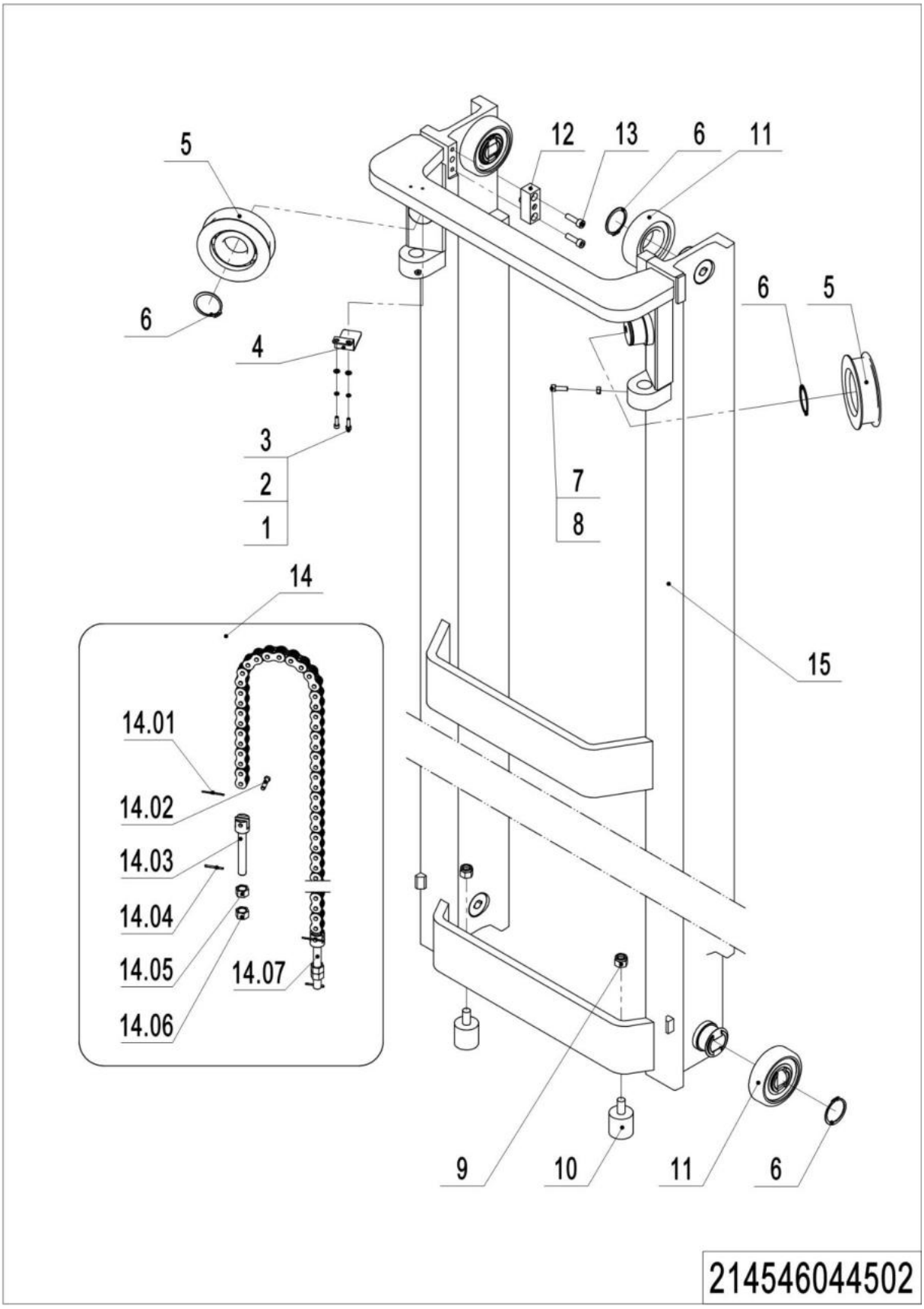

02 Middle Mast (214546044502) Continuation 1

No.	Item Code	Mark	Item Description	Qty.	Substitute	Note
15	214544510019		Middle Mast	1		8500
15	214544510020		Middle Mast	1		9500
15	214544510021		Middle Mast	1		10500

03 Inner Mast (214546044503)

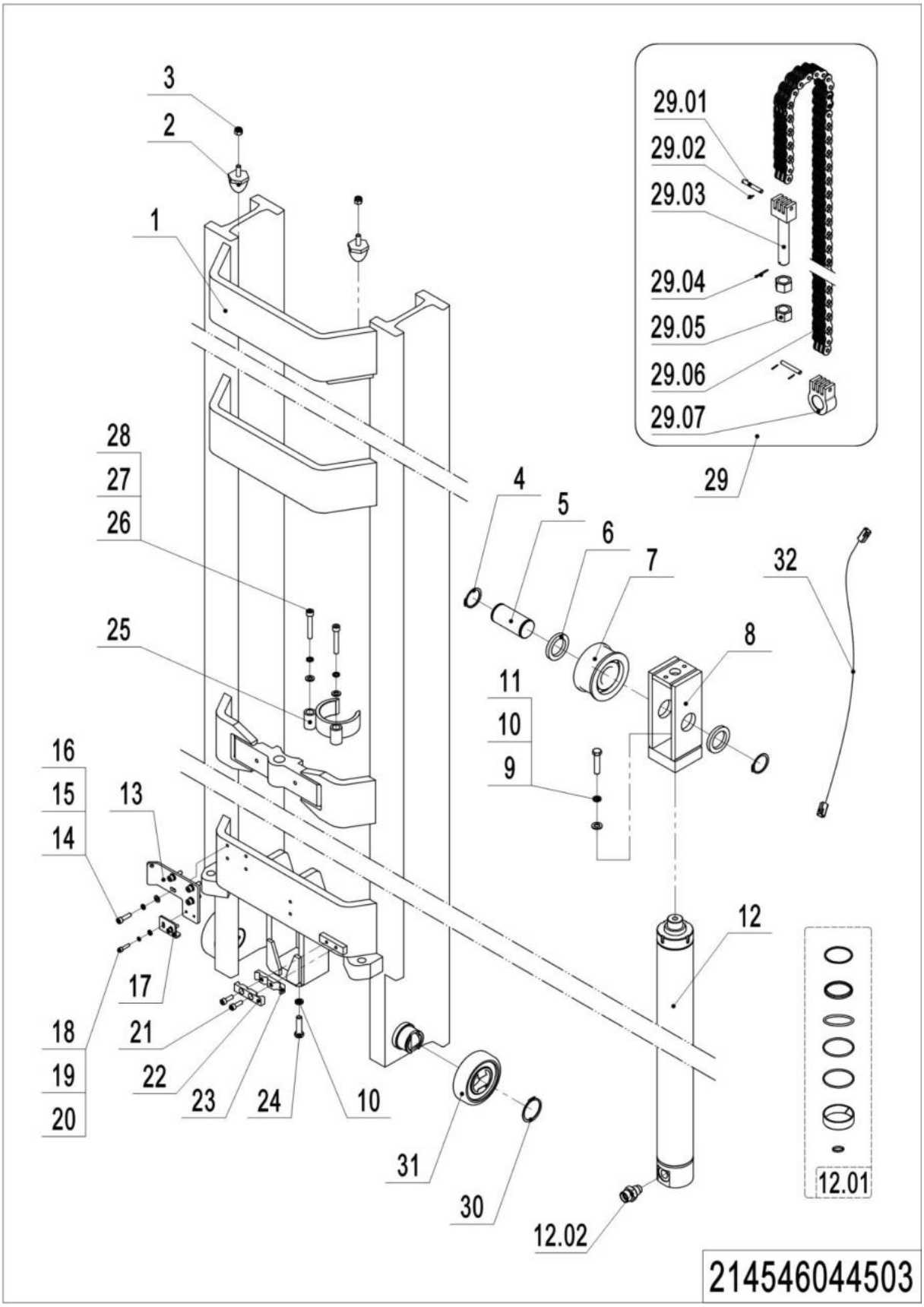

03 Inner Mast (214546044503)

No.	Item Code	Mark	Item Description	Qty.	Substitute	Note
1	214544510022		Inner Mast	1		4500
1	214544510023		Inner Mast	1		4920
1	214544510024		Inner Mast	1		6500
1	214544510025		Inner Mast	1		7500
1	214544510026		Inner Mast	1		8500
1	214544510027		Inner Mast	1		9500
1	214544510028		Inner Mast	1		10500
2	212144520242		Crash Pad	2		
3	910300500005		Nut	2		
4	910401300022		Circlip	2		
5	214544520050		Axle	1		
6	214544520083		Spacer Bush	2		
7	221044510110		Chain Pulley	1		
8	214544510052		Yoke	1		
9	910100300007		Bolt	1		
10	910400500008		Spring Washer	2		
11	910400100008		Flat Washer	1		
12	214544510041		Cylinder	1		4500
12	214544510042		Cylinder	1		4920
12	214544510043		Cylinder	1		6500
12	214544510044		Cylinder	1		7500
12	214544510045		Cylinder	1		8500
12	214544510046		Cylinder	1		9500
12	214544510047		Cylinder	1		10500
12.01	212198510003		Seal Kit	1		
12.02	212198520036		Anti-explosion Valve	1		
13	214544520080		Fixing Plate	1		
14	910200200059		Screw	4		
15	910400500006		Spring Washer	4		
16	910400100006		Flat Washer	4		

03 Inner Mast (214546044503) Continuation 1

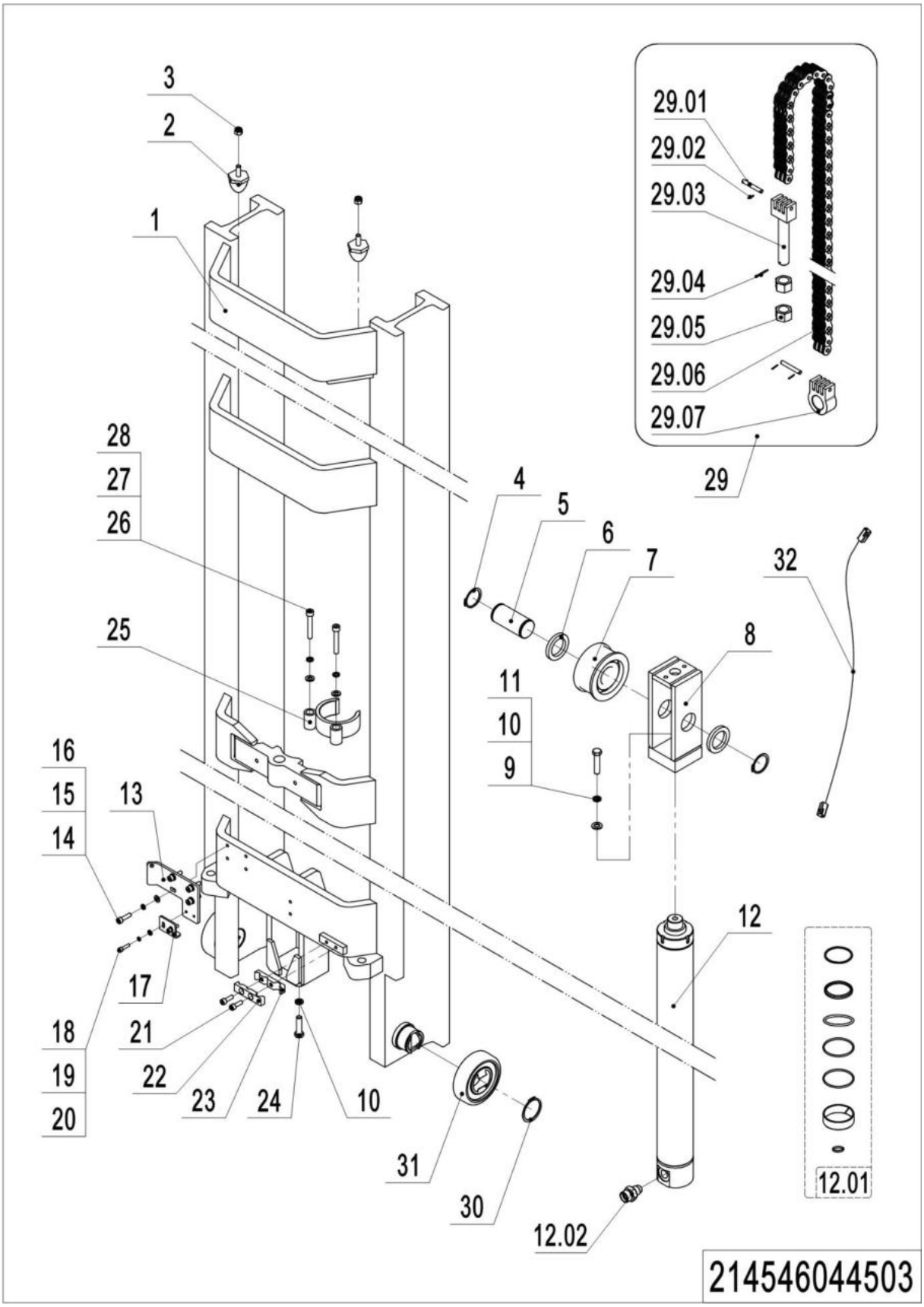

03 Inner Mast (214046044503) Continuation 1

No.	Item Code	Mark	Item Description	Qty.	Substitute	Note
17	214544520077		Press Block	1		
18	910200200036		Screw	2		
19	910400500005		Spring Washer	2		
20	910400100005		Flat Washer	2		
21	910200200058		Screw	2		
22	214544520075		Pipe Clip	1		
23	214544520018		Pipe Clip	1		
24	910100400013		Bolt	1		
25	214544510070		Hoop	1		
26	910200200079		Screw	2		
27	910400500007		Spring Washer	2		
28	910400100007		Flat Washer	2		
29	214544510075		Chain	1		4500
29	214544510076		Chain	1		4920
29	214544510077		Chain	1		6500
29	214544510078		Chain	1		7500
29	214544510079		Chain	1		8500
29	214544510080		Chain	1		9500
29	214544510081		Chain	1		10500
29.01	255044020146		Pin	2		
29.02	910600600011		Cotter Pin	4		
29.03	254143520070		Chain Anchor	1		
29.04	910600600032		Cotter Pin	1		
29.05	910300400007		Nut	2		
29.06	910900400013		Chain	1		
29.07	221044520101		Anchor	1		
30	910401300026		Circlip	2		
31	940200300060		Compound Roller	2		
32	214533010018		Wire Harness	1		10500

04 Mast Hydraulic Unit (214546044504)

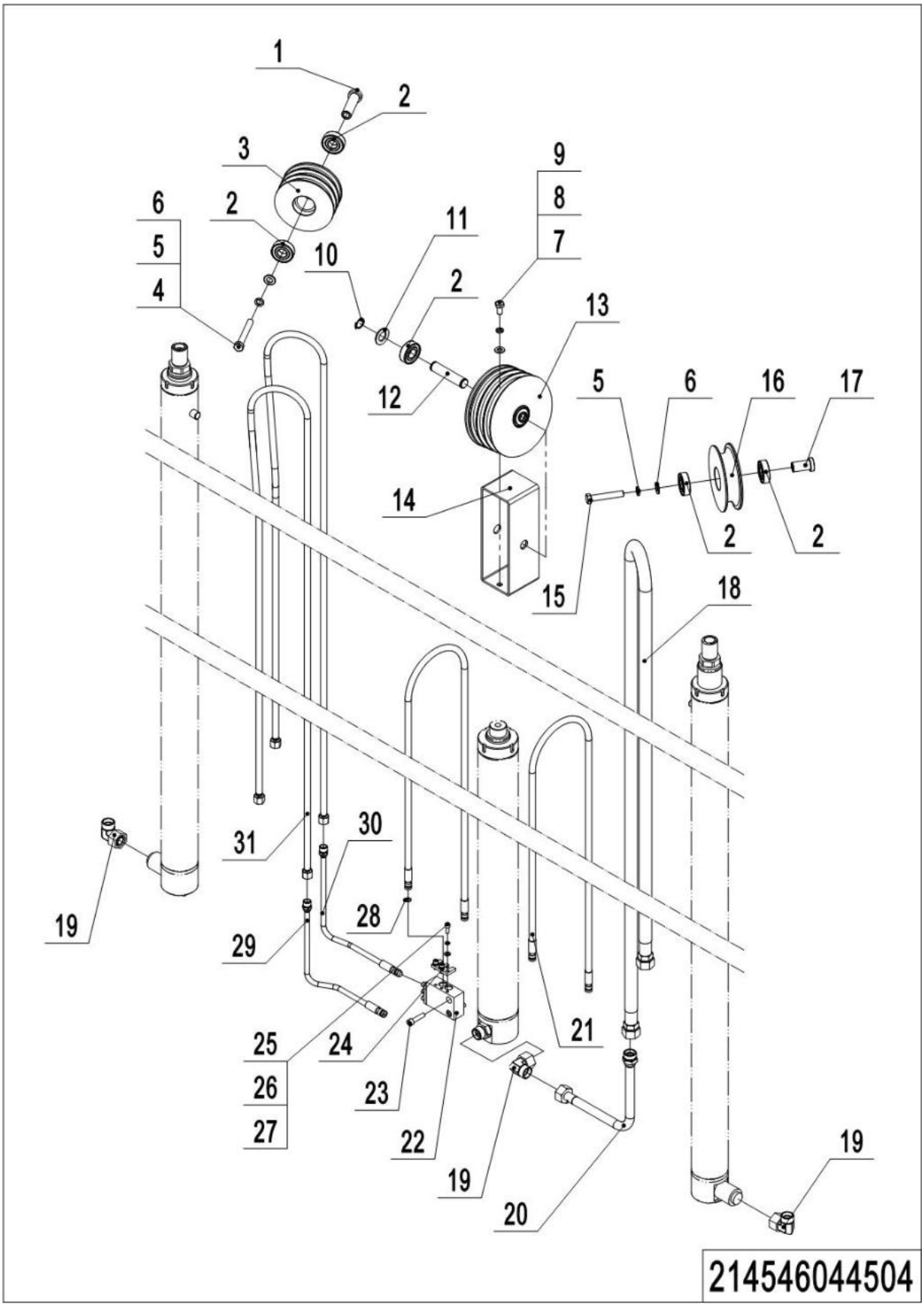

04 Mast Hydraulic Unit(214546044504)

No.	Item Code	Mark	Item Description	Qty.	Substitute	Note
1	214544520048		Sleeve	1		
2	910700200019		Bearing	6		
3	214544520053		Pulley	1		
4	910100100058		Bolt	1		
5	910400500008		Spring Washer	2		
6	212144520052		Washer	2		
7	910100300035		Bolt	2		
8	910400500007		Spring Washer	2		
9	910400100007		Flat Washer	2		
10	910401300011		Circlip	2		
11	214544520175		Flat Washer	2		
12	214544520061		Pin	1		
13	214544520165		Pulley	1		
14	214544510053		Cover	1		
15	910100100052		Bolt	1		
16	212144520050		Pulley	1		
17	212144520051		Pin	1		
18	214544520099		Hose	1		4500
18	214544520100		Hose	1		4920
18	214544520101		Hose	1		6500
18	214544520102		Hose	1		7500
18	214544520103		Hose	1		8500
18	214544520104		Hose	1		9500
18	214544520105		Hose	1		10500
19	950400200006		Joint	3		
20	214544520064		Steel Tube	1		
21	214544520156		Hose	2		4500
21	214544520157		Hose	2		4920
21	214544520087		Hose	2		6500
21	214544520088		Hose	2		7500
21	214544520089		Hose	2		8500

1=package supply; 2=restrict supply; 3=phasing-out supply; 4=supply as assembly; 5=check other tables.

04 Mast Hydraulic Unit (214546044504) Continuation 1

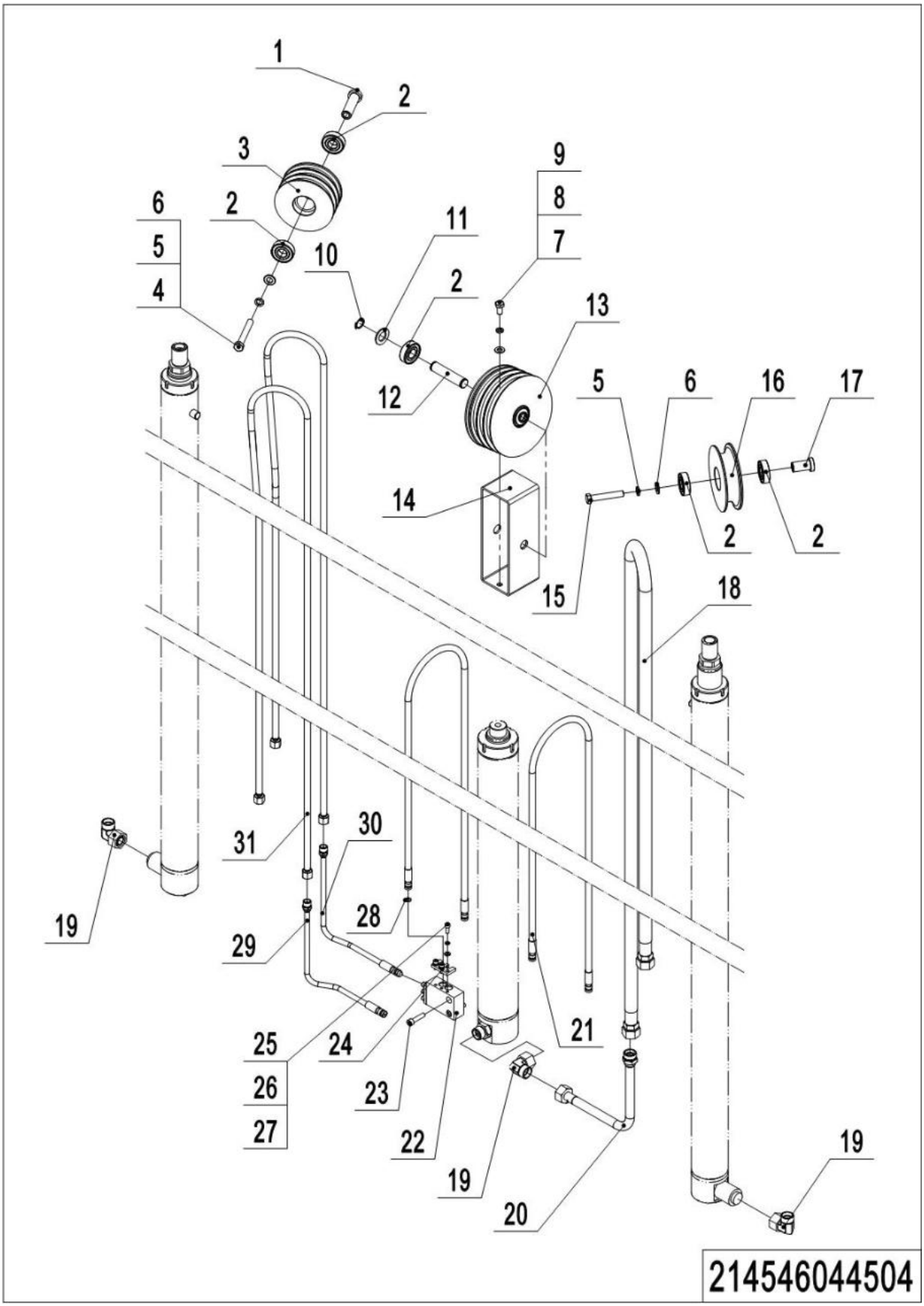

04 Mast Hydraulic Unit (214546044504) Continuation 1

No.	Item Code	Mark	Item Description	Qty.	Substitute	Note
21	214544520090		Hose	2		9500
21	214544520091		Hose	2		10500
22	214544520052		Valve Block	1		
23	910200200060		Screw	2		
24	214544520016		Plate	2		
25	910200200035		Screw	6		
26	910400500005		Spring Washer	6		
27	910400100005		Flat Washer	6		
28	910800100124		O-Ring	10		
29	214544520078		Steel Tube	1		
30	214544520079		Steel Tube	1		
31	214544520092		Hose	2		4500
31	214544520093		Hose	2		4920
31	214544520094		Hose	2		6500
31	214544520095		Hose	2		7500
31	214544520096		Hose	2		8500
31	214544520097		Hose	2		9500
31	214544520098		Hose	2		10500

05 Plexiglass Protection (214546019501)

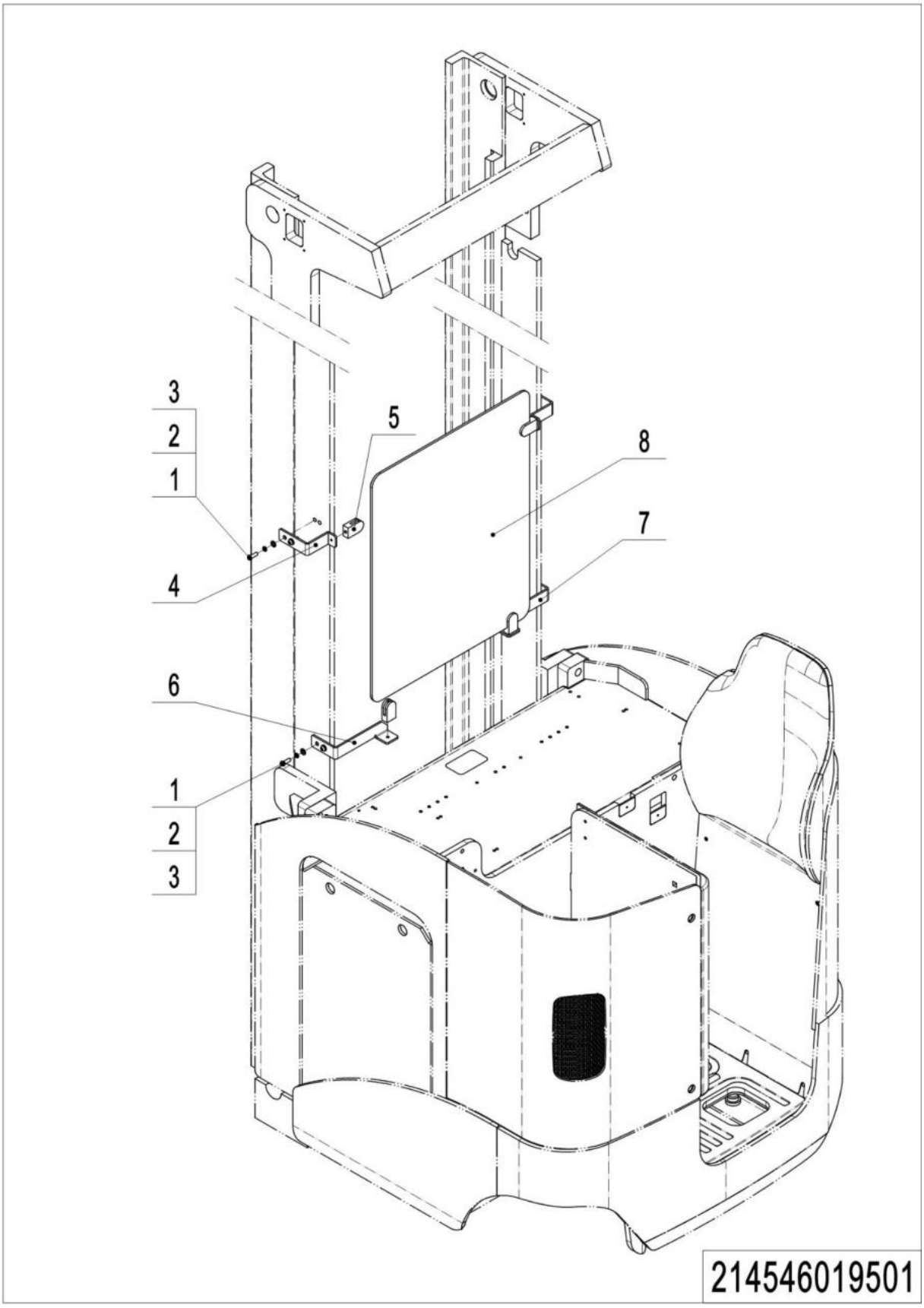

1=package supply; 2=restrict supply; 3=phasing-out supply; 4=supply as assembly; 5=check other tables.

05 Plexiglass Protection (214546019501)

No.	Item Code	Mark	Item Description	Qty.	Substitute	Note
1	910200300026		Screw	8		
2	910400500006		Spring Washer	8		
3	910400100006		Flat Washer	8		
4	214544520166		Fixing Plate	2		
5	214544510082		Support base	4		
6	214544520167		Mounting Base	1		
7	214544520168		Mounting Base	1		
8	214544520171		Guard Plate	1		

Chapter 5: Pantograph Structure (Single Pantograph)

01 Pantograph Structure (Front) (214046053001)

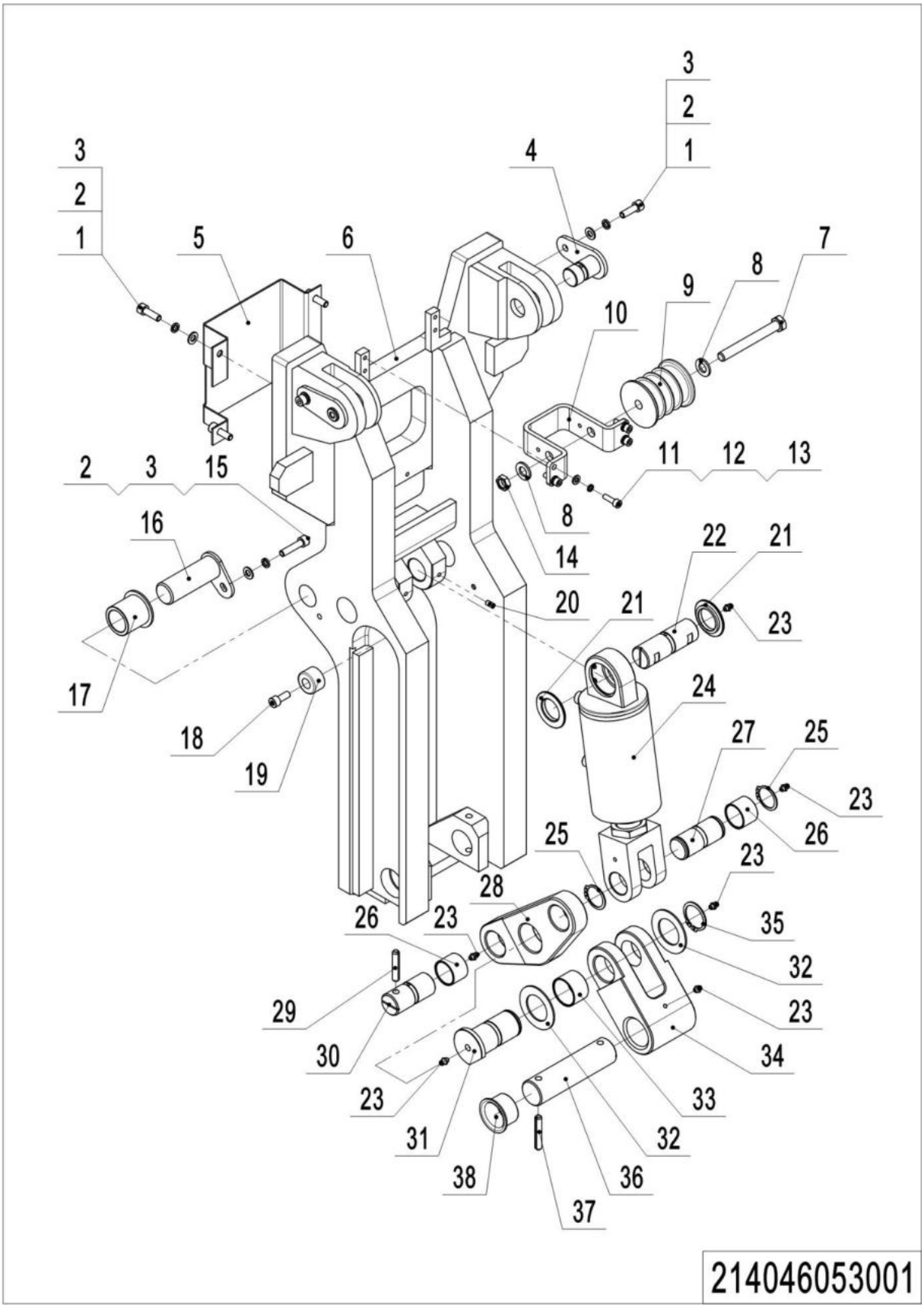

1=package supply; 2=restrict supply; 3=phasing-out supply; 4=supply as assembly; 5=check other tables.

01 Pantograph Structure (Front) (214046053001)

No.	Item Code	Mark	Item Description	Qty.	Substitute	Note
1	910200200058		Screw	6		
2	910400500006		Spring Washer	8		
3	910400100006		Flat Washer	8		
4	214053010004		Pin	2		
5	214553020075		Protective Cover	1		
6	214053010000		Pantograph Structure (Front)	1		
7	910100100058		Bolt	1		
8	910400100008		Flat Washer	2		
9	214553020077		Pulley	1		
10	214053020056		Bracket	1		
11	910200200036		Screw	4		
12	910400100005		Flat Washer	4		
13	910400500005		Spring Washer	4		
14	910300300006		Nut	1		
15	910200200060		Screw	2		
16	212138010003		Pin	2		
17	940500400031		Oilless Bearings	2		
18	910200200057		Screw	2		
19	532621520062		Crash Pad	2		
20	910200800013		Screw	2		
21	214053020040		Washer	2		
22	214053020029		Shaft	1		
23	911200100002		Nipple	6		
24	214020510000		Cylinder	1		
25	910401300016		Circlip	2		
26	940500100034		Bushing	2		
27	214053020025		Shaft	1		
28	214053020023		Link Block	1		
29	910600400047		Spring Pin	1		
30	214053020026		Shaft	1		

01 Pantograph Structure (Front) (214046053001) Continuation 1

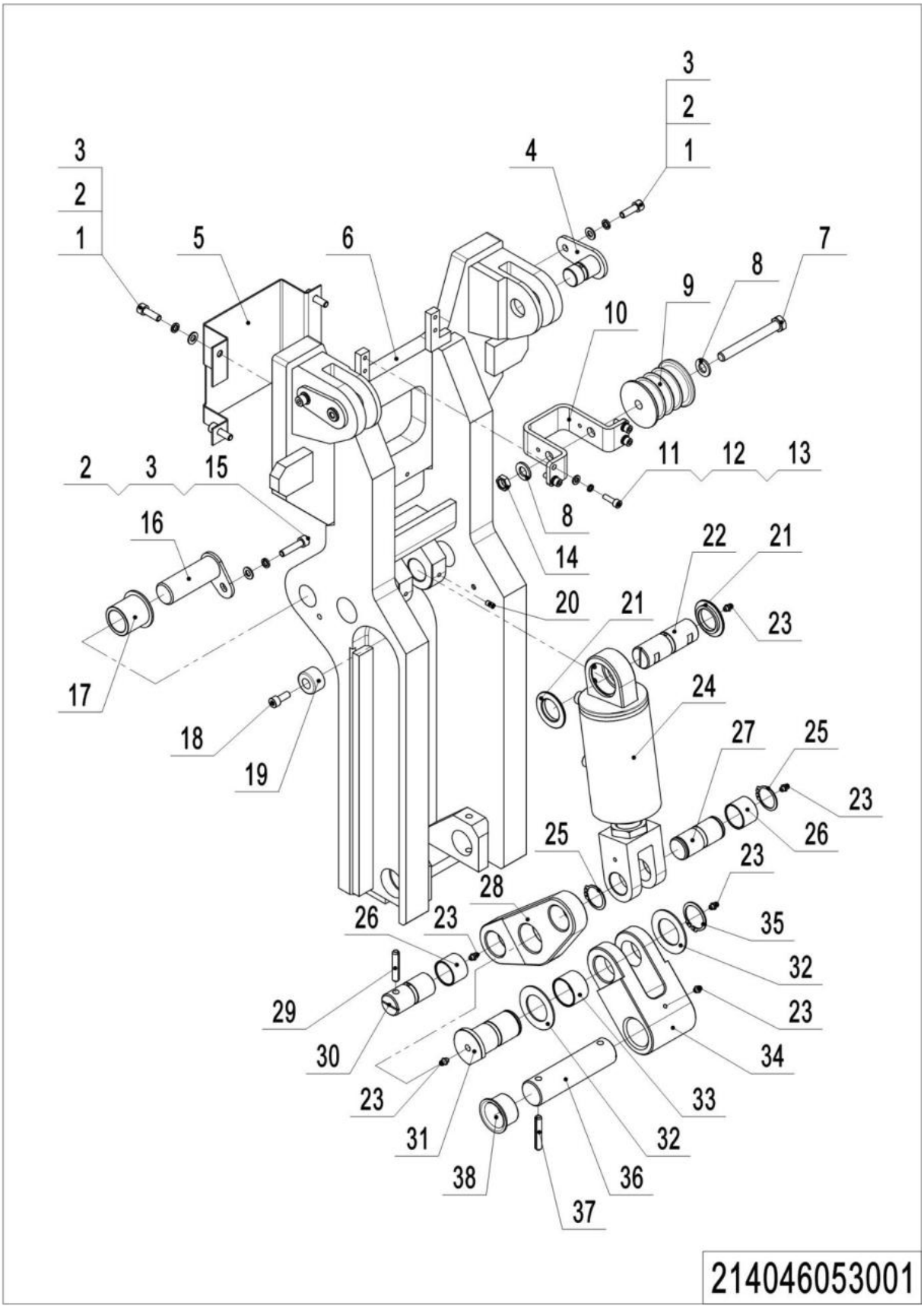

1=package supply; 2=restrict supply; 3=phasing-out supply; 4=supply as assembly; 5=check other tables.

01 Pantograph Structure (Front) (214046053001) Continuation 1

No.	Item Code	Mark	Item Description	Qty.	Substitute	Note
31	214053020027		Shaft	1		
32	214053020039		Subplate	2		
33	940500100109		Bushing	1		
34	214053020024		Mounting Base	1		
35	910401300018		Circlip	1		
36	214053020028		Shaft	1		
37	910600400048		Spring Pin	1		
38	940500200053		Bushing	1		

02 Pantograph Arm (214046053002)

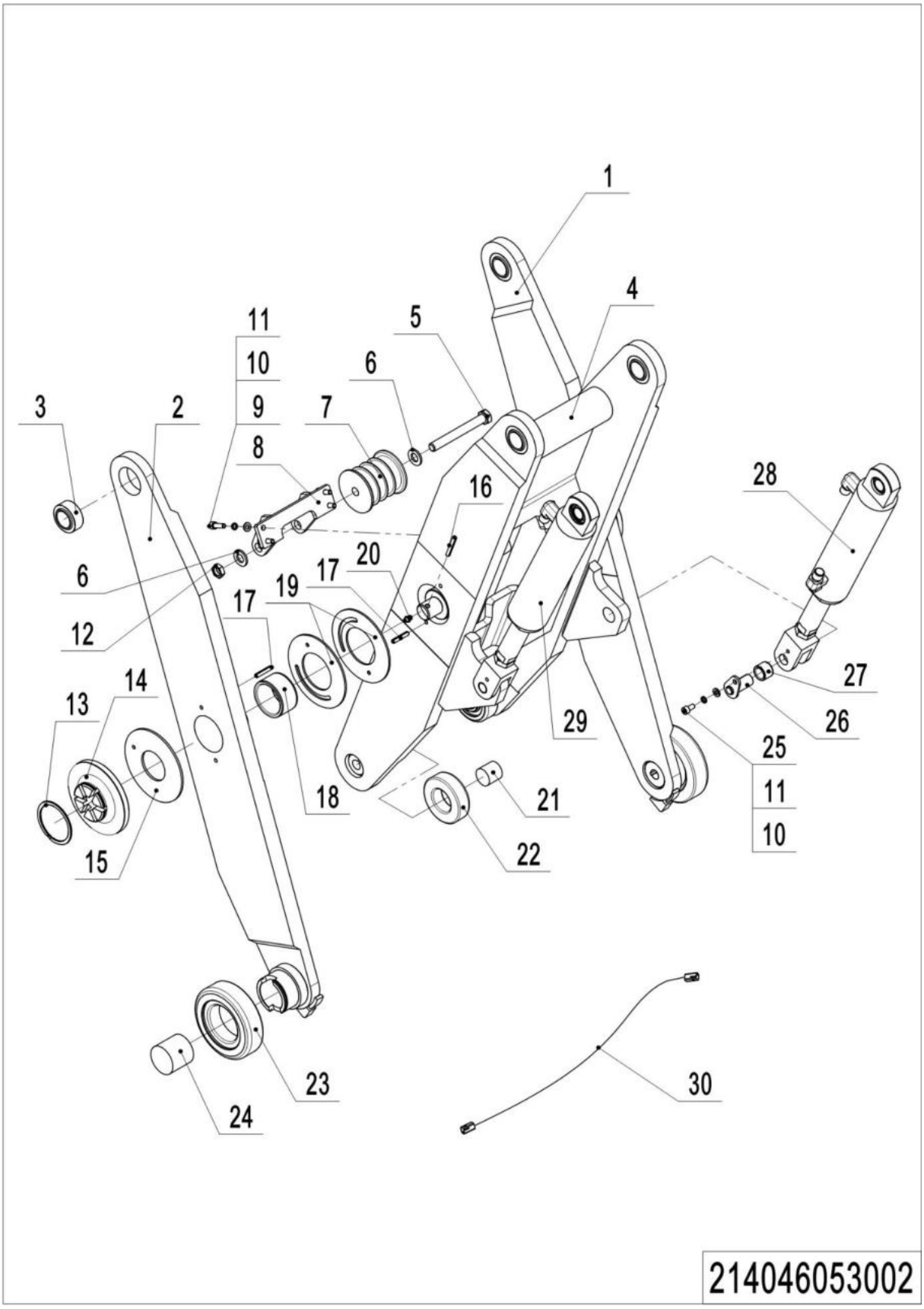

02 Pantograph Arm (214046053002)

No.	Item Code	Mark	Item Description	Qty.	Substitute	Note
1	214053010006		Outer Arm(right)	1		
2	214053010007		Outer Arm(left)	1		
3	910700900004		Bearing	4		
4	214053010002		Inner Arm	1		
5	910100100058		Bolt	1		
6	910400100008		Flat Washer	2		
7	214553020077		Pulley	1		
8	214553010006		Bracket	1		
9	910200200036		Screw	4		
10	910400500005		Spring Washer	6		
11	910400100005		Flat Washer	6		
12	910300300006		Nut	1		
13	214553020129		Circlip	2		
14	214553020051		Flange Nut	2		
15	214553020053		Washer	2		
16	910600400028		Spring Pin	2		
17	910600400025		Spring Pin	4		
18	940500400020		Oilless Bearings	2		
19	214553020055		Washer	4		
20	911200100002		Nipple	2		
21	214553020097		Adjustment Block	2		
22	940200100045		Main Roller	2		
23	940200300055		Compound Roller	2		
24	214553020098		Adjustment Block	2		
25	910200200033		Screw	2		
26	214553010007		Pin	2		
27	940500400018		Oilless Bearings	2		
28	214520010001		Cylinder(right)	1		Reach cylinder(right)
29	214520010002		Cylinder(left)	1		Reach cylinder(left)
30	214033010000		Wire Harness	1		

1=package supply; 2=restrict supply; 3=phasing-out supply; 4=supply as assembly; 5=check other tables.

03 Pantograph Structure (Back) (215046053001)

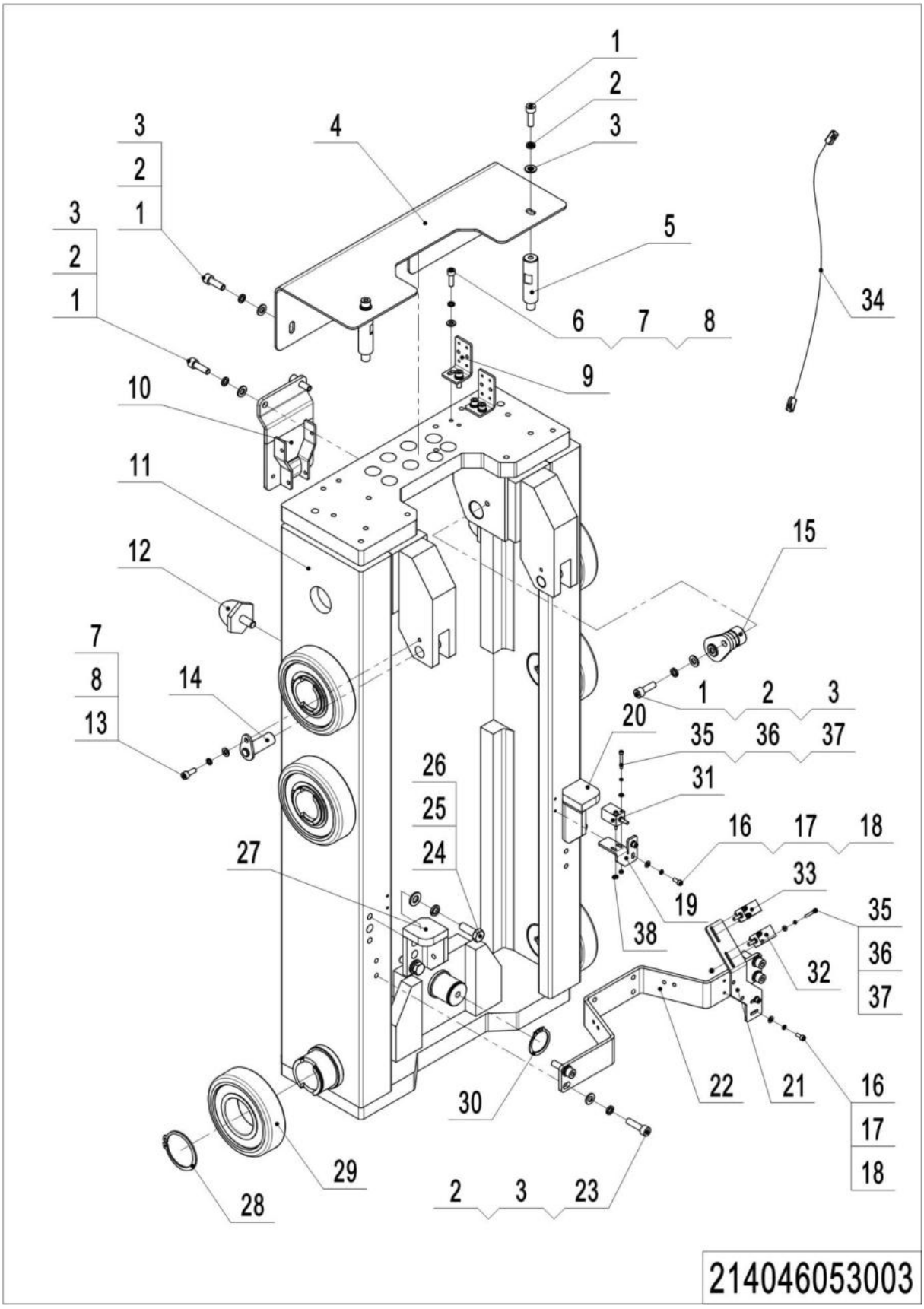

03 Pantograph Structure (Back) (215046053001)

No.	Item Code	Mark	Item Description	Qty.	Substitute	Note
1	910200200058		Screw	8		
2	910400500006		Spring Washer	12		
3	910400100006		Flat Washer	12		
4	214553010027		Baffle	1		
5	214553020069		Support	2		
6	910200200036		Screw	4		
7	910400500005		Spring Washer	6		
8	910400100005		Flat Washer	6		
9	910200200036		Screw	2		
10	214553010024		Baffle	1		
11	215053010000		Pantograph Structure (Back)	1		
12	212144520242		Crash Pad	2		
13	910200200035		Screw	2		
14	214053010003		Pin	2		
15	214053010005		Pin	2		
16	910200200013		Screw	4		
17	910400100003		Flat Washer	4		
18	910400500003		Spring Washer	4		
19	214553020057		Mounting Rack	1		
20	214553010016		Stop Block	1		
21	214553020058		Mounting Rack	1		
22	214553020068		Mounting Plate	1		
23	910200200059		Screw	4		
24	910100300037		Bolt	4		
25	910400100007		Flat Washer	4		
26	910400500007		Spring Washer	4		
27	214553010017		Stop Block	1		
28	910401300026		Circlip	6		
29	940200300060		Compound Roller	6		
30	214553020130		Circlip	1		

03 Pantograph Structure (Back) (215046053001) Continuation 1

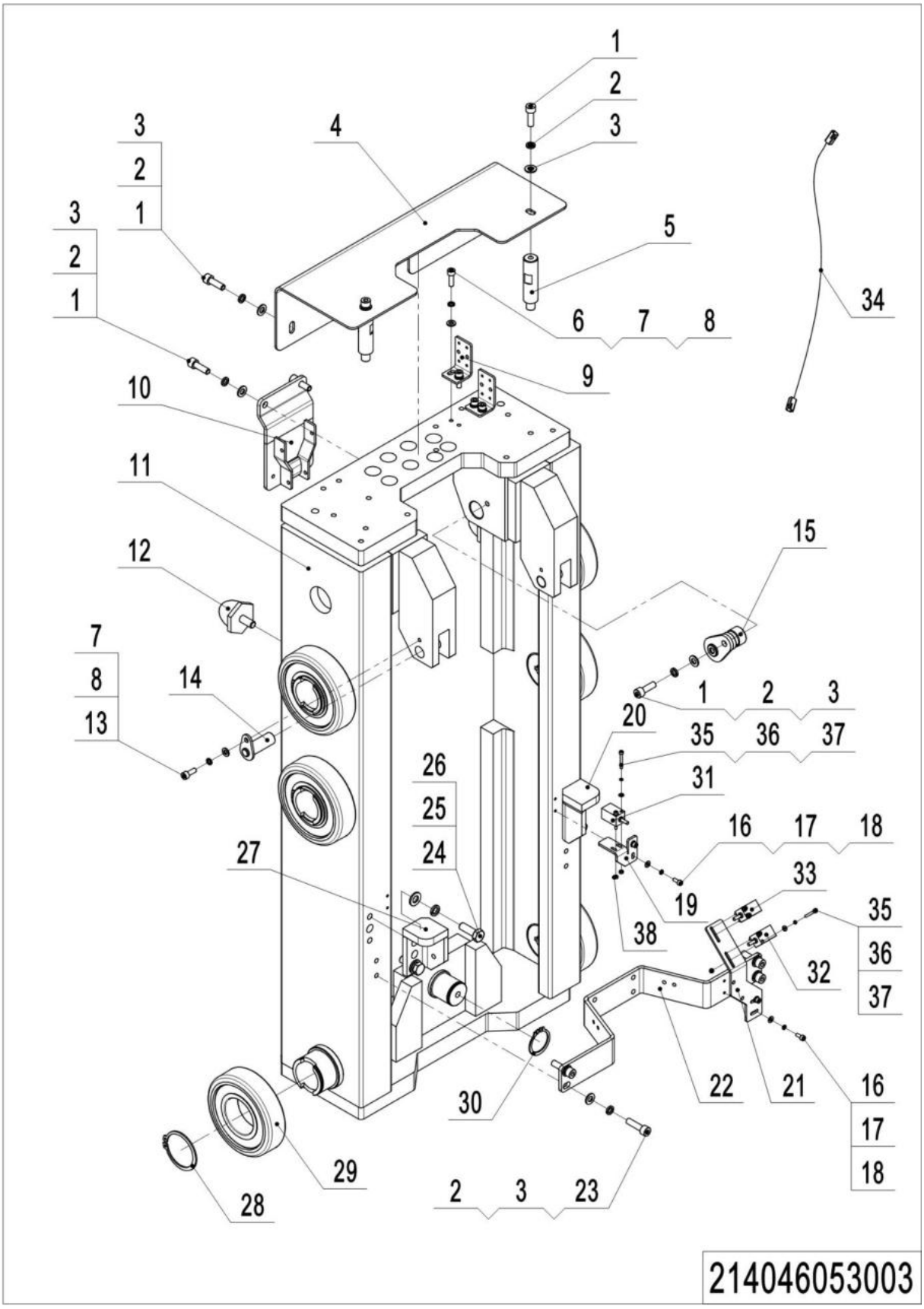

03 Pantograph Structure (Back) (215046053001) Continuation 1

No.	Item Code	Mark	Item Description	Qty.	Substitute	Note
31	214533510000		Proximity Switch	1		Forward
32	214533510001		Proximity Switch	1		Backward
33	214533510002		Proximity Switch	1		Speed limit
34	214533010016		Wire Harness	1		
35	910200200007		Screw	6		
36	910400500002		Spring Washer	6		
37	910400100002		Flat Washer	6		
38	910300100002		Nut	6		

04 Pantograph Hydraulic Unit (214046053004)

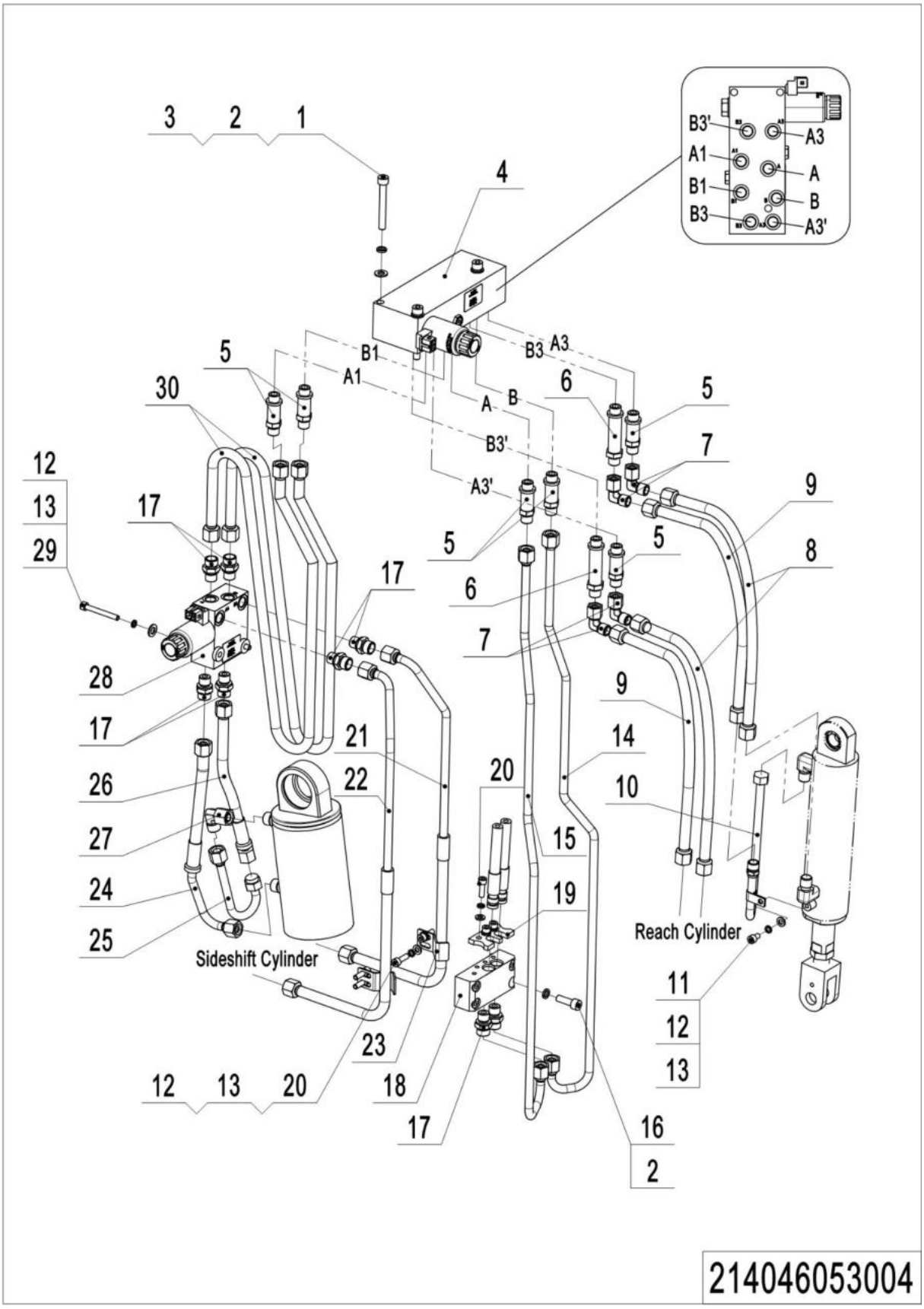

1=package supply; 2=restrict supply; 3=phasing-out supply; 4=supply as assembly; 5=check other tables.

04 Pantograph Hydraulic Unit (214046053004)

No.	Item Code	Mark	Item Description	Qty.	Substitute	Note
1	910200200066		Screw	3		
2	910400500019		Spring Washer	7		
3	910400100006		Flat Washer	3		
4	950600100039		Hydraulic Valve	1		
5	214553020123		Adapter	6		
6	214553020122		Adapter	2		
7	950400200002		Joint	4		
8	214553020124		Hose	2		
9	214553020125		Hose	2		
10	214553020128		Steel Tube	1		Reach cylinder(right)
10	214553020132		Steel Tube	1		Reach cylinder(left)
11	910200200032		Screw	2		
12	910400500005		Spring Washer	9		
13	910400100005		Flat Washer	9		
14	214053020045		Steel Tube	1		
15	214053020044		Steel Tube	1		
16	910200200058		Screw	4		
17	950400400001		Joint	8		
18	214553020059		Valve Block	1		
19	214553020060		Plate	1		
20	910200200035		Screw	5		
21	214053020052		Hose	1		
22	214053020053		Hose	1		
23	214053020057		Pipe Clip	2		
24	214053020049		Hose	1		
25	214053020054		Steel Tube	1		
26	214053020051		Hose	1		
27	950400200003		Joint	1		
28	950600100038		Hydraulic Valve	1		
29	910200200043		Screw	2		
30	214053020050		Hose	2		

05 Fork Carriage (215046053002)

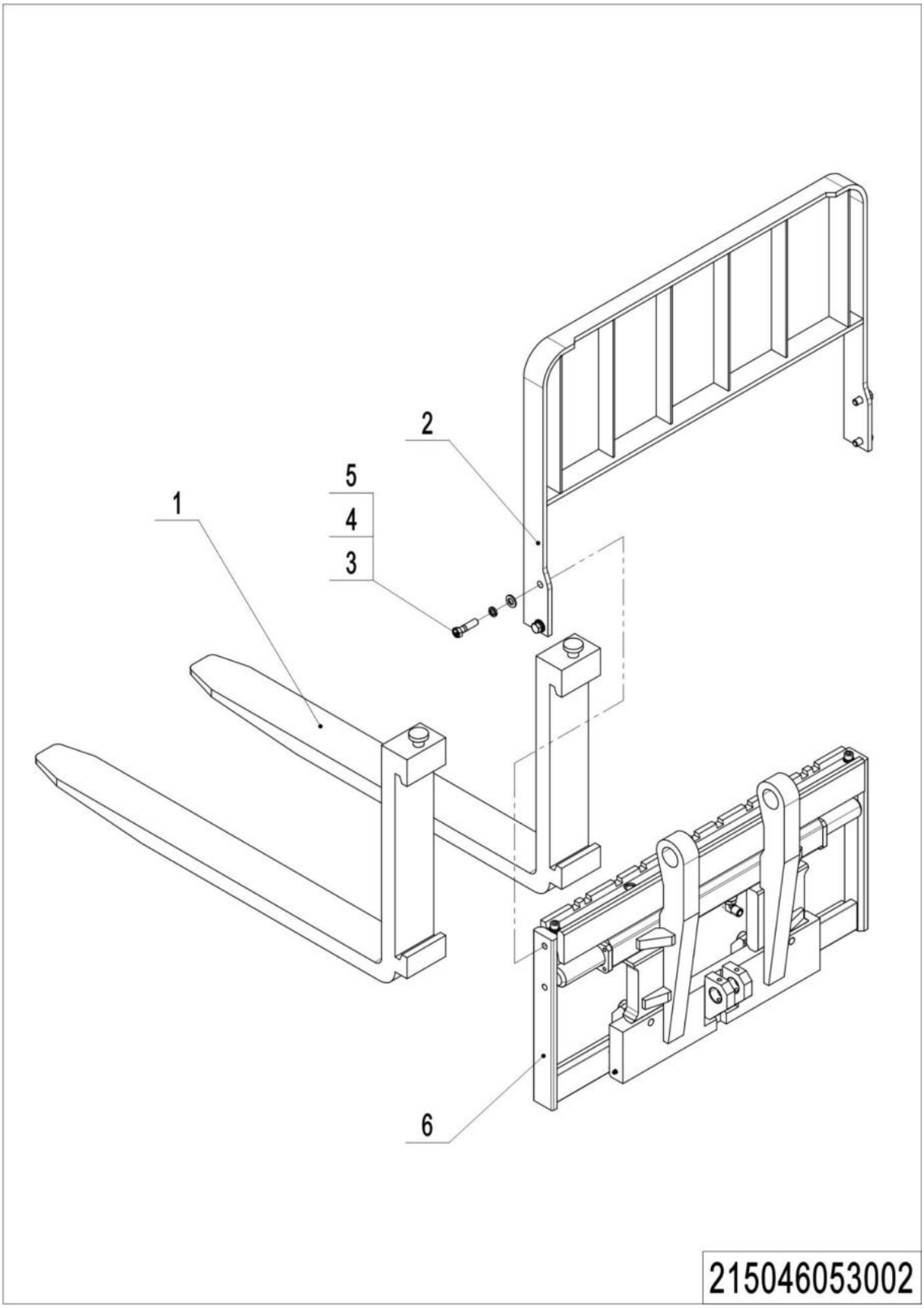

1=package supply; 2=restrict supply; 3=phasing-out supply; 4=supply as assembly; 5=check other tables.

05 Fork Carriage (215046053002)

No.	Item Code	Mark	Item Description	Qty.	Substitute	Note
1	940100100036		Fork120x40x920	1		
1	940100100008		Fork120x40x1070	1		
1	940100100010		Fork120x40x1150	1		
1	940100100009		Fork120x40x1220	1		
1	940100100011		Fork120x40x1370	1		
2	214540510000		Load Backrest(818)	1		
3	910100300050		Bolt	4		
4	910400500008		Spring Washer	4		
5	910400100008		Flat Washer	4		
6	940100200012		Side Shifter	1		

Chapter 6: Steering System and Wheels

01 Steering Wheel (214546031501)

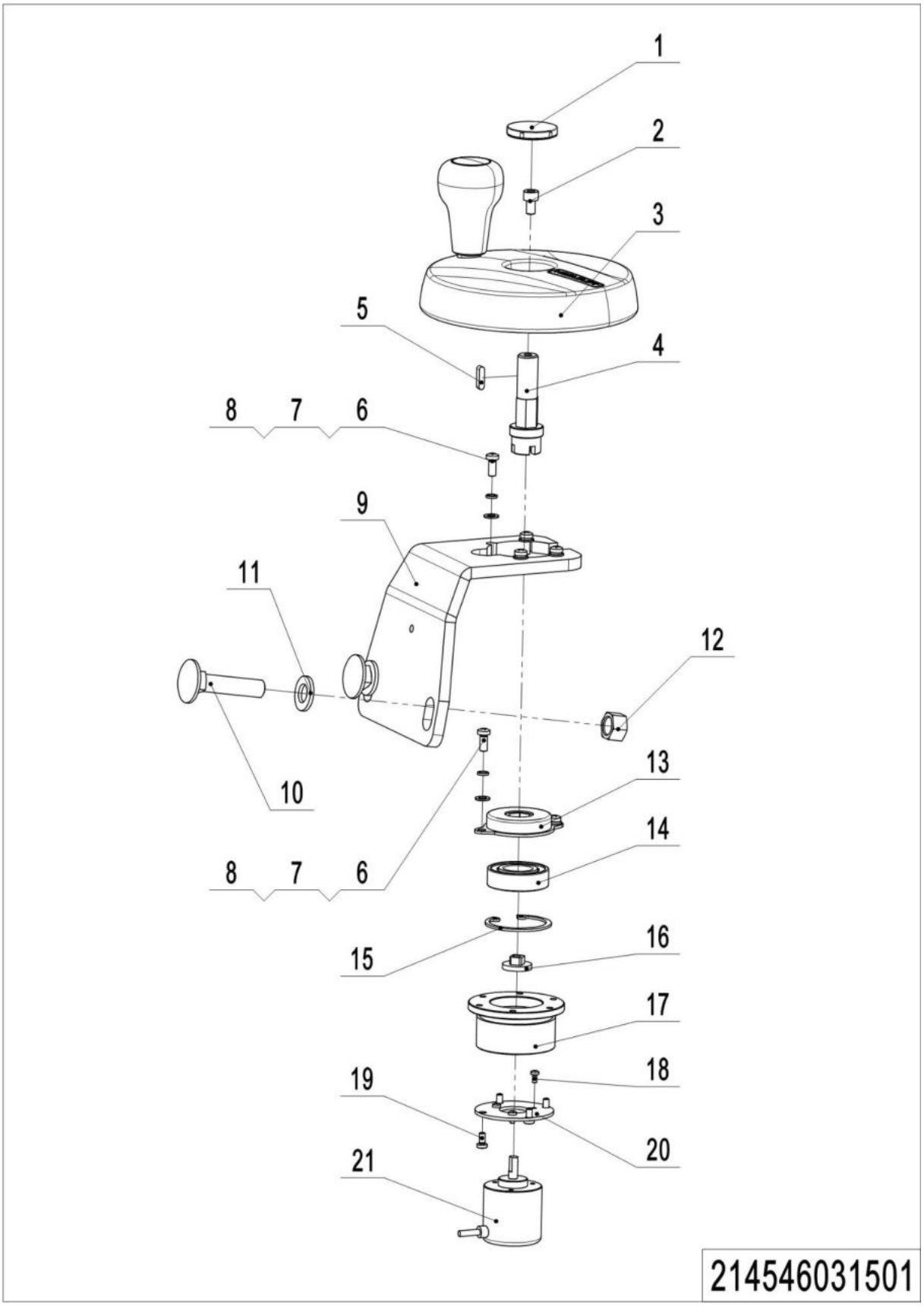

1=package supply; 2=restrict supply; 3=phasing-out supply; 4=supply as assembly; 5=check other tables.

01 Steering Wheel (214546031501)

No.	Item Code	Mark	Item Description	Qty.	Substitute	Note
1	212131520006		Washer	1		
2	910200400015		Screw	1		
3	940801700001		Handwheel	1		
4	212131520005		Axle	1		
5	910600800004		Flat Key	1		
6	910200500038		Screw	6		
7	910400100004		Flat Washer	6		
8	910400500004		Spring Washer	6		
9	214531520000		Fixing Plate	1		
10	910100900004		Bolt	2		
11	910400100008		Flat Washer	2		
12	910300100008		Nut	2		
13	271531511021		Rotary Damper	1		
14	910700200004		Bearing	1		
15	910401400012		Circlip	1		
16	505931520002		Link Block	1		
17	212131520007		Bracket	1		
18	910200500009		Screw	3		
19	910200500021		Screw	4		
20	212131520008		Fixing Plate	1		
21	921800200039		Potentiometer	1		

02 Load wheel (214546017001)

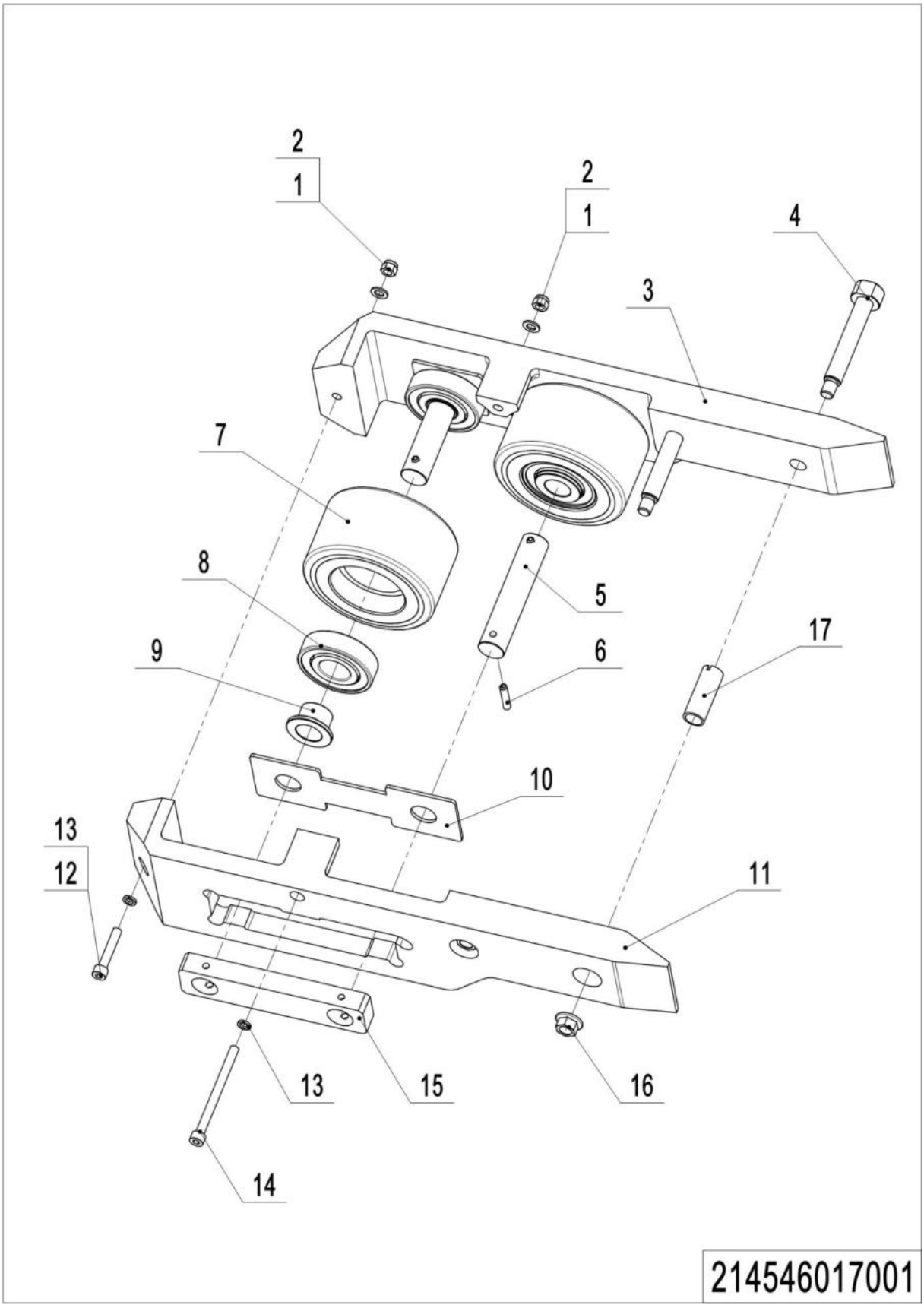

1=package supply; 2=restrict supply; 3=phasing-out supply; 4=supply as assembly; 5=check other tables.

02 Load wheel (214546017001)

No.	Item Code	Mark	Item Description	Qty.	Substitute	Note
1	910400100006		Flat Washer	2		
2	910300500004		Nut	2		
3	214517020012		Fixing Plate	1		Left (outer)
3	214517020005		Fixing Plate	1		Right (outer)
4	214517020009		Pin	2		
5	214517020002		Axle	2		
6	910600400039		Spring Pin	2		
7	940300300057		Wheel Φ127x74	2		
8	910700200032		Bearing	4		
9	214517020003		Sleeve	4		
10	214517020008		Subplate	2		
11	214517020013		Fixing Plate	1		Left (inner)
11	214517020011		Fixing Plate	1		Right (inner)
12	910200200215		Screw	1		
13	910400500019		Spring Washer	2		
14	910200200214		Screw	1		
15	214517020010		Fixing Plate	2		
16	910302600002		Nut	2		
17	214517020014		Sleeve	1		

Chapter 7: Electrical Parts

01 Controller Assembly F4A (214546033001)

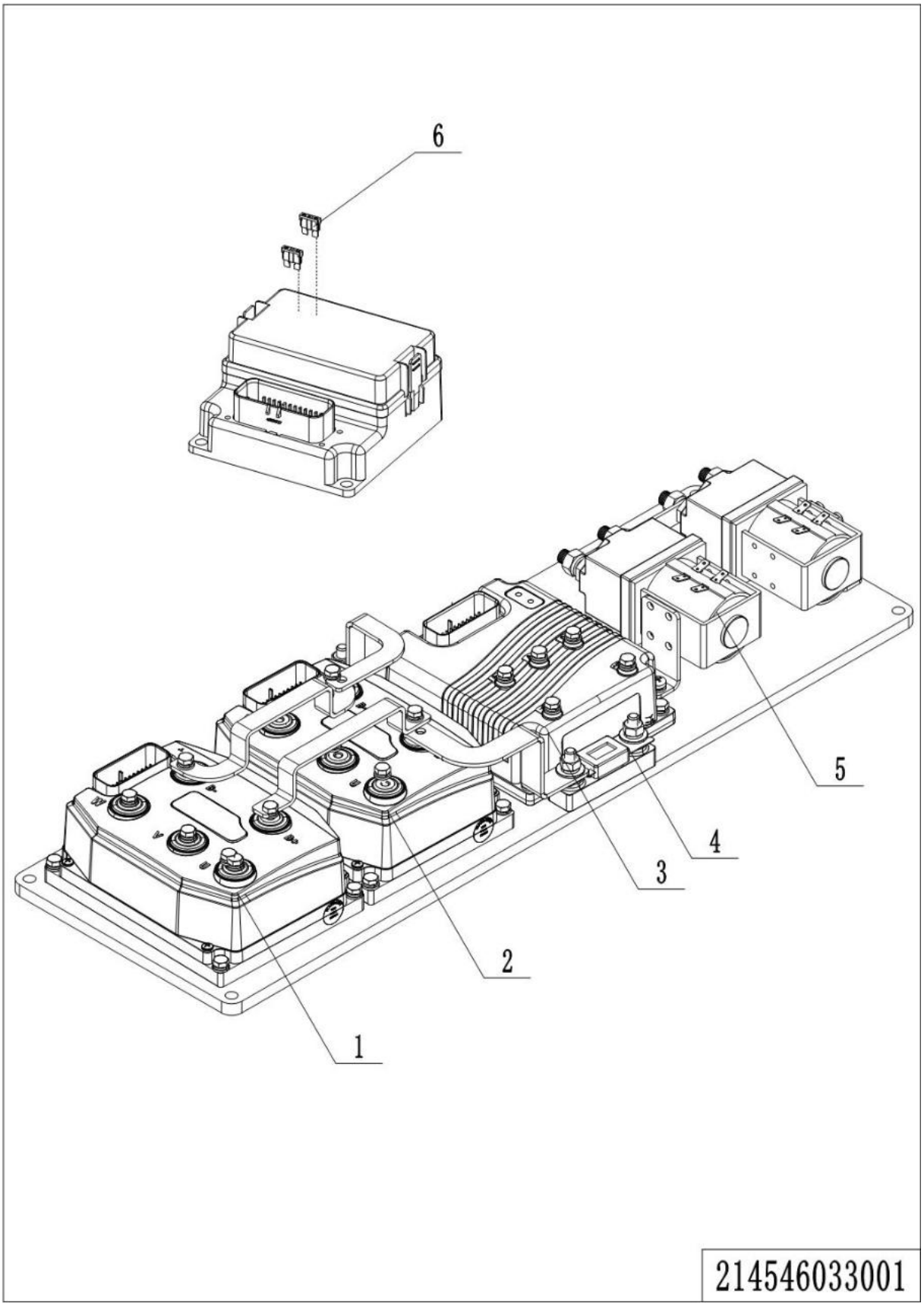

1=package supply; 2=restrict supply; 3=phasing-out supply; 4=supply as assembly; 5=check other tables.

01 Controller Assembly F4A (214546033001)

No.	Item Code	Mark	Item Description	Qty.	Substitute	Note
1	921400100184		Controller	1		Pump controller
2	921400100156		Controller	1		Traction controller
3	921400100004		Controller	1		Steering controller
4	920100100014		Fuse	1		500A
5	920700100035		Contactor	2		
6	920100200002		Fuse	5		10A

02 Wire Harness F4A (214546033002)

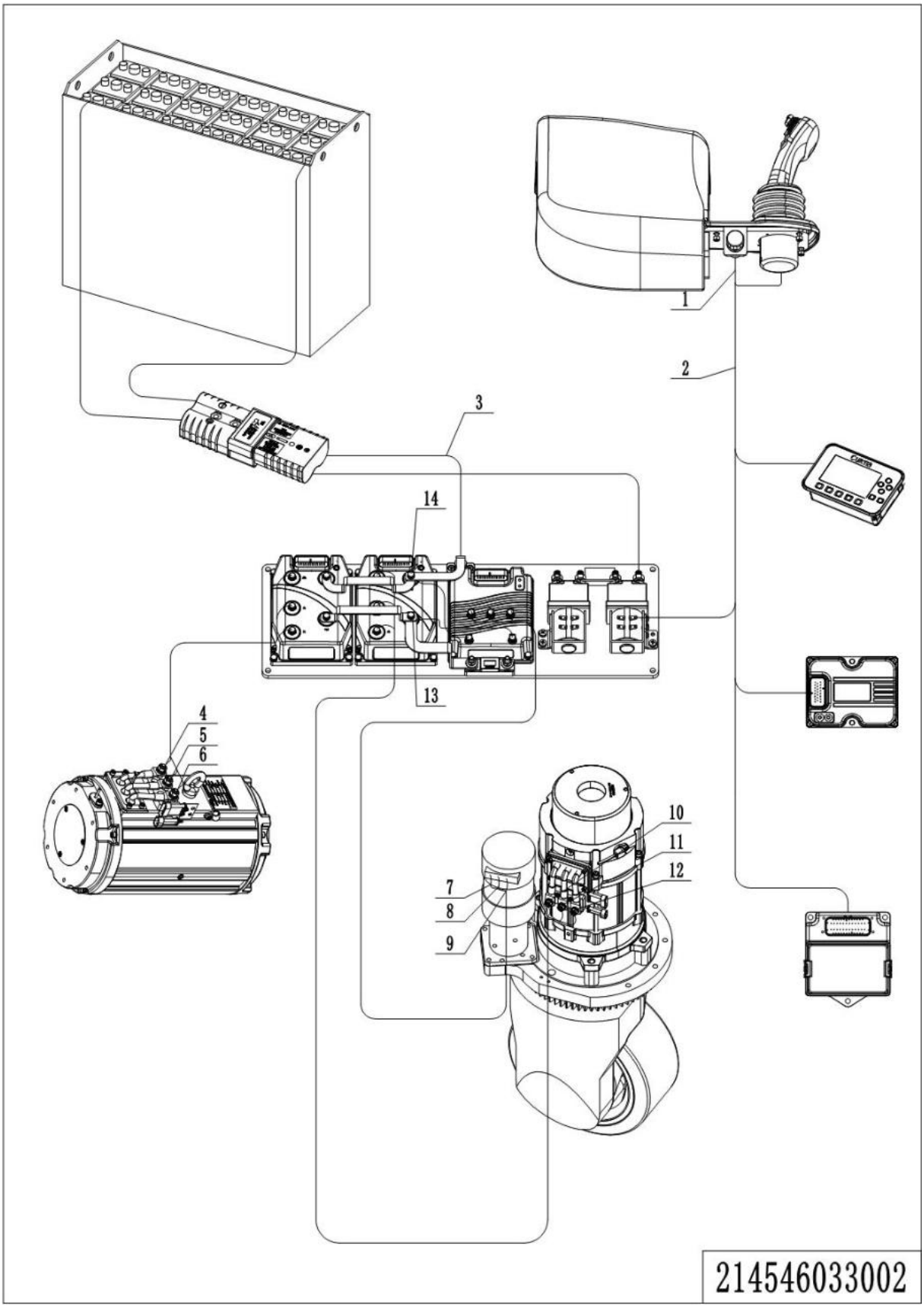

1=package supply; 2=restrict supply; 3=phasing-out supply; 4=supply as assembly; 5=check other tables.

02 Wire Harness F4A (214546033002)

No.	Item Code	Mark	Item Description	Qty.	Substitute	Note
1	214533010017		Wire Harness	1		
2	214533010000		Wire Harness	1		
3	214533010010		Wire Harness	1		
4	214533010004		Cable	1		
5	214533010005		Cable	1		
6	214533010006		Cable	1		
7	214533010007		Cable	1		
8	214533010008		Cable	1		
9	214533010009		Cable	1		
10	214533010001		Cable	1		
11	214533010002		Cable	1		
12	214533010003		Cable	1		
13	214533010012		Cable	1		
14	214533010013		Cable	1		

03 Lead-acid Battery Charger-1 (214546036501)

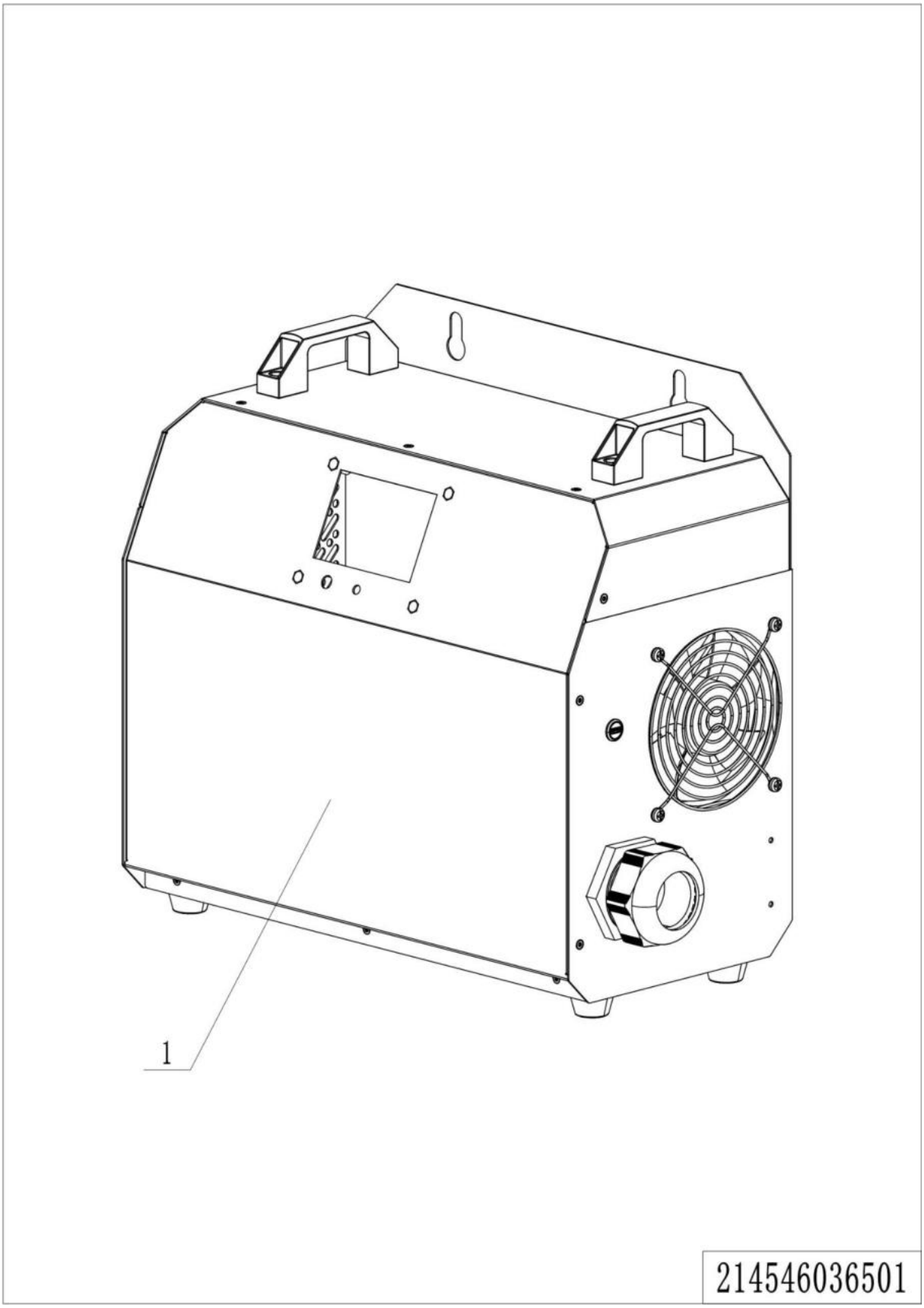

1=package supply; 2=restrict supply; 3=phasing-out supply; 4=supply as assembly; 5=check other tables.

03 Lead-acid Battery Charger-1 (214546036501)

No.	Item Code	Mark	Item Description	Qty.	Substitute	Note
1	921000200835		Charger 36V100A	1		US,480V
2	921000200837		Charger 36V120A	1		US,480V
3	921000200792		Charger 36V100A	1		Aisa-ENG,380V
4	921000200793		Charger 36V120A	1		Aisa-ENG,380V

04 Lead-acid Battery Charger-2 (214546036502)

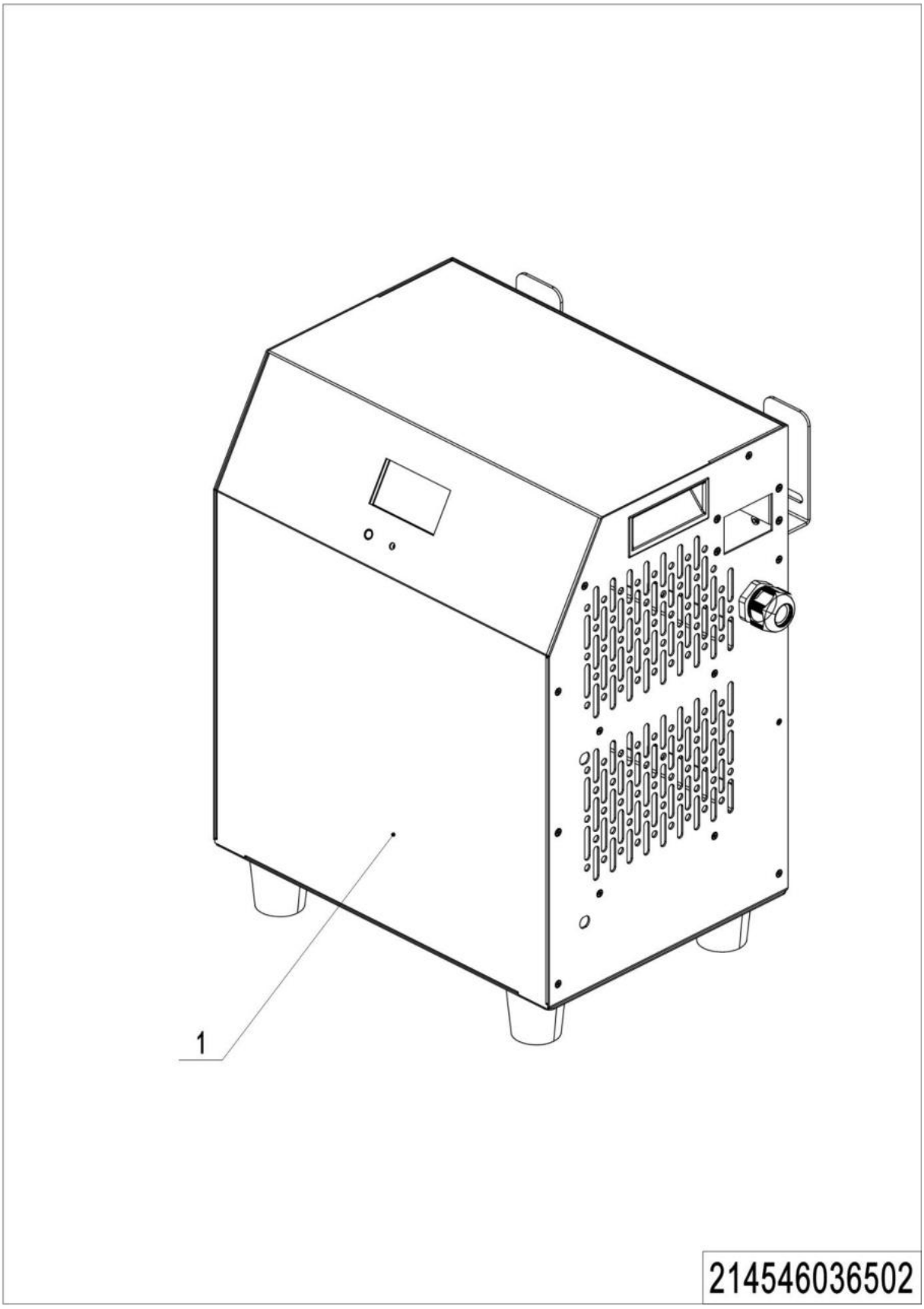

1=package supply; 2=restrict supply; 3=phasing-out supply; 4=supply as assembly; 5=check other tables.

04 Lead-acid Battery Charger-2 (214546036502)

No.	Item Code	Mark	Item Description	Qty.	Substitute	Note
1	921000200834		Charger 36V100A	1		US,220V
2	921000200836		Charger 36V120A	1		US,220V

05 Lithium Battery Charger (214546036503)

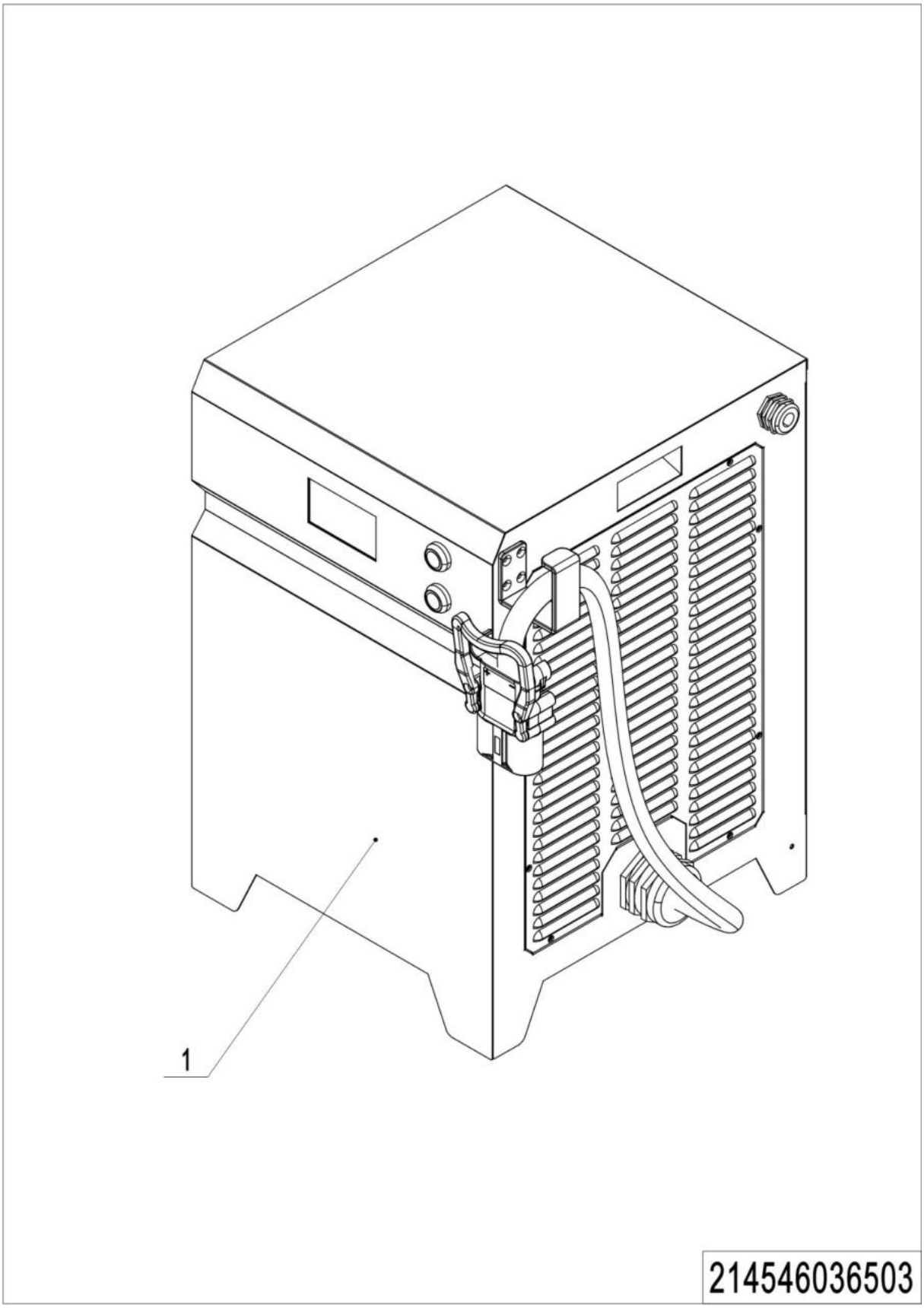

1=package supply; 2=restrict supply; 3=phasing-out supply; 4=supply as assembly; 5=check other tables.

05 Lithium Battery Charger (214546036503)

No.	Item Code	Mark	Item Description	Qty.	Substitute	Note
1	921000200830		ChargerADY36V180A	1		US,220V
2	921000200831		ChargerADY36V180A	1		US,480V

Chapter 8: Special Parts

01 Lead-acid Battery (214546037001)

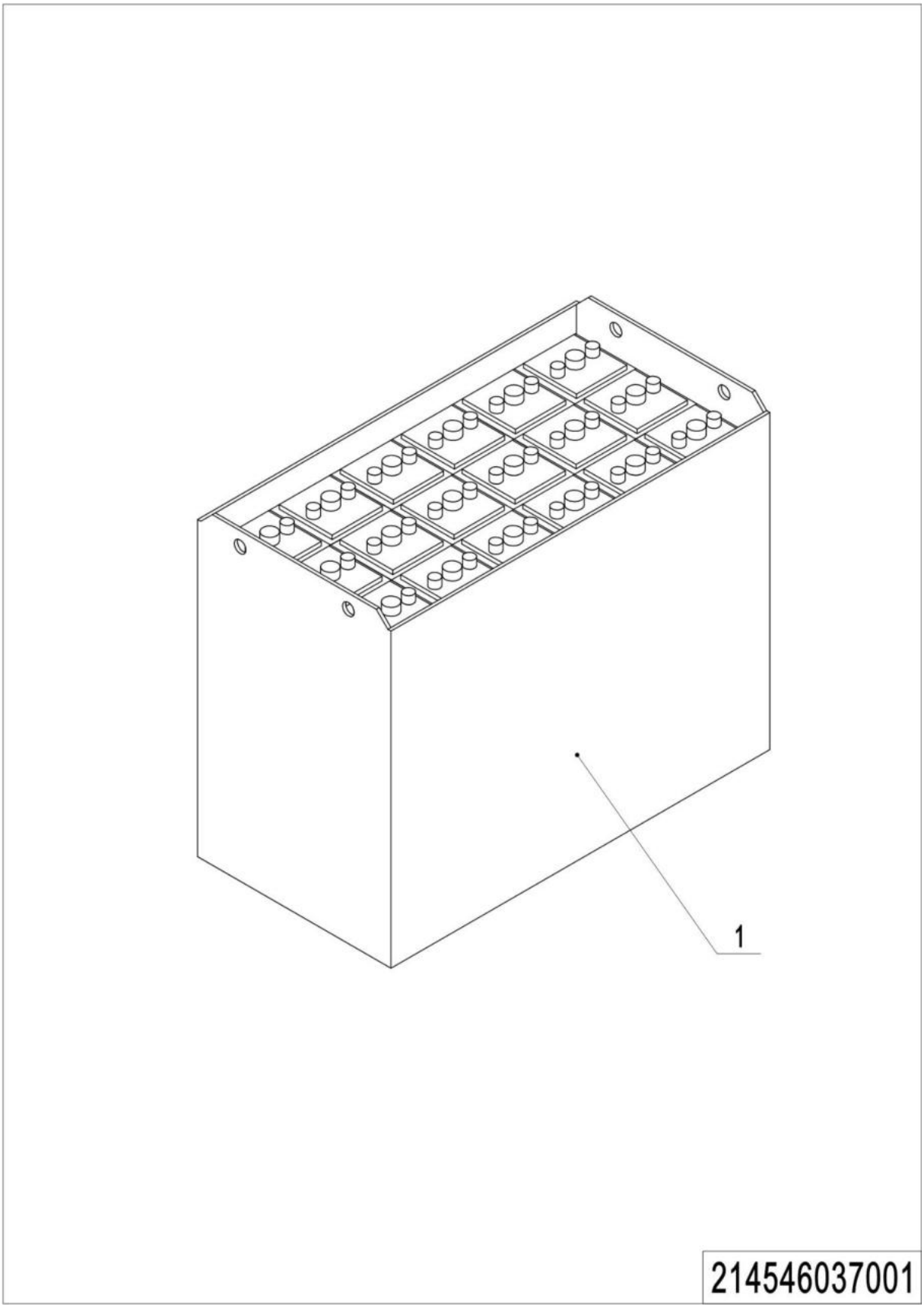

1=package supply; 2=restrict supply; 3=phasing-out supply; 4=supply as assembly; 5=check other tables.

01 Lead-acid Battery (214546037001)

No.	Item Code	Mark	Item Description	Qty.	Substitute	Note
1	214537010000		Battery 36V700Ah	1		
1	214537010001		Battery 36V700Ah(welded)	1		
1	214537010002		Battery 36V800Ah	1		
1	214537010003		Battery 36V800Ah(welded)	1		
1	214537010004		Battery 36V900Ah	1		
1	214537010005		Battery 36V900Ah(welded)	1		
1	214537010006		Battery 36V600Ah	1		
1	214537010007		Battery 36V600Ah(welded)	1		

02 Lithium Battery (214546037002)

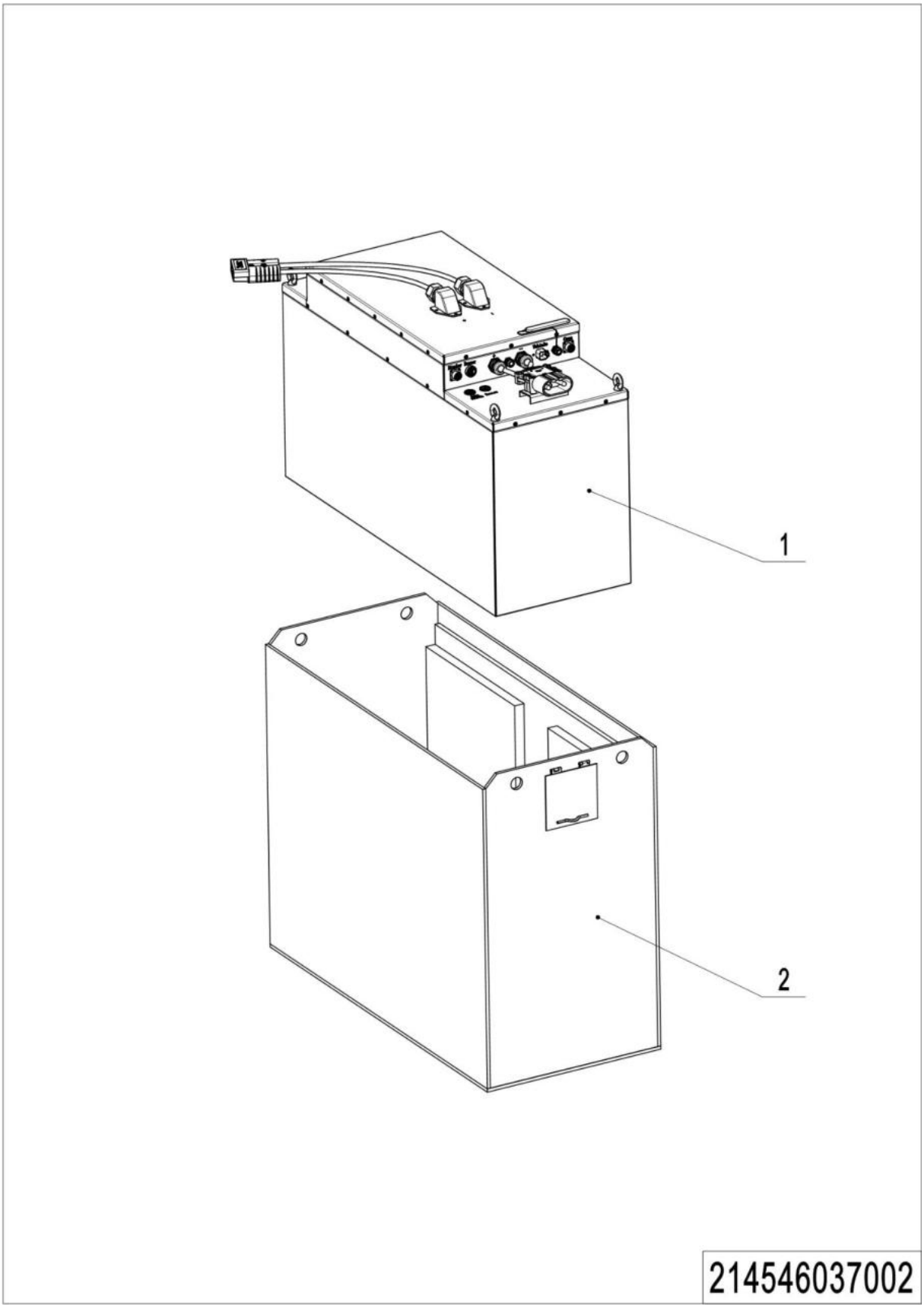

1=package supply; 2=restrict supply; 3=phasing-out supply; 4=supply as assembly; 5=check other tables.

02 Lithium Battery (214546037002)

No.	Item Code	Mark	Item Description	Qty.	Substitute	Note
1	920600100635		Battery 36V554Ah	1		
2	214537010011		Weight Box	1		600
2	214537010008		Weight Box	1		700
2	214537010009		Weight Box	1		800
2	214537010010		Weight Box	1		900

03 Camera (214546036001)

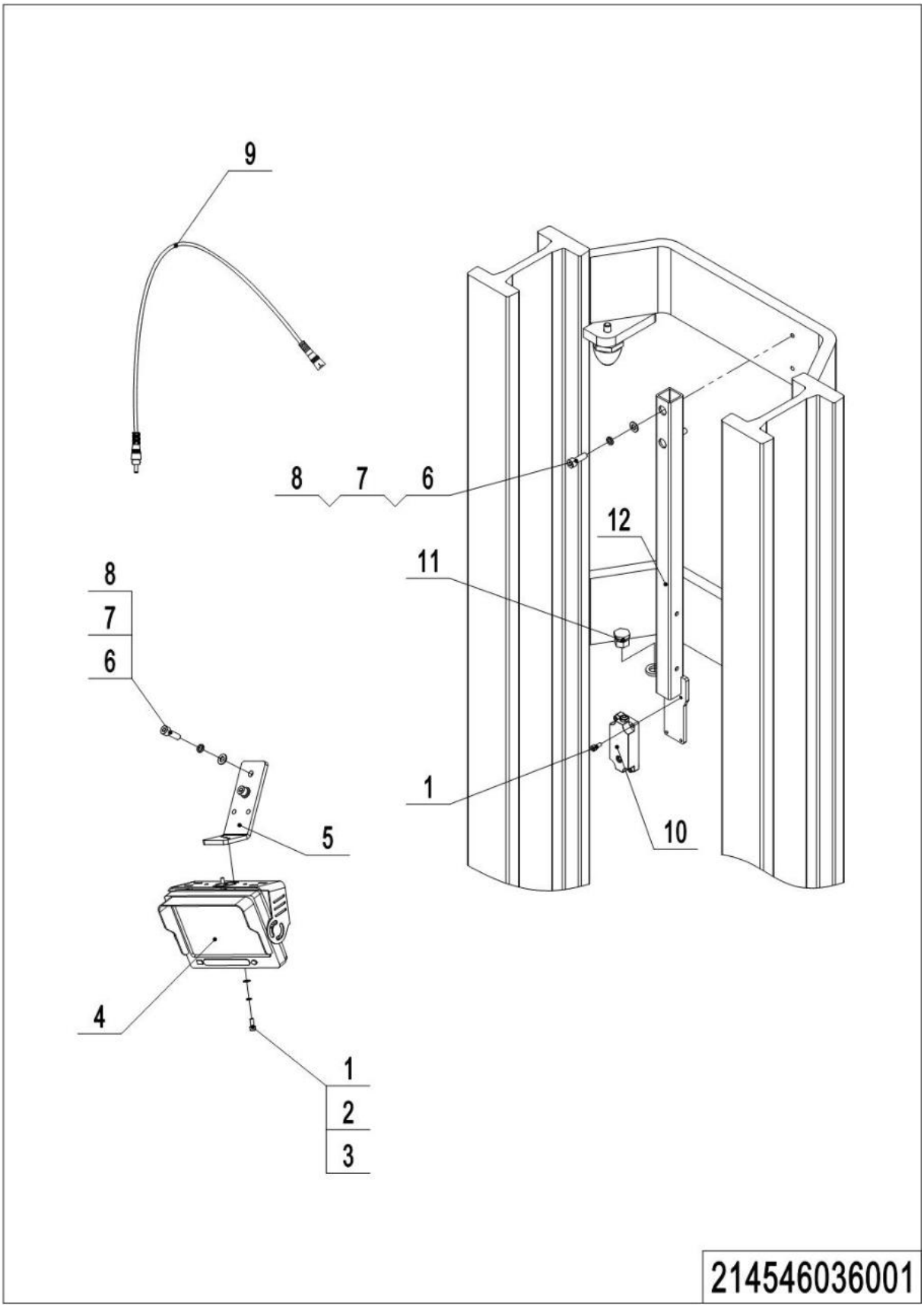

1=package supply; 2=restrict supply; 3=phasing-out supply; 4=supply as assembly; 5=check other tables.

03 Camera (214546036001)

No.	Item Code	Mark	Item Description	Qty.	Substitute	Note
1	910200200022		Screw	6		
2	910400500004		Spring Washer	2		
3	910400100004		Flat Washer	2		
4	921100100144		Display	1		
4	921100100143		Display	1		256G SD card
5	214536020003		Mounting Plate	1		
6	910200200058		Screw	4		
7	910400500006		Spring Washer	4		
8	910400100006		Flat Washer	4		
9	921500100267		Wire	1		
10	921100100145		Camera	1		
11	921300200001		Cable Clamp	1		
12	214536010000		Mounting Plate	1		

Chapter 9: Others

01 Control Panel (214546010001)

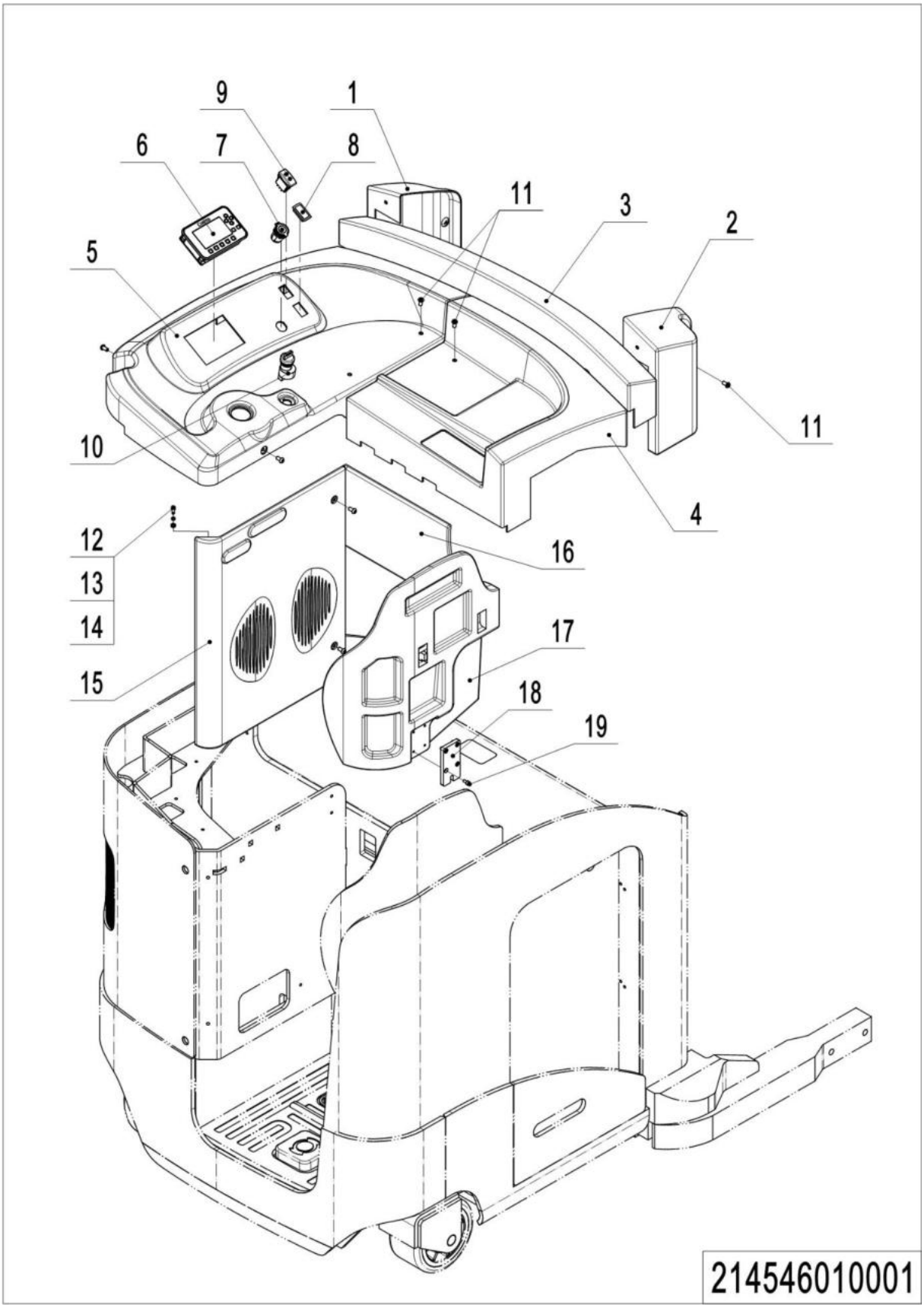

1=package supply; 2=restrict supply; 3=phasing-out supply; 4=supply as assembly; 5=check other tables.

01 Control Panel (214546010001)

No.	Item Code	Mark	Item Description	Qty.	Substitute	Note
1	214510020012		Side Cover(left)	1		
2	214510020011		Side Cover(right)	1		
3	214510020001		Cover	1		Chassis D
3	214510020002		Cover	1		Chassis E
4	214510020003		Cover	1		
5	214510020004		Cover	1		
6	921100100118		Display	1		
7	921900100022		Converter	1		
8	920200800046		Close Plate	1		
9	920200800021		Rocker Switch	1		
10	920200200042		Key Switch	1		Lead-acid
10	212734001000		Key Switch	1		Lithium
11	910200300031		Screw	8		
12	910200200036		Screw	2		
13	910400500005		Spring Washer	2		
14	910400100005		Flat Washer	2		
15	214510020014		Cushion	1		
16	214510020013		Cushion	1		
17	214510020008		Backrest	1		
18	214510020038		Press Plate	1		
19	910200200033		Screw	4		

02 Elbow Rest Assembly (214546010002)

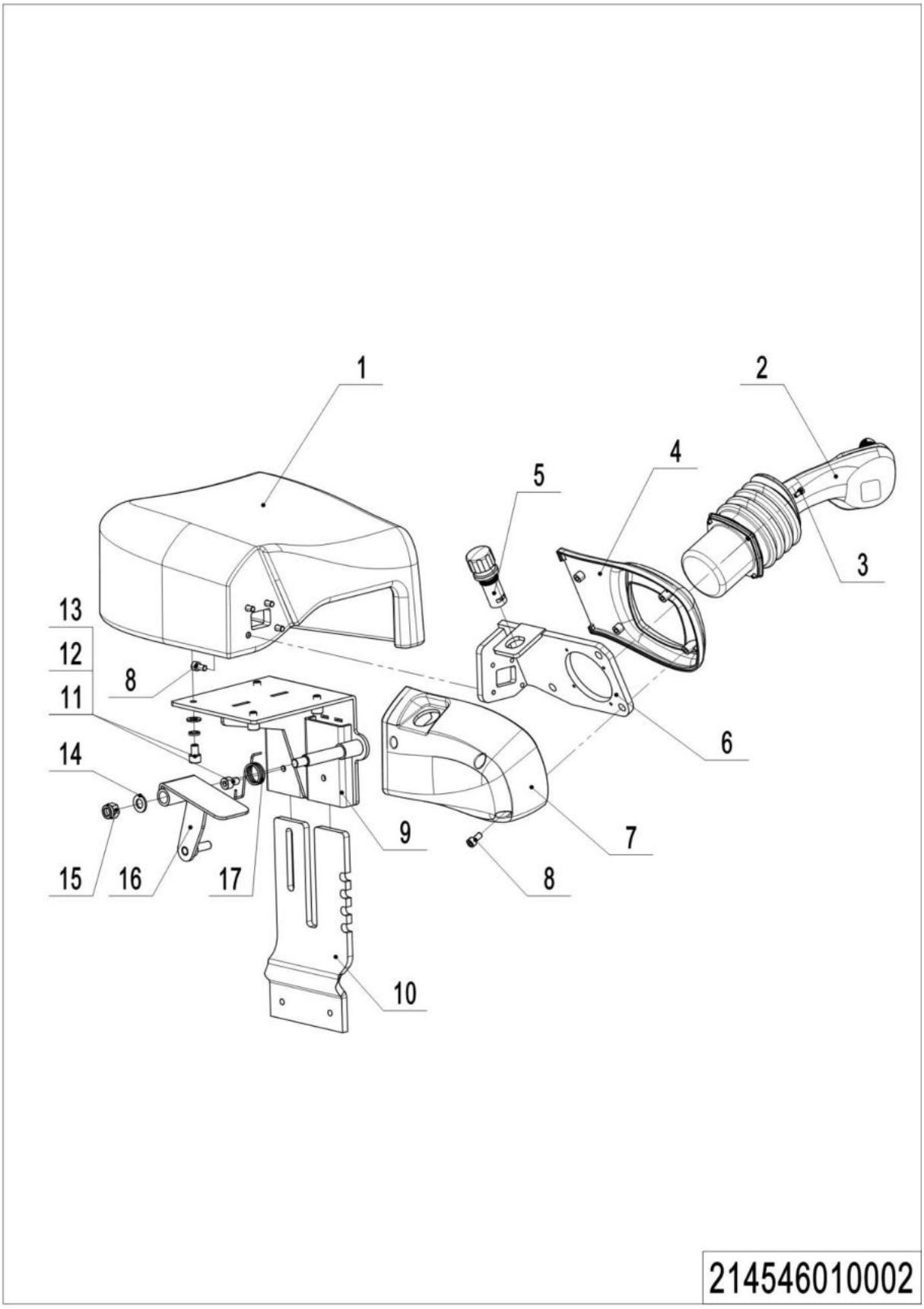

1=package supply; 2=restrict supply; 3=phasing-out supply; 4=supply as assembly; 5=check other tables.

02 Elbow Rest Assembly (214546010002)

No.	Item Code	Mark	Item Description	Qty.	Substitute	Note
1	214510020005		Cover	1		
2	214533510006		Handle	1		
3	910200200012		Screw	4		
4	214510020006		Cover	1		
5	920200100015		Emergency Button	1		
6	214510010000		Mounting Plate	1		
7	214510020007		Cover	1		
8	910200200033		Screw	8		
9	214510010001		Bracket	1		
10	214510020036		Mounting Plate	1		
11	910200200053		Screw	5		
12	910400500006		Spring Washer	4		
13	910400100006		Flat Washer	4		
14	910400100007		Flat Washer	1		
15	910300500005		Nut	1		
16	214510010002		Mounting Rack	1		
17	214510020028		Torsional Spring	1		

03 Labels and Decals-1 (215046047001)

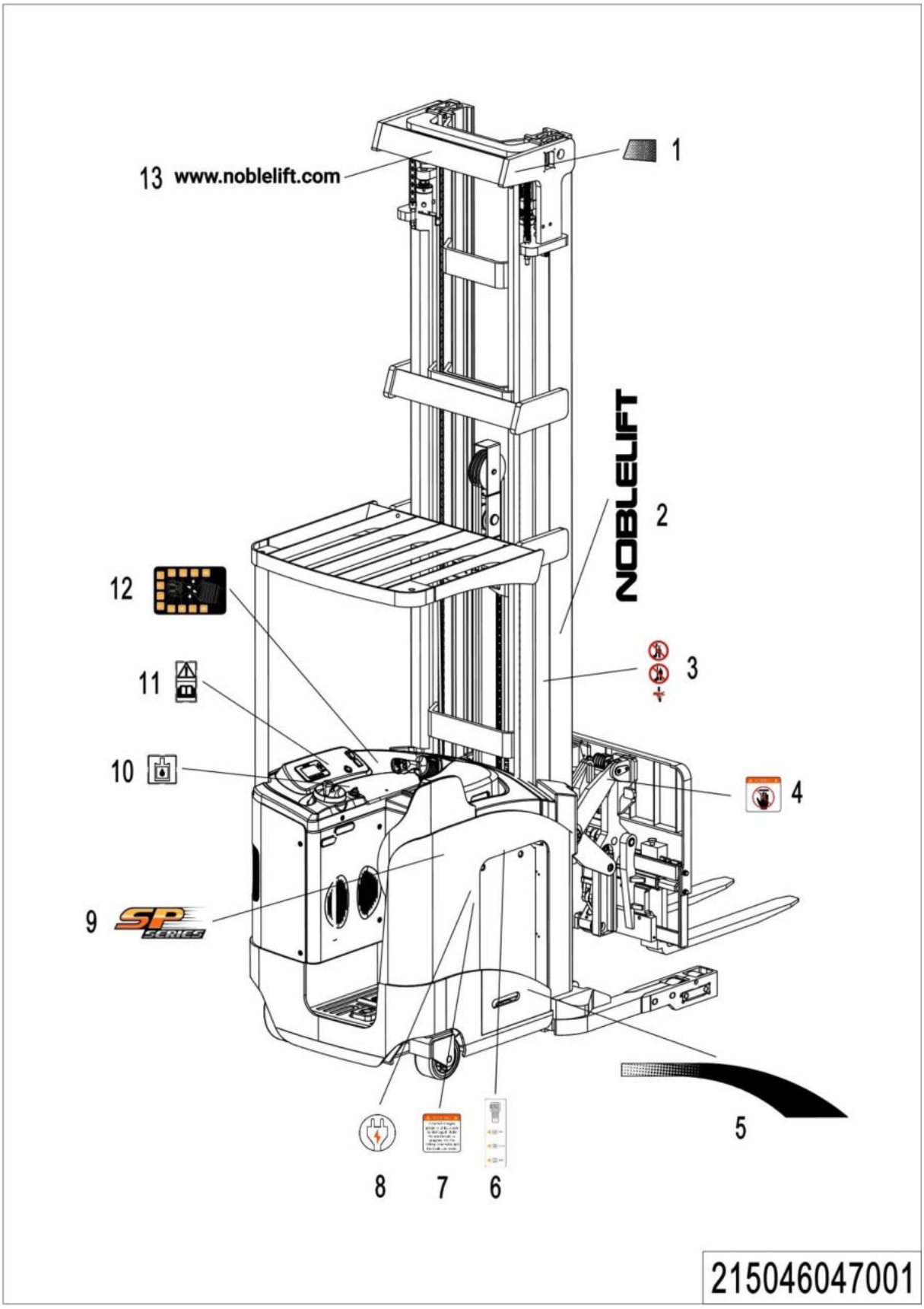

1=package supply; 2=restrict supply; 3=phasing-out supply; 4=supply as assembly; 5=check other tables.

03 Labels and Decals-1 (215046047001)

No.	Item Code	Mark	Item Description	Qty.	Substitute	Note
1	214547020001		Label	1		
2	214547020003		Label	1		
3	214547020004		Label	1		
4	214547020005		Label	1		
5	214547020006		Label	1		
6	214547020008		Label	1		
7	214547020009		Label	1		
8	214547020010		Label	1		
9	214047020001		Label	1		
10	214547020011		Label	1		
11	214547020012		Label	1		
12	214547020013		Operating procedure	1		
13	214547020014		Company website diagram	1		

04 Labels and Decals-2 (215046047002)

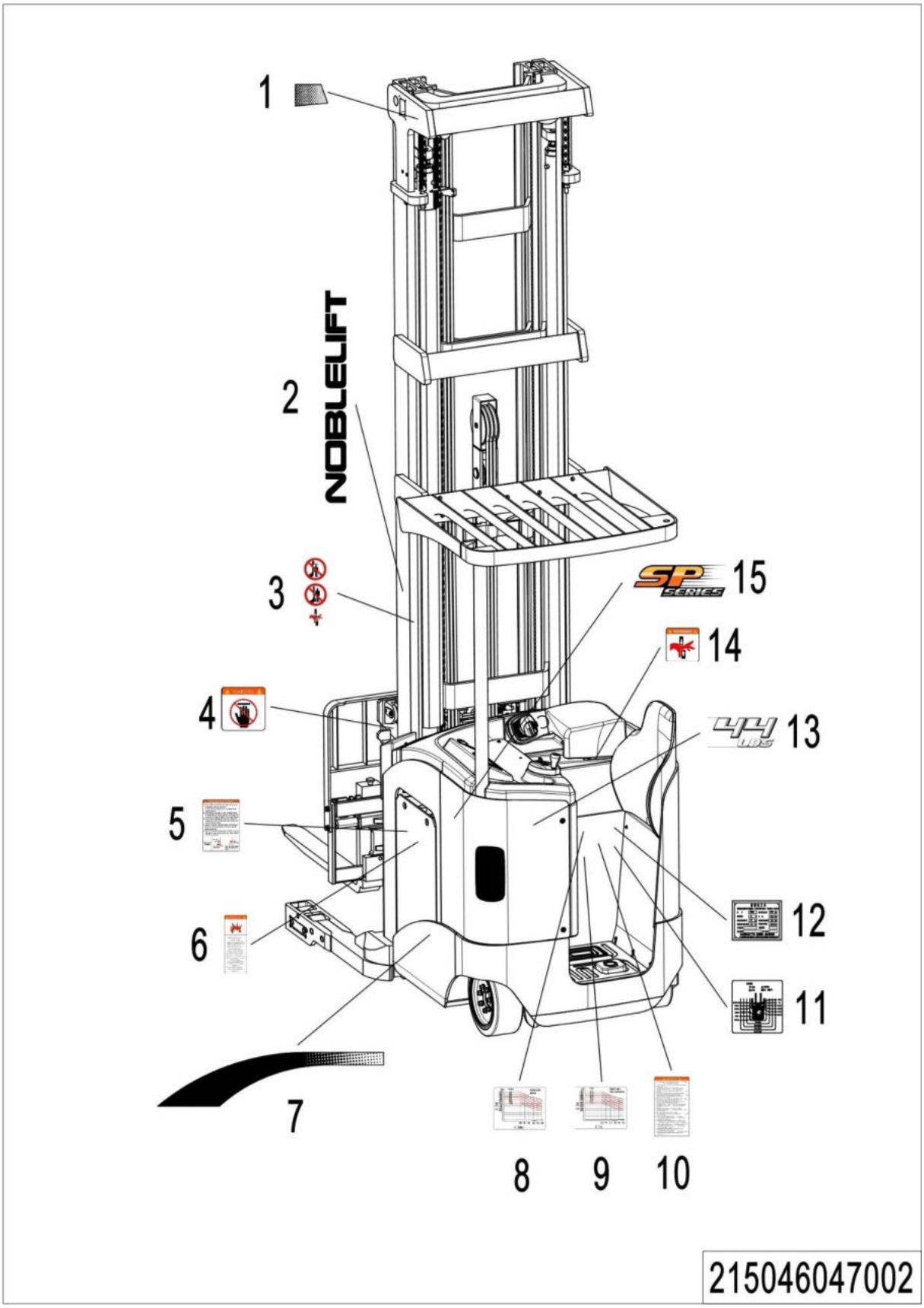

1=package supply; 2=restrict supply; 3=phasing-out supply; 4=supply as assembly; 5=check other tables.

03 Labels and Decals-2 (215046047002)

No.	Item Code	Mark	Item Description	Qty.	Substitute	Note
1	214547020002		Label	1		
2	214547020003		Label	1		
3	214547020004		Label	1		
4	214547020005		Label	1		
5	214547020015		Label	1		
6	214547020016		Label	1		
7	214547020007		Label	1		
8	215047520001		Residual Capacity Diagram	1		Chinese
9	215047520002		Residual Capacity Diagram	1		English
10	214547020017		Label	1		
11	214547020018		Label, Lubrication	1		
12	215047520000		Identification Plate	1		
13	214547020021		Label	1		
14	214547020022		Label	1		
15	214047020001		Label	1		

Appendix

01 Electrical Diagram F4A (214546003001)

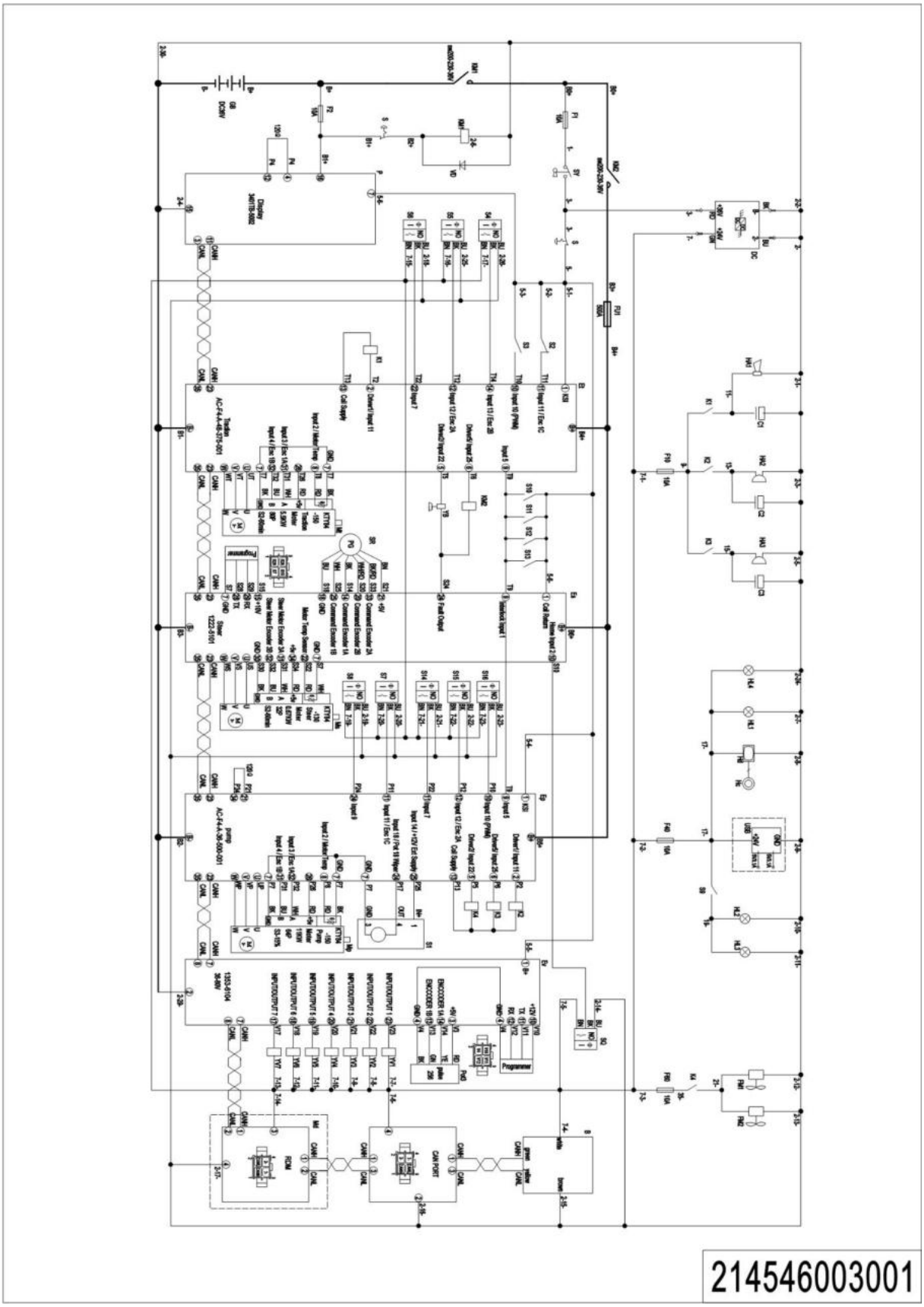

02 Hydraulic Diagram (214546044501)

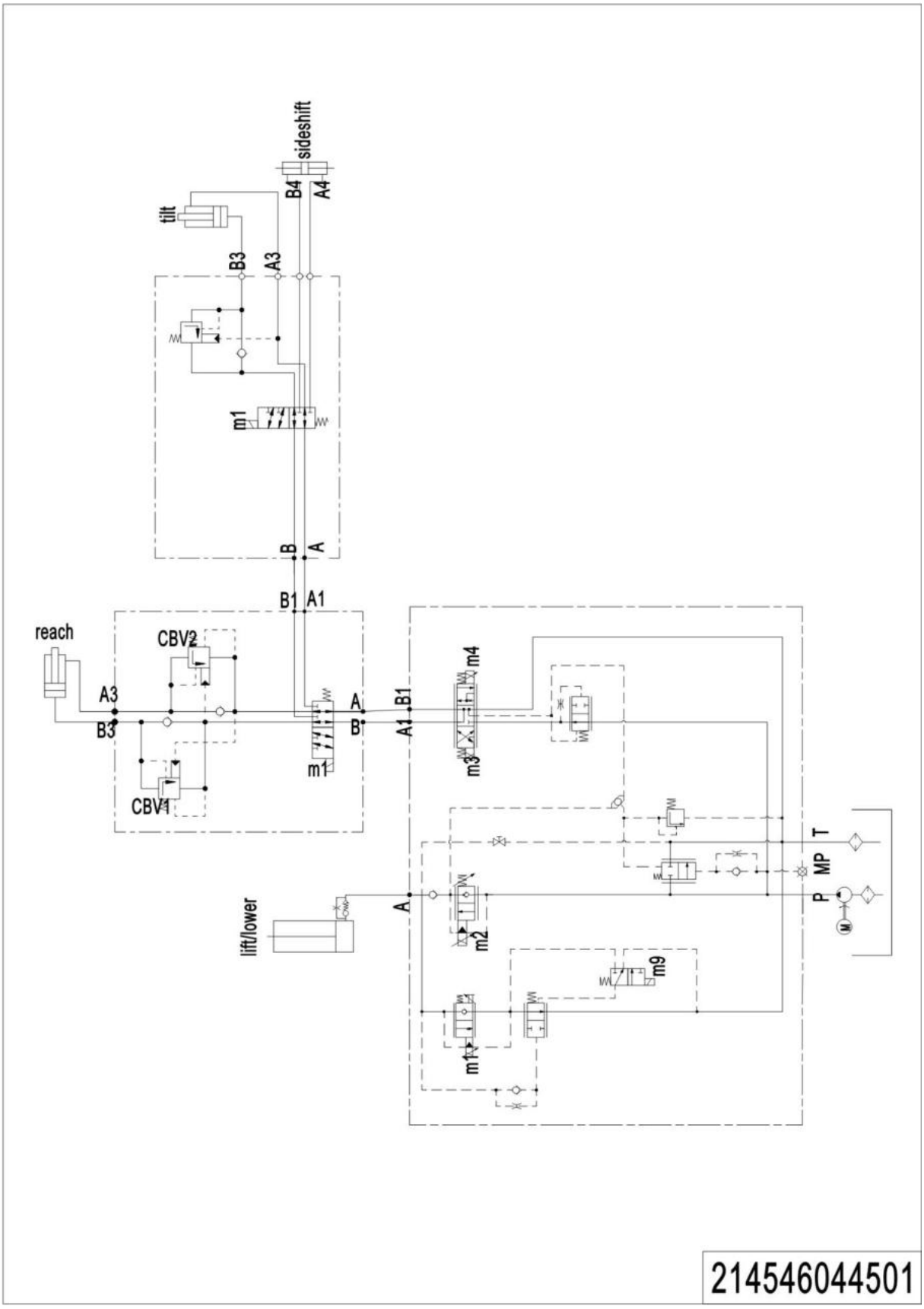

03 Consumable Parts List

No.	Item Code	Item Description	Qty.	Chapter / Section / Number
1	910700600024	Bearing	1	Chapter 1 /01 /20
2	910700600039	Bearing	1	Chapter 1 /01 /22
3	940300400007	WheelΦ343x140	1	Chapter 1 /01 /27
4	940500400002	Bearing	2	Chapter 1 /01 /47
5	910700600016	Bearing	1	Chapter 1 /01 /50
6	910700600017	Bearing	1	Chapter 1 /01 /52
7	910700200032	Bearing	2	Chapter 1 /01 /58
8	940300300056	Wheel Φ207x101	1	Chapter 1 /01 /59
9	910700800001	Bearing	2	Chapter 3 /01 /48.03
10	940500100074	Bushing	2	Chapter 3 /02 /19
11	940200300060	Compound Roller	2	Chapter 4 /01 /18
12	212198510002	Seal Kit	2	Chapter 4 /01 /34.01
13	940200500006	Sprocket Bearing	2	Chapter 4 /02 /5
14	940200300060	Compound Roller	4	Chapter 4 /02 /11
15	212198510003	Seal Kit	1	Chapter 4 /03 /12.01
16	940200300060	Compound Roller	2	Chapter 4 /03 /31
17	910700200019	Bearing	6	Chapter 4 /04 /2
18	910800100124	O-Ring	10	Chapter 4 /04 /28
19	940500400031	Oilless Bearings	2	Chapter 5 /01 /17
20	940500100034	Bushing	2	Chapter 5 /01 /26
21	940500100109	Bushing	1	Chapter 5 /01 /33
22	940500200053	Bushing	1	Chapter 5 /01 /38
23	910700900004	Bearing	4	Chapter 5 /02 /3
24	940500400020	Oilless Bearings	2	Chapter 5 /02 /18
25	940200100045	Main Roller	2	Chapter 5 /02 /22
26	940200300055	Compound Roller	2	Chapter 5 /02 /23
27	940500400018	Oilless Bearings	2	Chapter 5 /02 /27
28	940200300060	Compound Roller	6	Chapter 5 /03 /29
29	910700200004	Bearing	1	Chapter 6 /01 /14
30	940300300057	Wheel Φ127x74	2	Chapter 6 /02 /7
31	910700200032	Bearing	4	Chapter 6 /02 /8

1=package supply; 2=restrict supply; 3=phasing-out supply; 4=supply as assembly; 5=check other tables.

32	214517020014	Sleeve	1	Chapter 6 /02 /17
33	920100100014	Fuse	1	Chapter 7 /01 /4
34	920100200002	Fuse	5	Chapter 7 /01 /6

1=package supply; 2=restrict supply; 3=phasing-out supply; 4=supply as assembly; 5=check other tables.