Print Number：　　Print Date：

NOBLELIFT

Reach Truck RT20ProH

PARTS MANUAL

213346020101

Version：V06

Truck Identification Number From：

Parts Manual RT20ProH-PM06EN

Please order spare parts from authorized dealers of Noblelift Intelligent Equipment Co., LTD.

In order to avoid wrong delivery, all the orders for spare parts should specify the following items:

- Truck model, identification number and manufacture year.
- Orders for spare parts of mast, hydraulic transmission unit, steering axle, motor, etc. shall indicate the manufacture number of these parts.
- Codes for Noblelift spare parts are shown in the table of parts manual. Please also pay attention to the description of supply status, order quantity, etc. (check the number listed in "Mark" column of the parts manual).

"Mark" Column:

The unmarked indicates the parts are in short supply cycle.

Number 1: supply as package. Indicating these that parts are small parts and seal parts, which are supplied in package unit and in short supply cycle.

Number 2: supply with constraints. Indicating that these spare parts are not in stock and will be prepared for production after receiving the order from customers, which are in long supply cycle.

Number 3: phasing-out supply. Indicating that these parts will be replaced by new parts due to technical improvements and the current stock will not be available when these parts run out. Please check the description of technical improvements notice.

Number 4: supply as assembly. Indicating that these parts are assembly parts defined by manufacture process, which cannot be supplied as a single part.

Number 5: check other tables.

This parts manual is the property of Noblelift and can be shared under the confidential agreement only, Noblelift has the right to claim for compensation of any unauthorized use. Copy without permission is not allowed. Figures in the manual are not limited by the original design. Noblelift Intelligent Equipment Co., LTD reserves the right to improve the products for continuous technology progress.

Table of Contents

Chapter 1: Drive System 5
01 Drive Unit (213346013501) 5
02Drive Unit (EN1175-2020)(213346013551) 7
02Drive Unit (EN1175-2020)(213346013551) Continuation 9
03 Lift Unit (213346032501) 11
Chapter 2: Hydraulic System 13
01 Hydraulic Assembly (213346025501) 13
02 Reach Cylinder (213346020001) 15
03 Oil Tank (213346019001) 17
04 Tilt Cylinder (212146020501) 19
Chapter 3: Truck Frame 21
01 Chassis (213346021501) 21
01 Chassis (213346021501) Continuation 23
01 Chassis (213346021501) Continuation 2 25
02 Handle Assembly (213346021502) 27
03 Overhead Guard (213346022001) 29
04 Platform (213346018001) 31
05 Seat (213346037501) 33
Chapter 4: Mast 35
01 Outer Mast (213346044501) 35
01 Outer Mast (213346044501) Continuation 37
02 Middle Mast (213346044502) 39
03 Inner Mast (213346044503) 41
03 Inner Mast (213346044503) Continuation 43
04 Reach Frame (213346044504) 45
04 Reach Frame (213346044504) Continuation 47
05 Fork Carriage (213346044505) 49
06 Hydraulic Unit (Mast) (213346044506) 51
06 Hydraulic Unit (Mast) (213346044506) Continuation 53
06 Hydraulic Unit (Mast) (213346044506) Continuation 2 55
Chapter 5: Steering System, Braking System, Wheels 57
01 Steering Wheel (213346031501) 57
01 Steering Wheel (213346031501) Continuation 59
02 Brake Pedal (213346011501) 61
03 Brake Unit (213346011502) 63
04 Load Wheel (213346017001) 65
Chapter 6: Electrical Parts 67
01 Wire Harness (213346033001) 67
02 Controller 1232SE (213346033002) 69
03 Controller F4A (213346033004) 71
04 Charger (213346036501) 73
Chapter 7: Special Parts 75

01 Battery Holder (213346012501) 75
02 Monitor (213346036001) 77
03 Monitor(Wired power) (213346036002) 79
04Height Preselection System (212146066501) 81
Chapter 8: Others 83
01 Control Panel (213346010001) 83
02 Integrated Control Console (213346010002) 85
03 Adjustable Console Support (213346010003) 87
04 Labels and Decals (213346047001) 89
Appendix 91
01 Electrical Circuit Diagram 1232SE 91
02 Electrical Circuit Diagram F4A 92
03 Hydraulic Circuit Diagram 94
04 Consumable Parts List 95

Chapter 1: Drive System

01 Drive Unit (213346013501)

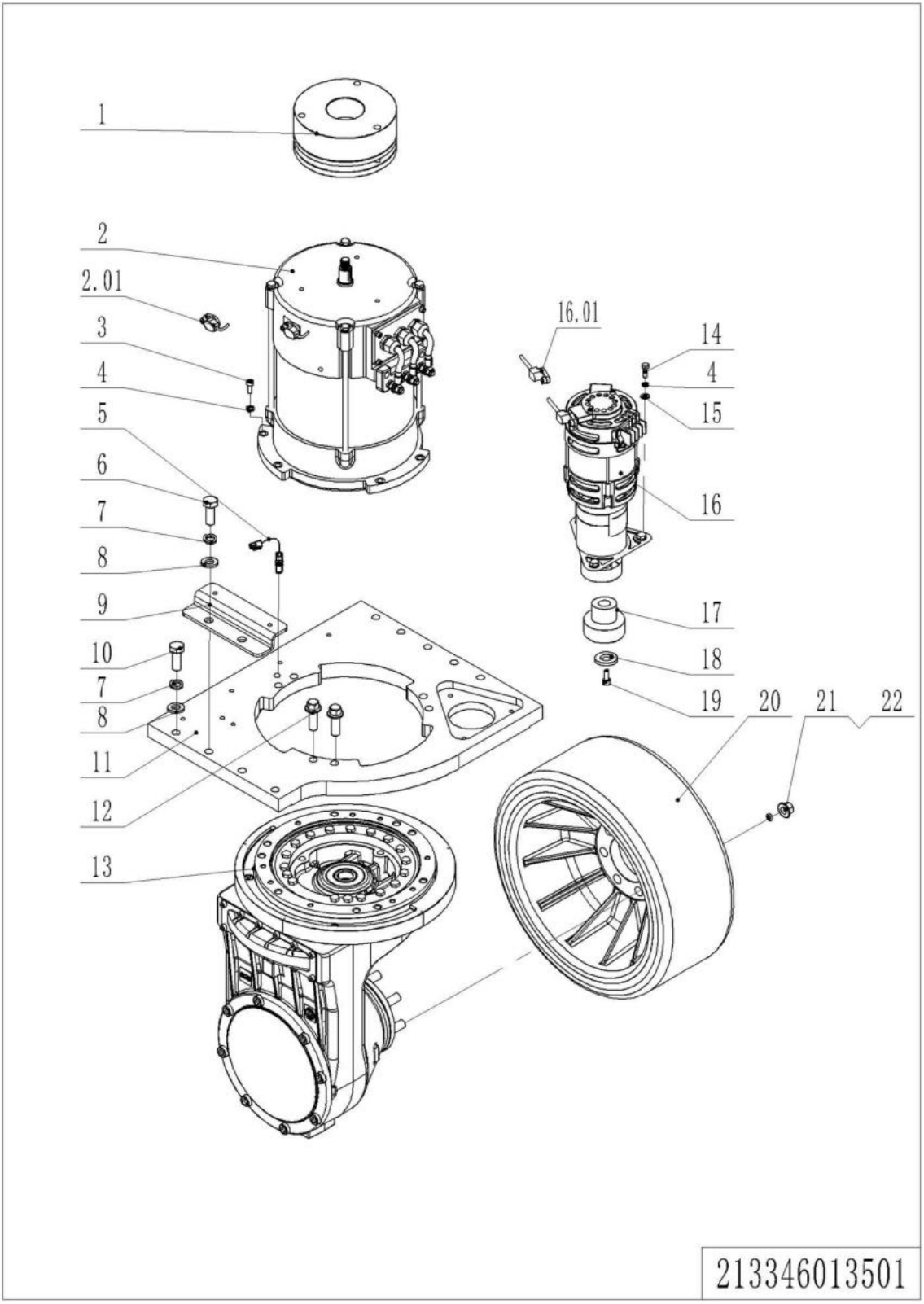

01 Drive Unit (213346013501)

No.	Item Code	Mark	Item Description	Qty.	Substitute	Note
1	940700100003		Brake	1		
2	920900100143		Motor	1		
2.01	921800200037		Encoder	1		
3	910200200061		Screw	6		
4	910400500006		Spring Washer	10		
5	212133510010		Proximity Switch	1		
6	910100300096		Bolt	2		
7	910400500008		Spring Washer	8		
8	910400100008		Flat Washer	8		
9	213321520042		Fixing Plate	1		
10	910100300095		Bolt	7		
11	213321520022		Plate	1		
12	910100800003		Screw	6		
13	941000100008		Gearbox	1		
14	910400100006		Flat Washer	3		
15	910100300023		Bolt	3		
16	940900800001		Steering Unit	1		
16.01	921800200012		Encoder	1		
17	213313520000		Gear	1		
18	213313520001		Washer	1		
19	910200200058		Screw	1		
20	940300400043		WheelΦ400x160	1		
21	940998520072		Nut	7		
22	940998520073		Spring Washer	7		

1= Supply as package. 2= Supply with constraints. 3= Phasing-out supply. 4= Supply as assembly. 5= Check other tables.

02Drive Unit (EN1175-2020)(213346013551)

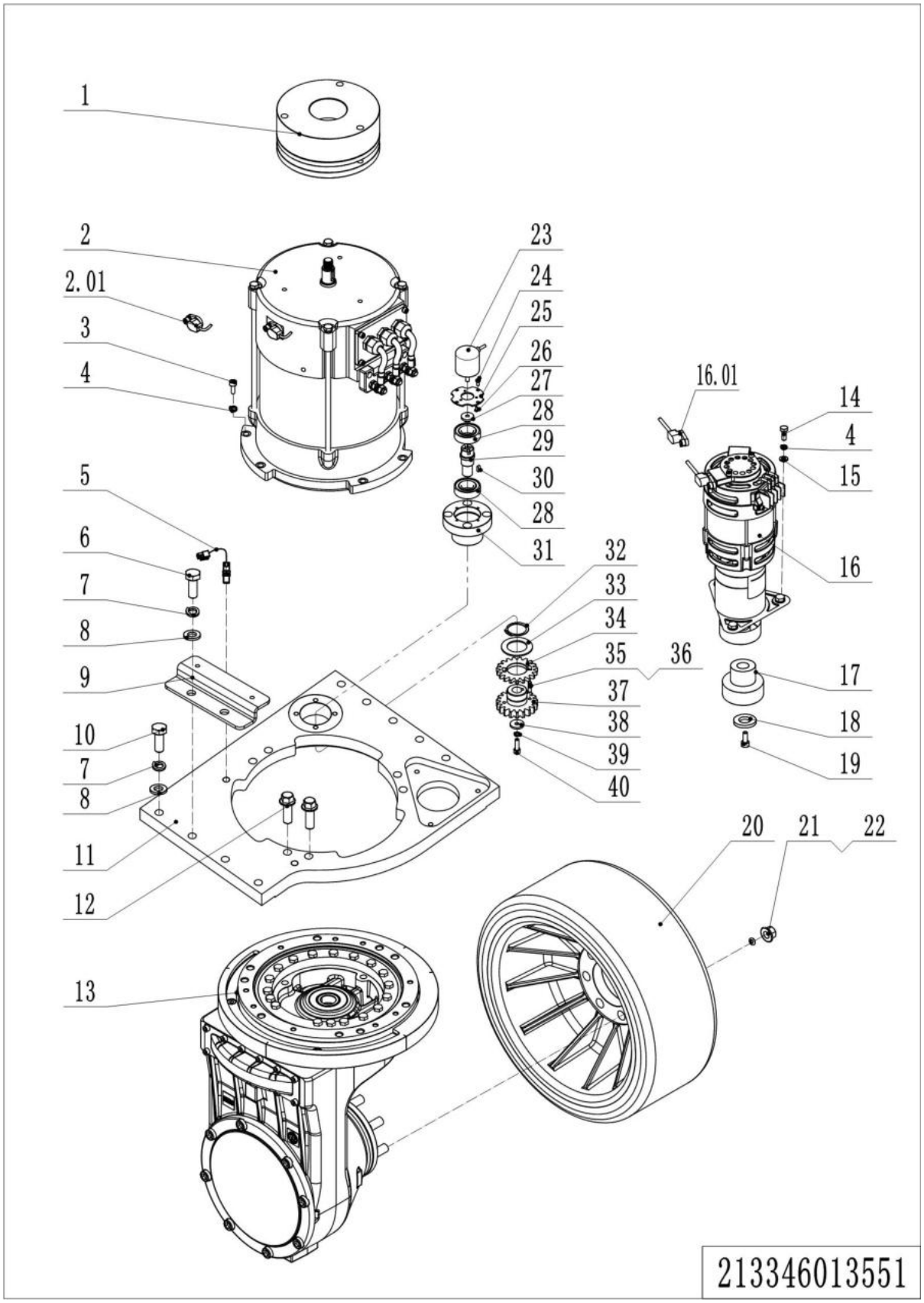

1= Supply as package. 2= Supply with constraints. 3= Phasing-out supply. 4= Supply as assembly. 5= Check other tables.

02Drive Unit(EN1175-2020)(213346013551)

No.	Item Code	Mark	Item Description	Qty.	Substitute	Note
1	940700100003		Brake	1		
2	920900100143		Motor	1		
2.01	921800200037		Encoder	1		
3	910200200061		Screw	6		
4	910400500006		Spring Washer	10		
5	212133510010		Proximity Switch	1		
6	910100300096		Bolt	2		
7	910400500008		Spring Washer	8		
8	910400100008		Flat Washer	8		
9	213321520042		Fixing Plate	1		
10	910100300095		Bolt	7		
11	213321520022		Plate	1		
12	910100800003		Bolt	6		
13	941000100008		Gearbox	1		
14	910400100006		Flat Washer	3		
15	910100300023		Bolt	3		
16	940900800001		Steering Unit	1		
16.01	921800200012		Encoder	1		
17	213313520000		Gear	1		
18	213313520001		Washer	1		
19	910200200058		Screw	1		
20	940300400043		WheelΦ400x160	1		
21	940998520072		Nut	7		
22	940998520073		Spring Washer	7		
23	921800200029		Encoder	1		
24	910200200013		Screw	4		
25	212113520001		Mounting Plate	1		
26	910200200001		Bolt	3		
27	505931520002		Link Block	1		

1= Supply as package. 2= Supply with constraints. 3= Phasing-out supply. 4= Supply as assembly. 5= Check other tables.

02Drive Unit (EN1175-2020)(213346013551) Continuation

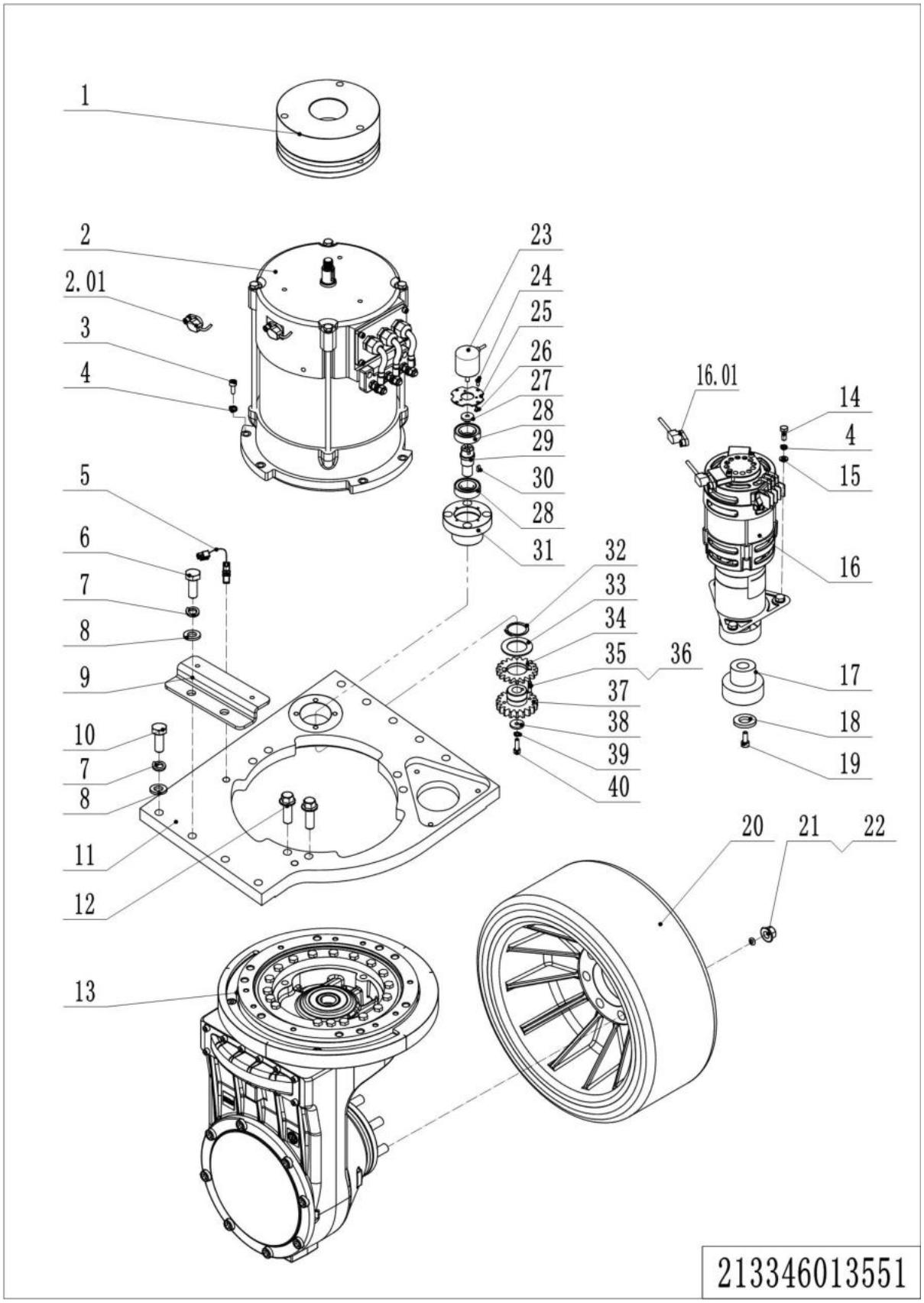

02Drive Unit(EN1175-2020)(213346013551) Continuation

No.	Item Code	Mark	Item Description	Qty.	Substitute	Note
28	910700200004		Bearing	2		
29	212113520000		Axle	1		
30	910600800004		Flat Key	1		
31	212113520002		Bracket	1		
32	910401300017		Circlip	1		
33	212113520005		Press Plate	1		
34	213313520006		Gear	1		
35	910600100045		Cylindrical Pin	1		
36	212113520006		Spring	1		
37	213313520005		Gear	1		
38	212113520004		Press Plate	1		
39	910400500005		Spring Washer	1		
40	910200200036		Screw	1		

03 Lift Unit (213346032501)

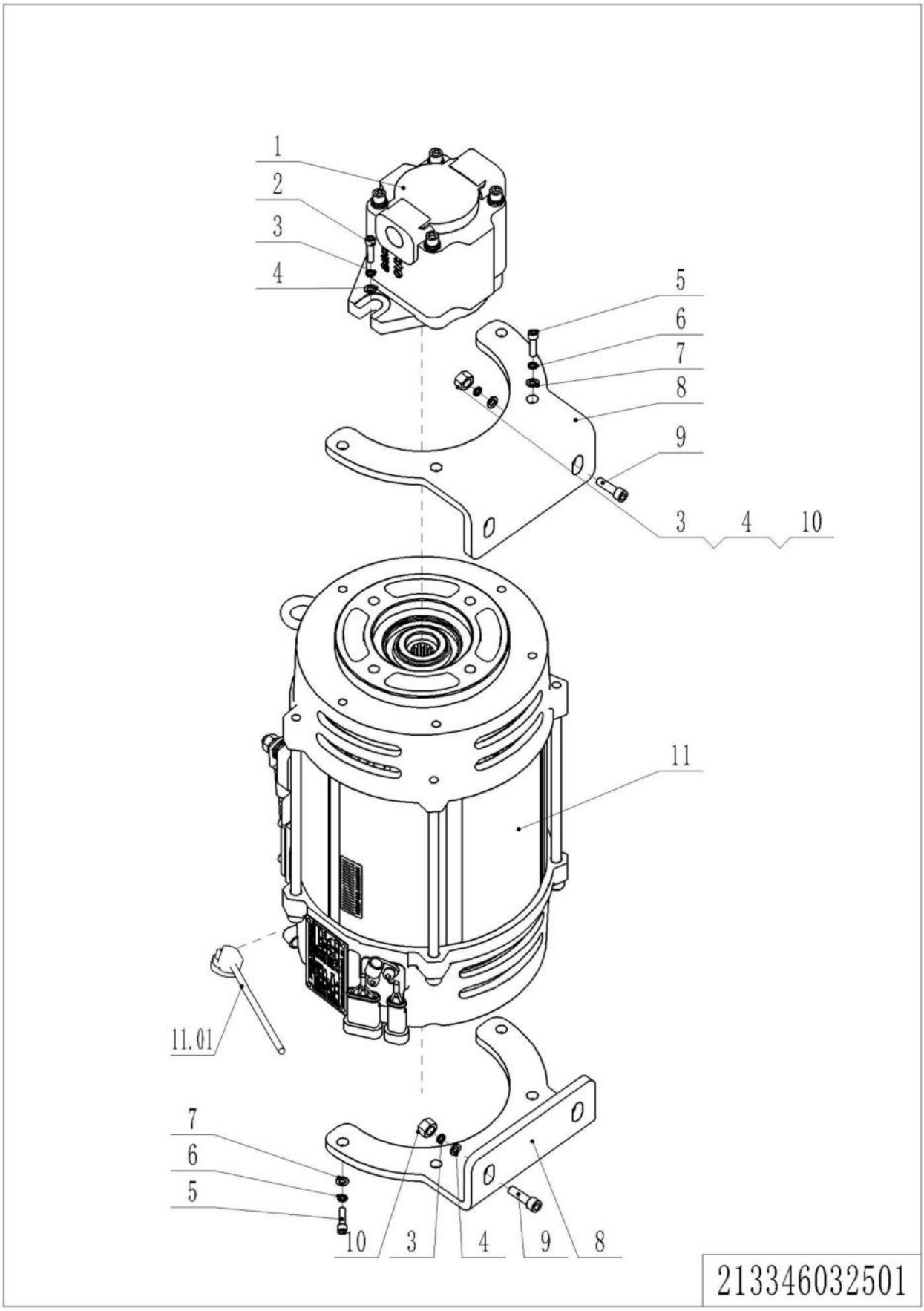

1= Supply as package. 2= Supply with constraints. 3= Phasing-out supply. 4= Supply as assembly. 5= Check other tables.

03 Lift Unit (213346032501)

No.	Item Code	Mark	Item Description	Qty.	Substitute	Note
1	950800200008		Gear Pump	1		
2	910200200077		Screw	2		
3	910400500007		Spring Washer	6		
4	910400100007		Flat Washer	6		
5	910200200057		Screw	8		
6	910400500006		Spring Washer	8		
7	910400100006		Flat Washer	8		
8	212132520000		Mounting Plate	2		
9	910200200079		Screw	4		
10	910300100007		Nut	4		
11	920900100027		Motor	1		KDS
11	920900100126		Motor	1		
11.01	921800200013		Encoder	1		KDS
11.01	921800200038		Encoder	1		

Chapter 2: Hydraulic System

01 Hydraulic Assembly (213346025501)

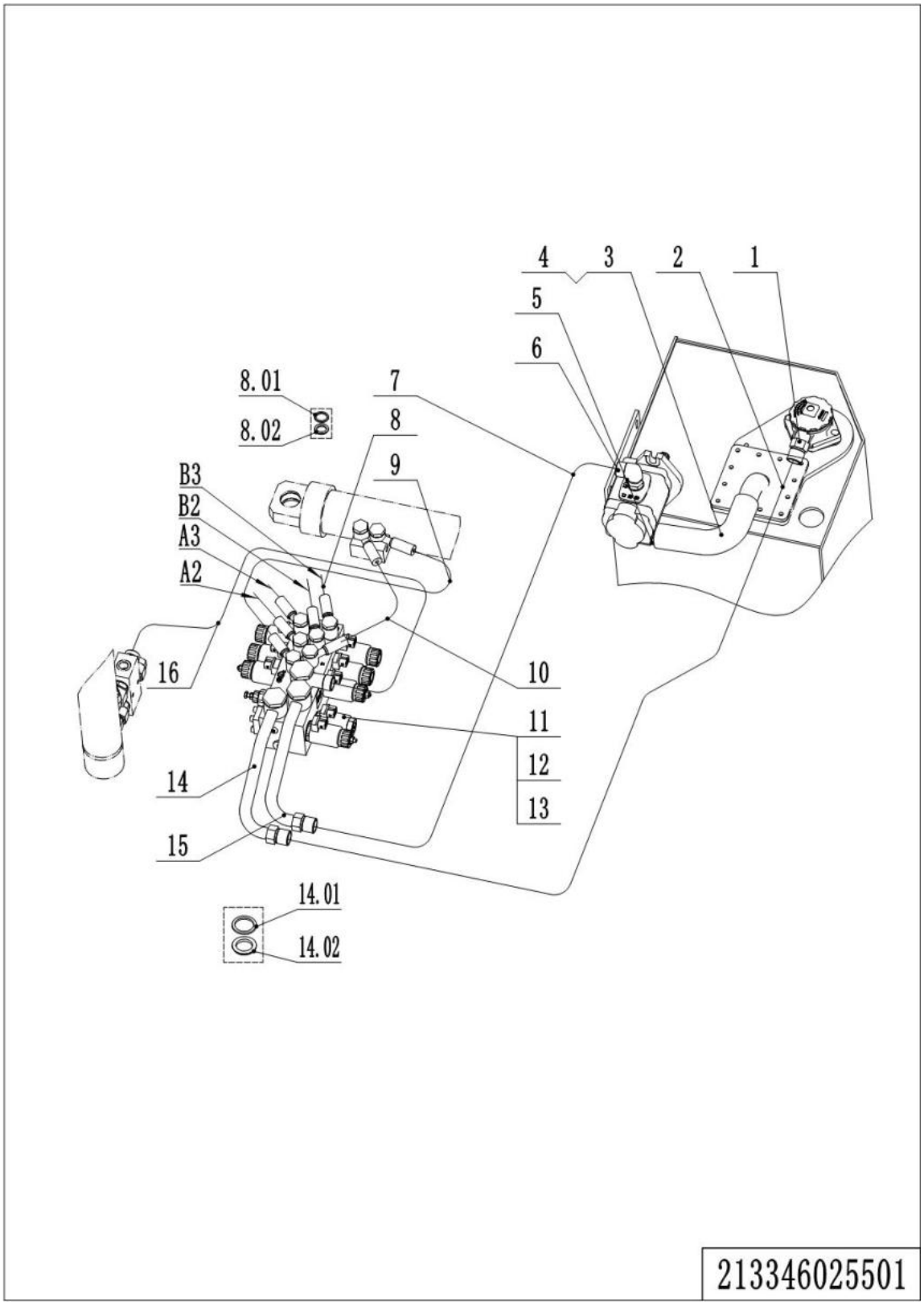

1= Supply as package. 2= Supply with constraints. 3= Phasing-out supply. 4= Supply as assembly. 5= Check other tables.

01 Hydraulic Assembly (213346025501)

No.	Item Code	Mark	Item Description	Qty.	Substitute	Note
1	950400300016		Joint	1		
2	212125020000		Hose	1		
3	212125020001		Oil Tube	1		
4	911000600006		Hose Clamp	2		
5	216525020008		Adapter	1		
6	950401100005		Joint	1		
7	212125020002		Hose	1		
8	213325020005		Hose	4		10000
8	213325020006		Hose	4		10500
8	213325020007		Hose	4		11000
8	213325020008		Hose	4		11500
8	213325020009		Hose	4		12000
8	213325020010		Hose	4		12500
8.01	910800900005		Washer	8		
8.02	910800900015		Washer	8		
9	213325020002		Hose	1		
10	213325020003		Hose	1		
11	950600100023		Hydraulic Valve	1		
12	910400500006		Spring Washer	9		
13	910200200055		Screw	3		
14	212125020005		Steel Tube	1		
14.01	910800900008		Washer	3		
14.02	910800900016		Washer	3		
15	212125020006		Steel Tube	1		
16	213325020004		Hose	1		

1= Supply as package. 2= Supply with constraints. 3= Phasing-out supply. 4= Supply as assembly. 5= Check other tables.

02 Reach Cylinder (213346020001)

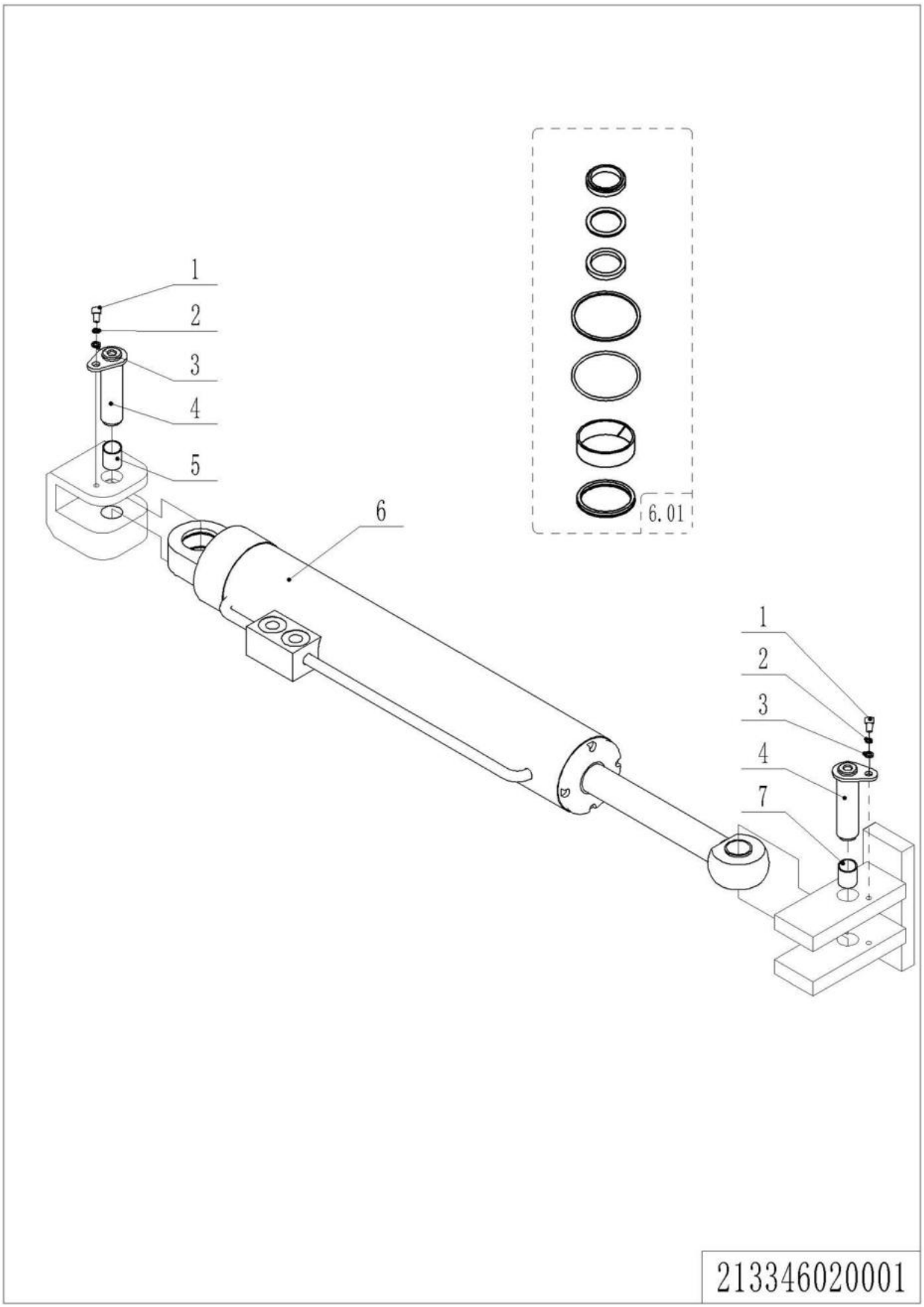

1= Supply as package. 2= Supply with constraints. 3= Phasing-out supply. 4= Supply as assembly. 5= Check other tables.

02 Reach Cylinder (213346020001)

No.	Item Code	Mark	Item Description	Qty.	Substitute	Note
1	910200200034		Screw	2		
2	910400500005		Spring Washer	2		
3	910400100005		Flat Washer	2		
4	212120010001		Pin	2		
5	212120020002		Bushing	1		
6	213320010000		Cylinder	1		
6.01	212198510004		Seal Kit	1		
7	212120020003		Bushing	1		

03 Oil Tank (213346019001)

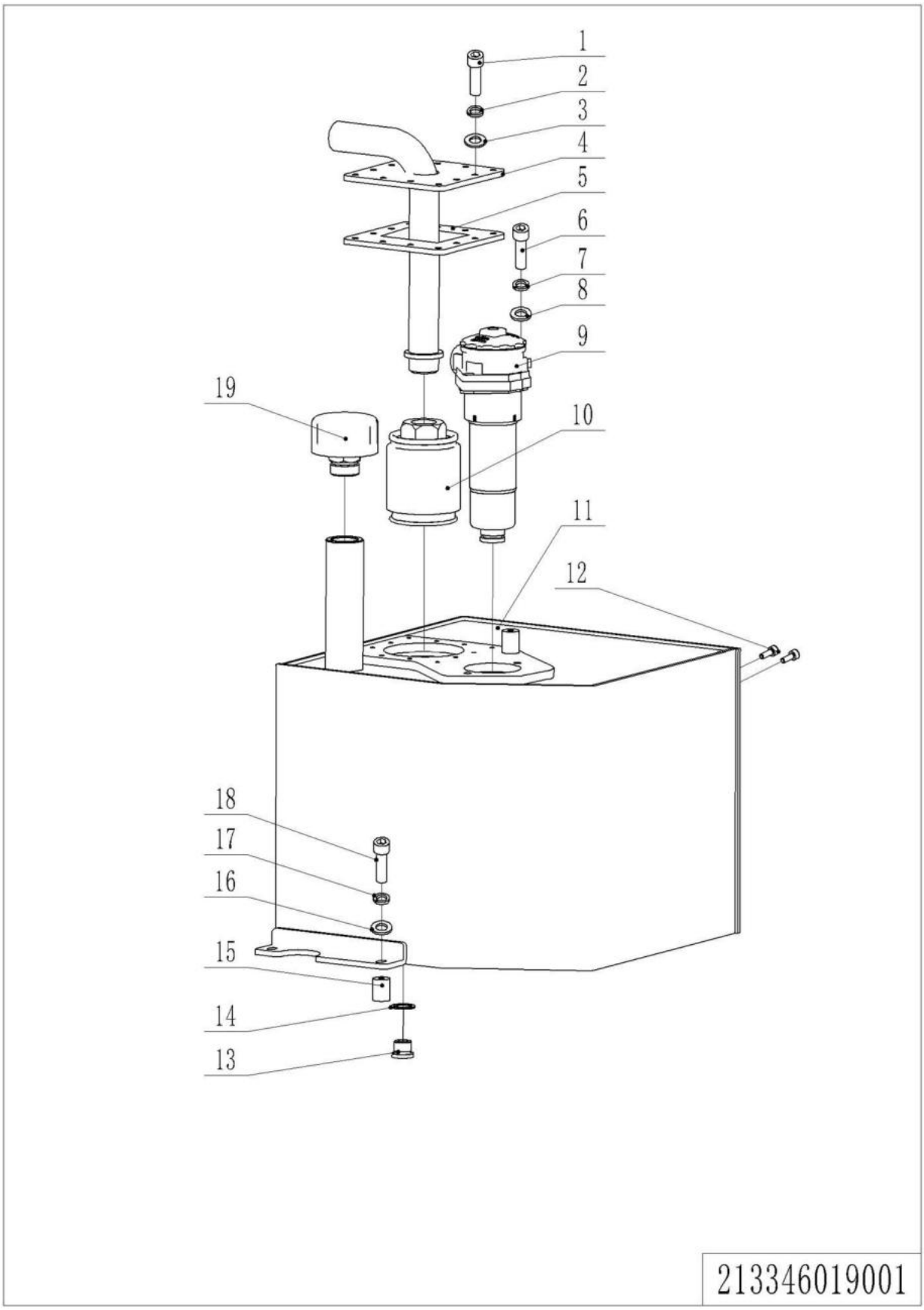

1= Supply as package. 2= Supply with constraints. 3= Phasing-out supply. 4= Supply as assembly. 5= Check other tables.

03 Oil Tank (213346019001)

No.	Item Code	Mark	Item Description	Qty.	Substitute	Note
1	910200200035		Screw	12		
2	910400500005		Spring Washer	12		
3	910400100005		Flat Washer	12		
4	213319010000		Oil Tank	1		
5	212119020000		Sealing Gasket	1		
6	910200200077		Screw	2		
7	910400500007		Spring Washer	2		
8	910400100007		Flat Washer	2		
9	951000300005		Filter	1		
10	951000400001		Filter	1		
11	213319010000		Oil Tank	1		
12	910200200074		Screw	4		
13	255019020015		Filler Plug	1		
14	910800900001		Bonded Washer	1		
15	532621520062		Crash Pad	2		
16	910400100006		Flat Washer	3		
17	910400500006		Spring Washer	3		
18	910200200058		Screw	2		
19	212119020019		Screw Plug	1		

1= Supply as package. 2= Supply with constraints. 3= Phasing-out supply. 4= Supply as assembly. 5= Check other tables.

04 Tilt Cylinder (212146020501)

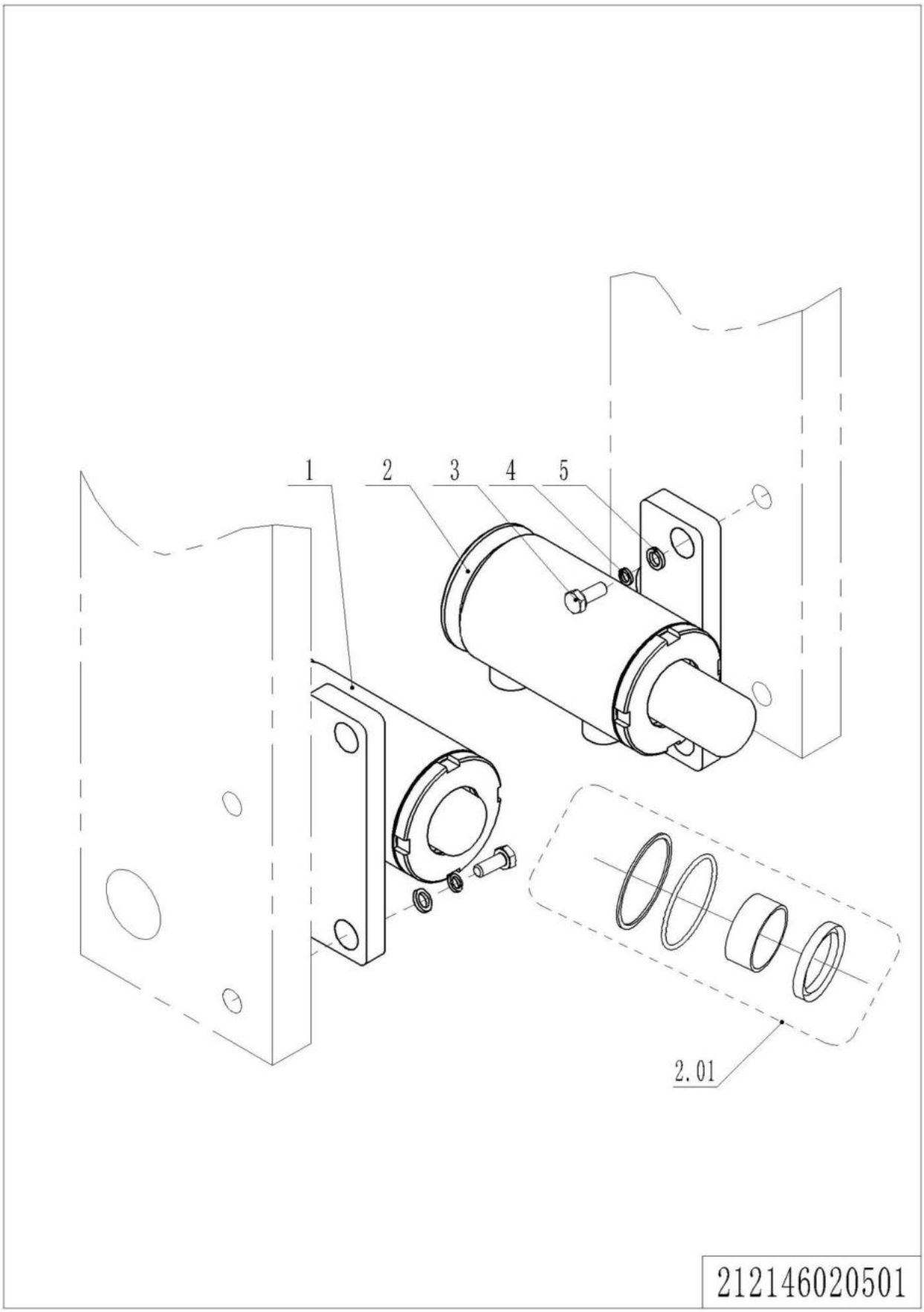

1= Supply as package. 2= Supply with constraints. 3= Phasing-out supply. 4= Supply as assembly. 5= Check other tables.

04 Tilt Cylinder (212146020501)

No.	Item Code	Mark	Item Description	Qty.	Substitute	Note
1	214120510001		Tilt Cylinder	1		
2	214120510000		Tilt Cylinder	1		
2.01	212198510000		Seal Kit 包	2		
3	910100300063		Bolt	4		
4	910400500009		Washer	4		
5	910400100009		Washer	4		

Chapter 3: Truck Frame

01 Chassis (213346021501)

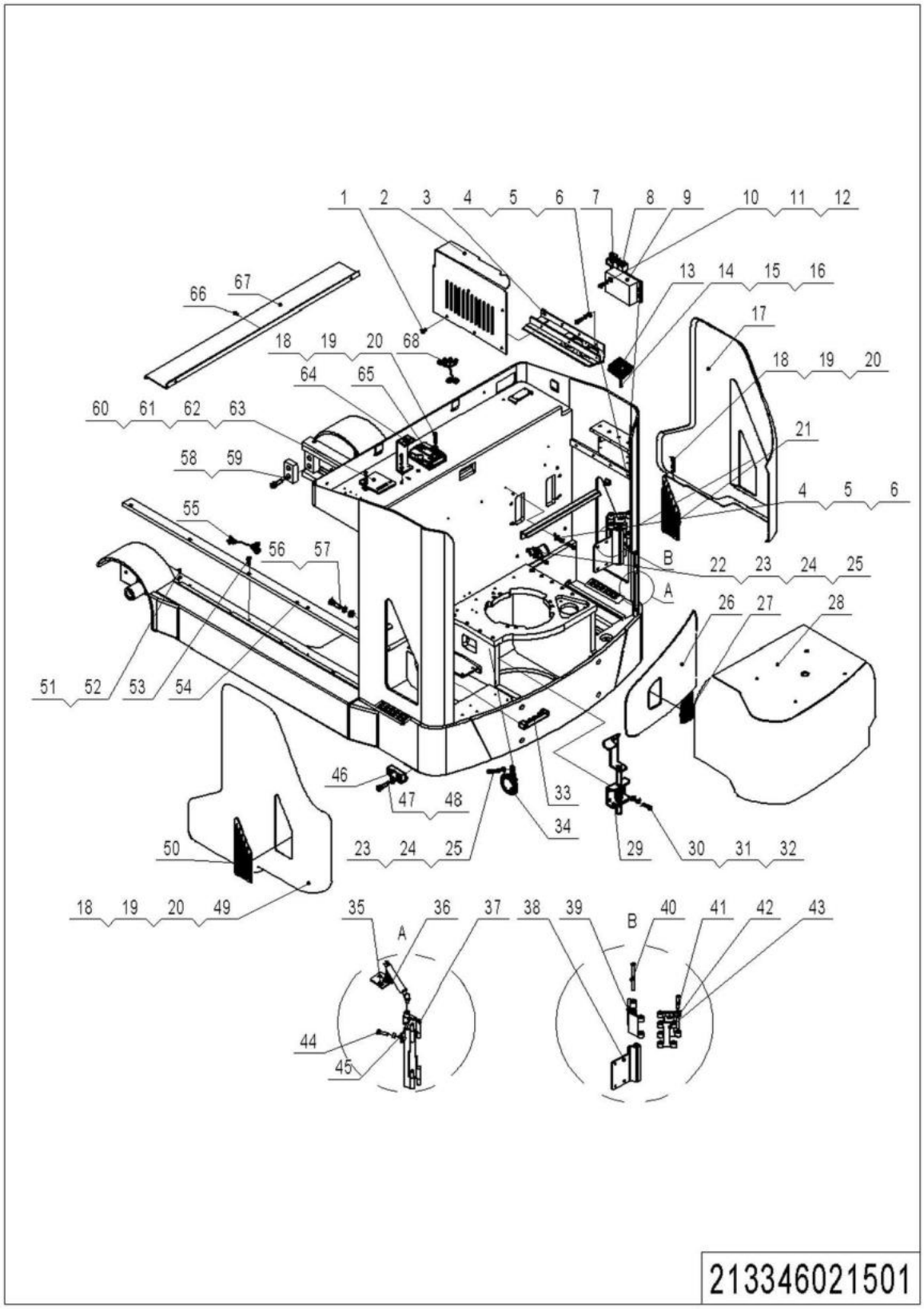

01 Chassis (213346021501)

No.	Item Code	Mark	Item Description	Qty.	Substitute	Note
1	910200300017		Screw	6		
2	212121510005		Cover	1		
3	212121510006		Fixing Base	1		
4	910400100006		Flat Washer	6		
5	910400500006		Spring Washer	6		
6	910200200055		Screw	6		
7	922000100005		Lamp	1		
8	920800100001		Relay	2		
9	921900100014		Converter	1		
10	910200500037		Screw	7		
11	910400500004		Spring Washer	7		
12	910400100004		Flat Washer	7		
13	212133510018		Fan	2		
14	910200500028		Screw	8		
15	910400500003		Spring Washer	8		
16	910400100003		Flat Washer	8		
17	212121520092		Side Plate(right)	1		
18	910200200036		Screw	10		
19	910400500005		Spring Washer	16		
20	910400100005		Flat Washer	16		
21	212121520101		Vent	1		
22	920500100002		Horn	1		
23	910200200055		Screw	8		
24	910400500006		Spring Washer	2		
25	910400100006		Flat Washer	2		
26	212121520091		Cover	1		
27	212121520102		Vent	1		
28	213321510008		Cover	1		
29	213321501001		Handle	1		
30	910200200060		Screw	4		

1= Supply as package. 2= Supply with constraints. 3= Phasing-out supply. 4= Supply as assembly. 5= Check other tables.

01 Chassis (213346021501) Continuation

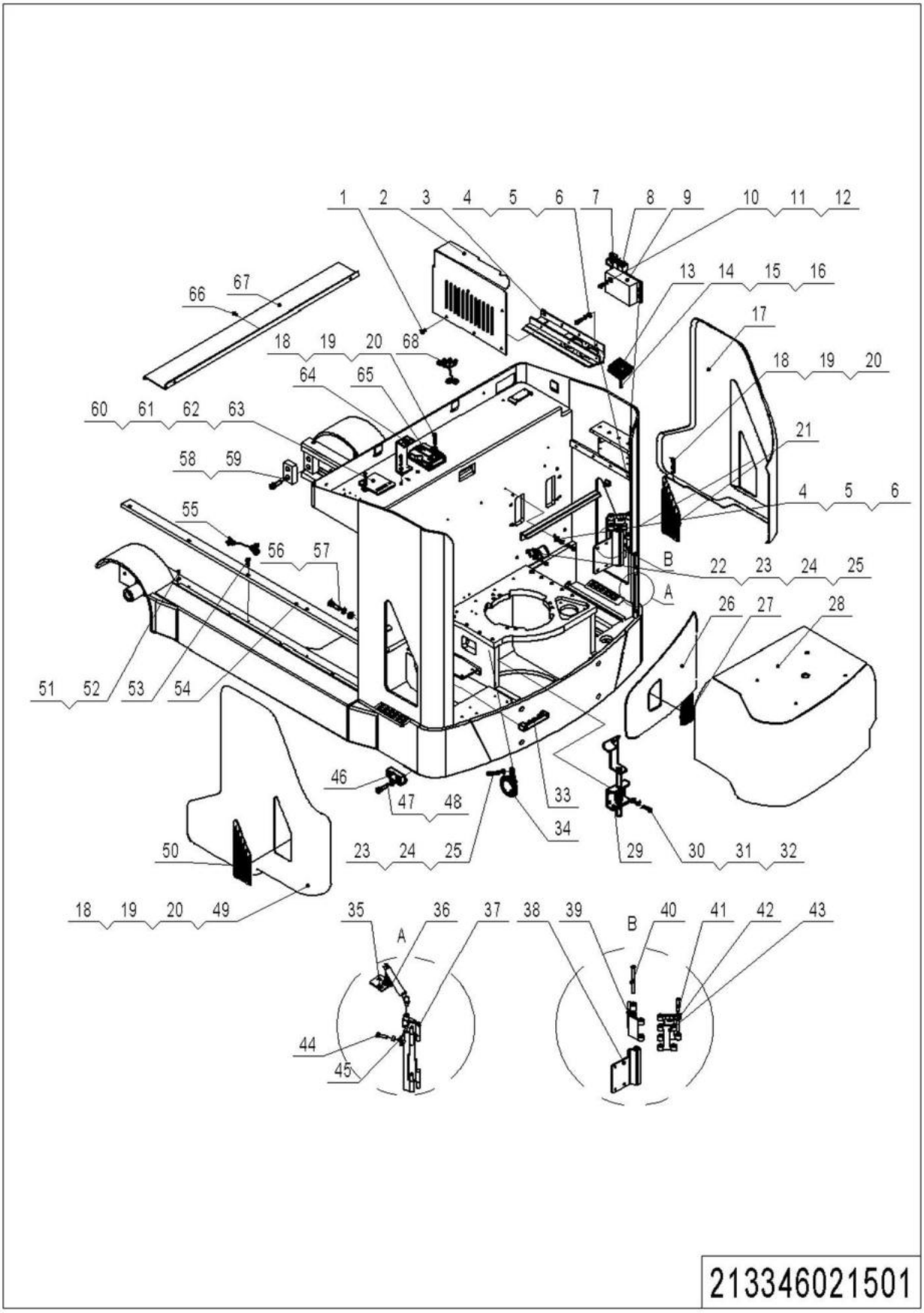

01 Chassis (213346021501) Continuation

No.	Item Code	Mark	Item Description	Qty.	Substitute	Note
31	910400500006		Spring Washer	12		
32	910400100006		Flat Washer	12		
33	212121520064		Fixing Plate	1		
34	920500100001		Horn	1		
35	212121510008		Fixing Base	1		
36	212121520048		Gas Spring	1		
37	212121510002		Hinge	1		
38	212221510002		Hinge	1		
39	212221510003		Plate	1		
40	212221520028		Pin	2		
41	212221520027		Pin	6		
42	212221510004		Rocker	1		
43	212221510005		Rocker	1		
44	910100300024		Bolt	1		
45	910300100006		Nut	1		
46	212121520068		Support Leg	2		
47	910200200099		Screw	4		
48	910400500008		Spring Washer	6		
49	212121520093		Side Plate(left)	1		
50	212121520100		Vent	1		
51	212121520075		Press Plate	8		
52	910200300011		Screw	8		
53	910200200058		Screw	8		
54	213121520040		Guide Rail	2		
55	212133010014		Wire Harness	1		
56	910400500006		Spring Washer	12		
57	910200200065		Screw	2		
58	216521520001		Crash Pad	2		
59	910200200098		Screw	4		
60	921400100115		Controller	1		1356P

1= Supply as package. 2= Supply with constraints. 3= Phasing-out supply. 4= Supply as assembly. 5= Check other tables.

01 Chassis (213346021501) Continuation 2

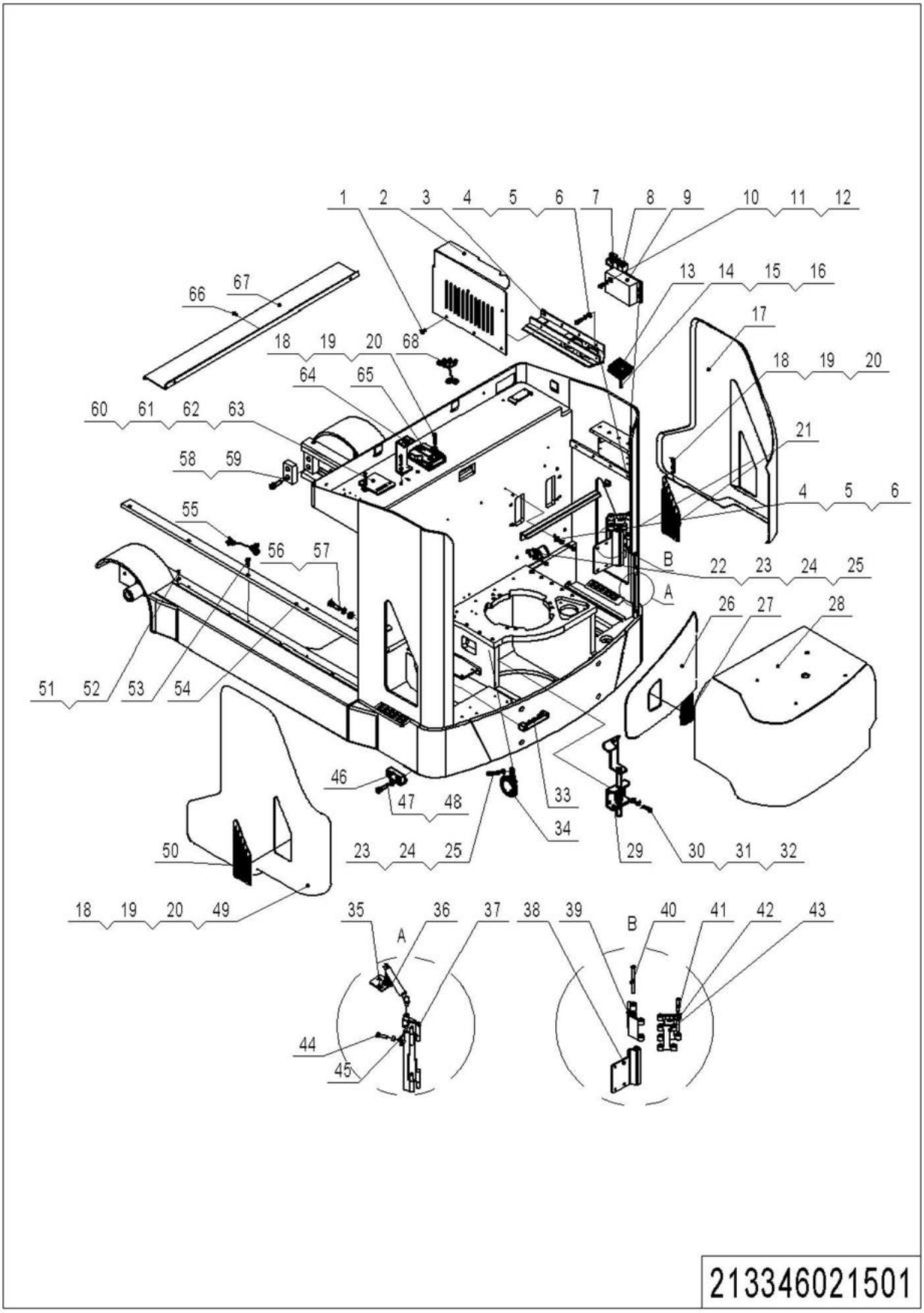

01 Chassis (213346021501) Continuation 2

No.	Item Code	Mark	Item Description	Qty.	Substitute	Note
61	910200500022		Screw	2		
62	910400500003		Spring Washer	2		
63	910400100003		Flat Washer	2		
64	212121520008		Fixing Plate	1		
65	921400100113		Controller	1		1353
65	921400100189		Controller	1		1351
66	941100100001		Screw	3		
67	213321520041		Guard Plate	1		
68	212133010016		Wire Harness	1		

02 Handle Assembly (213346021502)

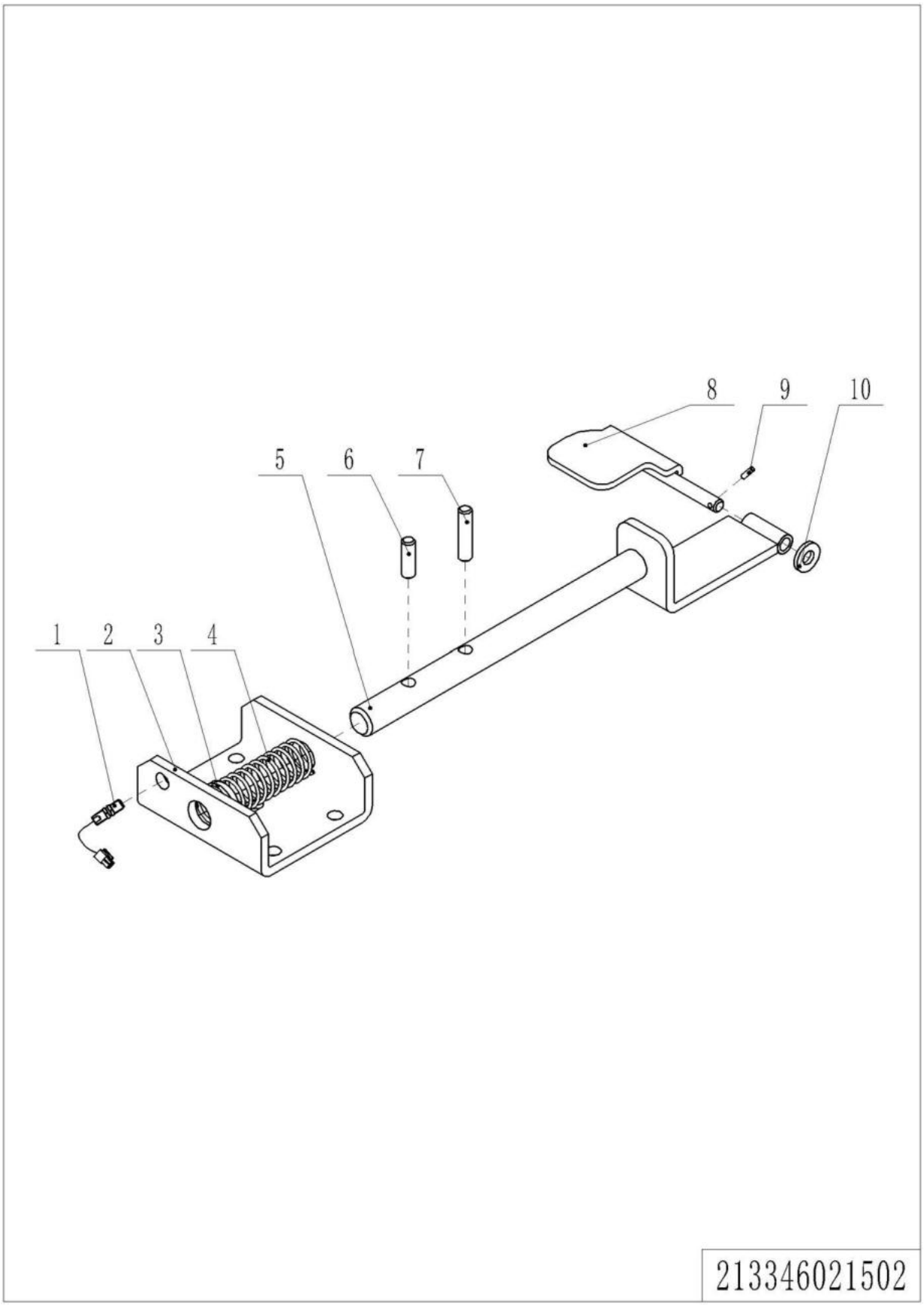

1= Supply as package. 2= Supply with constraints. 3= Phasing-out supply. 4= Supply as assembly. 5= Check other tables.

02 Handle Assembly (213346021502)

No.	Item Code	Mark	Item Description	Qty.	Substitute	Note
1	212133510007		Proximity Switch	1		
2	212121520050		Fixing Plate	1		
3	212121520052		Washer	1		
4	212121520051		Spring	1		
5	213321510004		Axle	1		
6	910600400044		Spring Pin	1		
7	910600400046		Spring Pin	1		
8	212121510003		Bolt	1		
9	910600400002		Spring Pin	1		
10	910400100006		Flat Washer	1		

03 Overhead Guard (213346022001)

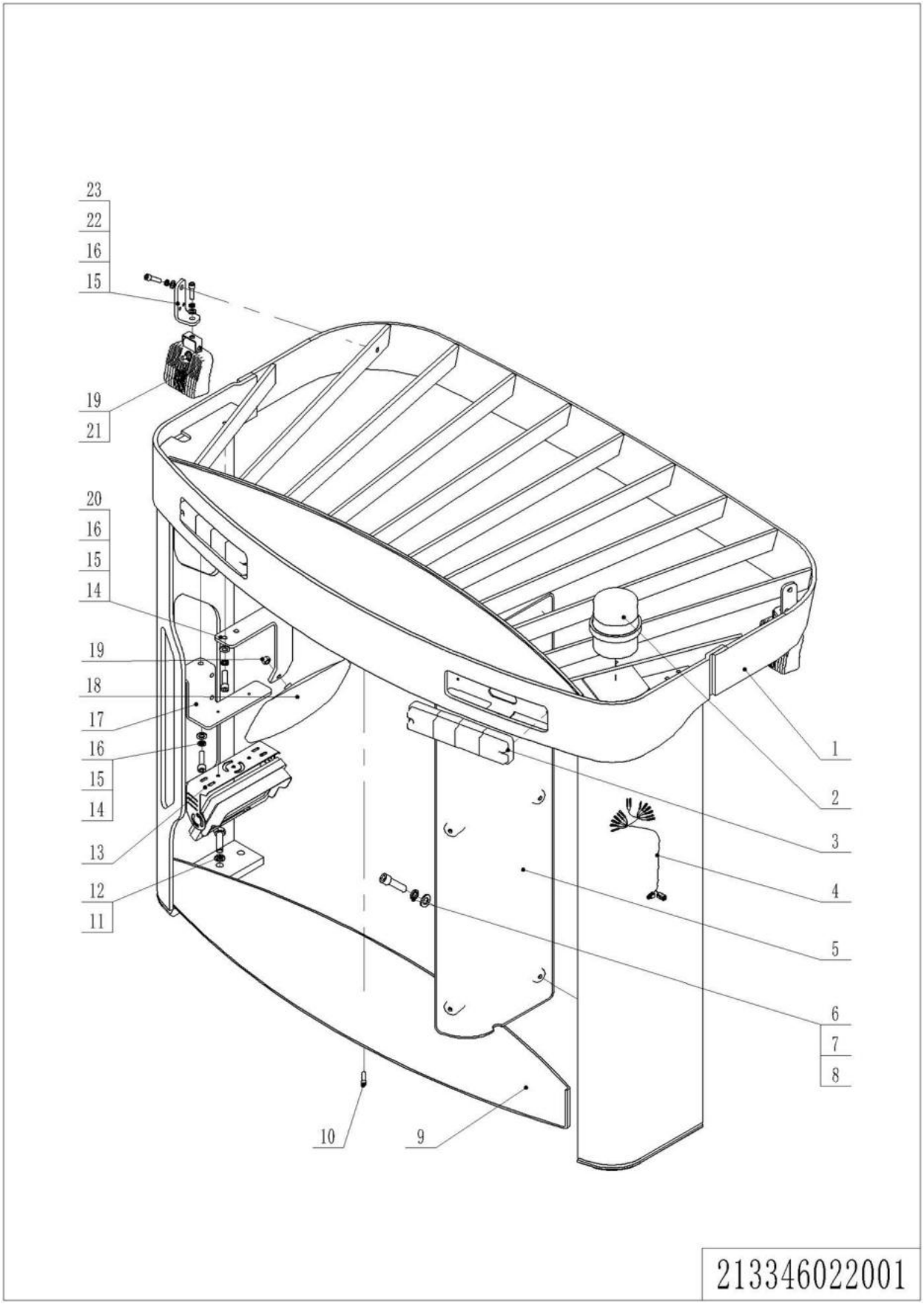

1= Supply as package. 2= Supply with constraints. 3= Phasing-out supply. 4= Supply as assembly. 5= Check other tables.

03 Overhead Guard (213346022001)

No.	Item Code	Mark	Item Description	Qty.	Substitute	Note
1	212122010000		Overhead Guard	1		
2	922000100004		Lamp	1		
3	922000100003		Lamp	2		
4	212133010013		Wire Harness	1		
5	212122020021		Cover	1		
6	910200300017		Screw	6		
7	910400500005		Spring Washer	6		
8	910400100005		Flat Washer	6		
9	212122020020		Cover	1		
10	910200300017		Screw	1		
11	910200300037		Screw	8		
12	910400500008		Spring Washer	8		
13	921100100058	5	Display	1		
14	910200200055		Screw	4		
15	910400500006		Spring Washer	8		
16	910400100006		Flat Washer	8		
17	212122020018		Bolt	1		
18	940800100001		Rearview Mirror	1		
19	910300100006		Nut	5		
20	212122020022		Mirror	1		
21	922000100016		Lamp	2		
22	910200200058		Screw	4		
23	212122020023		Mounting Plate	2		

1= Supply as package. 2= Supply with constraints. 3= Phasing-out supply. 4= Supply as assembly. 5= Check other tables.

04 Platform (213346018001)

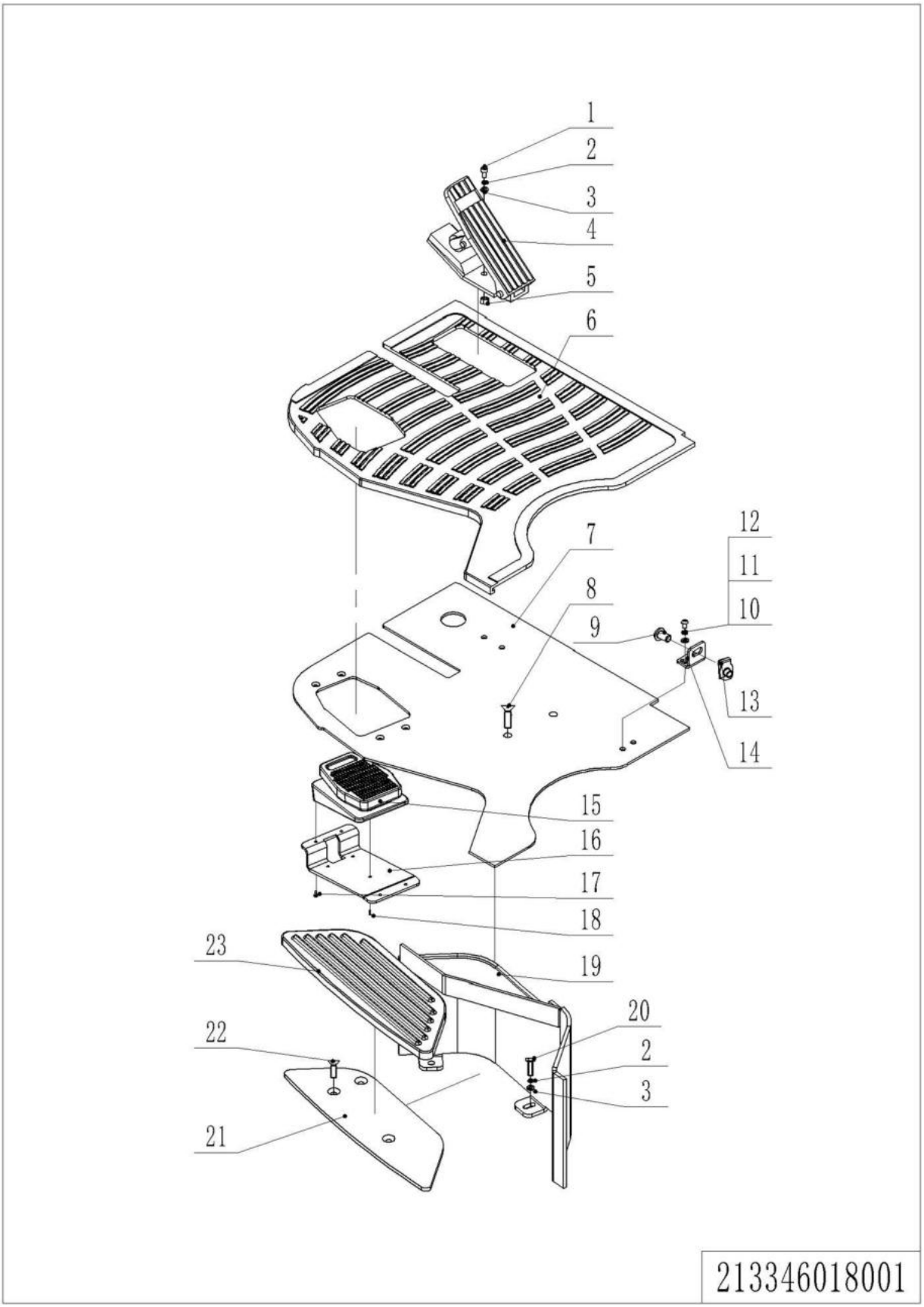

1= Supply as package. 2= Supply with constraints. 3= Phasing-out supply. 4= Supply as assembly. 5= Check other tables.

04 Platform (213346018001)

No.	Item Code	Mark	Item Description	Qty.	Substitute	Note
1	910200200057		Screw	2		
2	910400100006		Flat Washer	4		
3	910400500006		Spring Washer	4		
4	921700100005		Accelerator	1		
4	921700100028		Accelerator	1		EN1175-2020
5	910300100006		Nut	2		
6	212118020000		Mat	1		
7	213318020001		Platform	1		
8	910200400033		Screw	2		
9	941100100012		Screw,M8x20	1		
10	910200200033		Screw	2		
11	910400100005		Flat Washer	2		
12	910400500005		Spring Washer	2		
13	940400400002		Cage Nut	1		
14	213318020002		Fixing Plate	1		
15	212133510019		Foot Switch	1		
16	212118020008		Mounting Plate	1		
17	910200400009		Screw	4		
18	212198520048		Screw	3		
19	213318010000		Bracket	1		
20	910100300022		Bolt	2		
21	212118010001		Platform	1		
22	910200400026		Screw	3		
23	212118020002		Mat	1		

1= Supply as package. 2= Supply with constraints. 3= Phasing-out supply. 4= Supply as assembly. 5= Check other tables.

05 Seat (213346037501)

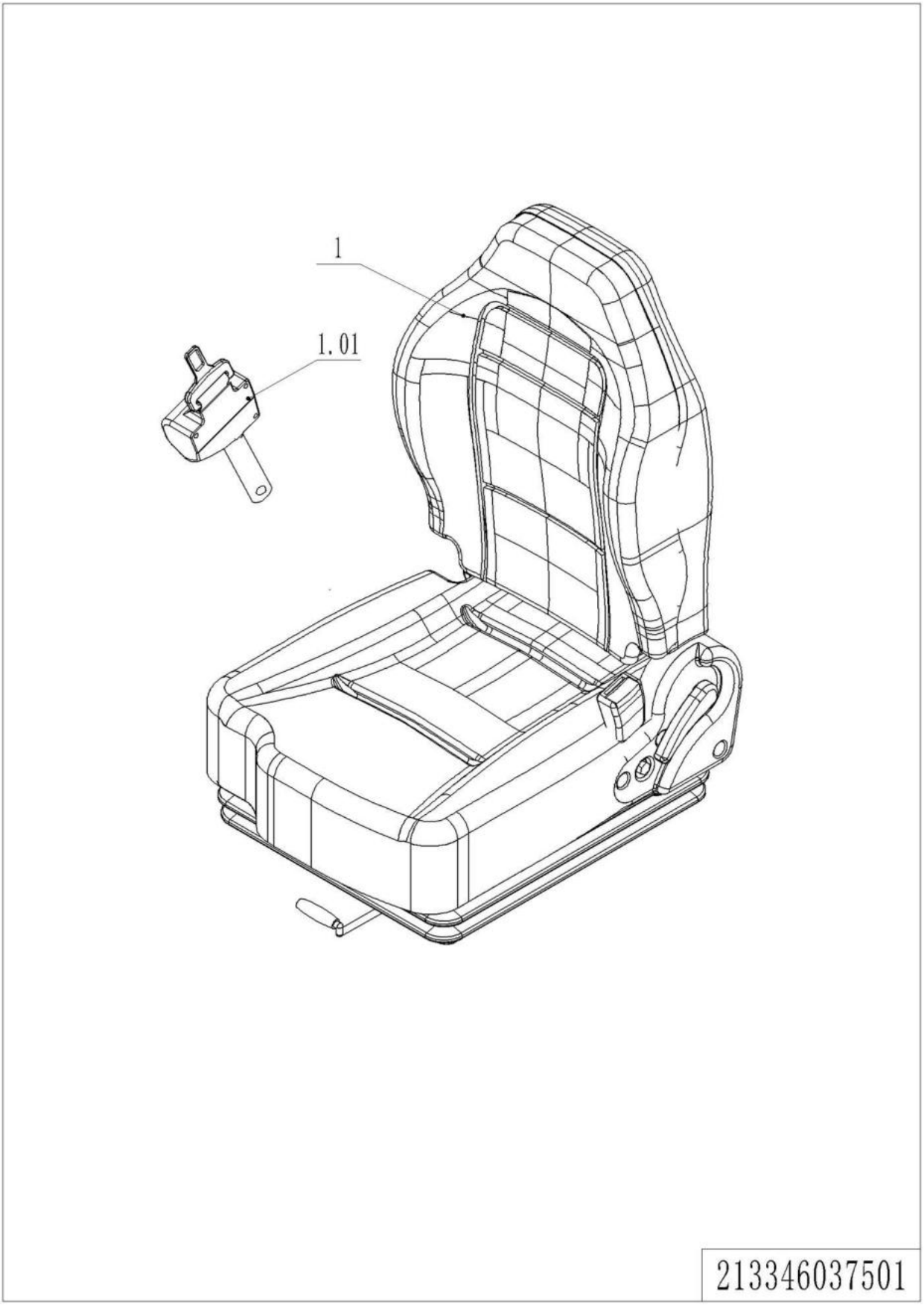

1= Supply as package. 2= Supply with constraints. 3= Phasing-out supply. 4= Supply as assembly. 5= Check other tables.

05 Seat (213346037501)

No.	Item Code	Mark	Item Description	Qty.	Substitute	Note
1	213037510000		Seat	1		
1.01	213098510052		Safety Belt	1		

1= Supply as package. 2= Supply with constraints. 3= Phasing-out supply. 4= Supply as assembly. 5= Check other tables.

Chapter 4: Mast

01 Outer Mast (213346044501)

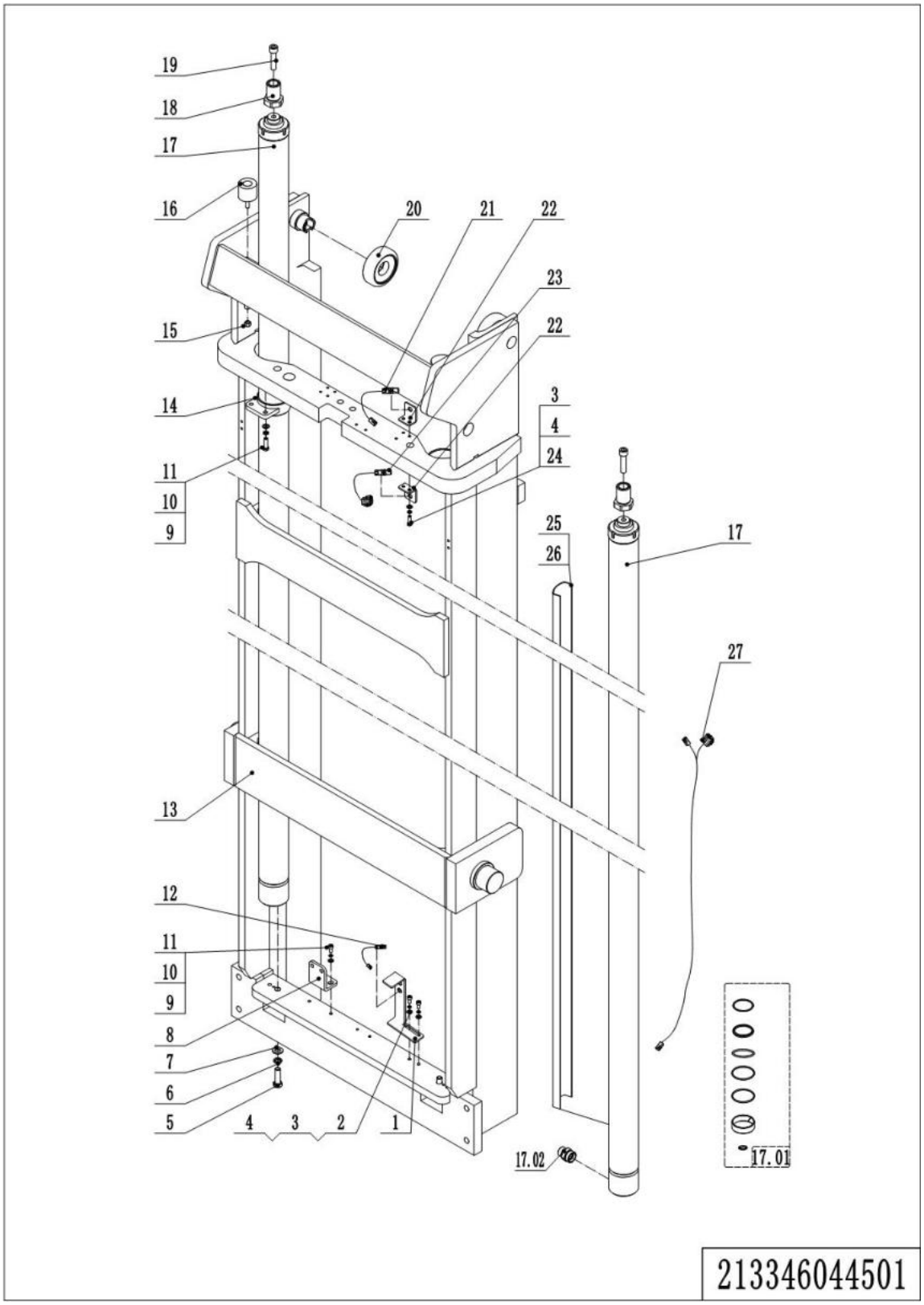

01 Outer Mast (213346044501)

No.	Item Code	Mark	Item Description	Qty.	Substitute	Note
1	212144520297		Fixing Plate	1		
2	910200200033		Screw	2		
3	910400500005		Spring Washer	6		
4	910400100005		Flat Washer	6		
5	910100400012		Bolt	2		
6	910400500008		Spring Washer	2		
7	910400100008		Flat Washer	2		
8	212144520062		Fixing Plate	1		
9	910200200058		Screw	6		
10	910400500006		Spring Washer	6		
11	910400100006		Flat Washer	6		
12	212133510005		Proximity Switch	1		
13	213344510005		Outer Mast(10000)	1		10000
13	213344510006		Outer Mast(10500)	1		10500
13	213344510007		Outer Mast(11000)	1		11000
13	213344510008		Outer Mast(11500)	1		11500
13	213344510009		Outer Mast(12000)	1		12000
13	213344510010		Outer Mast(12500)	1		12500
14	213344510000		Fixing Base	2		
15	910300500008		Nut	2		
16	212144520065		Crash Pad	2		
17	213344510020		Cylinder(10000)	2		10000
17	213344510021		Cylinder(10500)	2		10500
17	213344510022		Cylinder(11000)	2		11000
17	213344510023		Cylinder(11500)	2		11500
17	213344510024		Cylinder(12000)	2		12000
17	213344510025		Cylinder	2		12500
17.01	213398520001		Seal Kit	1		
17.02	212198520022		Anti-explosion Valve	1		
18	212144520060		Barrel	2		

1= Supply as package. 2= Supply with constraints. 3= Phasing-out supply. 4= Supply as assembly. 5= Check other tables.

01 Outer Mast (213346044501) Continuation

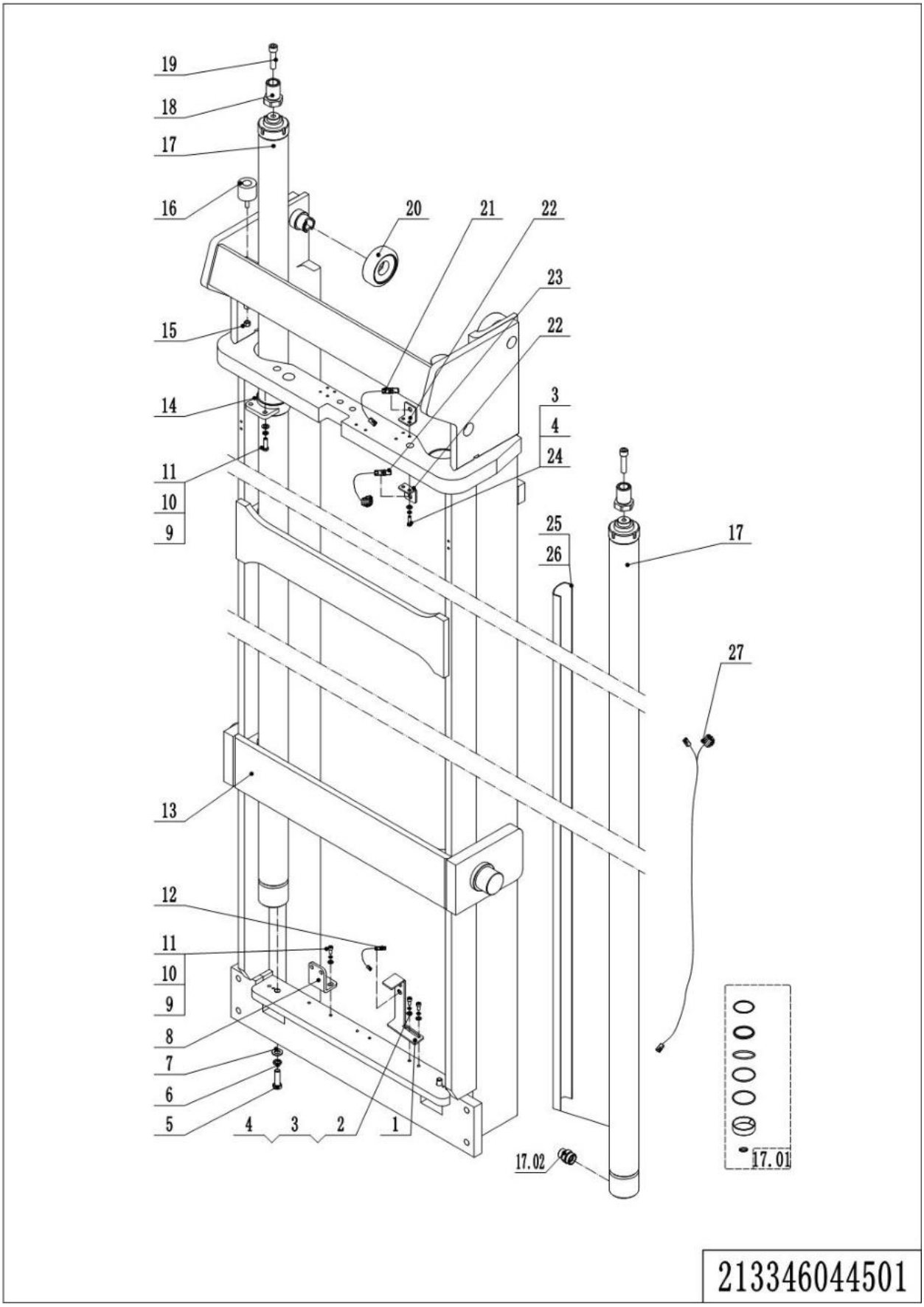

1= Supply as package. 2= Supply with constraints. 3= Phasing-out supply. 4= Supply as assembly. 5= Check other tables.

01 Outer Mast (213346044501) Continuation

No.	Item Code	Mark	Item Description	Qty.	Substitute	Note
19	910100300054		Bolt	2		
20	940200300052		Compound Roller	2		
21	212133510008		Proximity Switch	1		
22	212144520061		Fixing Plate	2		
23	212133510006		Proximity Switch	1		
24	910200500052		Screw	4		
25	213344520005		Shield	1		10000
25	213344520006		Shield	1		10500
25	213344520007		Shield	1		11000
25	213344520008		Shield	1		11500
25	213344520009		Shield	1		12000
25	213344520010		Shield	1		12500
26	911000600007		Hose Clamp	6		
27	213333010001		Wire Harness	1		10000
27	213333010002		Wire Harness	1		10500
27	213333010003		Wire Harness	1		11000
27	213333010004		Wire Harness	1		11500
27	213333010005		Wire Harness	1		12000
27	213333010006		Wire Harness	1		12500

02 Middle Mast (213346044502)

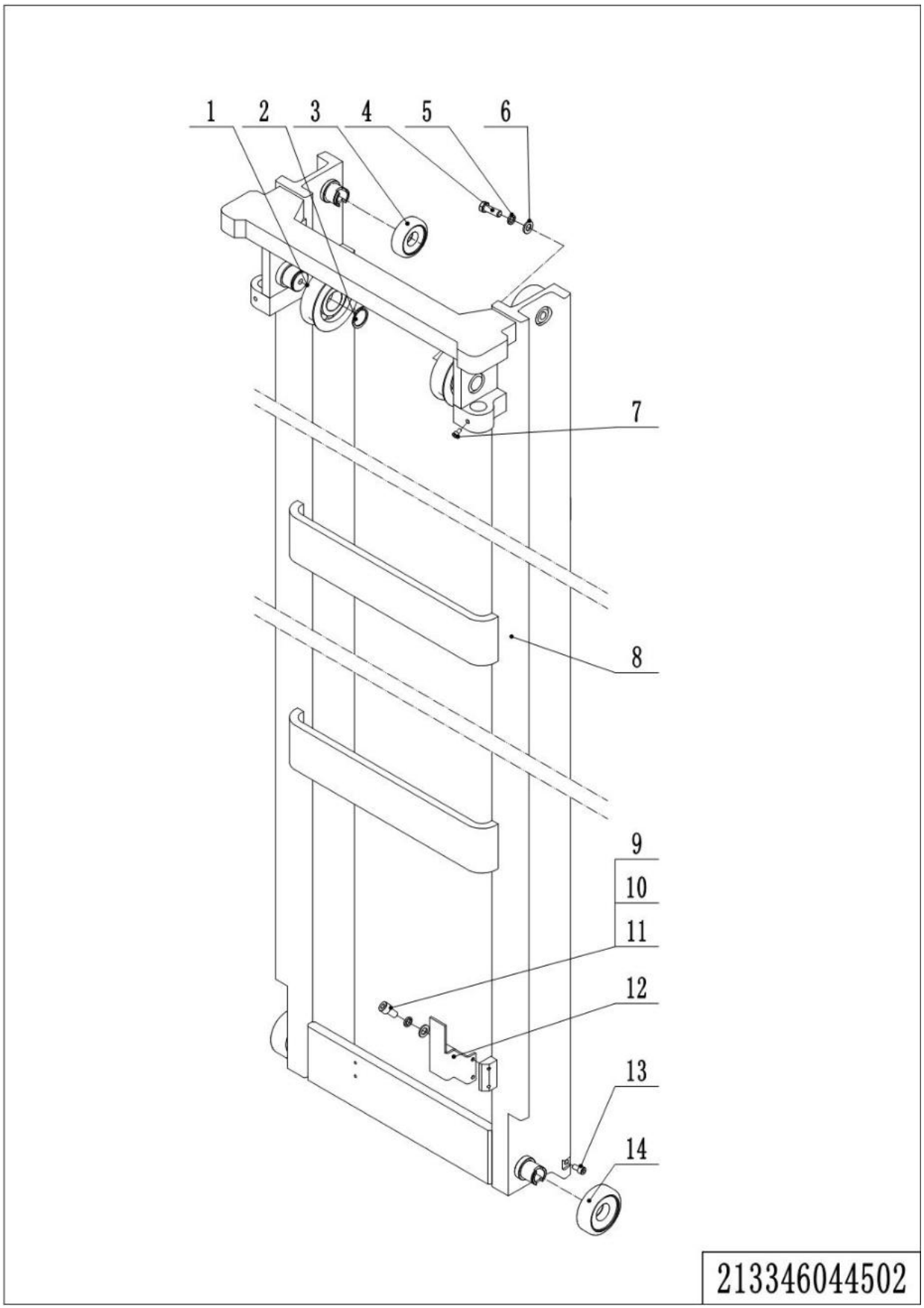

1= Supply as package. 2= Supply with constraints. 3= Phasing-out supply. 4= Supply as assembly. 5= Check other tables.

02 Middle Mast (213346044502)

No.	Item Code	Mark	Item Description	Qty.	Substitute	Note
1	940200500001		Sprocket Bearing	2		
2	910401300020		Circlip	2		
3	940200300046		Compound Roller	2		
4	910100300051		Bolt	1		
5	910400500008		Spring Washer	1		
6	910400100008		Flat Washer	1		
7	910200900014		Screw	2		
8	213344510011		Middle Mast(10000)	1		10000
8	213344510012		Middle Mast(10500)	1		10500
8	213344510013		Middle Mast(11000)	1		11000
8	213344510014		Middle Mast(11500)	1		11500
8	213344510015		Middle Mast(12000)	1		12000
8	213344510016		Middle Mast(12500)	1		12500
9	910200200036		Screw	2		
10	910400500005		Spring Washer	2		
11	910400100005		Flat Washer	2		
12	212144520066		Fixing Plate	1		
13	910200200096		Screw	2		
14	940200300052		Compound Roller	2		

03 Inner Mast (213346044503)

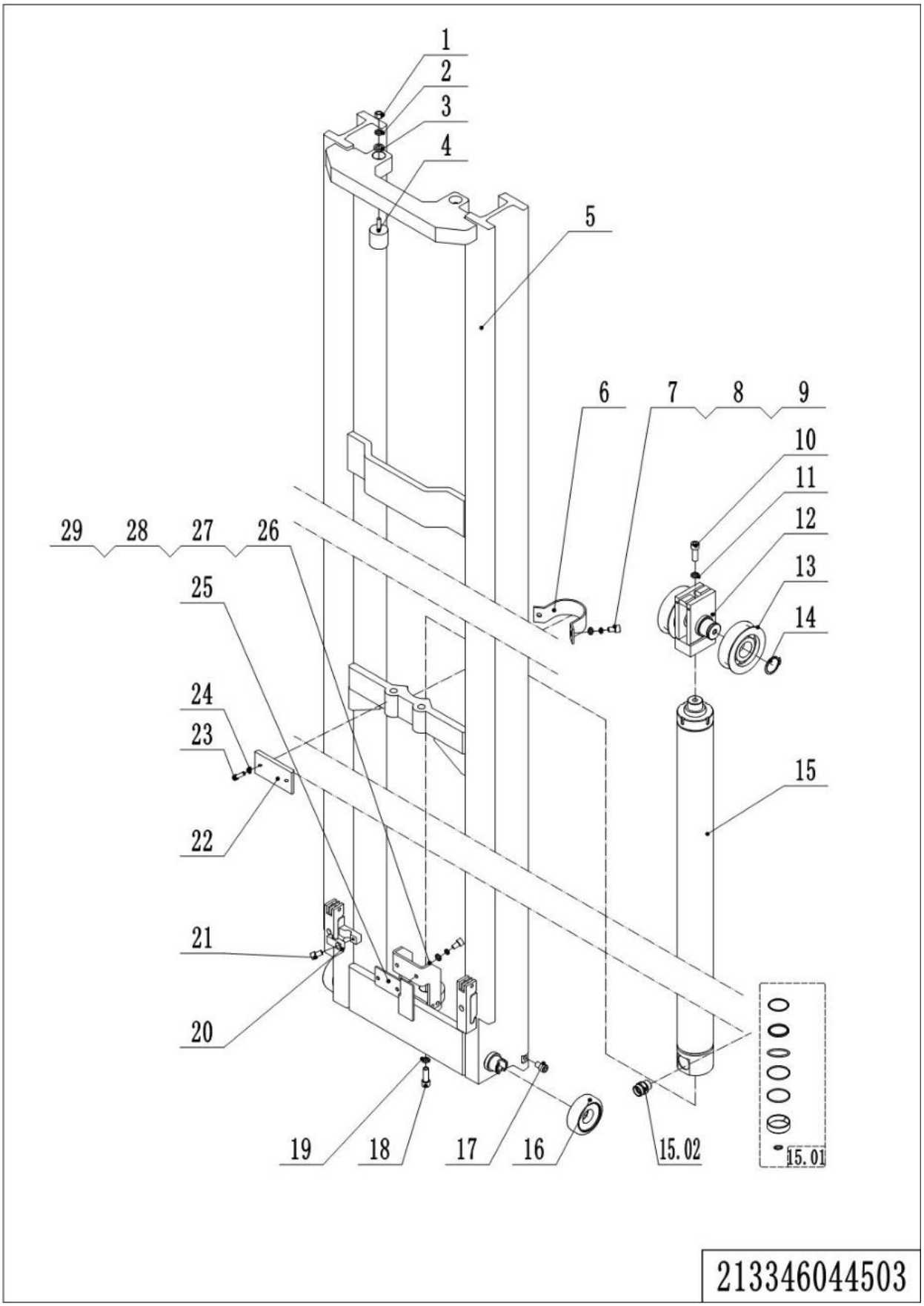

1= Supply as package. 2= Supply with constraints. 3= Phasing-out supply. 4= Supply as assembly. 5= Check other tables.

03 Inner Mast (213346044503)

No.	Item Code	Mark	Item Description	Qty.	Substitute	Note
1	910300500004		Nut	2		
2	910400500006		Spring Washer	3		
3	910400100006		Flat Washer	2		
4	212144520242		Crash Pad	2		
5	213344510051		Inner Mast(10000)	1		10000
5	213344510052		Inner Mast(10500)	1		10500
5	213344510053		Inner Mast(11000)	1		11000
5	213344510054		Inner Mast(11500)	1		11500
5	213344510055		Inner Mast(12000)	1		12000
5	213344510056		Inner Mast(12500)	1		12500
6	212144520068		Fixing Plate	1		
7	910100200005		Bolt	2		
8	910400500007		Spring Washer	2		
9	910400100007		Flat Washer	2		
10	910200200099		Screw	2		
11	910400500008		Spring Washer	4		
12	212144510049		Yoke	1		
13	940200500001		Sprocket Bearing	2		
14	910401300020		Circlip	2		
15	213344510031		Cylinder(10000)	1		10000
15	213344510026		Cylinder(10500)	1		10500
15	213344510027		Cylinder(11000)	1		11000
15	213344510028		Cylinder(11500)	1		11500
15	213344510029		Cylinder(12000)	1		12000
15	213344510030		Cylinder	1		12500
15.01	212198510003		Seal Kit	1		
15.02	212198520036		Anti-explosion Valve	1		
16	940200300046		Compound Roller	2		
17	910200200096		Screw	2		
18	910100200005		Bolt	1		

1= Supply as package. 2= Supply with constraints. 3= Phasing-out supply. 4= Supply as assembly. 5= Check other tables.

03 Inner Mast (213346044503) Continuation

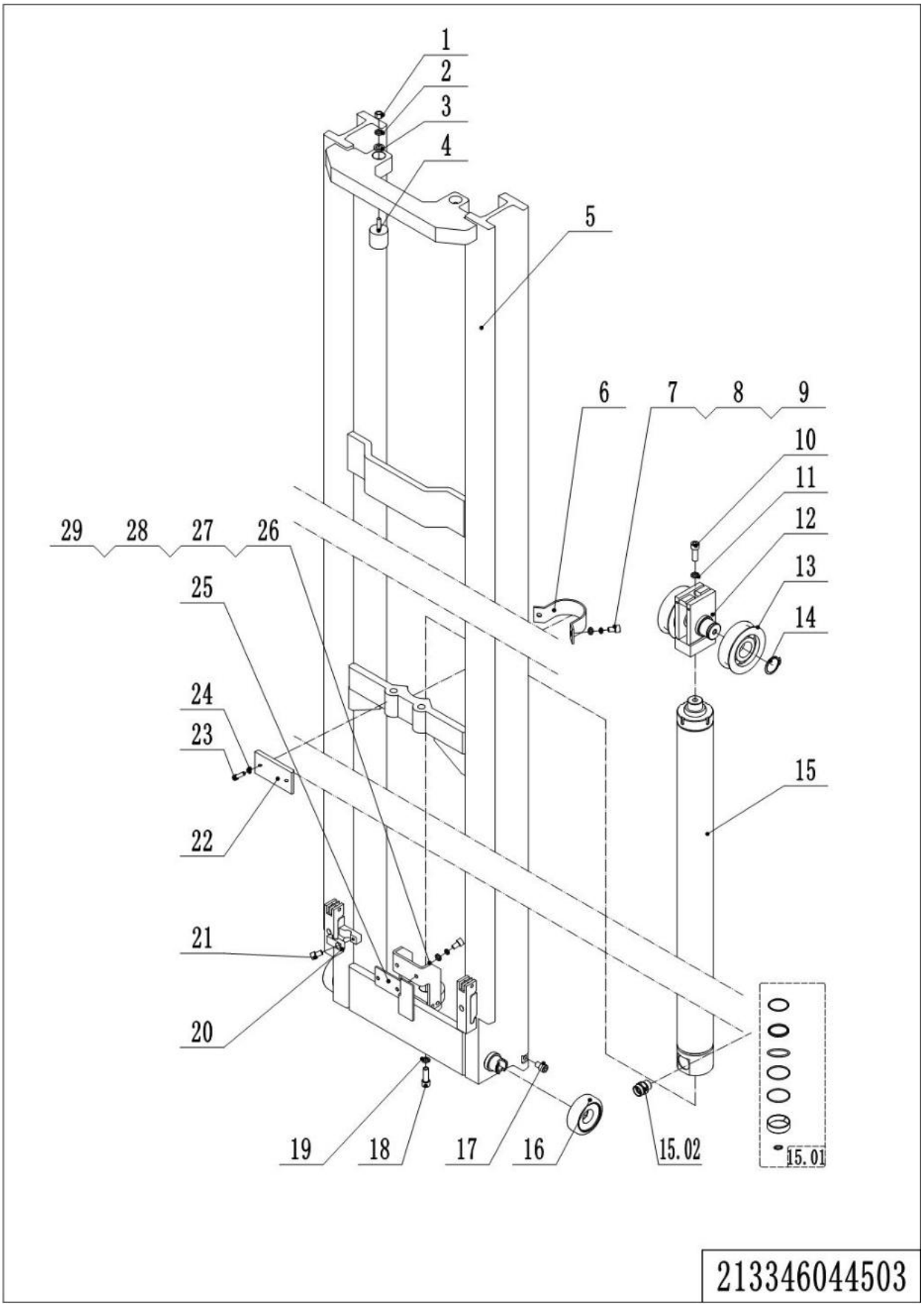

03 Inner Mast (213346044503) Continuation

No.	Item Code	Mark	Item Description	Qty.	Substitute	Note
19	910400100008		Flat Washer	1		
20	213044520110		Pipe Clip	1		
21	910200200055		Screw	1		
22	212144520236		Press Plate	1		
23	910200500051		Screw	2		
24	910400500005		Spring Washer	2		
25	212144520298		Mounting Plate	1		
26	212144520049		Mounting Base	1		
27	910400100006	1	Flat Washer	2		
28	910400500006	1	Spring Washer	2		
29	910200200058	1	Screw	2		

04 Reach Frame (213346044504)

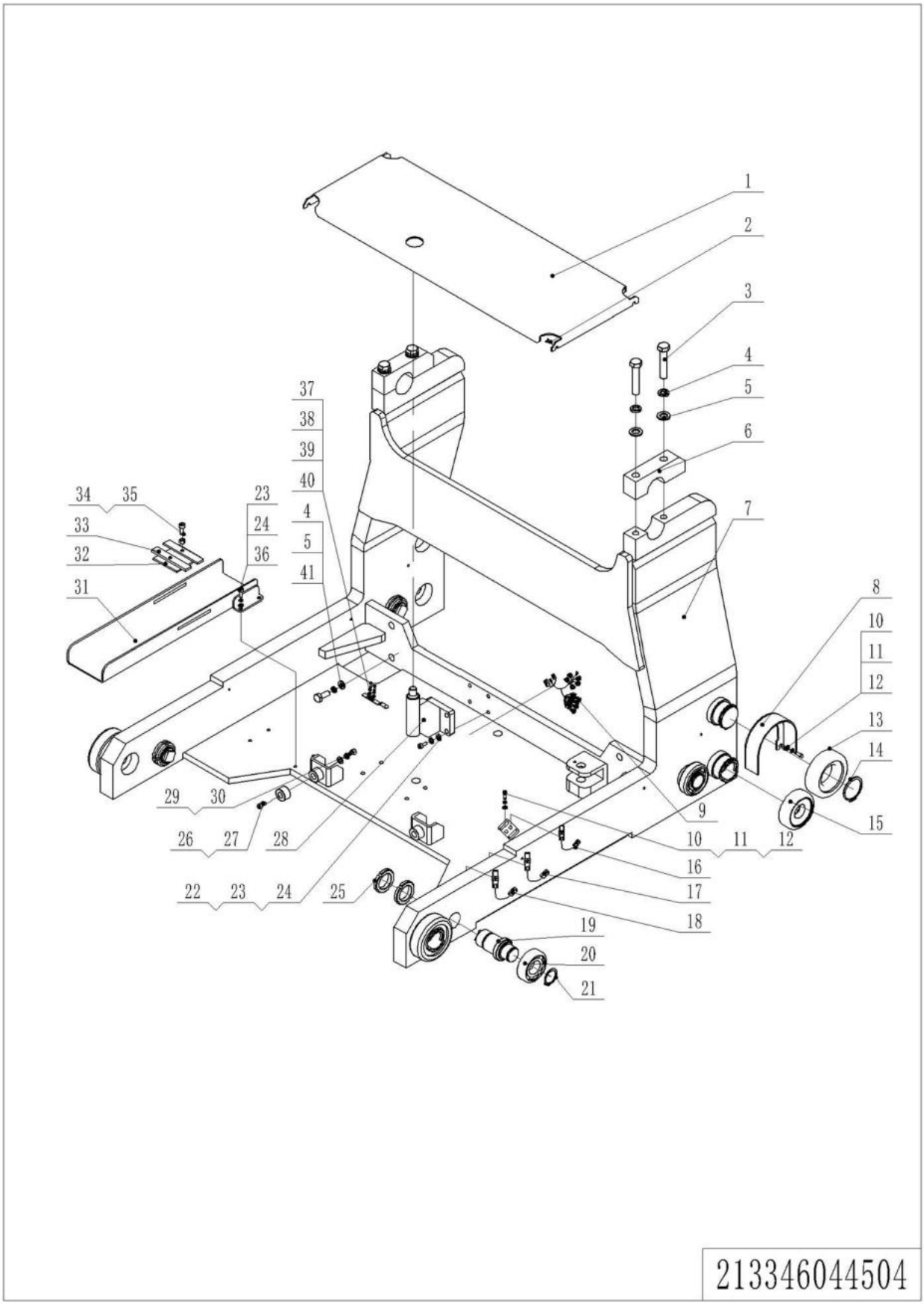

1= Supply as package. 2= Supply with constraints. 3= Phasing-out supply. 4= Supply as assembly. 5= Check other tables.

04 Reach Frame (213346044504)

No.	Item Code	Mark	Item Description	Qty.	Substitute	Note
1	213344520004		Close Plate	1		
2	910100300009		Bolt	4		
3	910100400039		Bolt	4		
4	910400500010		Spring Washer	8		
5	910400100010		Flat Washer	8		
6	213344520003		Fixing Plate	2		
7	213344510001		Frame	1		
8	212144510081		Protective Cover	2		
9	212133010015		Wire Harness	1		
10	910200200036		Screw	10		
11	910400100005		Flat Washer	10		
12	910400500005		Spring Washer	10		
13	940200100042		Main Roller	2		
14	910401300026		Circlip	6		
15	940200300042		Compound Roller	4		
16	212133510002		Proximity Switch	1		
17	212133510003		Proximity Switch	1		
18	212133510004		Proximity Switch	1		
19	212144520218		Axle	4		
20	940200100008		Main Roller	4		
21	910401300018		Circlip	4		
22	910200200079		Screw	4		
23	910400100007		Flat Washer	4		
24	910400500007		Spring Washer	4		
25	910300800008		Nut	8		
26	532621520062		Crash Pad	2		
27	910200200060		Screw	2		
28	212144510051		Fixing Base	1		
29	910300500004		Nut	2		
30	910400100006		Flat Washer	8		

1= Supply as package. 2= Supply with constraints. 3= Phasing-out supply. 4= Supply as assembly. 5= Check other tables.

04 Reach Frame (213346044504) Continuation

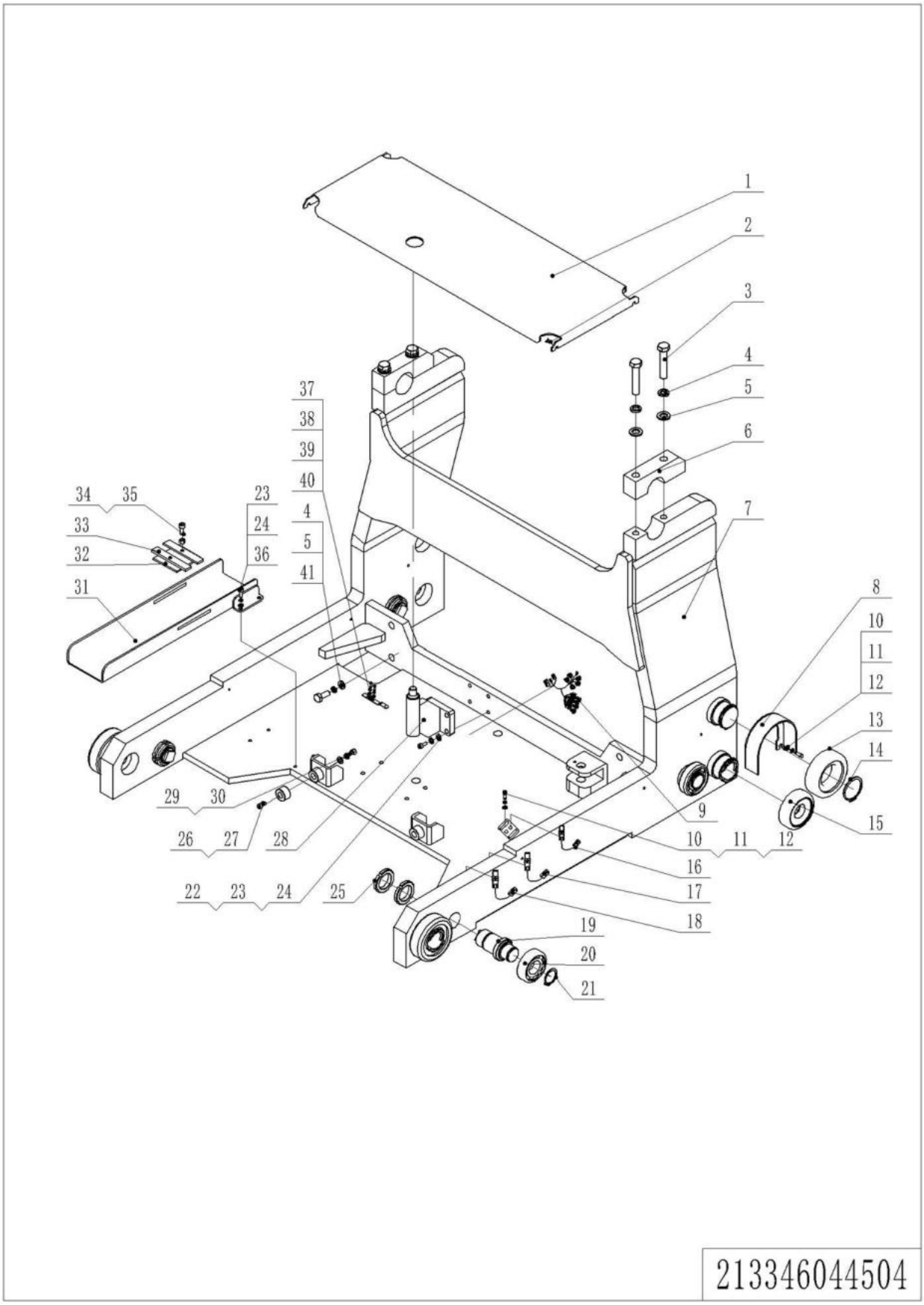

04 Reach Frame (213346044504) Continuation

No.	Item Code	Mark	Item Description	Qty.	Substitute	Note
31	212125010000		Guide Slot	1		
32	212125020011		Plate	1		
33	212125020030		Press Plate	2		
34	910200200058		Screw	4		
35	910300100006		Nut	4		
36	910200200057		Screw	4		
37	910200500037		Screw	18		
38	910400500004		Spring Washer	18		
39	910400100004		Flat Washer	18		
40	921300300005		Holder	9		
41	910100200014		Bolt	4		

05 Fork Carriage (213346044505)

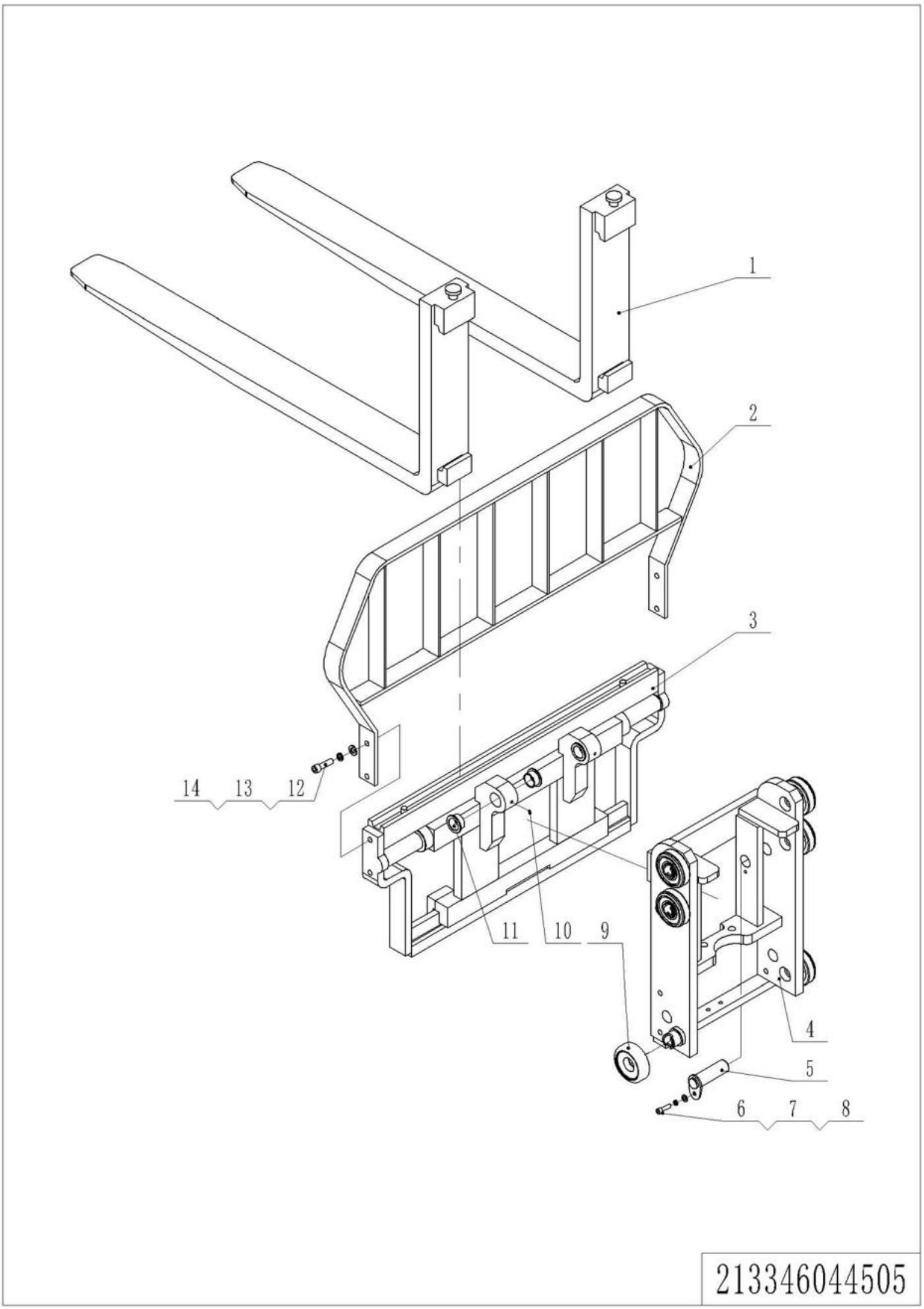

1= Supply as package. 2= Supply with constraints. 3= Phasing-out supply. 4= Supply as assembly. 5= Check other tables.

05 Fork Carriage (213346044505)

No.	Item Code	Mark	Item Description	Qty.	Substitute	Note
1	940100100008		Fork120x40x1070	2		
1	940100100009		Fork120x40x1220	2		
1	940100100010		Fork120x40x1150	2		
1	940100100011		Fork120x40x1370	2		
1	940100100012		Fork120x40x1520	2		
1	940100100056		Fork120x40x1070 -side hole	2		Wireless Monitor
1	940100100059		Fork120x40x1220-side hole	2		Wireless Monitor
1	940100100058		Fork120x40x1150-side hole	2		Wireless Monitor
1	940100100060		Fork120x40x1370-side hole	2		Wireless Monitor
1	940100100061		Fork120x40x1520-side hole	2		Wireless Monitor
2	212140510000		Load Backrest	1		
3	940100200006		Side Shifter	1		
4	212138010000		Carriage	1		
5	212138010003		Pin	2		
6	910200300025		Screw	2		
7	910400100006		Flat Washer	2		
8	910400500019		Spring Washer	2		
9	940200300040		Compound Roller	6		
10	911200100002		Oil Cup	2		
11	940500400013		Bearing	4		
12	910100300050		Bolt	4		
13	910400500008		Spring Washer	4		
14	910400100008		Flat Washer	4		

1= Supply as package. 2= Supply with constraints. 3= Phasing-out supply. 4= Supply as assembly. 5= Check other tables.

06 Hydraulic Unit (Mast) (213346044506)

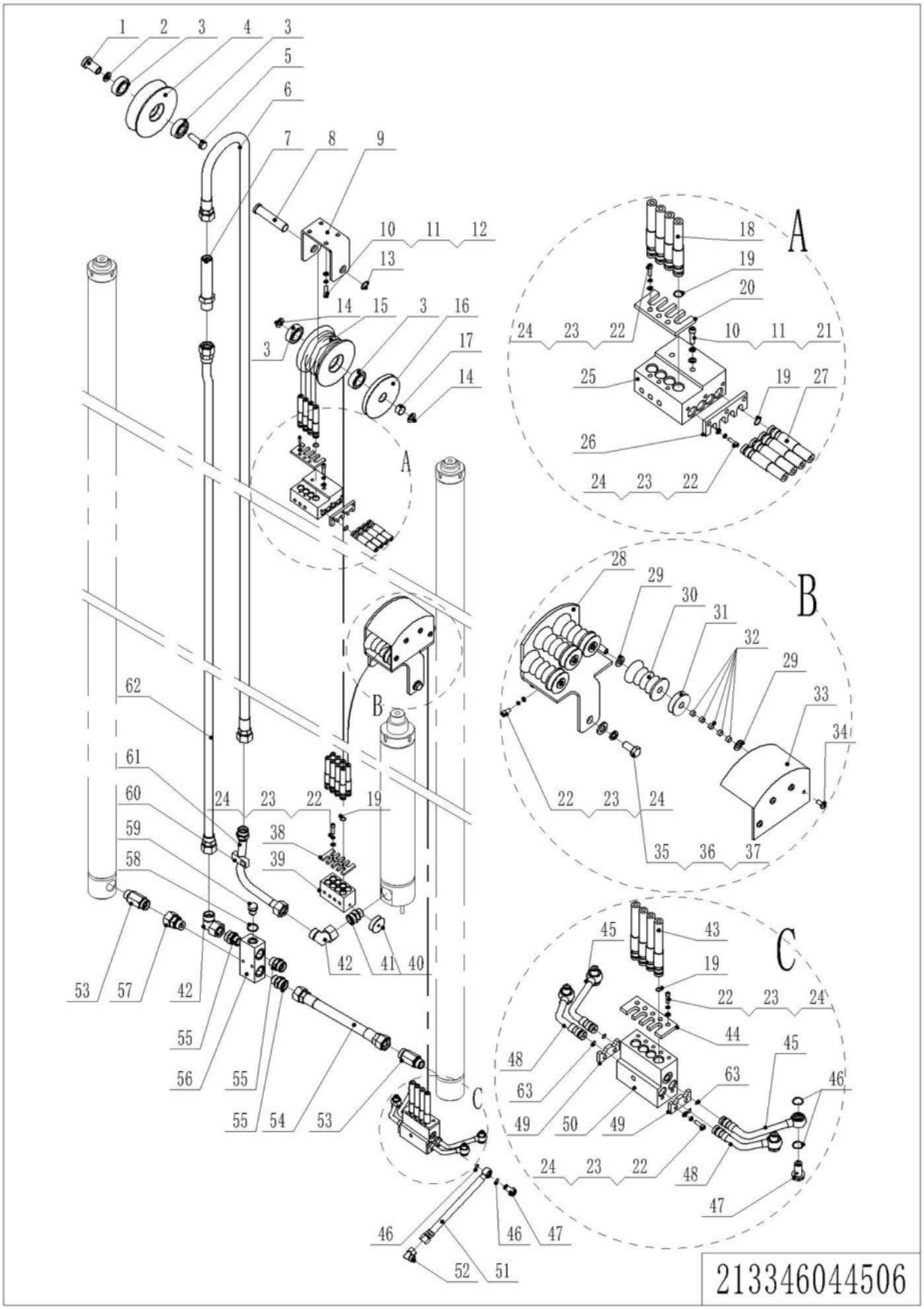

1= Supply as package. 2= Supply with constraints. 3= Phasing-out supply. 4= Supply as assembly. 5= Check other tables.

06 Hydraulic Unit (Mast) (213346044506)

No.	Item Code	Mark	Item Description	Qty.	Substitute	Note
1	212144520051		Pin	1		
2	212144520052		Washer	1		
3	910700200019		Bearing	4		
4	212144520050		Pulley	1		
5	910100300057		Bolt	1		
6	213344520075		Hose	1		10000
6	213344520076		Hose	1		10500
6	213344520077		Hose	1		11000
6	213344520078		Hose	1		11500
6	213344520079		Hose	1		12000
6	213344520080		Hose	1		12500
7	950400500003		Joint	1		
8	212144520057		Pin	1		
9	212144520044		Mounting Base	1		
10	910400100006		Flat Washer	10		
11	910400500006		Spring Washer	15		
12	910200200058		Screw	13		
13	910401300011		Circlip	1		
14	212144520056		Washer	2		
15	212144520053		Pulley	1		
16	212144520054		Pulley	1		
17	940500100016		Bushing	1		
18	213344520062		Hose	4		10000
18	213344520063		Hose	4		10500
18	213344520064		Hose	4		11000
18	213344520065		Hose	4		11500
18	213344520066		Hose	4		12000
18	213344520067		Hose	4		12500
19	910800100124		O-Ring	26		
20	212144520045		Plate	1		

1= Supply as package. 2= Supply with constraints. 3= Phasing-out supply. 4= Supply as assembly. 5= Check other tables.

06 Hydraulic Unit (Mast) (213346044506) Continuation

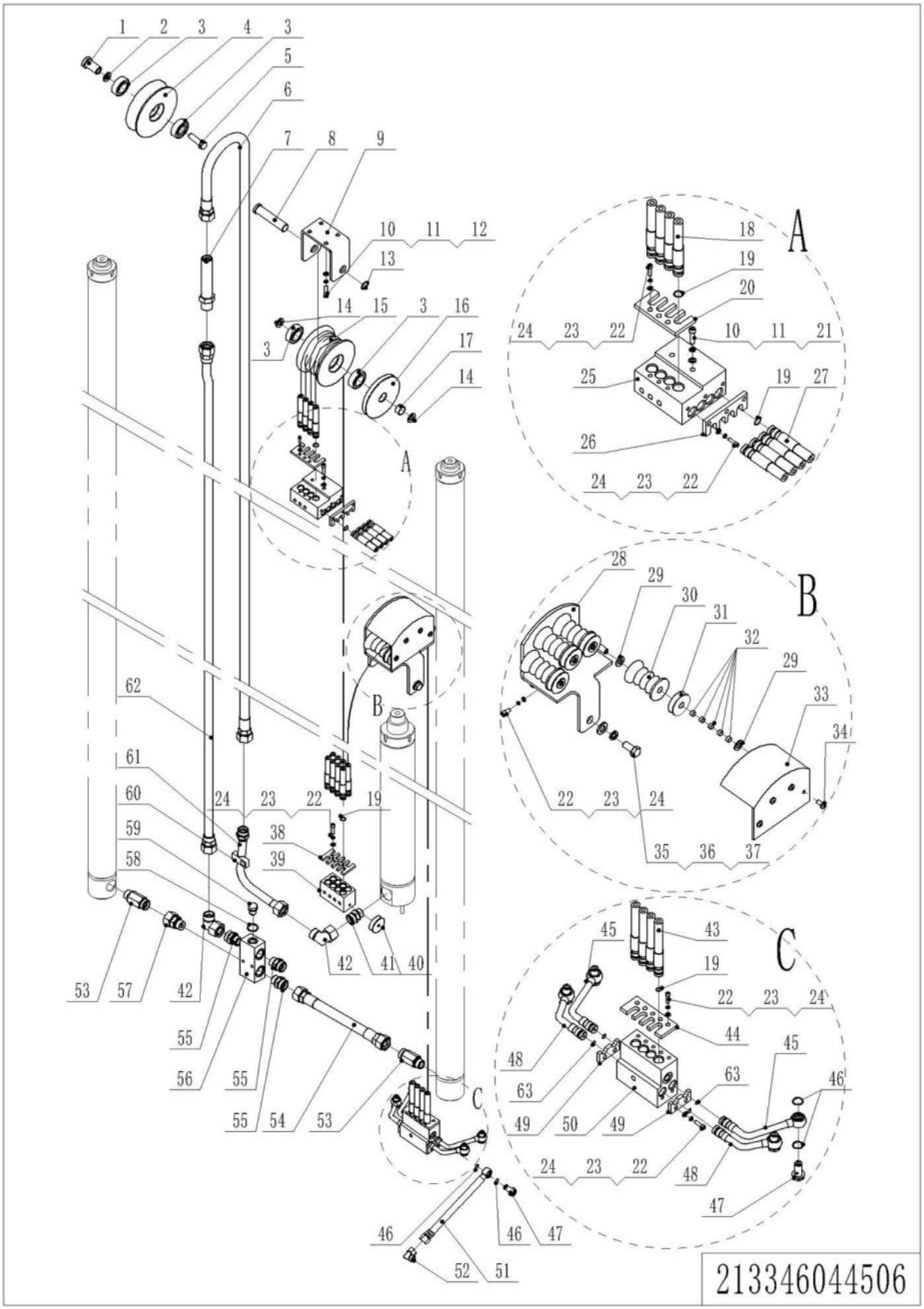

1= Supply as package. 2= Supply with constraints. 3= Phasing-out supply. 4= Supply as assembly. 5= Check other tables.

06 Hydraulic Unit (Mast) (213346044506) Continuation

No.	Item Code	Mark	Item Description	Qty.	Substitute	Note
21	910200200062		Screw	2		
22	910200200035		Screw	16		
23	910400500005		Spring Washer	16		
24	910400100005		Flat Washer	16		
25	212144520047		Valve Block	1		
26	212144520046		Plate	1		
27	213325020005		Hose	4		10000
27	213325020006		Hose	4		10500
27	213325020007		Hose	4		11000
27	213325020008		Hose	4		11500
27	213325020009		Hose	4		12000
27	213325020010		Hose	4		12500
28	212144510047		Wheel Casing	1		
29	910400100007		Flat Washer	8		
30	212144520058		Pulley	4		
31	212144520059		Pulley	4		
32	940500100079		Bushing	20		
33	212144510046		Wheel Casing	1		
34	910200500052		Screw	4		
35	910100300048		Bolt	2		
36	910400500008		Spring Washer	3		
37	910400100008		Flat Washer	2		
38	212144520040		Plate	1		
39	212144520039		Valve Block	1		
40	212144520037		Pulley	1		
41	212198520036		Anti-explosion Valve	1		
42	950400200006		Joint	2		
43	213344520056		Hose	4		10000
43	213344520057		Hose	4		10500
43	213344520058		Hose	4		11000

06 Hydraulic Unit (Mast) (213346044506) Continuation 2

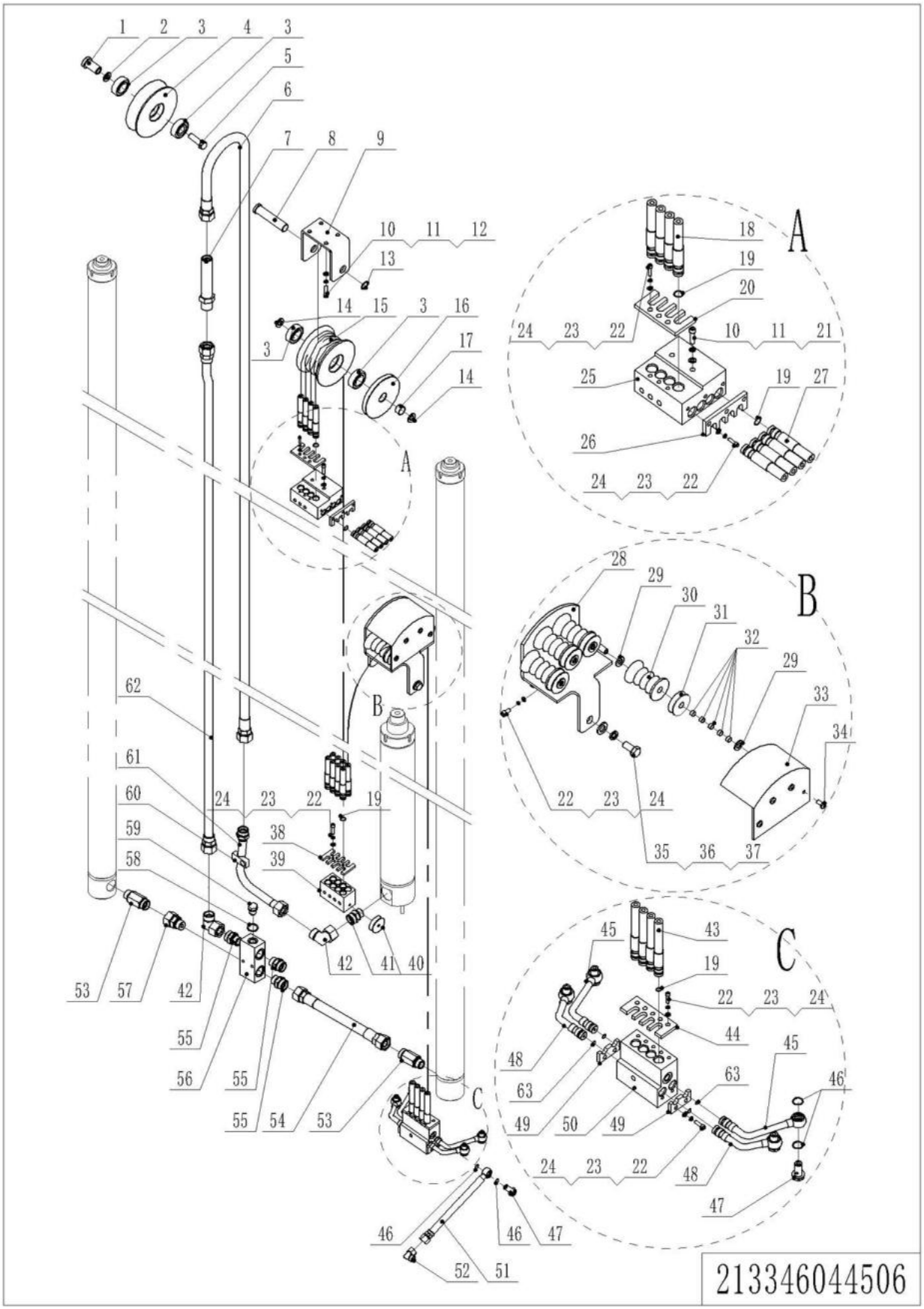

1= Supply as package. 2= Supply with constraints. 3= Phasing-out supply. 4= Supply as assembly. 5= Check other tables.

06 Hydraulic Unit (Mast) (213346044506) Continuation 2

No.	Item Code	Mark	Item Description	Qty.	Substitute	Note
43	213344520059		Hose	4		11500
43	213344520060		Hose	4		12000
43	213344520061		Hose	4		12500
44	212144520032		Plate	1		
45	212144520033		Steel Tube	2		
46	910800100125		O-Ring	4		
47	212144520042		Bolt	4		
48	212144520034		Steel Tube	2		
49	212144520031		Plate	2		
50	212144520030		Valve Block	1		
51	212144520035		Hose	2		
52	950400200001		Joint	2		
53	212198520022		Anti-explosion Valve	2		
54	212144520036		Hose	1		
55	950400400011		Joint	3		
56	212144520041		Valve Block	1		
57	950400100003		Joint	1		
58	910800900005		Bonded Washer	1		
59	911300100001		Screw Plug	1		
60	213044520110		Pipe Clip	1		
61	212144520048		Steel Tube	1		
62	213344520068		Steel Tube	1		10000
62	213344520069		Steel Tube	1		10500
62	213344520070		Steel Tube	1		11000
62	213344520071		Steel Tube	1		11500
62	213344520072		Steel Tube	1		12000
62	213344520073		Steel Tube	1		12500
63	910800100061		O-Ring	4		

Chapter 5: Steering System, Braking System, Wheels

01 Steering Wheel (213346031501)

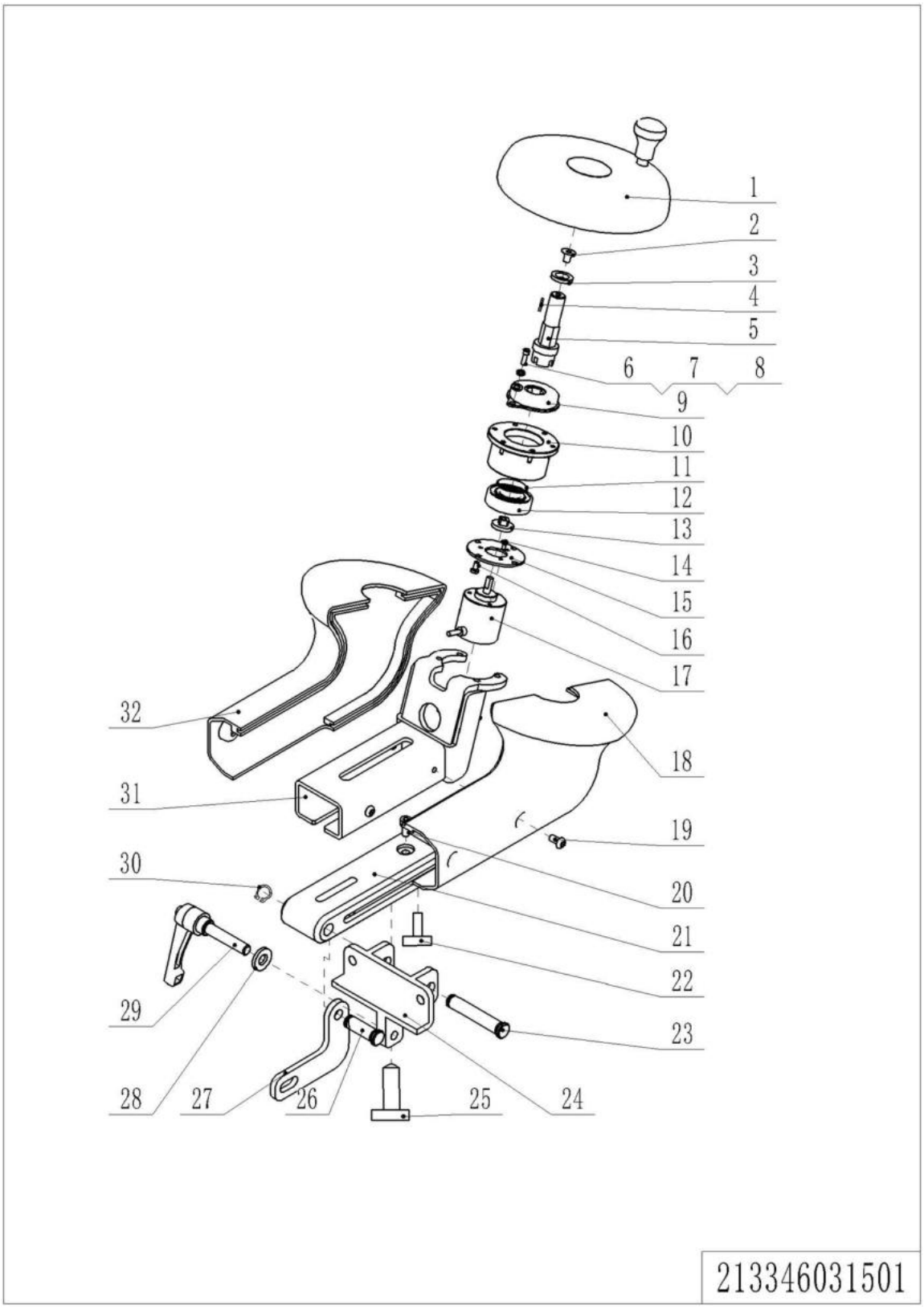

1= Supply as package. 2= Supply with constraints. 3= Phasing-out supply. 4= Supply as assembly. 5= Check other tables.

01 Steering Wheel (213346031501)

No.	Item Code	Mark	Item Description	Qty.	Substitute	Note
1	940801700001		Handwheel	1		
2	910200400015		Screw	1		
3	212131520006		Washer	1		
4	910600800004		Flat Key	1		
5	212131520005		Axle	1		
6	910200500038		Screw	5		
7	910400100004		Flat Washer	5		
8	910400500004		Spring Washer	5		
9	204010020004		Damper	1		
10	212131520007		Bracket	1		
11	910401400012		Circlip	1		
12	910700200004		Bearing	1		
13	505931520002		Link Block	1		
14	910200500009		Screw	3		
15	212131520008		Fixing Plate	1		
16	910200500021		Screw	4		
17	212131510002		Potentiometer	1		
18	212131520001		Protective Cover	1		
19	910200300017		Screw	4		
20	910200200033		Screw	1		
21	212131520004		Sliding Block	1		
22	212131520015		Handwheel	1		
23	440517020002		Pin	1		
24	212131510000		Fixing Base	1		
25	212131520015		Handwheel	1		
26	213031540015		Pin	1		
27	212131520003		Fixing Plate	1		
28	212131520002		Washer	1		
29	272031510001		Handle	1		
30	910401300003		Circlip	1		

1= Supply as package. 2= Supply with constraints. 3= Phasing-out supply. 4= Supply as assembly. 5= Check other tables.

01 Steering Wheel (213346031501) Continuation

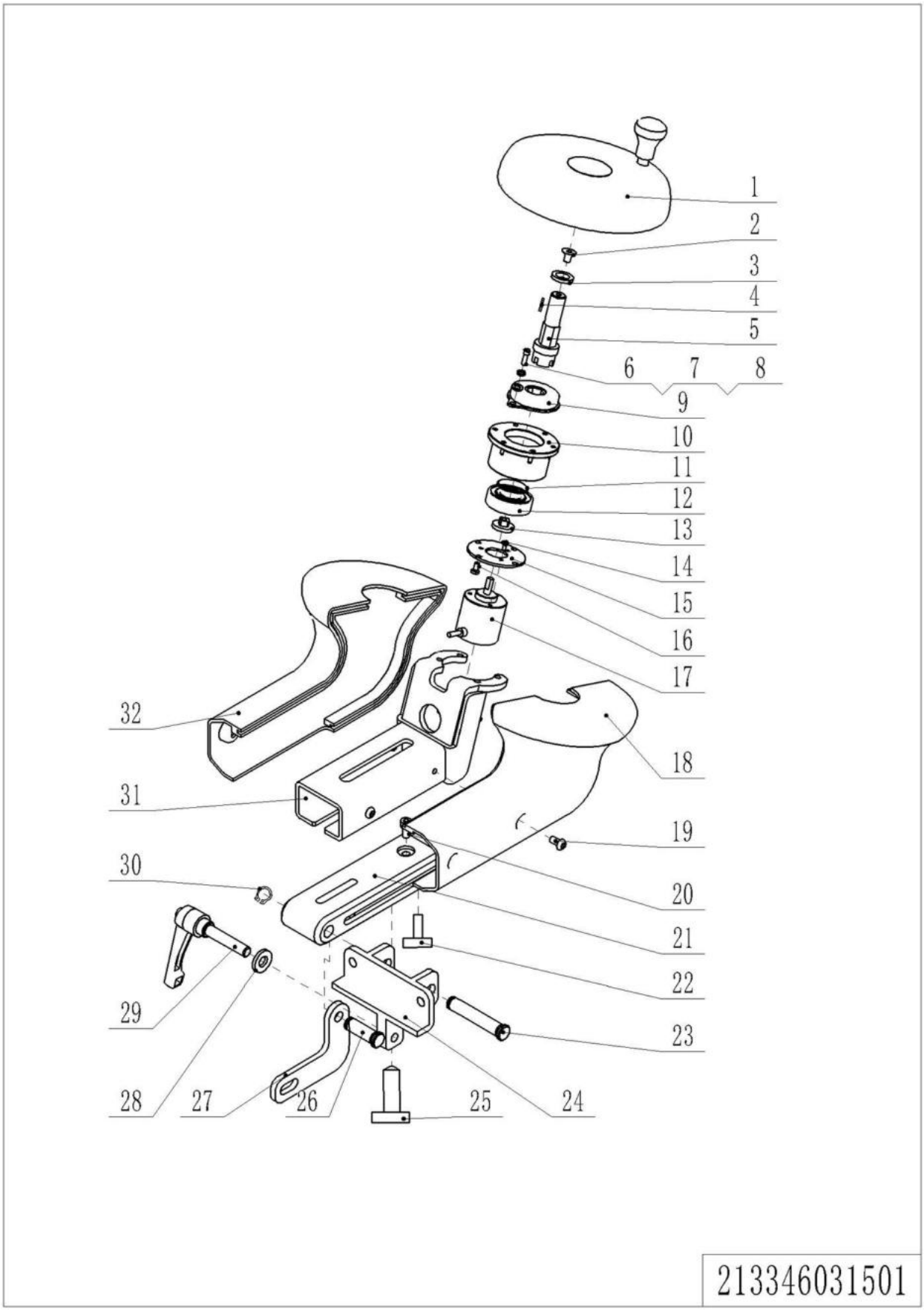

1= Supply as package. 2= Supply with constraints. 3= Phasing-out supply. 4= Supply as assembly. 5= Check other tables.

01 Steering Wheel (213346031501) Continuation

No.	Item Code	Mark	Item Description	Qty.	Substitute	Note
31	212131510001		Fixing Base	1		
32	212131520000		Protective Cover	1		

02 Brake Pedal (213346011501)

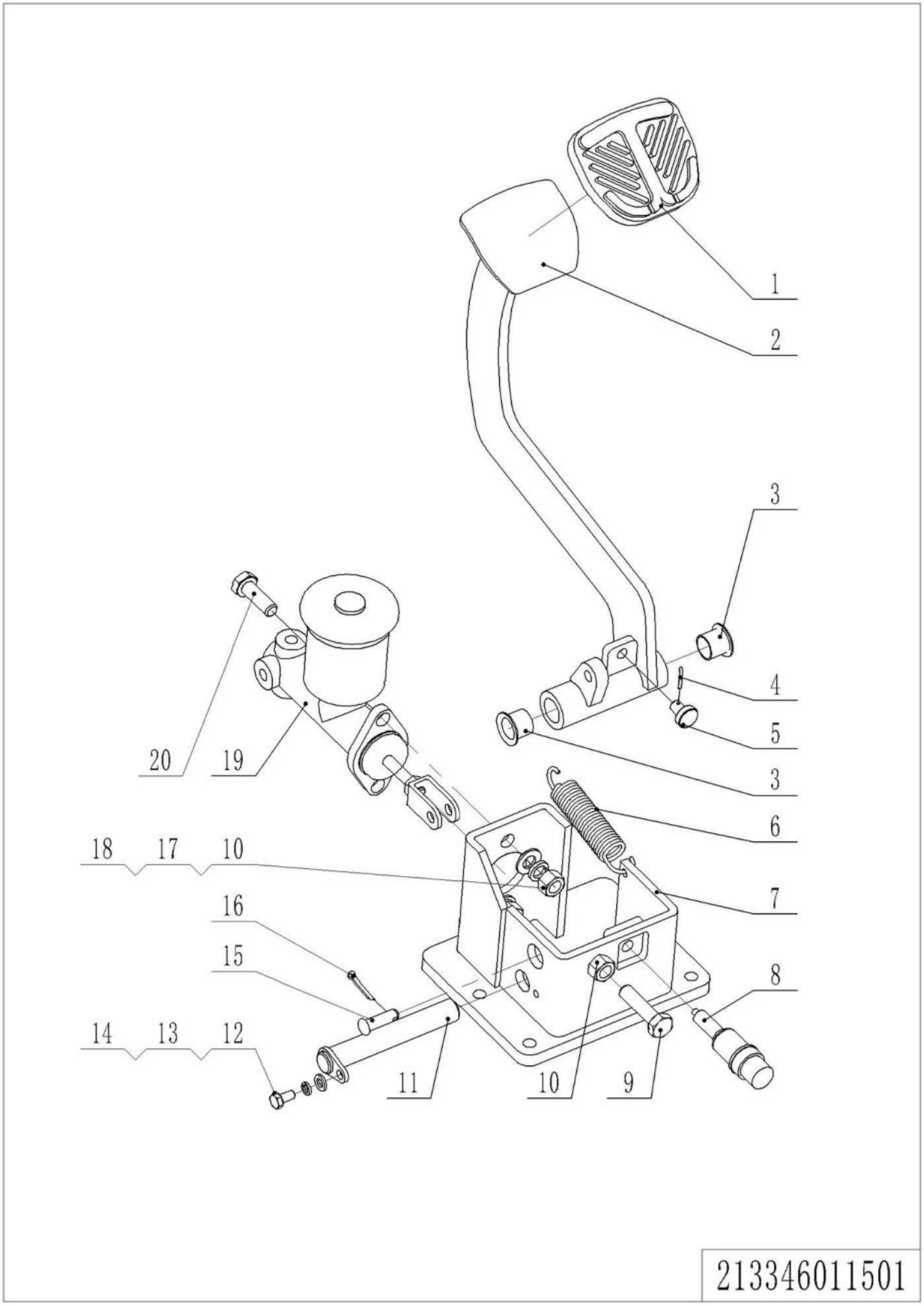

1= Supply as package. 2= Supply with constraints. 3= Phasing-out supply. 4= Supply as assembly. 5= Check other tables.

02 Foot Brake Unit (213346011501)

No.	Item Code	Mark	Item Description	Qty.	Substitute	Note
1	253511520010		Rubber Mat	1		
2	212111510003		Pedal	1		
3	940500200016		Bushing	2		
4	910600600011		Cotter Pin	1		
5	251011520015		Crash Pad	1		
6	275211521013		Spring	1		
7	212111510001		Bracket	1		
8	920201000002		Switch	1		
9	910100300039		Bolt	1		
10	910300100007		Nut	3		
11	212111510002		Pin	1		
12	910400100005		Flat Washer	1		
13	910400500005		Spring Washer	1		
14	910100300009		Bolt	1		
15	910600700026		Pin	1		
16	910600600026		Cotter Pin	1		
17	910400100007		Flat Washer	2		
18	910400500007		Spring Washer	2		
19	212111510006		Brake Pump	1		
20	910100300037		Bolt	2		

03 Brake Unit (213346011502)

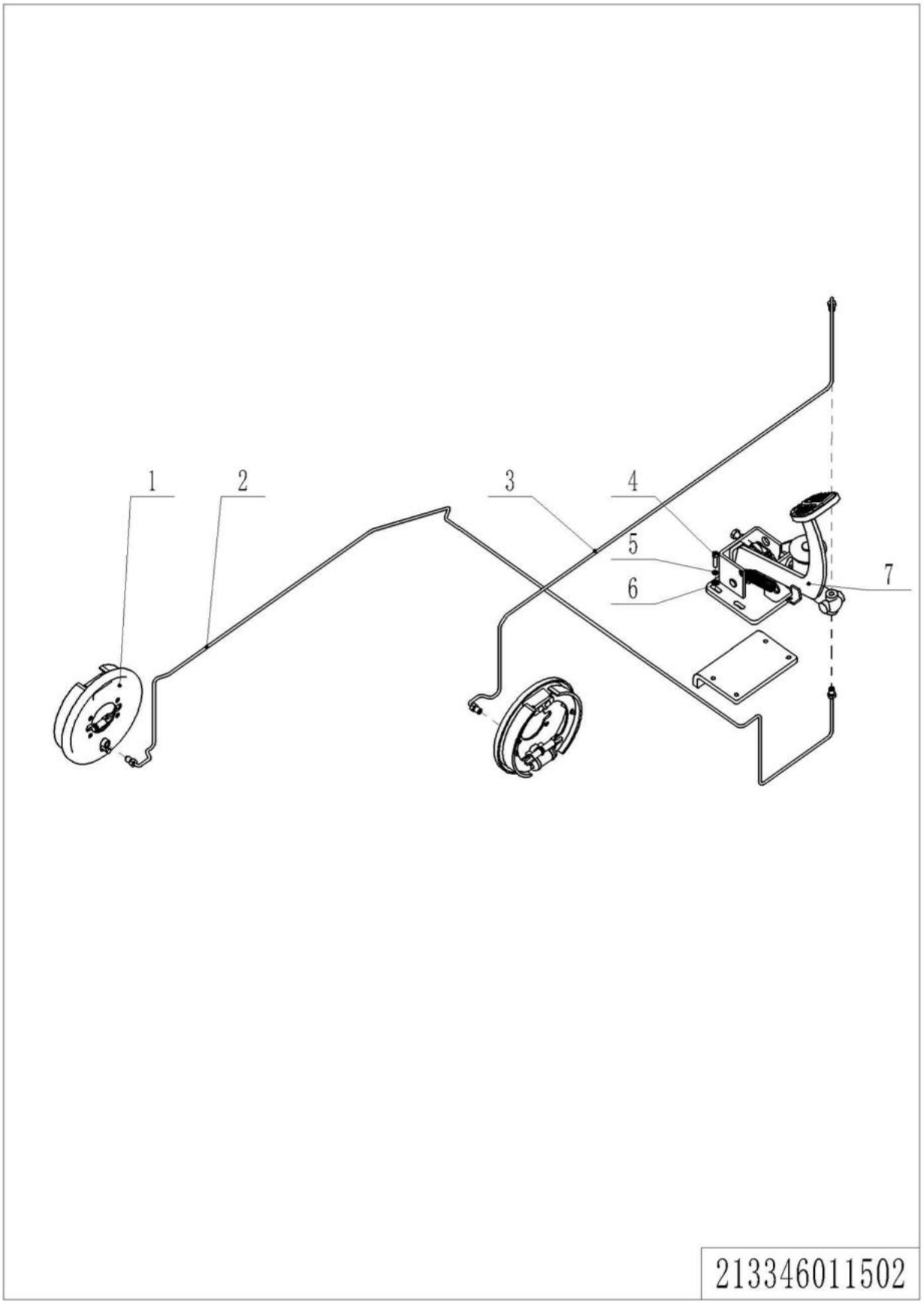

1= Supply as package. 2= Supply with constraints. 3= Phasing-out supply. 4= Supply as assembly. 5= Check other tables.

03 Brake Unit (213346011502)

No.	Item Code	Mark	Item Description	Qty.	Substitute	Note
1	940700200003		Brake	2		
2	213311510000		Steel Tube	1		
3	213311510001		Steel Tube	1		
4	910200200058		Screw	4		
5	910400500006		Spring Washer	4		
6	910400100006		Flat Washer	4		
7	212111510000		Foot Brake Assembly	1		

04 Load Wheel (213346017001)

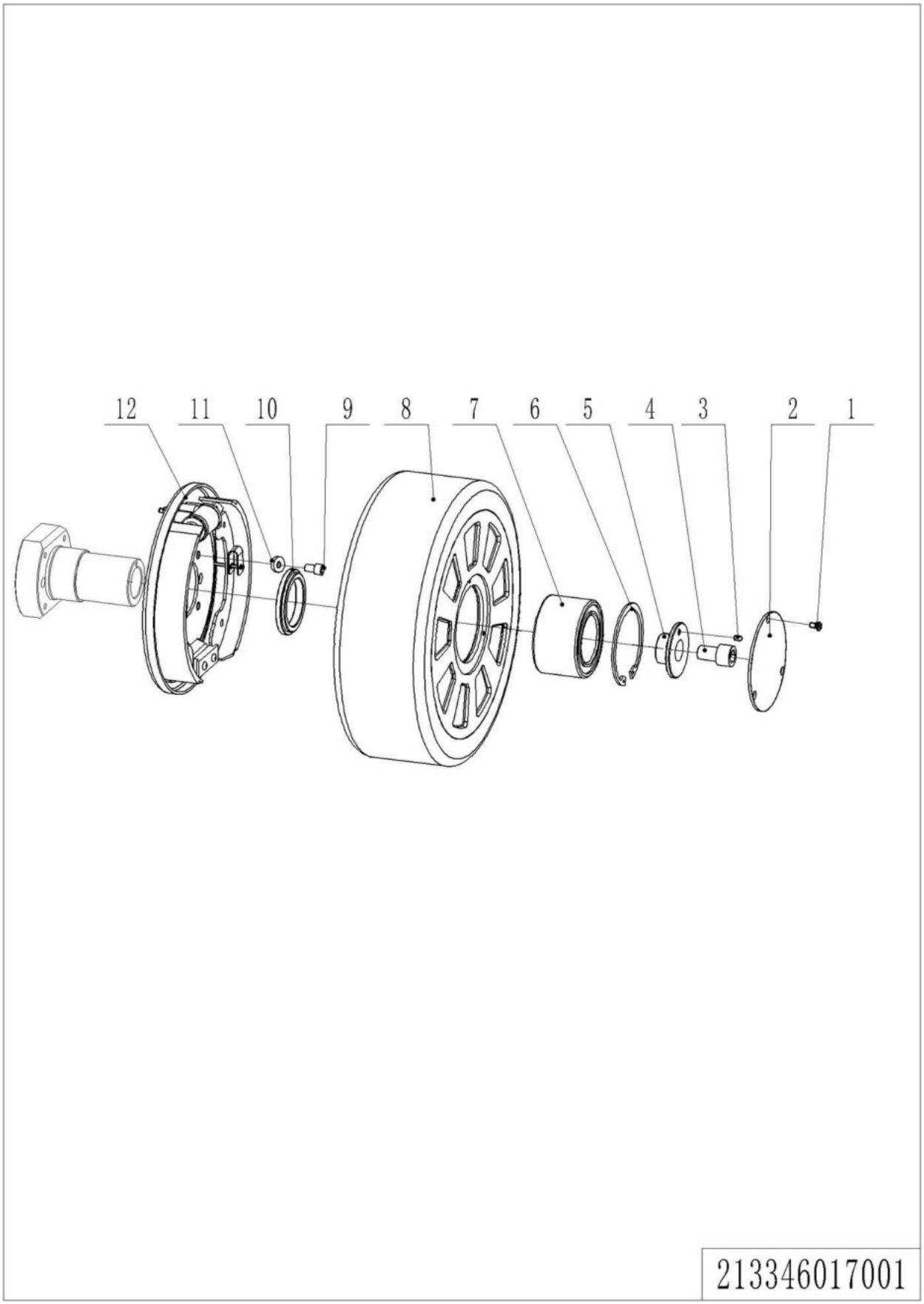

1= Supply as package. 2= Supply with constraints. 3= Phasing-out supply. 4= Supply as assembly. 5= Check other tables.

04 Load Wheel (213346017001)

No.	Item Code	Mark	Item Description	Qty.	Substitute	Note
1	910200600016		Screw	3		
2	212117020000		Close Plate	1		
3	910600100009		Cylindrical Pin	1		
4	910202500001		Screw	1		
5	212117020002		Press Cover	1		
6	910401400024		Circlip	1		
7	941101000005		Bearing	1		
8	940300300036		WheelΦ330x140	1		
9	910100300022		Bolt	4		
10	212117020001		Washer	1		
11	910400100006		Flat Washer	4		
12	940700200003		Brake	2		

Chapter 6: Electrical Parts

01 Wire Harness (213346033001)

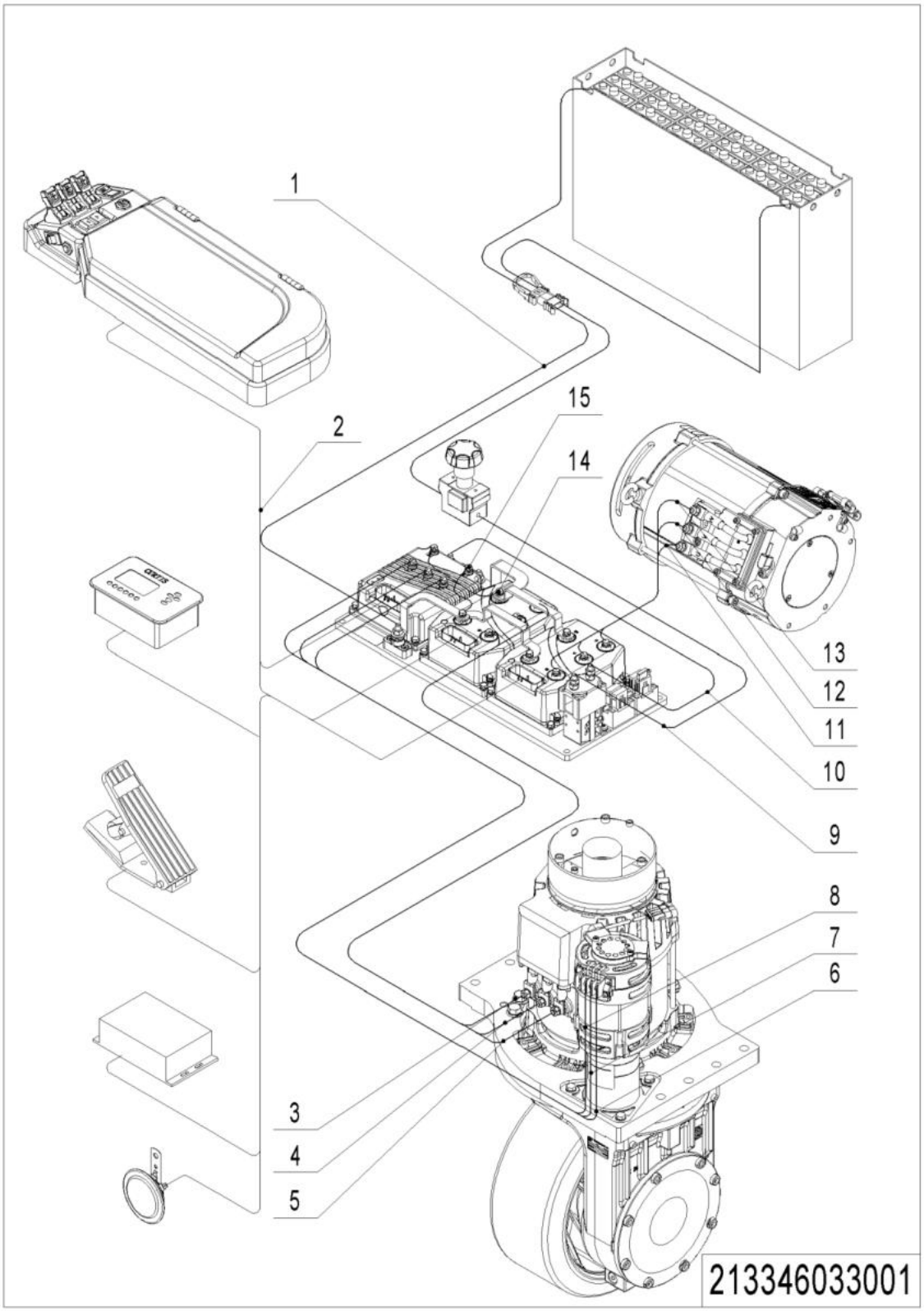

1= Supply as package. 2= Supply with constraints. 3= Phasing-out supply. 4= Supply as assembly. 5= Check other tables.

01 Wire Harness (213346033001)

No.	Item Code	Mark	Item Description	Qty.	Substitute	Note
1	212133010010		Wire Harness	1		
2	213333010000		Wire Harness	1		1232SE
2	213333010020		Wire Harness	1		F4A
2	213333010023		Wire Harness	1		EN1175-2020
3	212133010001		Cable	1		
4	212133010002		Cable	1		
5	212133010003		Cable	1		
6	212133010007		Cable	1		
7	212133010008		Cable	1		
8	212133010009		Cable	1		
9	212133010011		Cable	1		
10	212133010012		Cable	1		
11	212133010004		Cable	1		
12	212133010005		Cable	1		
13	212133010006		Cable	1		
14	213033010018		Cable	1		
15	213033010019		Cable	1		

02 Controller 1232SE (213346033002)

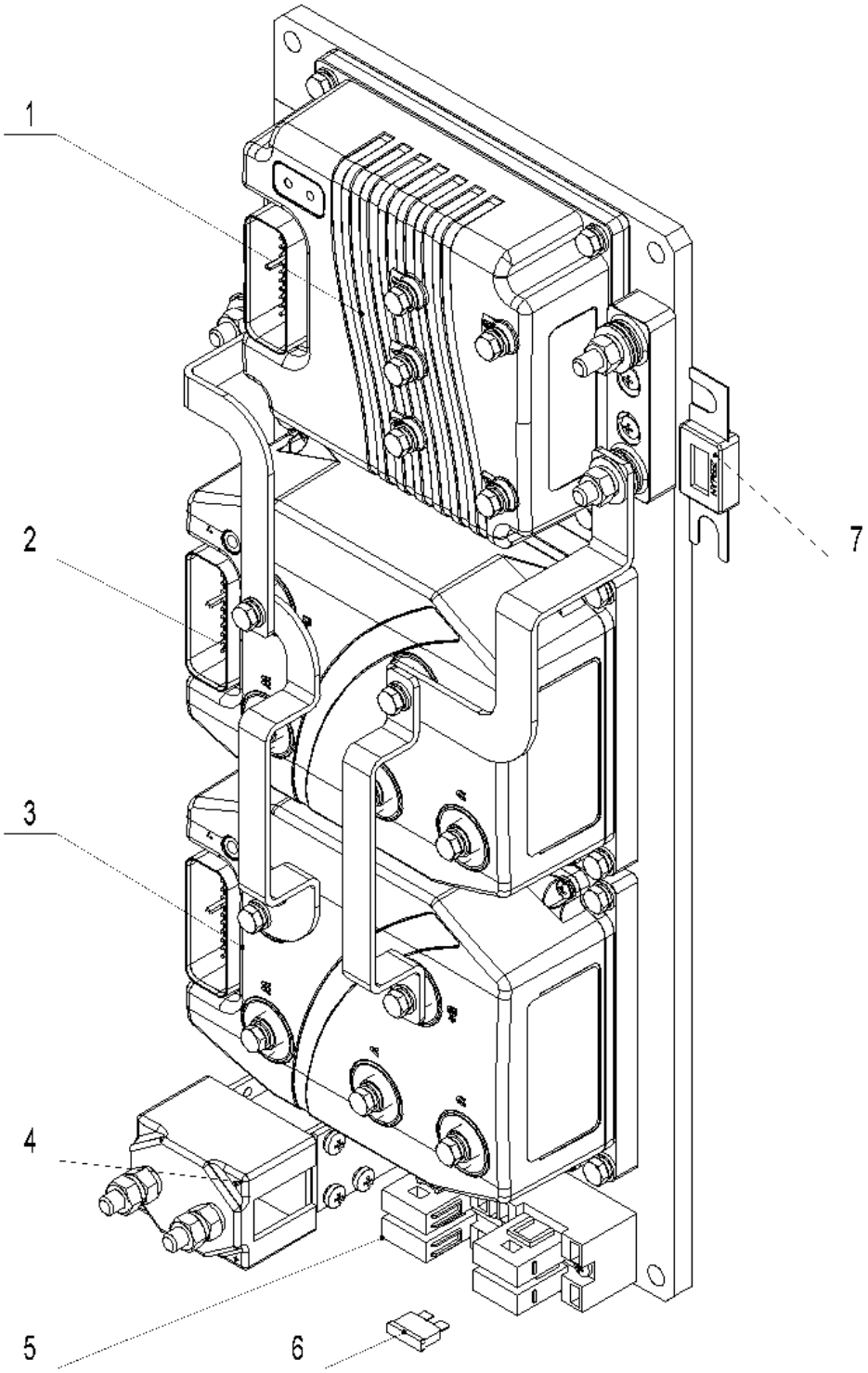

213346033002

1= Supply as package. 2= Supply with constraints. 3= Phasing-out supply. 4= Supply as assembly. 5= Check other tables.

02 Controller 1232SE (213346033002)

No.	Item Code	Mark	Item Description	Qty.	Substitute	Note
1	921400100004		Controller	1		
2	921400100043		Controller	1		
3	921400100042		Controller	1		
4	920700100008		Contactor	1		
5	920100400004		Fuse Holder	1		
6	920100200002		Fuse	1		
7	920100100014		Fuse	1		

03 Controller F4A (213346033004)

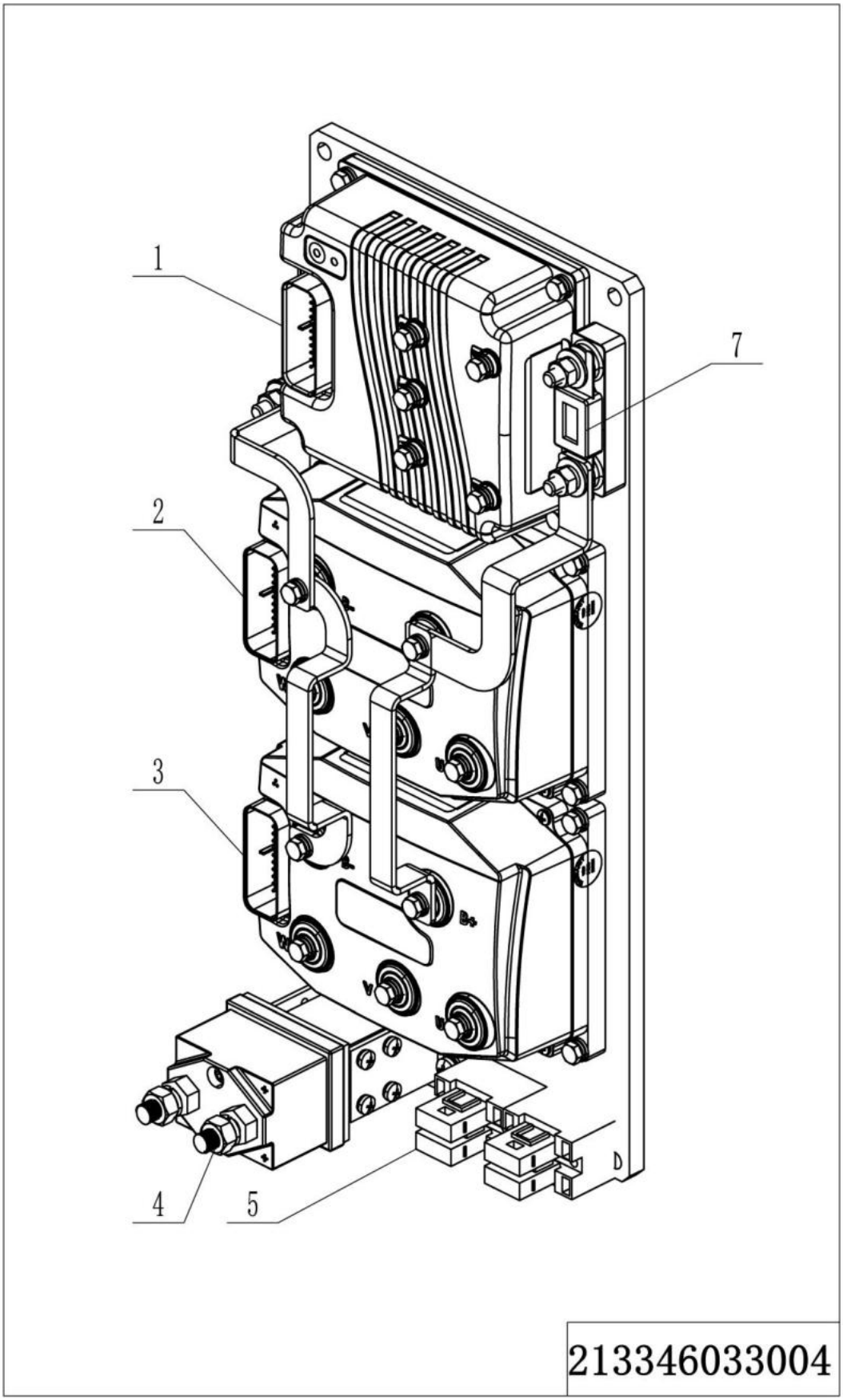

1= Supply as package. 2= Supply with constraints. 3= Phasing-out supply. 4= Supply as assembly. 5= Check other tables.

03 Controller F4A (213346033004)

No.	Item Code	Mark	Item Description	Qty.	Substitute	Note
1	921400100004		Controller	1		
2	921400100156		Controller	1		
3	921400100157		Controller	1		
4	920700100005		Contactor	1		
5	920100400004		Fuse Holder	2		
6	920100200002		Fuse	4		
7	920100100014		Fuse	1		

04 Charger (213346036501)

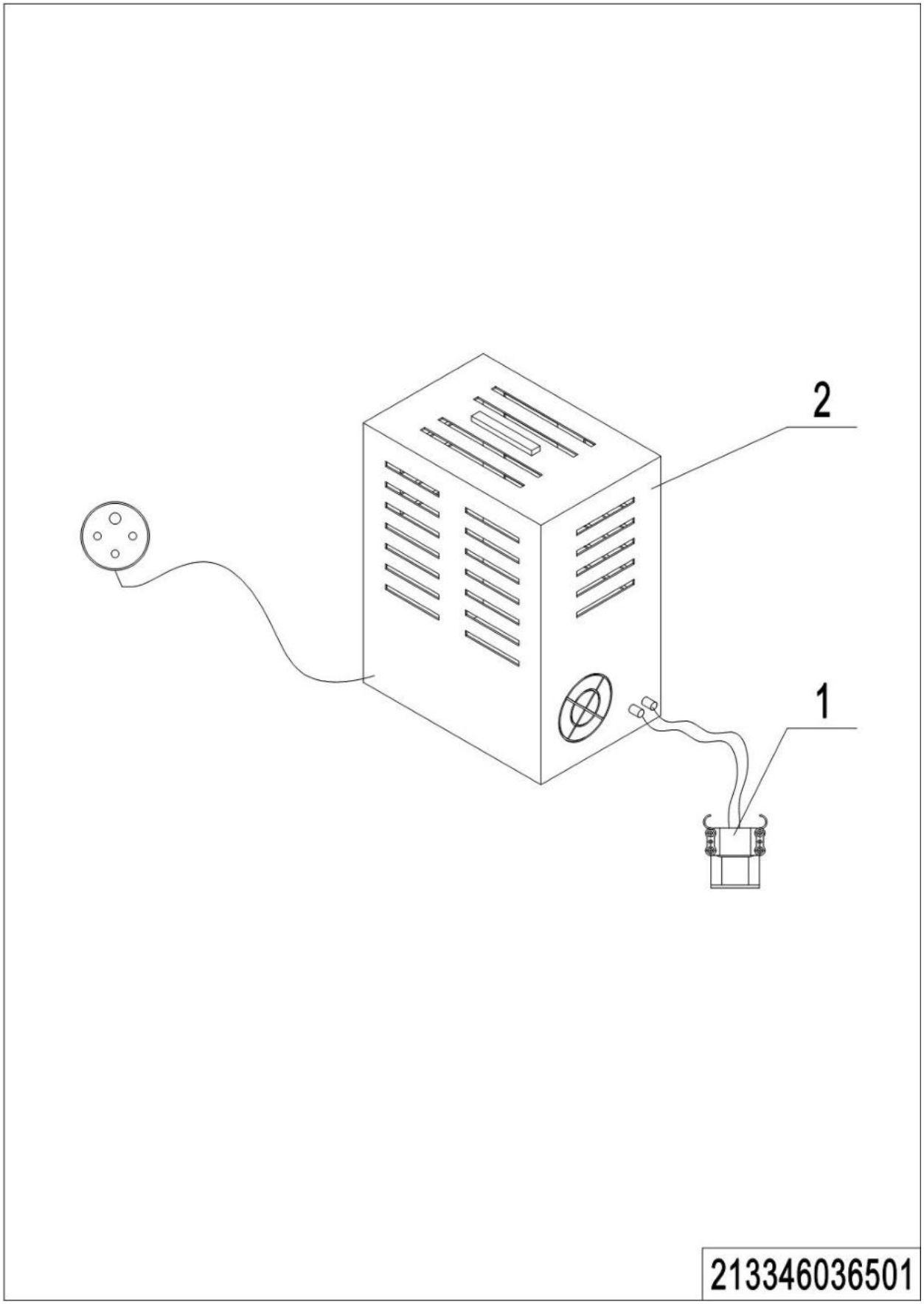

1= Supply as package. 2= Supply with constraints. 3= Phasing-out supply. 4= Supply as assembly. 5= Check other tables.

04 Charger (213346036501)

No.	Item Code	Mark	Item Description	Qty.	Substitute	Note
1	920400100033		Connector	1		Lead Acid
1	920400100037		Connector	1		Lithium
2	921000200097		Charger48V100A(Aisa-CHN)	1		Lead Acid
2	921000200098		Charger48V100A(Aisa-ENG)	1		Lead Acid
2	921000200099		Charger48V100A(EU)	1		Lead Acid
2	921000200100		Charger48V100A(ENG)	1		Lead Acid
2	921000200101		Charger48V100A(AUS)	1		Lead Acid
2	921000200102		Charger48V100A(USA)	1		Lead Acid
2	921000200610		Charger48V100A（ITA）	1		Lead Acid
2	921000200401		Charger48V200A(Aisa-CHN)	1		Lithium
2	921000200481		Charger48V200A(EU)	1		Lithium
2	921000200697		Charger48V200A(USA)	1		Lithium
2	921000200645		Charger48V120A(Aisa-ENG)	1		Lead Acid
2	921000200406		Charger48V150A(Aisa-CHN)	1		Lithium
2	921000200451		Charger48V150A(EU)	1		Lithium
2	921000200712		Charger48V150A(AUS)	1		Lithium
2	921000200696		Charger48V150A(USA)	1		Lithium
2	921000200719		Charger48V150A(EU)	1		Lithium
2	921000200773		Charger48V150A(AUS)	1		Lithium
2	921000200771		Charger48V150A(Aisa-ENG)	1		Lithium
2	921000200772		Charger48V150A(USA)	1		Lithium
2	921000200774		Charger48V150A(USA)	1		Lithium
2	921000200720		Charger48V200A(USA)	1		Lithium
2	921000200775		Charger48V200A(Aisa-ENG)	1		Lithium
2	921000200702		Charger48V200A(USA)	1		Lithium
2	921000200721		Charger48V200A(EU)	1		Lithium
2	921000200713		Charger48V200A(AUS)	1		Lithium
2	921000200776		Charger48V200A(AUS)	1		Lithium
2	921000200777		Charger48V200A(USA)	1		Lithium
2	921000200778		Charger48V200A(USA)	1		Lithium

Chapter 7: Special Parts

01 Battery Holder (213346012501)

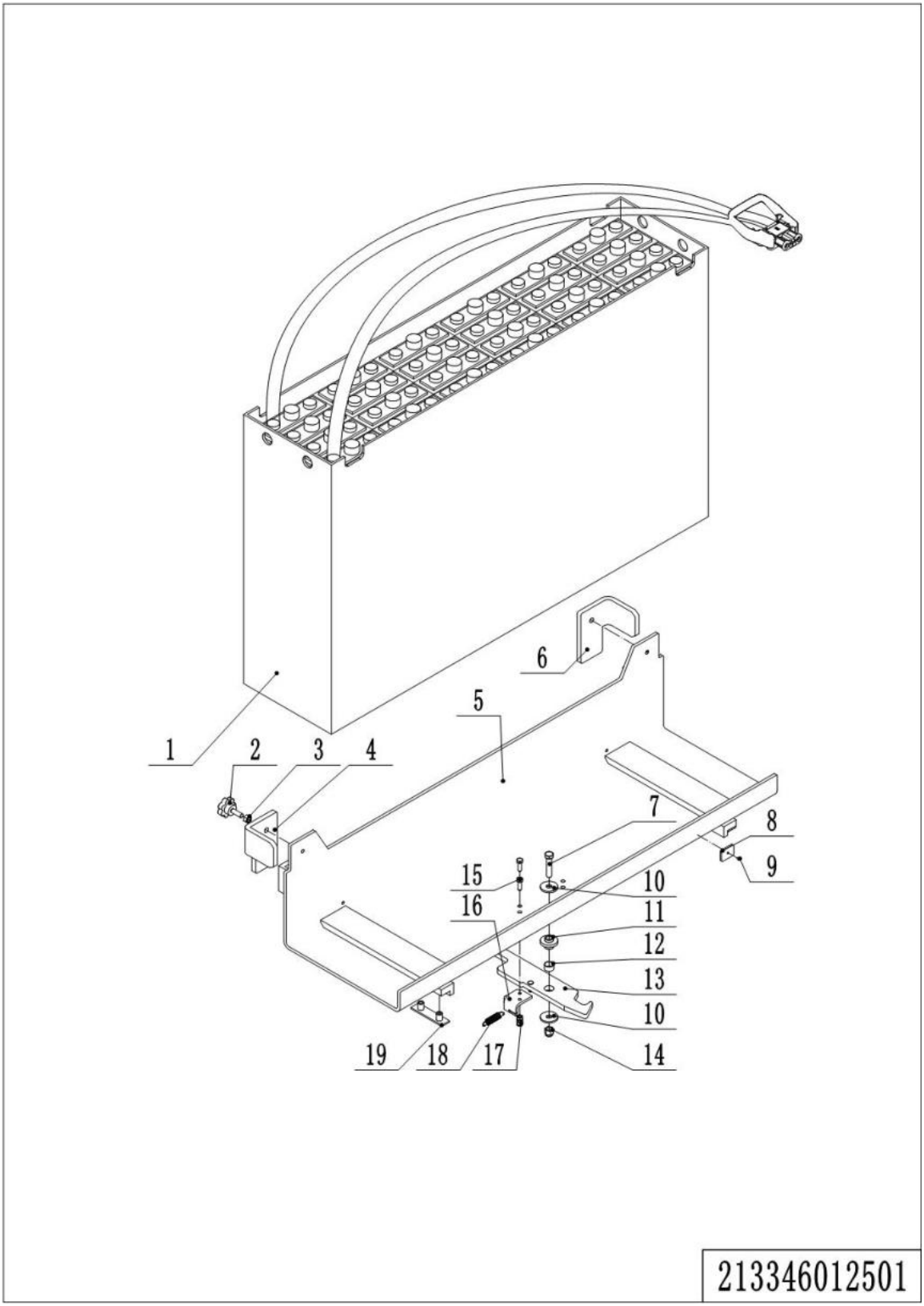

1= Supply as package. 2= Supply with constraints. 3= Phasing-out supply. 4= Supply as assembly. 5= Check other tables.

01 Battery Holder (213346012501)

No.	Item Code	Mark	Item Description	Qty.	Substitute	Note
1	213337010000		Battery48V700Ah(welded)	1		
1	213337010001		Battery48V700Ah	1		
1	213337040000		Battery48V700Ah	1		
1	920600100169		Li Battery48V400Ah	1		
1	920600100290		Li Battery48V400Ah	1		
1	920600100291		Li Battery48V400Ah	1		
1	920600100368		Li Battery48V554Ah	1		
1	920600100369		Li Battery48V554Ah	1		
1	920600100481		Battery48V700Ah	1		
1	920600100562		Battery48V700Ah	1		
1	920600100563		Battery48V945Ah	1		
1	920600100482		Battery48V945Ah	1		
1	920600100555		Battery48V560Ah	1		
2	911000300002		Handle	2		
3	910300100007		Nut	2		
4	213012520303		Stop Block	1		
5	213312510000		Battery Rack	1		
6	213012520304		Stop Block	1		
7	910100300055		Bolt	1		
8	255021020068		Crash Pad	2		
9	910200400014		Screw	2		
10	213012520009		Washer	2		
11	213012520008		Bracket	1		
12	940500100012		Bushing	1		
13	213312510011		Pothook	1		
14	910300500006		Nut	1		
15	910100300023		Bolt	2		
16	213012520005		Plate	1		
17	910300500004		Nut	2		
18	213012520006		Spring	1		
19	255044020131		Subplate	4		

1= Supply as package. 2= Supply with constraints. 3= Phasing-out supply. 4= Supply as assembly. 5= Check other tables.

02 Monitor (213346036001)

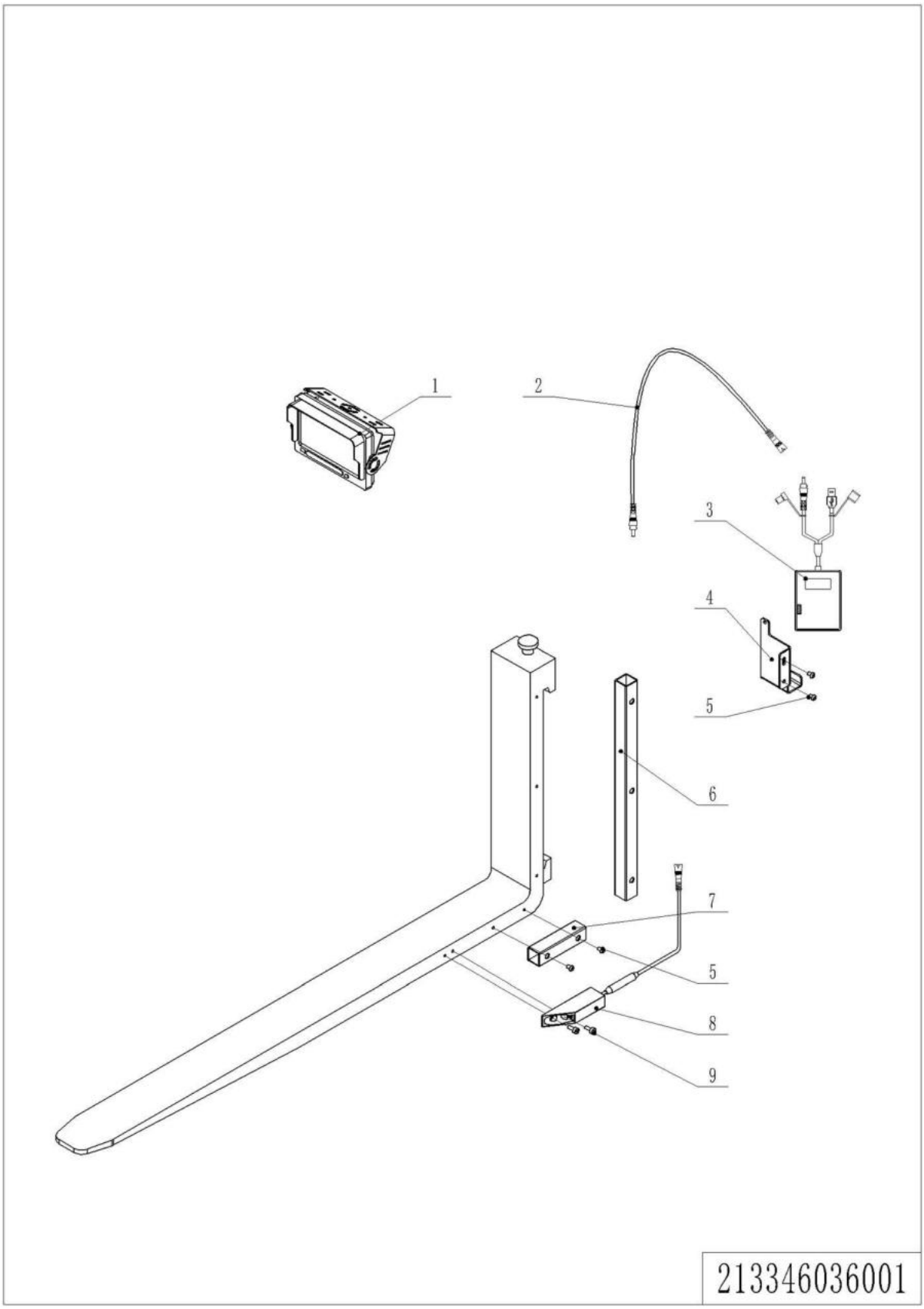

1= Supply as package. 2= Supply with constraints. 3= Phasing-out supply. 4= Supply as assembly. 5= Check other tables.

02 Monitor (213346036001)

No.	Item Code	Mark	Item Description	Qty.	Substitute	Note
1	921100100058		Display	1		
2	921500100110		Wire	1		
3	920600100384		Li Battery3.7V30000mAh	1		
4	212136020010		Mounting Bracket	1		
5	910200300017	1	Screw	7		
6	212136020002		Conduit	1		
7	212136020001		Conduit	1		
8	921100100059		Camera	1		
9	910200200033	1	Screw	2		

03 Monitor(Wired power) (213346036002)

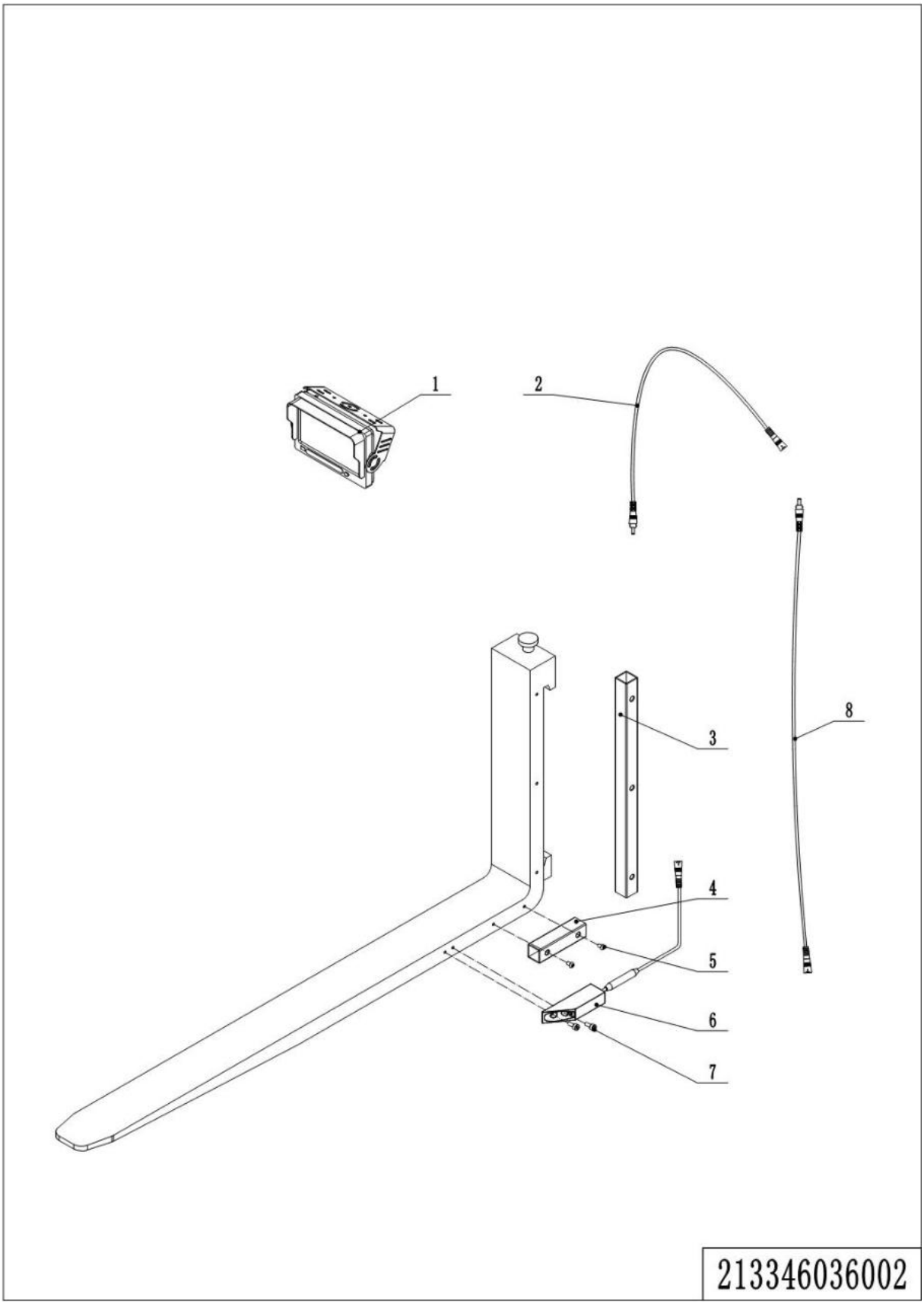

1= Supply as package. 2= Supply with constraints. 3= Phasing-out supply. 4= Supply as assembly. 5= Check other tables.

03 Monitor(Wired power) (213346036002)

No.	Item Code	Mark	Item Description	Qty.	Substitute	Note
1	921100100058		Display	1		
2	921500100110		Wire	1		
3	212136020002		Conduit	1		
4	212136020001		Conduit	1		
5	910200300017		Screw	7		
6	921100100059		Camera	1		
7	910200200033		Screw	2		
8	/		Wire	1		

04Height Preselection System (212146066501)

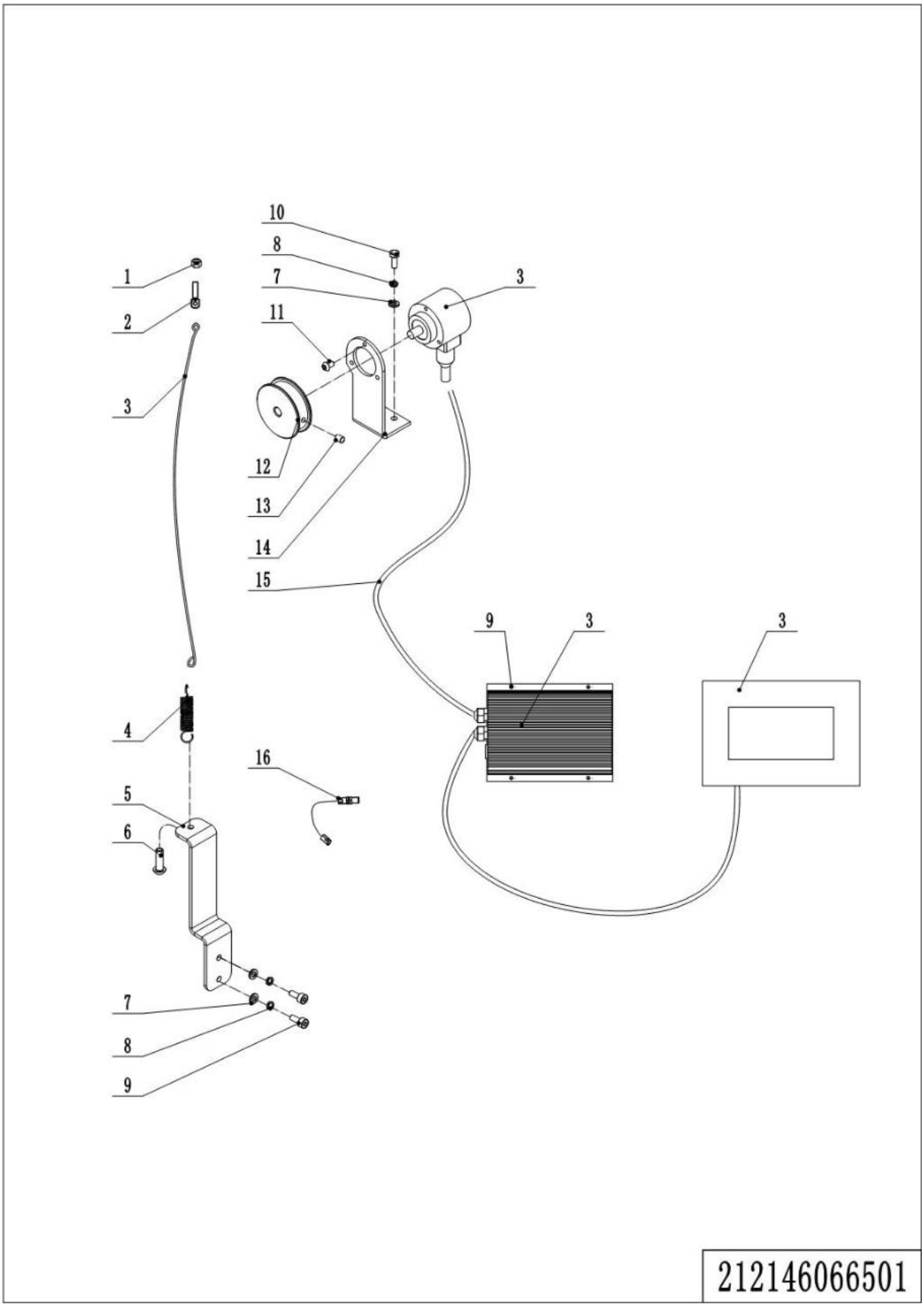

1= Supply as package. 2= Supply with constraints. 3= Phasing-out supply. 4= Supply as assembly. 5= Check other tables.

04Height Preselection System(212146066501)

No.	Item Code	Mark	Item Description	Qty.	Substitute	Note
1	910300100005	1	Nut	1		
2	212166520001		Screw	1		
3	922200100021		Height Preselection System	1		
4	213012520006		Spring	1		
5	212166520004		Fixing Plate	1		
6	941100800001		Pin	1		
7	910400100005	1	Flat Washer	10		
8	910400500005	1	Spring Washer	10		
9	910200200033	1	Screw	6		
10	910100300009	1	Bolt	4		
11	910200500022	1	Screw	3		
12	212166520002		Pulley	1		
13	910201000005	1	Screw	1		
14	212166520003		Mounting Plate	1		
15	213133010002		Wire Harness	1		4500
15	213133010003		Wire Harness	1		5000
15	213133010004		Wire Harness	1		5500
15	213133010005		Wire Harness	1		6000
15	213133010006		Wire Harness	1		6500
15	213133010007		Wire Harness	1		7000
15	213133010008		Wire Harness	1		7500
15	213133010009		Wire Harness	1		8000
15	213133010010		Wire Harness	1		8500
15	213133010011		Wire Harness	1		9000
15	213133010012		Wire Harness	1		9500
16	212133510008		Proximity Switch	1		

1= Supply as package. 2= Supply with constraints. 3= Phasing-out supply. 4= Supply as assembly. 5= Check other tables.

Chapter 8: Others

01 Control Panel (213346010001)

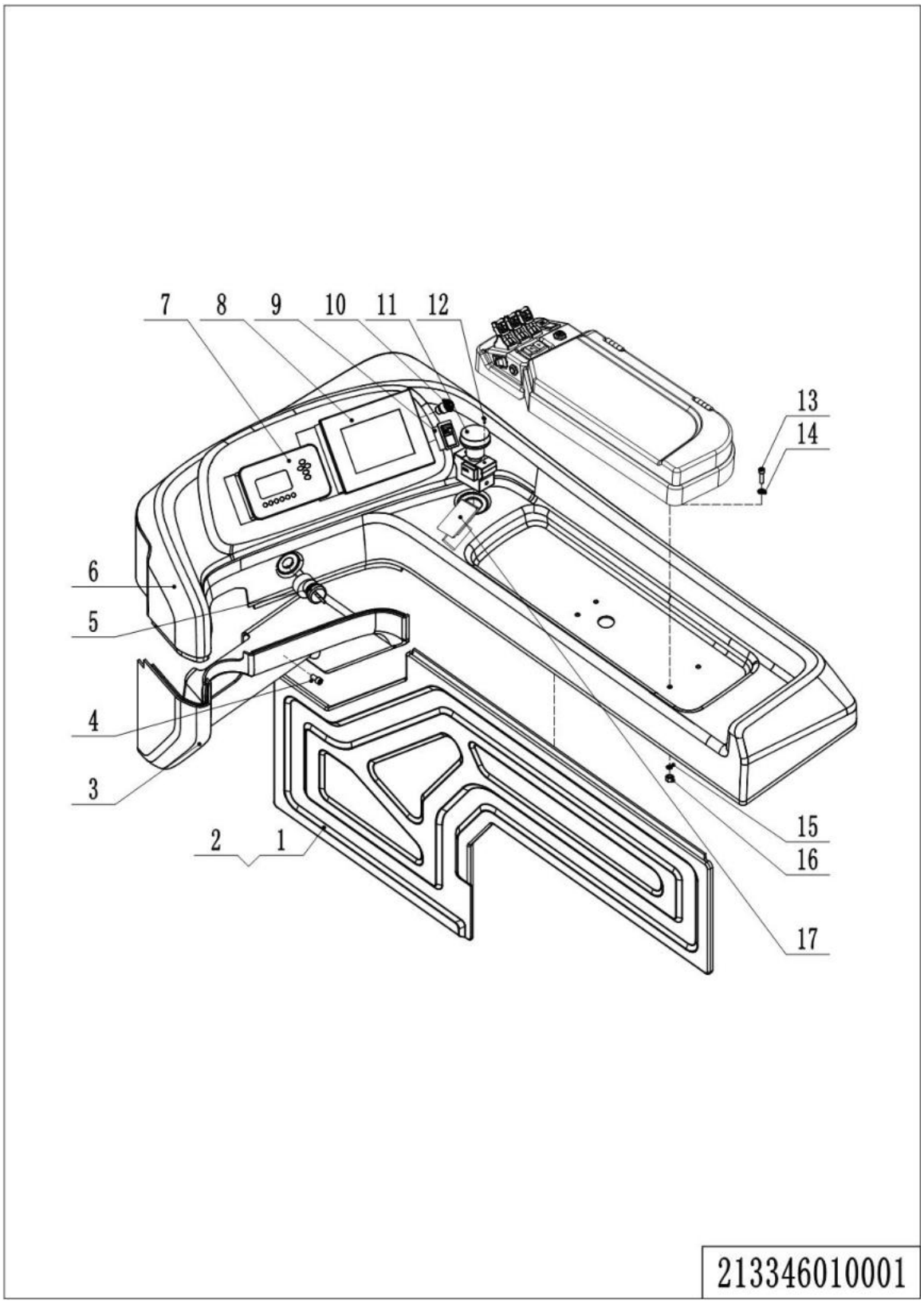

1= Supply as package. 2= Supply with constraints. 3= Phasing-out supply. 4= Supply as assembly. 5= Check other tables.

01 Control Panel (213346010001)

No.	Item Code	Mark	Item Description	Qty.	Substitute	Note
1	212110020025		Side Plate	1		
2	910200500052	1	Screw	10		
3	212110020001		Close Plate	1		
4	910200300017	1	Screw	1		
5	920200200002		Key Switch	1		
6	212110020026		Protective Cover	1		
6	212110020026		Protective Cover	1		
6	212110020030		Protective Cover	1		Height Preselection
7	921100100011		Display	1		1232SE
7	921100100063		Display	1		F4A
8	/	5	/	1		
9	920200800009		Rocker Switch	1		
10	212133510012		Button	1		
11	920200100005		Emergency Button	1		
12	910200300013	1	Screw	2		
13	910200200036	1	Screw	4		
14	910400100005	1	Flat Washer	4		
15	910400500005	1	Spring Washer	4		
16	910300100005	1	Nut	4		
17			Password lock	1		

1= Supply as package. 2= Supply with constraints. 3= Phasing-out supply. 4= Supply as assembly. 5= Check other tables.

02 Integrated Control Console (213346010002)

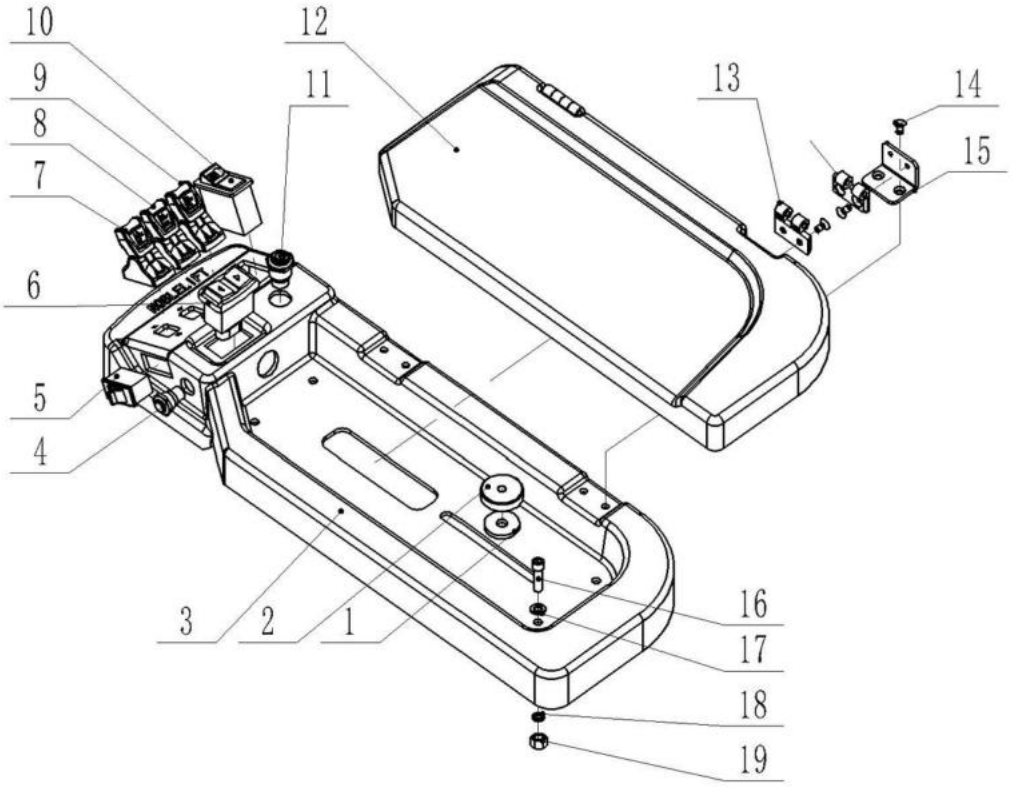

213346010002

1= Supply as package. 2= Supply with constraints. 3= Phasing-out supply. 4= Supply as assembly. 5= Check other tables.

02 Integrated Control Console (213346010002)

No.	Item Code	Mark	Item Description	Qty.	Substitute	Note
1	212110020010		Washer	1		
2	212110020028		Handle	1		
3	212110020003		Protective Cover	1		
4	920200700003		Switch	1		
5	212133510017		Switch	1		Shift FW./ BW.
5	213133510005		Switch	1		Shift FW./ BW. (two-way)
6	920200800040		Rocker Switch	1		
7	212133510014		Switch	1		Lift/ Lower（100mm）
7	212133510020		Switch	1		Lift/ Lower（160mm）
7	213133510002		Switch	1		Lift/ Lower(two-way)
8	212133510015		Switch	1		Move FW./ BW. （100mm）
8	212133510021		Switch	1		Move FW./ BW. （160mm）
8	213133510003		Switch	1		Move FW./ BW. (two-way)
9	212133510016		Switch	1		Tilt Up/ Down（100mm）
9	212133510022		Switch	1		Tilt Up/ Down（160mm）
9	213133510004		Switch	1		Tilt Up/ Down(two-way)
10	920200800008		Rocker Switch	1		
11	212133510013		Button	1		
12	212110010000		Cover	1		
13	940801300003		Hinge	2		
14	910200600016	1	Screw	12		
15	212110020004		Fixing Plate	2		
16	910200200036	1	Screw	4		
17	910400100005	1	Flat Washer	4		
18	910400500005	1	Spring Washer	4		
19	910300100005	1	Nut	4		

1= Supply as package. 2= Supply with constraints. 3= Phasing-out supply. 4= Supply as assembly. 5= Check other tables.

03 Adjustable Console Support (213346010003)

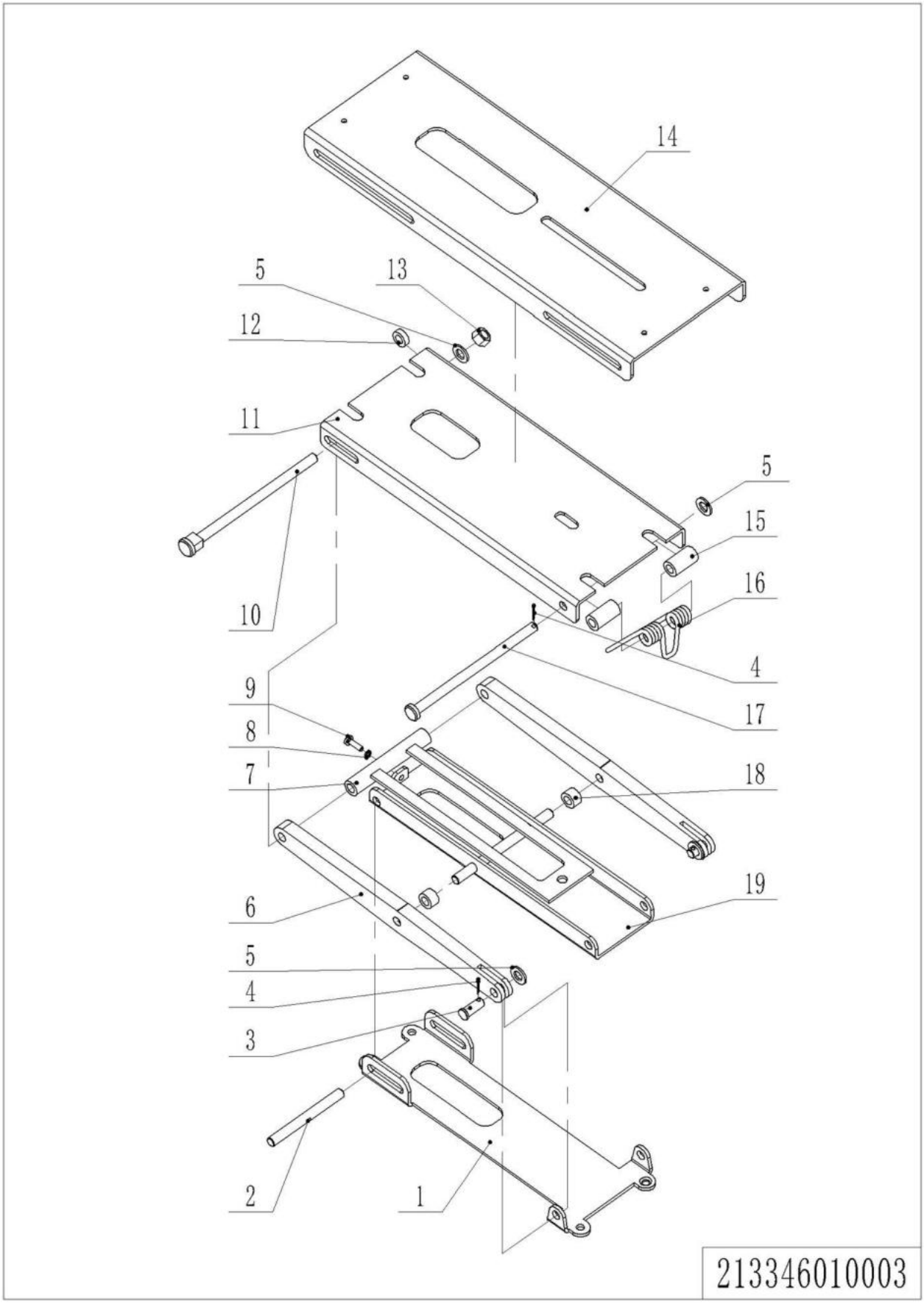

1= Supply as package. 2= Supply with constraints. 3= Phasing-out supply. 4= Supply as assembly. 5= Check other tables.

03 Adjustable Console Support (213346010003)

No.	Item Code	Mark	Item Description	Qty.	Substitute	Note
1	212110020012		Baseboard	1		
2	212110020008		Axle	1		
3	212110020016		Pin	2		
4	910600600026		Cotter Pin	3		
5	910400100006		Flat Washer	4		
6	212110020011		Fork Plate(outer)	2		
7	212110010001		Bracket	1		
8	910400500003		Spring Washer	1		
9	910200500022		Screw	1		
10	212110020007		Axle	1		
11	212110020006		Sliding Plate	1		
12	212110020009		Spacer Bush	1		
13	910300500004		Nut	1		
14	212110020005		Bracket	1		
15	212110020013		Spacer Bush	2		
16	212110020027		Torsional Spring	1		
17	212110020014		Pin	1		
18	212110020015		Spacer Bush	2		
19	212110010002		Fork Plate(inner)	1		

1= Supply as package. 2= Supply with constraints. 3= Phasing-out supply. 4= Supply as assembly. 5= Check other tables.

04 Labels and Decals (213346047001)

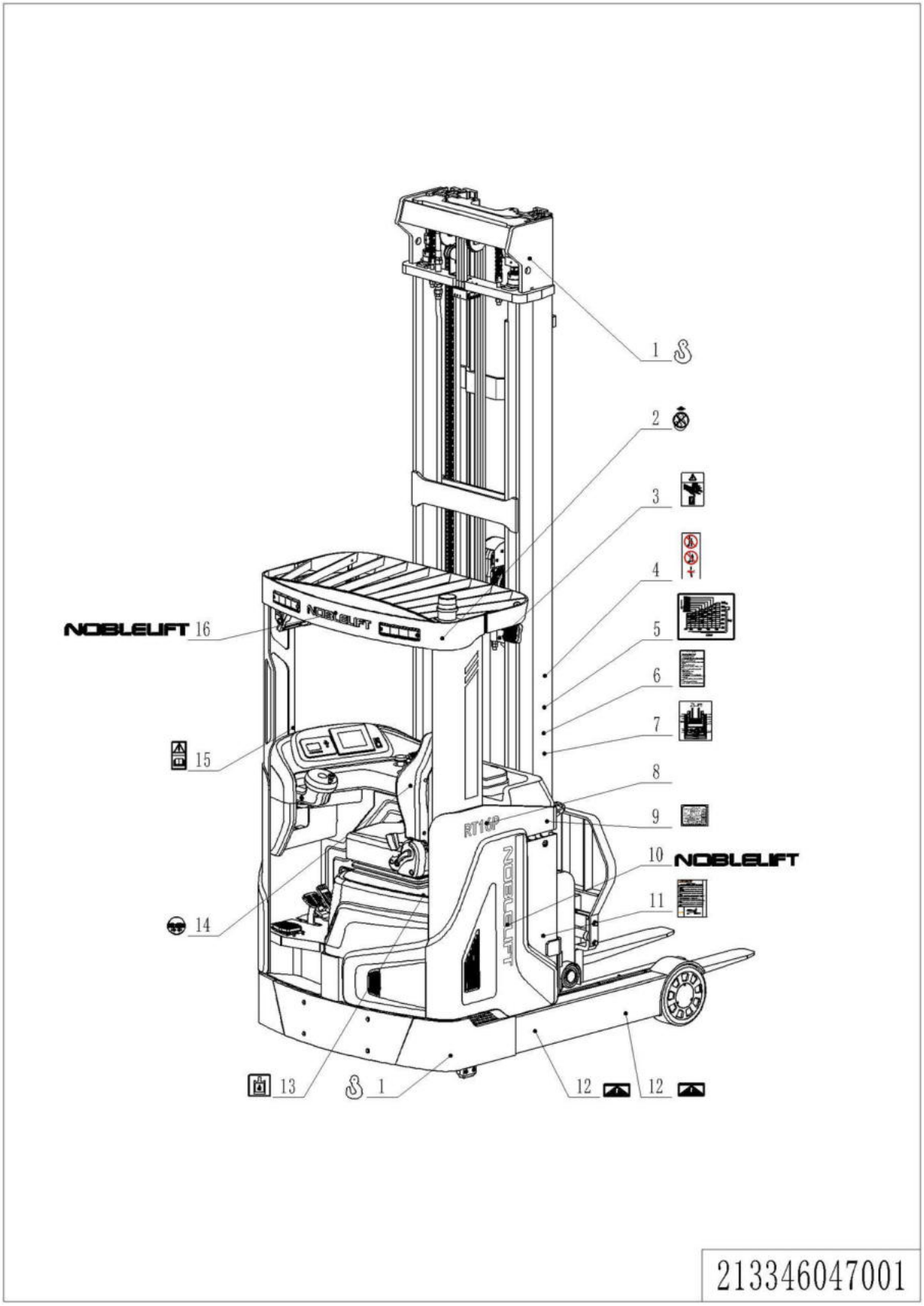

1= Supply as package. 2= Supply with constraints. 3= Phasing-out supply. 4= Supply as assembly. 5= Check other tables.

04 Labels and Decals (213346047001)

No.	Item Code	Mark	Item Description	Qty.	Substitute	Note
1	941200300001		Label	4		
2	941200100025		Label	2		
3	941200100027		Label	2		
4	941200100004		Label	2		
5	212147020016		Load Capacity Diagram	2		
6	212147020012		Label	1		
7	212147020010		Label,Lubrication	1		
8	213147020002		Label	1		
9	941200600003		Identification Plate	1		
10	212147020006		Label	1		
11	212147020011		Label	1		
12	255047020023		Label	4		
13	255047020004		Label	1		
14	255047020012		Label	1		
15	941200300011		Label	1		
16	212147020007		Label	1		

Appendix

01 Electrical Circuit Diagram 1232SE

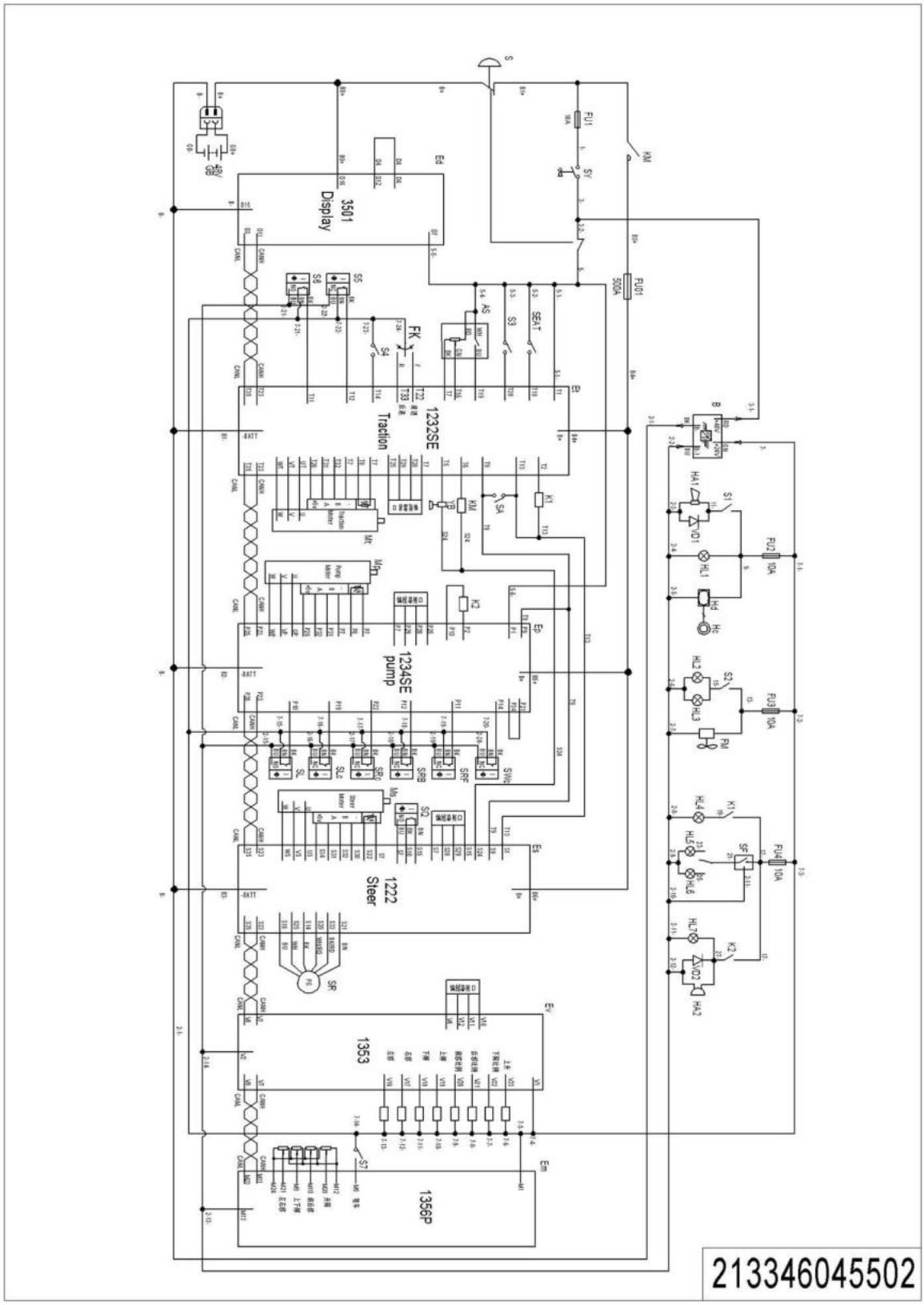

02 Electrical Circuit Diagram F4A

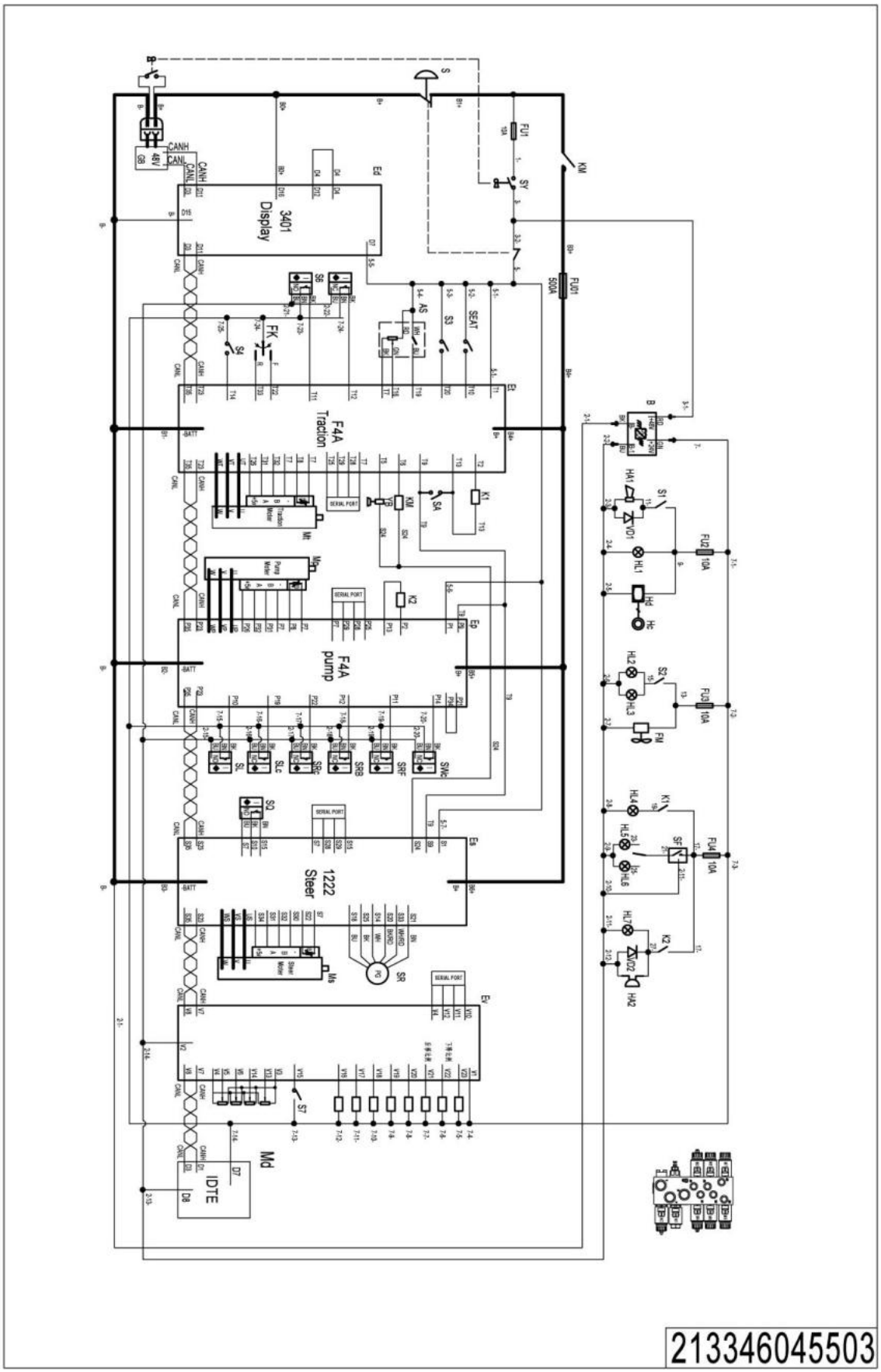

1= Supply as package. 2= Supply with constraints. 3= Phasing-out supply. 4= Supply as assembly. 5= Check other tables.

03 Electrical Circuit Diagram F4A(EN1175)

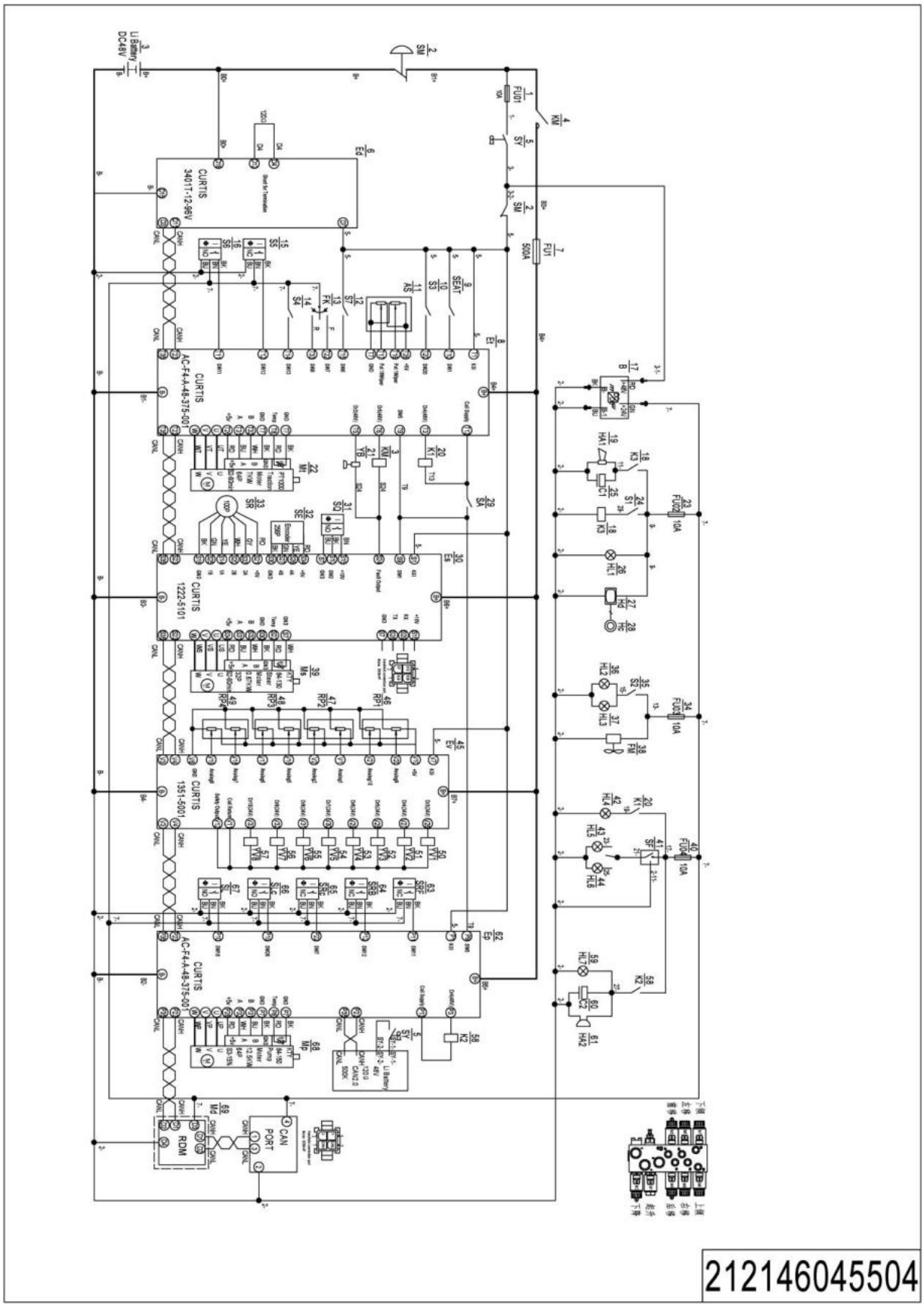

04 Hydraulic Circuit Diagram

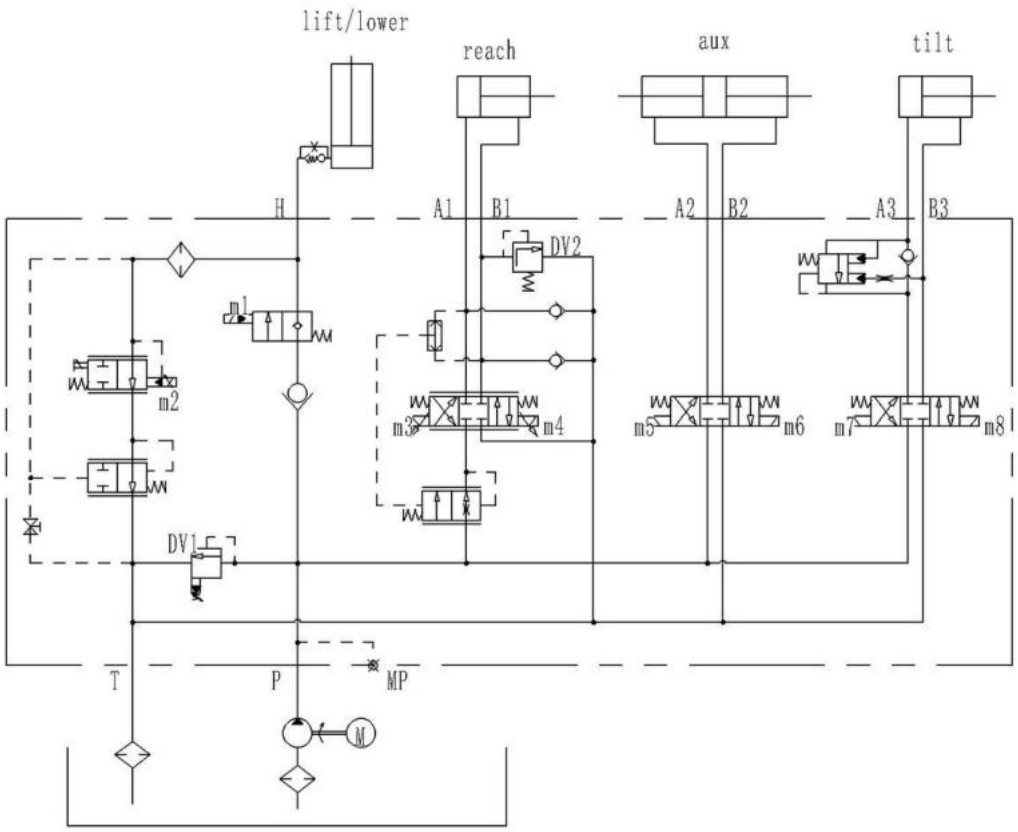

213346045502

05 Consumable Parts List

No.	Item Code	Item Description	Qty.	Chapter/ Section/ Number
1	940500100012	Bushing	1	Chapter 2/03/5.01
2	940500100016	Bushing	1	Chapter 4/06/17
3	940500100079	Bushing	20	Chapter 4/06/32
4	255044020131	Subplate	4	Chapter 7/01/19
5	940300300036	WheelΦ330x140	2	Chapter 5/04/08
6	940300400043	WheelΦ400x160	1	Chapter 1/01/20
7	213398520001	Seal Kit	2	Chapter 4/01/17.01
8	212198510003	Seal Kit	1	Chapter 4/03/15.01
9	212198510004	Seal Kit	1	Chapter 2/02/6.01
10	940500400013	Bearing	4	Chapter 4/05/11
11	910700200019	Bearing	4	Chapter 4/06/3
12	910700200004	Bearing	1	Chapter 5/11/12
13	212198510000	Seal Kit	2	Chapter 2/04/2.01

1= Supply as package. 2= Supply with constraints. 3= Phasing-out supply. 4= Supply as assembly. 5= Check other tables.