Print Number: Print Date:

NOBLELIFT

Scan QR Code for More

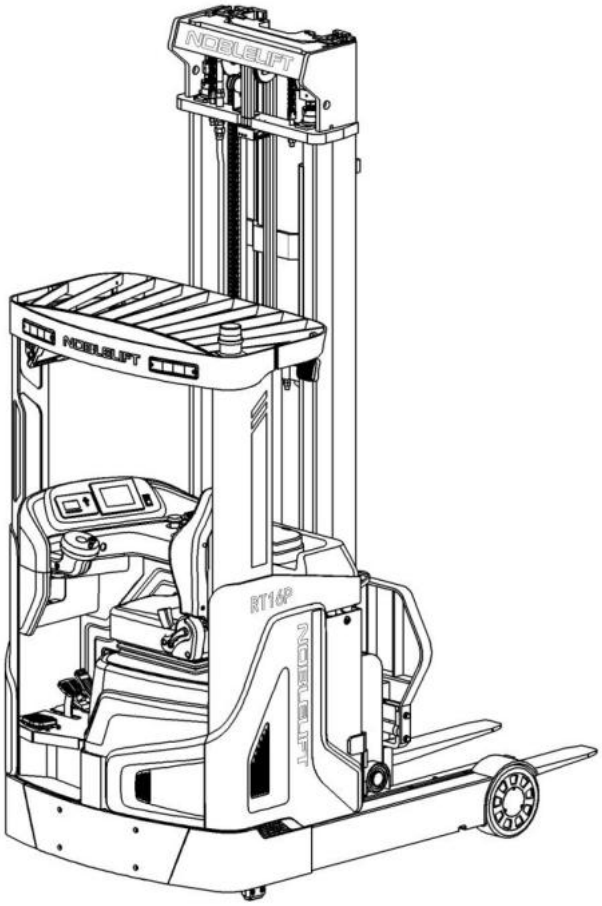

Reach Truck RT20P

PARTS MANUAL

213146020101

Version V05

Truck Identification Number From:

Parts Manual

RT20P-PM05EN

Please order spare parts from authorized dealers of Noblelift Intelligent Equipment Co., LTD.

In order to avoid wrong delivery, all the orders for spare parts should specify the following items:

- Truck model, identification number and manufacture year.
- Orders for spare parts of mast, hydraulic transmission unit, steering axle, motor, etc. shall indicate the manufacture number of these parts.
- Codes for Noblelift spare parts are shown in the table of parts manual. Please also pay attention to the description of supply status, order quantity, etc. (check the number listed in "Mark" column of the parts manual).

"Mark" Column:

The unmarked indicates the parts are in short supply cycle.

Number 1: supply as package. Indicating these that parts are small parts and seal parts, which are supplied in package unit and in short supply cycle.

Number 2: supply with constraints. Indicating that these spare parts are not in stock and will be prepared for production after receiving the order from customers, which are in long supply cycle.

Number 3: phasing-out supply. Indicating that these parts will be replaced by new parts due to technical improvements and the current stock will not be available when these parts run out. Please check the description of technical improvements notice.

Number 4: supply as assembly. Indicating that these parts are assembly parts defined by manufacture process, which cannot be supplied as a single part.

Number 5: check other tables.

This parts manual is the property of Noblelift and can be shared under the confidential agreement only, Noblelift has the right to claim for compensation of any unauthorized use. Copy without permission is not allowed. Figures in the manual are not limited by the original design. Noblelift Intelligent Equipment Co., LTD reserves the right to improve the products for continuous technology progress.

Table of Contents

Chapter 1：Drive System 1
01Drive Unit (212146013501) 1
02Drive Unit (EN1175-2020)(213146013551) 3
02Drive Unit (EN1175-2020)(213146013551) Continuation 5
03Lift Unit (212146032501) 7
Chapter 2：Hydraulic System 9
01Hydraulic Assembly(213146025001) 9
02Reach Cylinder(213146020001) 11
03Oil Tank(212146019001) 13
04Tilt Cylinder(212146020501) 15
Chapter 3：Truck Frame 17
01Chassis(213146021501) 17
01Chassis(213146021501)Continuation1 19
01Chassis(213146021501)Continuation2 21
02Handle Assembly(212146021502) 23
03Overhead Guard(212146022001) 25
04Platform(212146018001) 27
05Seat(212146037501) 29
Chapter 4：Mast 31
01Outer Mast(212146044501) 31
01Outer Mast(212146044501)Continuation1 33
01Outer Mast(212146044501)Continuation2 35
02 Middle Mast (212146044502) 37
03Inner Mast (212146044503) 39
03Inner Mast (212146044503)Continuation 41
04Reach Frame(213146044501) 43
04Reach Frame(213146044501)Continuation 45
05Fork Carriage(213146044502) 47
06Mast Hydraulic(212146044506) 49
06Mast Hydraulic(212146044506)Continuation1 51
06Mast Hydraulic(212146044506)Continuation2 53
06Mast Hydraulic(212146044506)Continuation3 55
Chapter 5：Steering System, Braking System, Wheels 57
01Steering Wheel(212146031501) 57
01Steering Wheel(212146031501)Continuation 59
02Brake Unit(213146011501) 61
03Brake Pedal(212146011502) 63
04Load Wheel(213146017001) 65
Chapter 6：Electrical Parts 67
01Wire Harness(213146033001) 67
02Controller(1232SE) (213346033002) 69
03Controller(F4A) (213346033003) 71

04 Charger (213146036501) 73
Chapter 7：Special Parts 75
01 Battery Holder (213146012501) 75
01 Battery Holder (213146012501) Continuation 77
02 Monitor (213346036001) 79
03 Monitor(Wired power) (213346036002) 81
04Height Preselection System (212146066501) 83
Chapter 8：Others 85
01Control Panel (212146010001) 85
02Integrated Control Console(212146010002) 87
03Adjustable Console Support(212146010003) 89
04Labels and Decals(213146047001) 91
Appendix 93
01Electrical Circuit Diagram(1232SE) 93
02Electrical Circuit Diagram(F4A) 94
03Electrical Circuit Diagram(F4A,EN1175-2020) 95
04Hydraulic Circuit Diagram 96
05Consumable Parts List 97

Chapter 1：Drive System

01Drive Unit (212146013501)

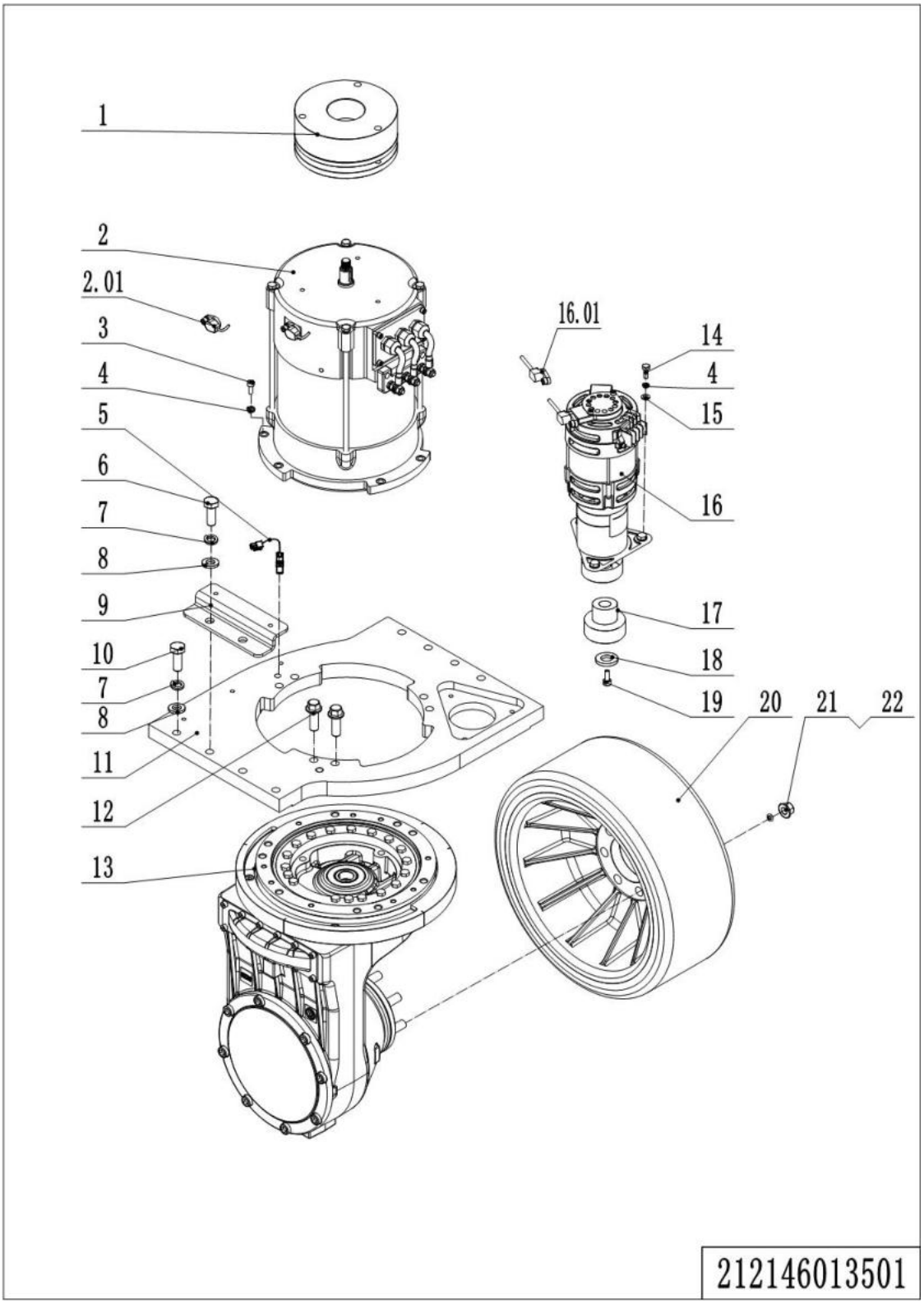

1= Supply as package. 2= Supply with constraints. 3= Phasing-out supply. 4= Supply as assembly. 5= Check other tables.

Print Number: Print Date:

01Drive Unit(212146013501)

No.	Item Code	Mark	Item Description	Qty.	Substitute	Note
1	940700100003		Brake	1		
2	920900100110		Motor	1		SCH
2	920900100143		Motor	1		
2.01	921800200011		Encoder	1		SCH
2.01	921800200037		Encoder	1		
3	910200200061		Screw	6		
4	910400500006		Spring Washer	10		
5	212133510010		Proximity Switch	1		
6	910100300096		Bolt	2		
7	910400500008		Spring Washer	8		
8	910400100008		Flat Washer	8		
9	212121520047		Fixing Plate	1		
10	910100300095		Bolt	7		
11	213021520224		Plate	1		
12	910100800003		Bolt	6		
13	941000100007		Gearbox	1		
14	910400100006		Flat Washer	3		
15	910100300023		Bolt	3		
16	940900800001		Steering Unit	1		
16.01	921800200012		Encoder	1		
17	940998520071		Gear	1		
18	213313520001		Washer	1		
19	910200200058		Screw	1		
20	940300400041		WheelΦ343x140	1		
21	940998520072		Nut	7		
22	940998520073		Spring Washer	7		

1= Supply as package. 2= Supply with constraints. 3= Phasing-out supply. 4= Supply as assembly. 5= Check other tables.

02Drive Unit (EN1175-2020)(213146013551)

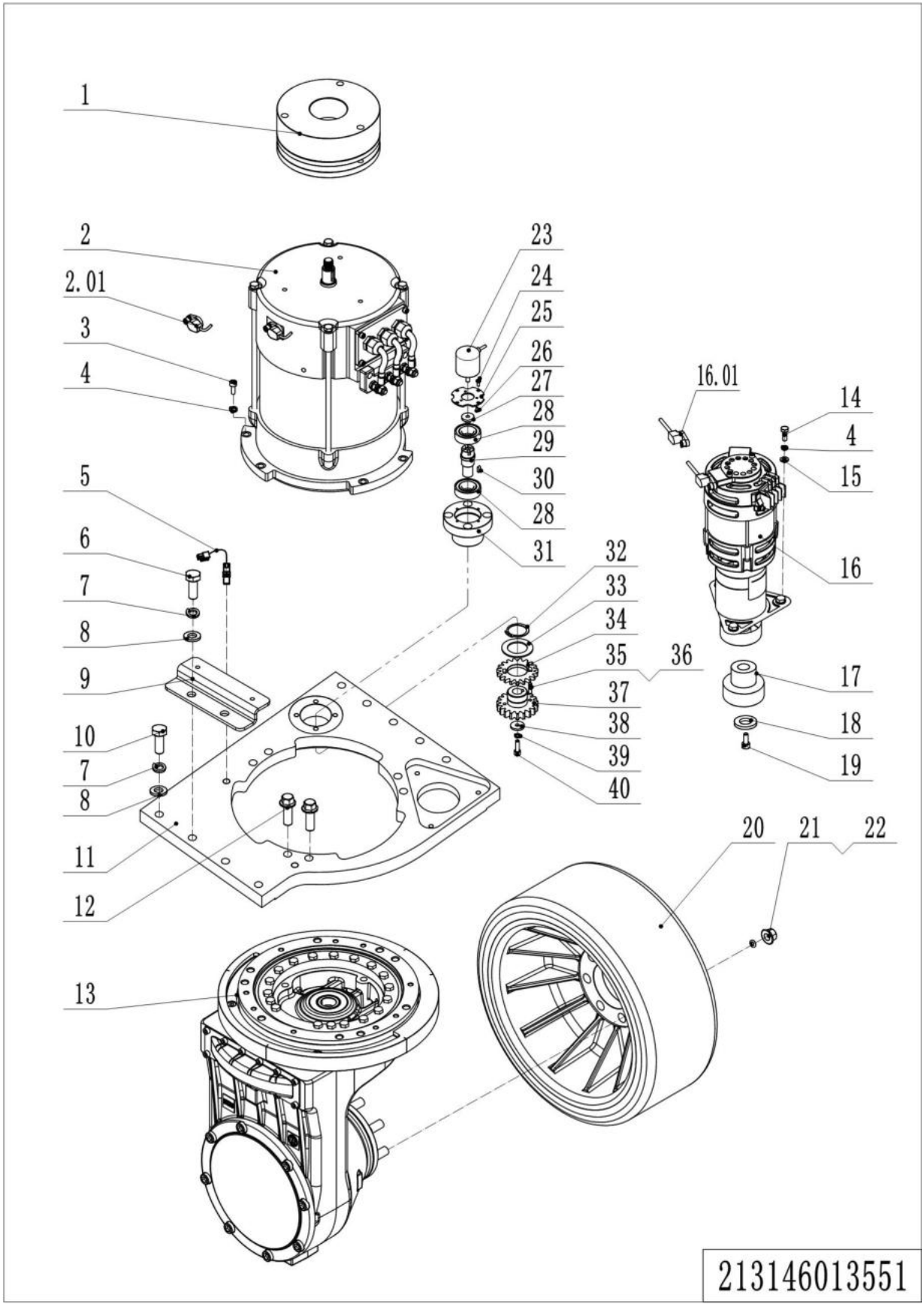

1= Supply as package. 2= Supply with constraints. 3= Phasing-out supply. 4= Supply as assembly. 5= Check other tables.

Print Number: Print Date:

02Drive Unit(EN1175-2020)(213146013551)

No.	Item Code	Mark	Item Description	Qty.	Substitute	Note
1	940700100003		Brake	1		
2	920900100110		Motor	1		SCH
2	920900100143		Motor	1		
2.01	921800200011		Encoder	1		SCH
2.01	921800200037		Encoder	1		
3	910200200061		Screw	6		
4	910400500006		Spring Washer	10		
5	212133510010		Proximity Switch	1		
6	910100300096		Bolt	2		
7	910400500008		Spring Washer	8		
8	910400100008		Flat Washer	8		
9	212121520047		Fixing Plate	1		
10	910100300095		Bolt	7		
11	213021520224		Plate	1		
12	910100800003		Bolt	6		
13	941000100007		Gearbox	1		
14	910400100006		Flat Washer	3		
15	910100300023		Bolt	3		
16	940900800001		Steering Unit	1		
16.01	921800200012		Encoder	1		
17	940998520071		Gear	1		
18	213313520001		Washer	1		
19	910200200058		Screw	1		
20	940300400041		WheelΦ343x140	1		
21	940998520072		Nut	7		
22	940998520073		Spring Washer	7		
23	921800200029		Encoder	1		
24	910200200013		Screw	4		
25	212113520001		Mounting Plate	1		

1= Supply as package. 2= Supply with constraints. 3= Phasing-out supply. 4= Supply as assembly. 5= Check other tables.

02Drive Unit (EN1175-2020)(213146013551) Continuation

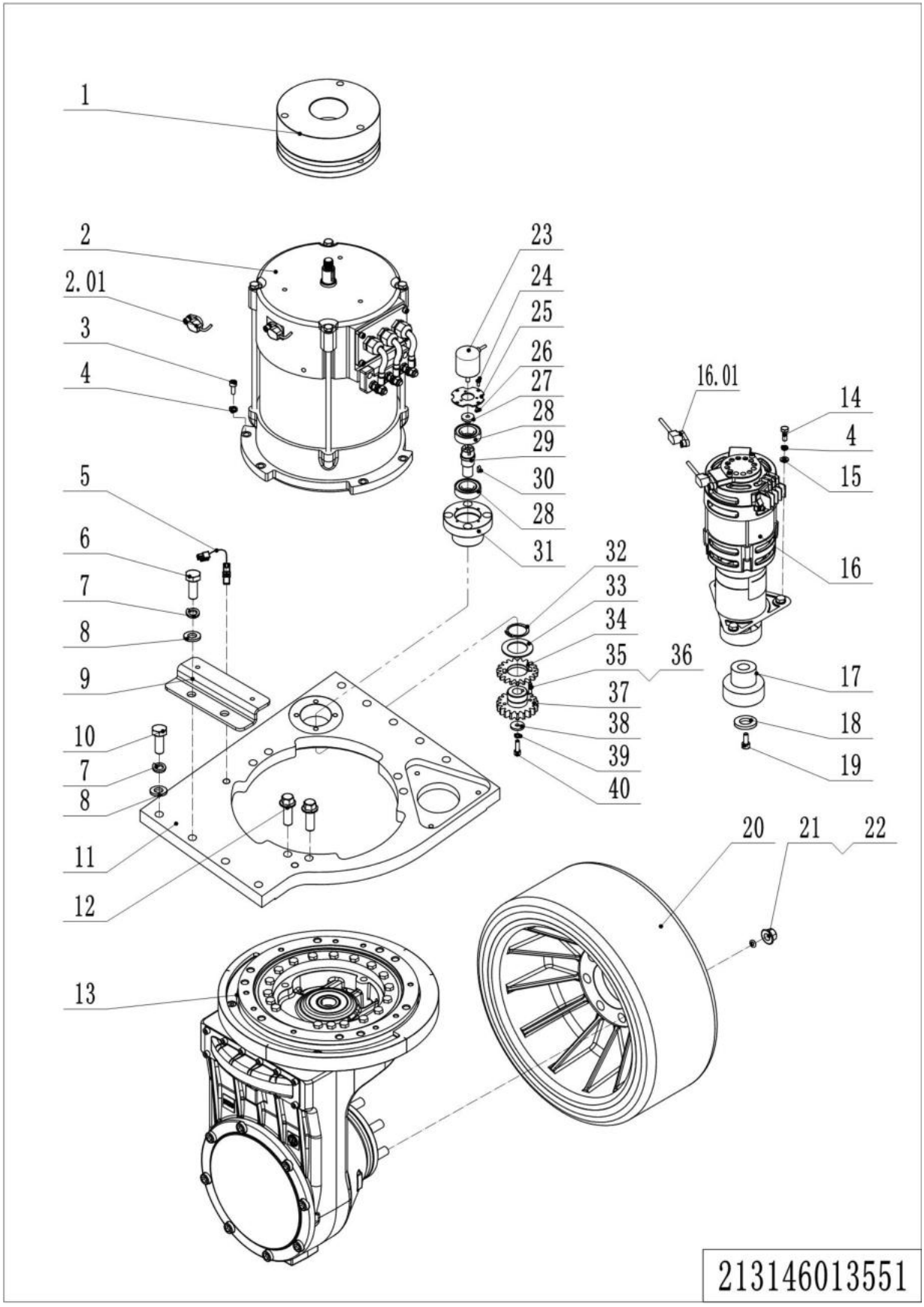

1= Supply as package. 2= Supply with constraints. 3= Phasing-out supply. 4= Supply as assembly. 5= Check other tables.

02Drive Unit(EN1175-2020)(213146013551) Continuation

No.	Item Code	Mark	Item Description	Qty.	Substitute	Note
26	910200200001		Bolt	3		
27	505931520002		Link Block	1		
28	910700200004		Bearing	2		
29	212113520000		Axle	1		
30	910600800004		Flat Key	1		
31	212113520002		Bracket	1		
32	910401300017		Circlip	1		
33	212113520005		Press Plate	1		
34	212113520008		Gear	1		
35	910600100045		Cylindrical Pin	1		
36	212113520006		Spring	1		
37	212113520007		Gear	1		
38	212113520004		Press Plate	1		
39	910400500005		Spring Washer	1		
40	910200200036		Screw	1		

1= Supply as package. 2= Supply with constraints. 3= Phasing-out supply. 4= Supply as assembly. 5= Check other tables.

03Lift Unit (212146032501)

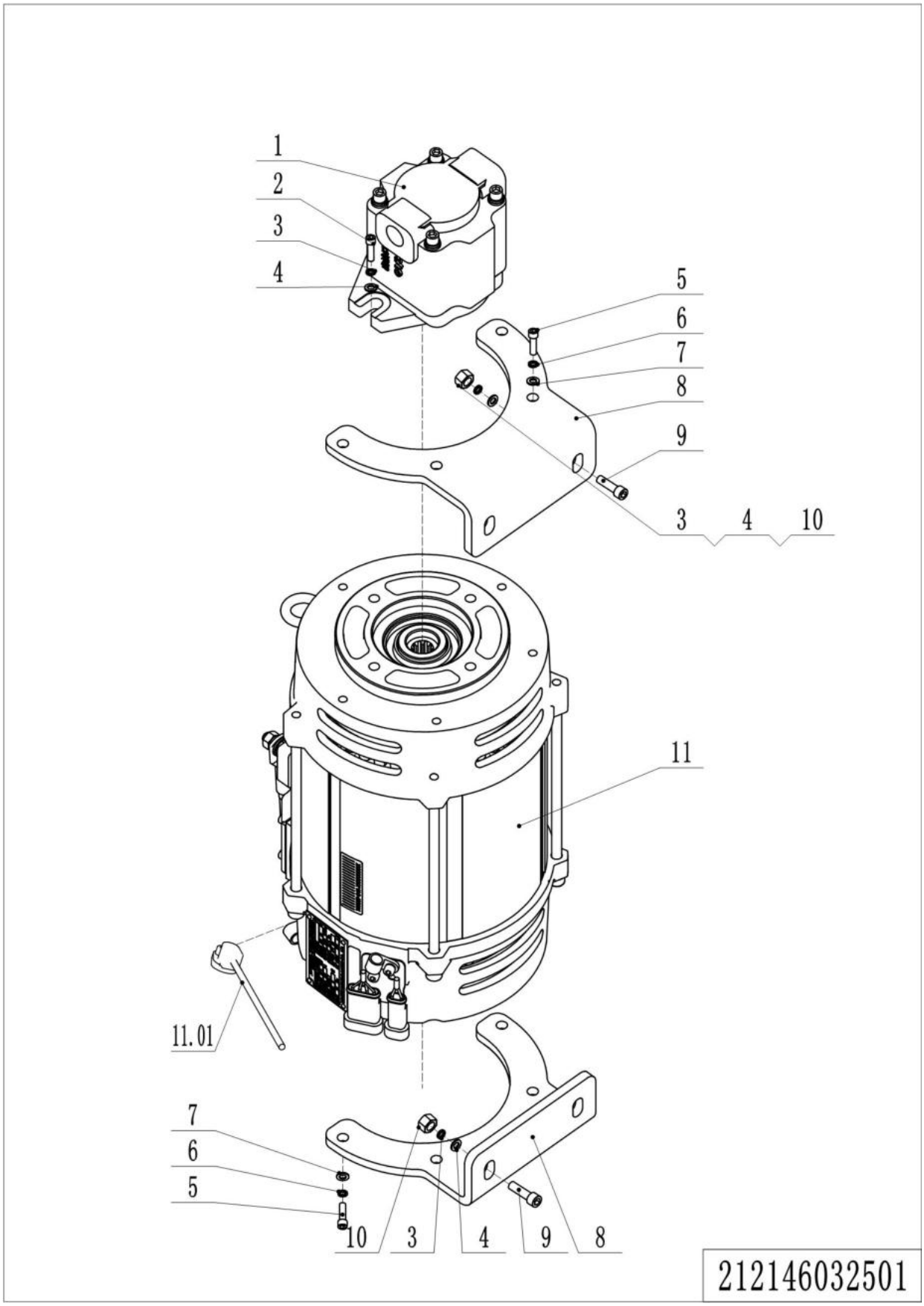

1= Supply as package. 2= Supply with constraints. 3= Phasing-out supply. 4= Supply as assembly. 5= Check other tables.

03Lift Unit(212146032501)

No.	Item Code	Mark	Item Description	Qty.	Substitute	Note
1	950800200008		Gear Pump	1		
2	910200200077	1	Screw	2		
3	910400500007	1	Spring Washer	6		
4	910400100007	1	Flat Washer	6		
5	910200200057	1	Screw	8		
6	910400500006	1	Spring Washer	8		
7	910400100006	1	Flat Washer	8		
8	212132520000		Mounting Plate	2		
9	910200200079	1	Screw	4		
10	910300100007	1	Nut	4		
11	920900100027		Motor	1		KDS
11	920900100126		Motor	1		
11.01	921800200013		Encoder	1		KDS
11.01	921800200038		Encoder	1		

1= Supply as package. 2= Supply with constraints. 3= Phasing-out supply. 4= Supply as assembly. 5= Check other tables.

Chapter 2：Hydraulic System

01Hydraulic Assembly(213146025001)

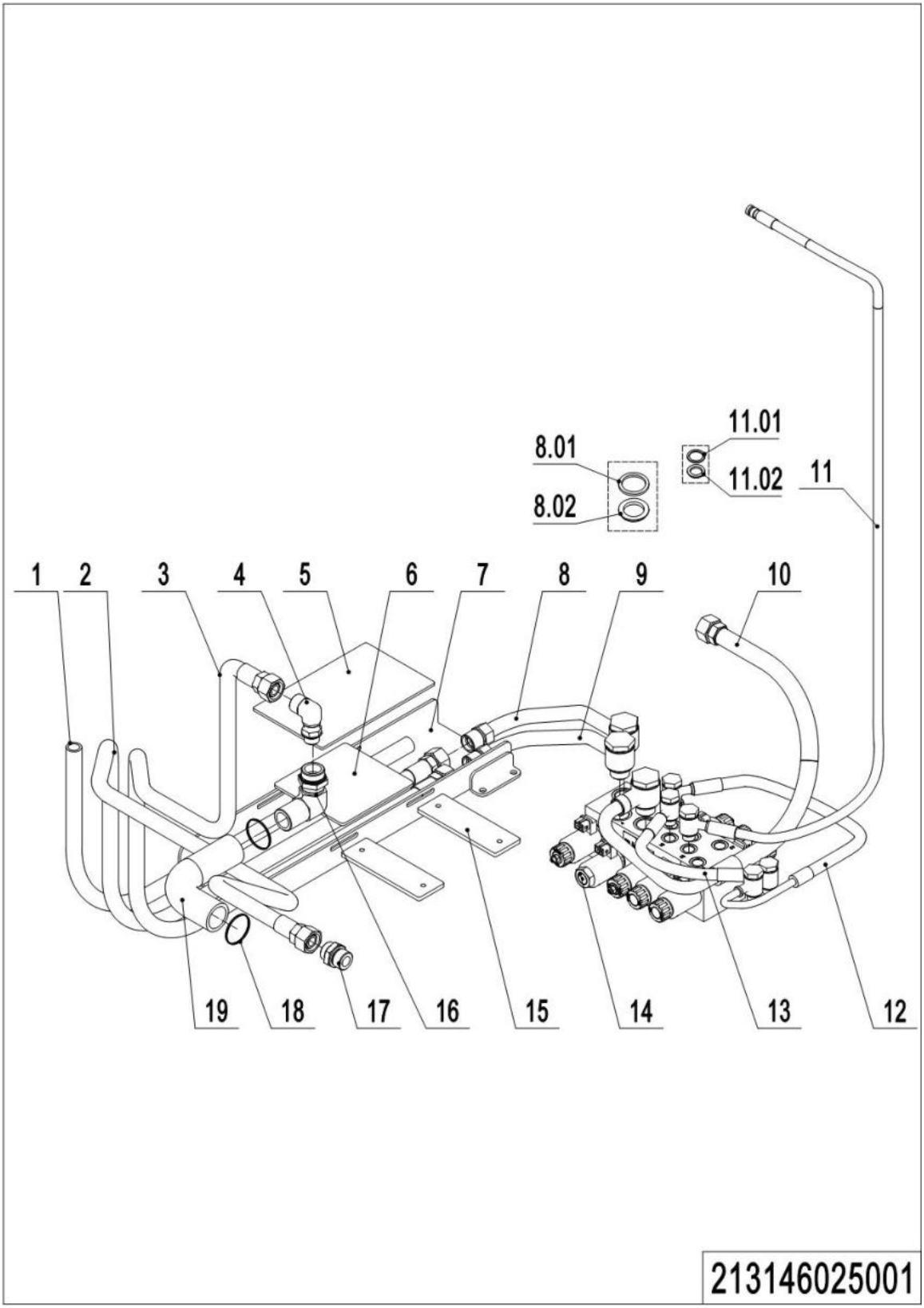

1= Supply as package. 2= Supply with constraints. 3= Phasing-out supply. 4= Supply as assembly. 5= Check other tables.

Print Number: Print Date:

01Hydraulic Assembly(213146025001)

No.	Item Code	Mark	Item Description	Qty.	Substitute	Note
1	212125020014		Hose	1		
2	212125020012		Hose	1		
3	212125020013		Hose	1		
4	950401100005		Joint	1		
5	212125020010		Press Plate	1		
6	212125020011		Plate	1		
7	212125010000		Guide Slot	1		
8	212125020005		Steel Tube	1		
8.01	910800900008		Washer	3		
8.02	910800900016		Washer	3		
9	212125020006		Steel Tube	1		
10	212125020028		Hose	1		
11	212125020015		Hose	4		4500
11	212125020026		Hose	4		5000
11	212125020027		Hose	4		5500
11	212125020018		Hose	4		6000
11	212125020019		Hose	4		6500
11	212125020020		Hose	4		7000
11	212125020021		Hose	4		7500
11	212125020022		Hose	4		8000
11	212125020023		Hose	4		8500
11	212125020024		Hose	4		9000
11	212125020025		Hose	4		9500
11.01	910800900005		Washer	8		
11.02	910800900015		Washer	8		
12	212125020016		Hose	1		
13	212125020004		Hose	1		
14	950600100023		Hydraulic Valve	1		
15	212125020030		Press Plate	1		
16	216525020008		Adapter	1		
17	950400300016		Joint	1		
18	911000600006		Hose Clamp	2		
19	950401100005		Joint	1		

1= Supply as package. 2= Supply with constraints. 3= Phasing-out supply. 4= Supply as assembly. 5= Check other tables.

02Reach Cylinder(213146020001)

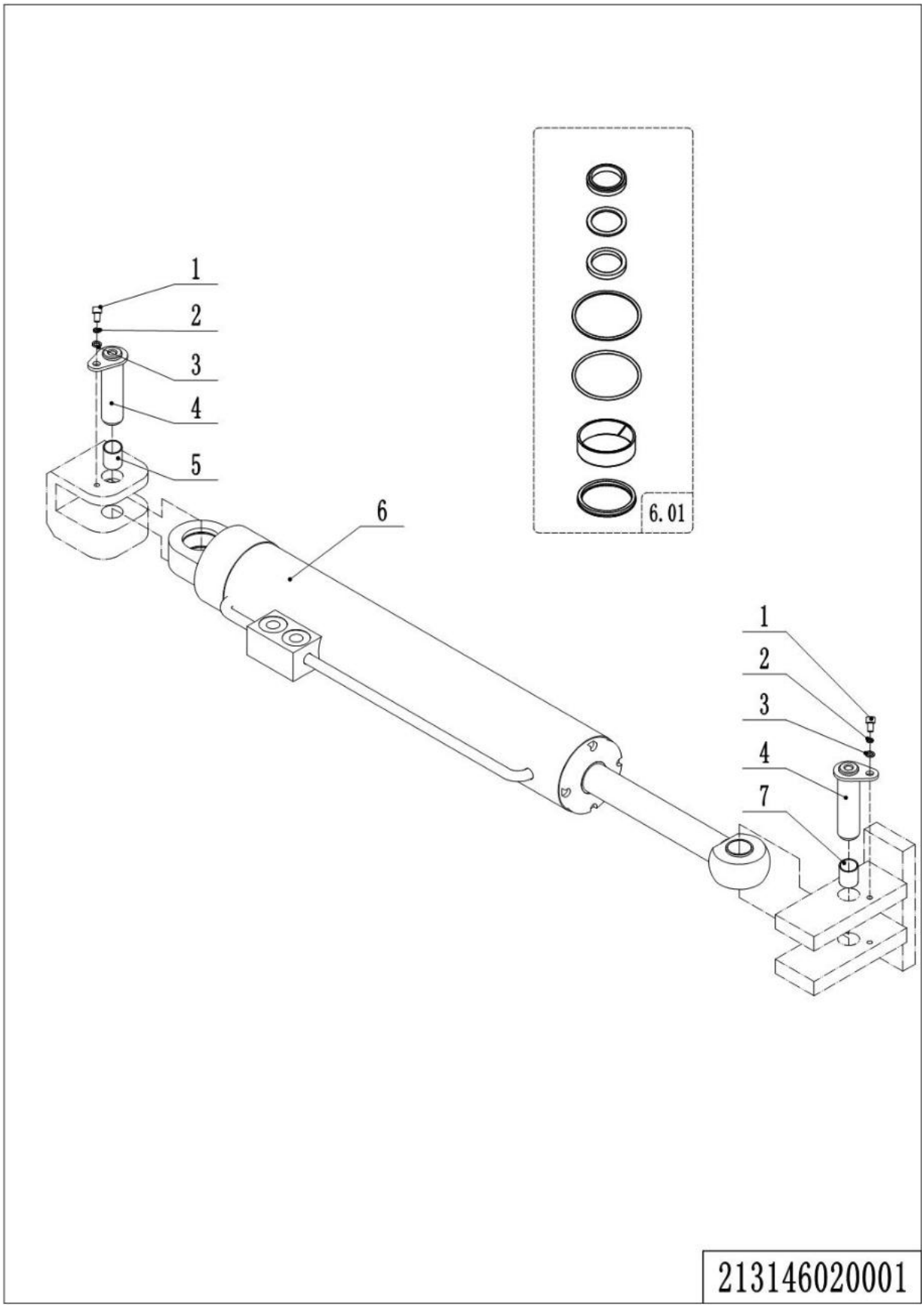

1= Supply as package. 2= Supply with constraints. 3= Phasing-out supply. 4= Supply as assembly. 5= Check other tables.

02Reach Cylinder(213146020001)

No.	Item Code	Mark	Item Description	Qty.	Substitute	Note
1	910200200034	1	Screw	2		
2	910400500005	1	Spring Washer	2		
3	910400100005	1	Flat Washer	2		
4	212120010001		Pin	2		
5	212120020002		Bushing	1		
6	213120010000		Cylinder	1		
6.01	212198510004		Seal Kit	1		
7	212120020003		Bushing	1		

1= Supply as package. 2= Supply with constraints. 3= Phasing-out supply. 4= Supply as assembly. 5= Check other tables.

03Oil Tank(212146019001)

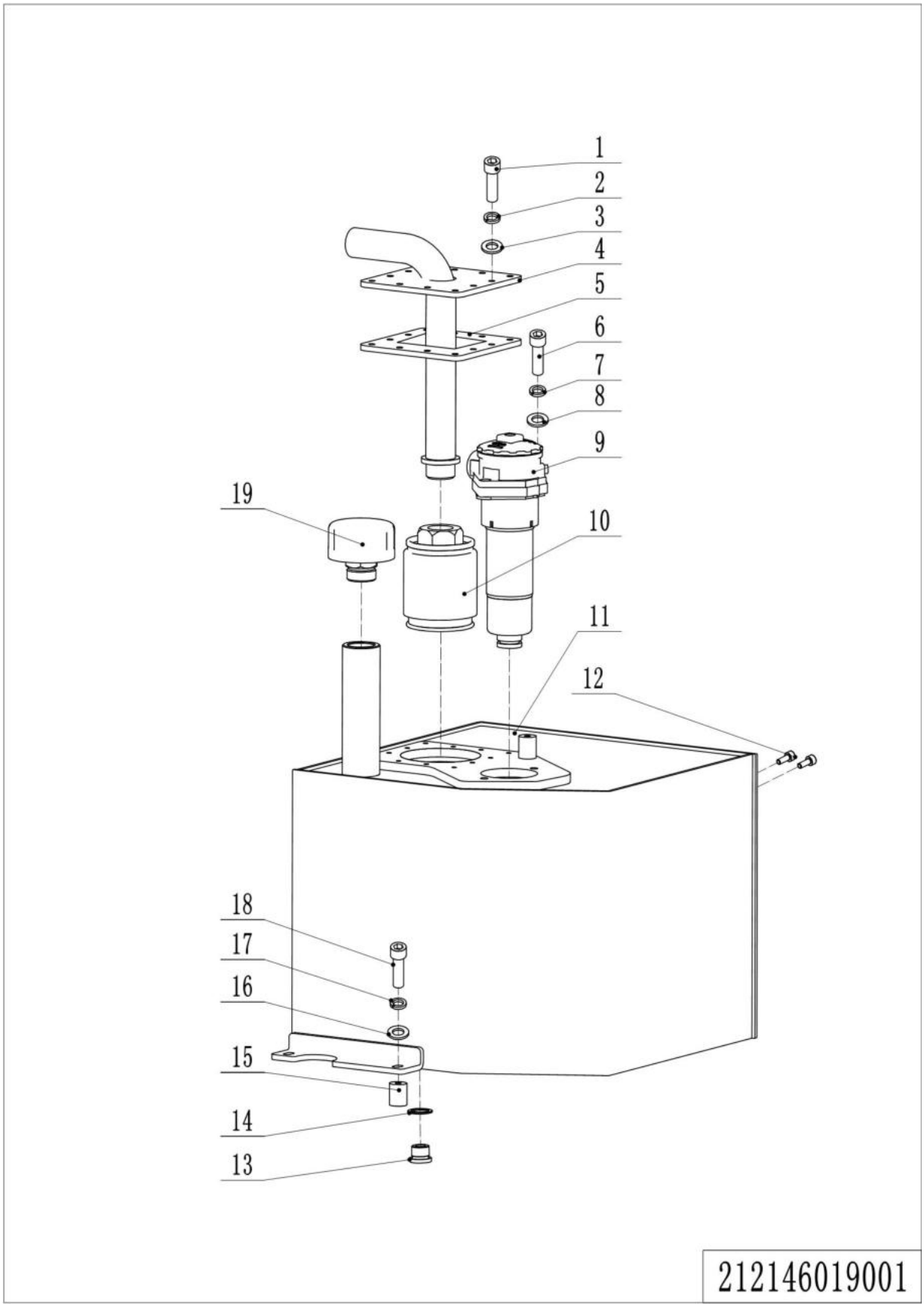

1= Supply as package. 2= Supply with constraints. 3= Phasing-out supply. 4= Supply as assembly. 5= Check other tables.

03 Oil Tank(212146019001)

No.	Item Code	Mark	Item Description	Qty.	Substitute	Note
1	910200200035	1	Screw	12		
2	910400500005	1	Spring Washer	12		
3	910400100005	1	Flat Washer	12		
4	212119010001		Cap-Tank	1		
5	212119020000		Sealing Gasket	1		
6	910200200077	1	Screw	2		
7	910400500007	1	Spring Washer	2		
8	910400100007	1	Flat Washer	2		
9	951000300005		Filter	1		
10	951000400001		Filter	1		
11	213319010000		Tank	1		
12	910200200074	1	Screw	4		
13	255019020015		Filler Plug	1		
14	910800900001		Bonded Washer	1		
15	532621520062		Crash Pad	2		
16	910400100006	1	Flat Washer	3		
17	910400500006	1	Spring Washer	3		
18	910200200058	1	Screw	2		
19	212119020019		Screw Plug	1		

1= Supply as package. 2= Supply with constraints. 3= Phasing-out supply. 4= Supply as assembly. 5= Check other tables.

04Tilt Cylinder(212146020501)

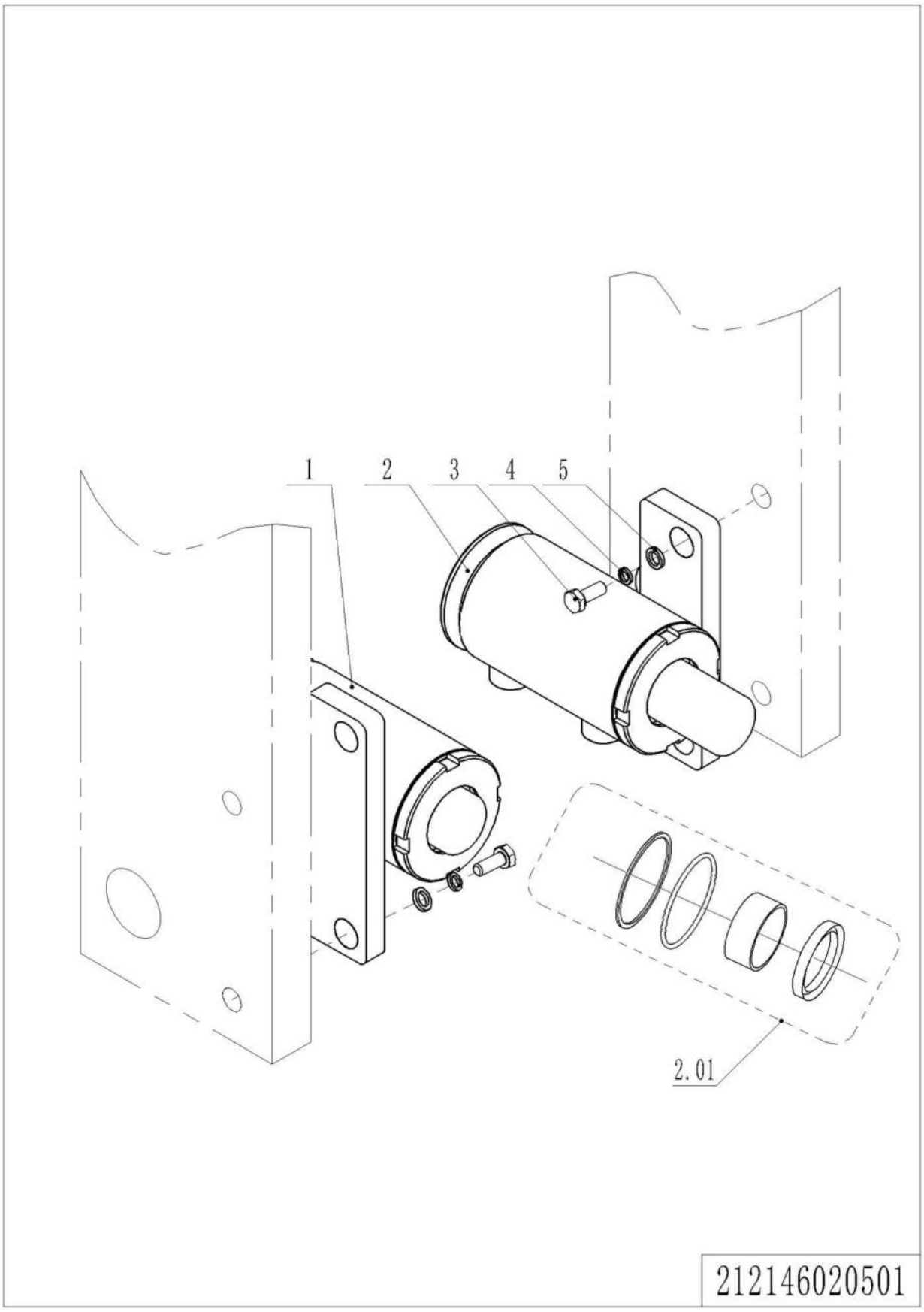

1= Supply as package. 2= Supply with constraints. 3= Phasing-out supply. 4= Supply as assembly. 5= Check other tables.

04Tilt Cylinder(212146020501)

No.	Item Code	Mark	Item Description	Qty.	Substitute	Note
1	214120510001		Tilt Cylinder	1		
2	214120510000		Tilt Cylinder	1		
2.01	212198510000		Seal Kit	2		
3	910100300063	1	Bolt	4		
4	910400500009	1	Spring Washer	4		
5	910400100009	1	Flat Washer	4		

1= Supply as package. 2= Supply with constraints. 3= Phasing-out supply. 4= Supply as assembly. 5= Check other tables.

Chapter 3：Truck Frame

01Chassis(213146021501)

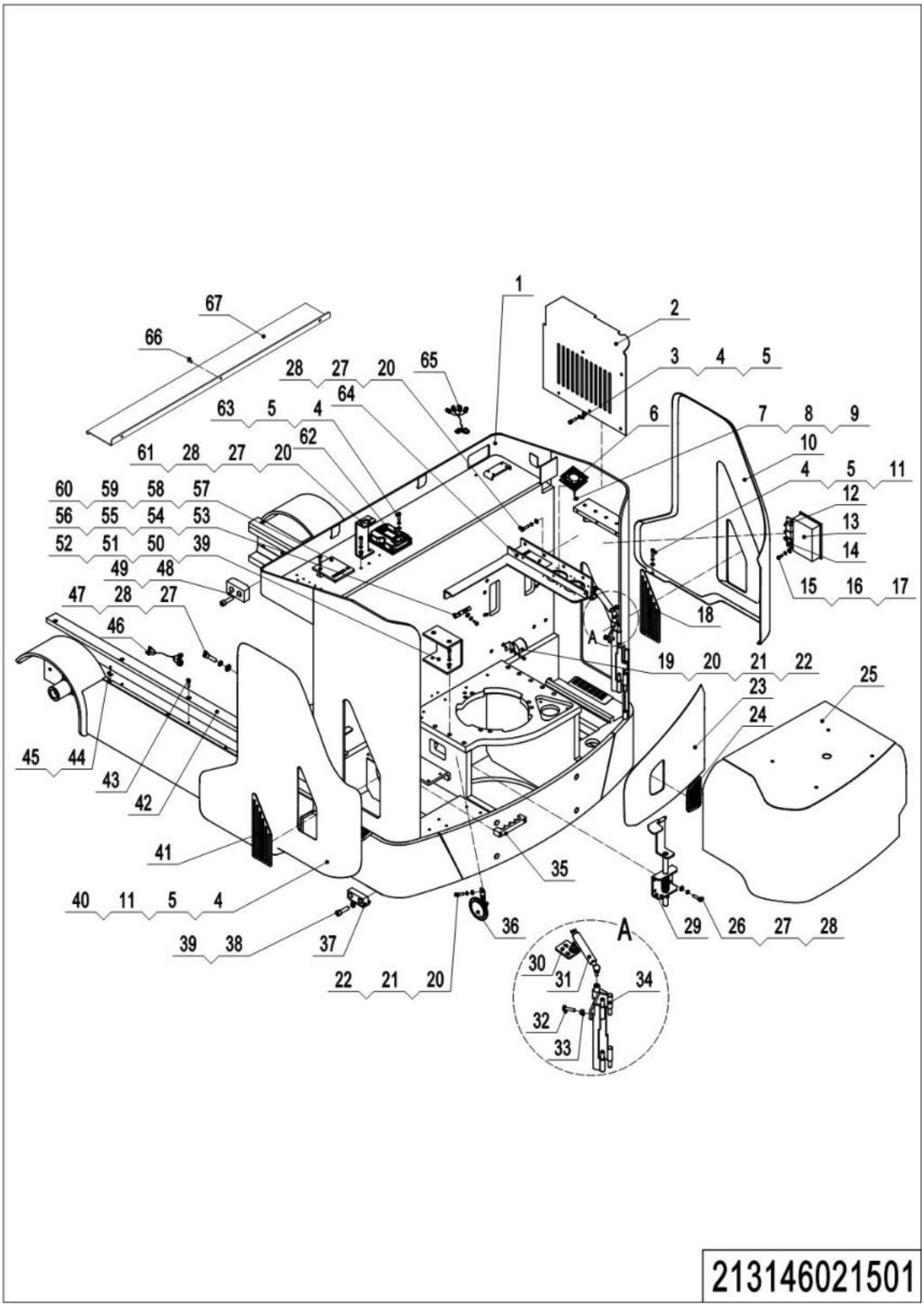

1= Supply as package. 2= Supply with constraints. 3= Phasing-out supply. 4= Supply as assembly. 5= Check other tables.

01Chassis(213146021501)

No.	Item Code	Mark	Item Description	Qty.	Substitute	Note
1	213121510000		Chassis	1		
2	212121510005		Cover	1		
3	910200300017	1	Screw	6		
4	910400500005	1	Spring Washer	16		
5	910400100005	1	Flat Washer	16		
6	212133510018		Fan	2		
7	910200500028	1	Screw	8		
8	910400500003	1	Spring Washer	8		
9	910400100003	1	Flat Washer	8		
10	212121520092		Side Plate(right)	1		
11	910200200036	1	Screw	10		
12	920800100001		Relay	2		
13	921900100014		Converter	1		
14	922000100005		Lamp	1		
15	910200500037	1	Screw	7		
16	910400500004	1	Spring Washer	7		
17	910400100004	1	Flat Washer	7		
18	212121520101		Vent	1		
19	920500100002		Horn	1		
20	910200200055	1	Screw	8		
21	910400500006	1	Spring Washer	2		
22	910400100006	1	Flat Washer	2		
23	212121520091		Cover	1		
24	212121520102		Vent	1		
25	212121520090		Cover	1		
26	910200200060	1	Screw	4		
27	910400500006	1	Spring Washer	12		
28	910400100006	1	Flat Washer	12		
29	212121501001		Handle Assembly	1		212146021502
30	212121510008		Fixing Base	1		

1= Supply as package. 2= Supply with constraints. 3= Phasing-out supply. 4= Supply as assembly. 5= Check other tables.

01Chassis(213146021501)Continuation1

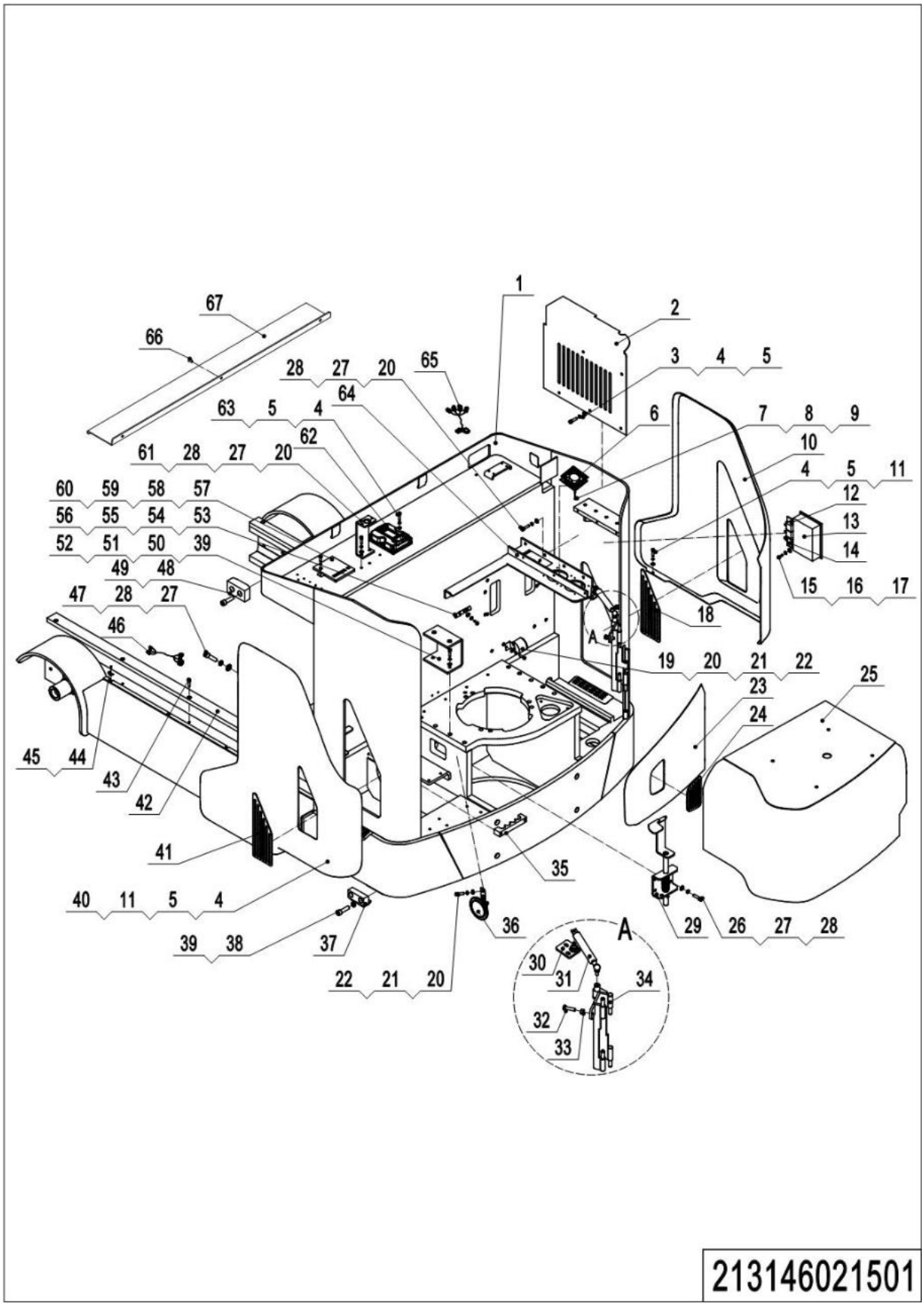

1= Supply as package. 2= Supply with constraints. 3= Phasing-out supply. 4= Supply as assembly. 5= Check other tables.

01Chassis(213146021501)Continuation1

No.	Item Code	Mark	Item Description	Qty.	Substitute	Note
31	212121520048		Gas Spring	1		
32	910100300024	1	Bolt	1		
33	910300100006	1	Nut	1		
34	212121510002		Hinge	1		
35	212121520064		Fixing Plate	1		
36	920500100001		Horn	1		
37	212121520068		Support Leg	2		
38	910200200099	1	Screw	4		
39	910400500008	1	Spring Washer	6		
40	212121520093		Side Plate(left)	1		
41	212121520100		Vent	1		
42	213121520000		Guide Rail	2		
43	910200200058	1	Screw	8		
44	212121520075		Press Plate	8		
45	910200300011	1	Screw	8		
46	212133010014		Wire Harness	1		
47	910200200065	1	Screw	2		
48	216521520001		Crash Pad	2		
49	910200200098	1	Screw	4		
50	212121520047		Fixing Plate	1		
51	910100300096	1	Bolt	2		
52	910400100008	1	Flat Washer	2		
53	921300300005		Holder	3		
54	910200500037	1	Screw	6		
55	910400500004	1	Spring Washer	6		
56	910400100004	1	Flat Washer	6		
57	921400100115		Controller	1		1356P
58	910200500022	1	Screw	2		
59	910400500003	1	Spring Washer	2		
60	910400100003	1	Flat Washer	2		

1= Supply as package. 2= Supply with constraints. 3= Phasing-out supply. 4= Supply as assembly. 5= Check other tables.

01Chassis(213146021501)Continuation2

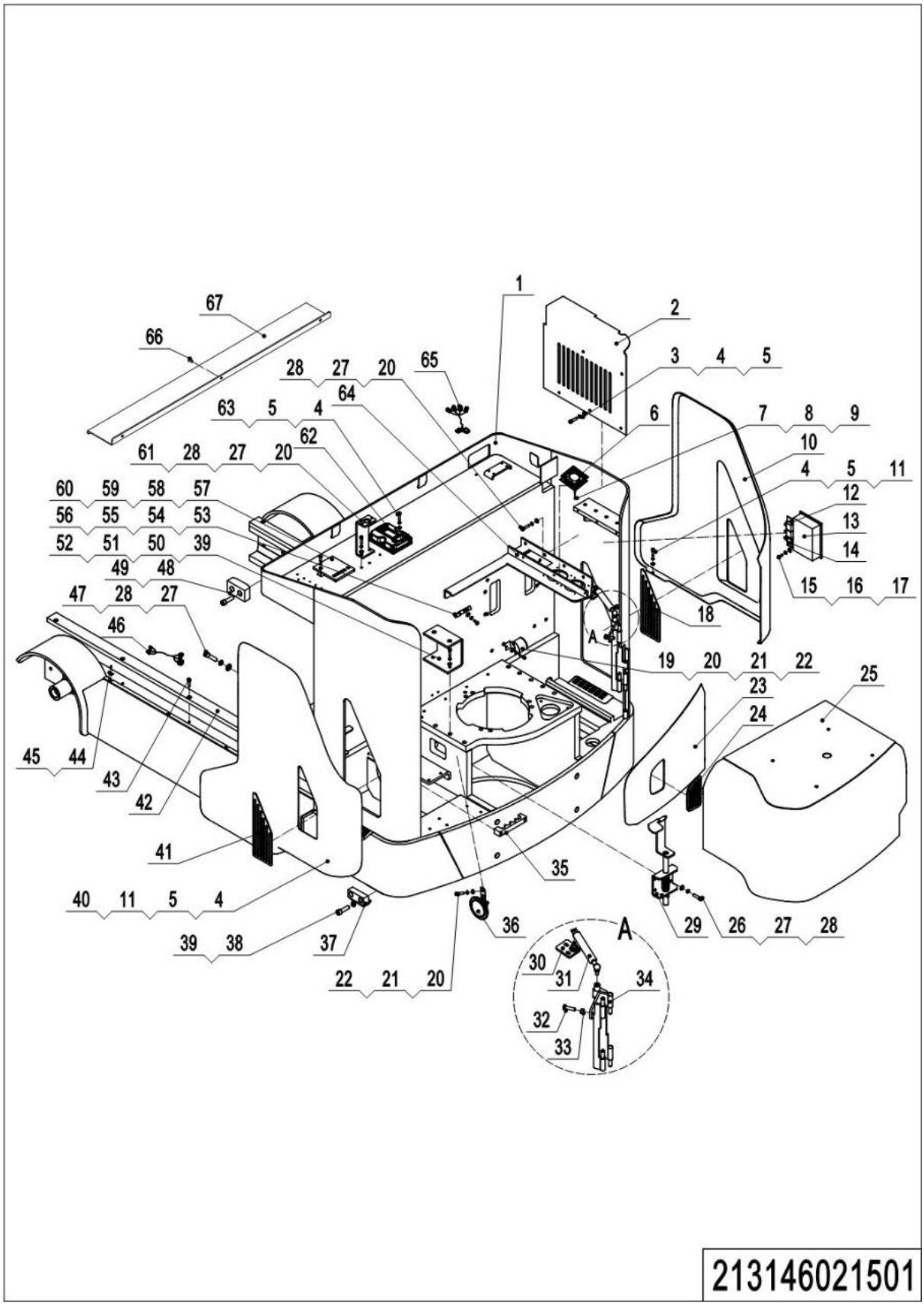

1= Supply as package. 2= Supply with constraints. 3= Phasing-out supply. 4= Supply as assembly. 5= Check other tables.

01Chassis(213146021501)Continuation2

No.	Item Code	Mark	Item Description	Qty.	Substitute	Note
61	212121520008		Fixing Plate	1		
62	921400100113		Controller	1		1353
62	921400100189		Controller	1		1351
63	910200200035	1	Screw	2		
64	212121510006		Fixing Base	1		
65	212133010016		Wire Harness	1		
66	941100100001		Screw	3		
67	213121520011		Guard Plate	1		

1= Supply as package. 2= Supply with constraints. 3= Phasing-out supply. 4= Supply as assembly. 5= Check other tables.

02Handle Assembly(212146021502)

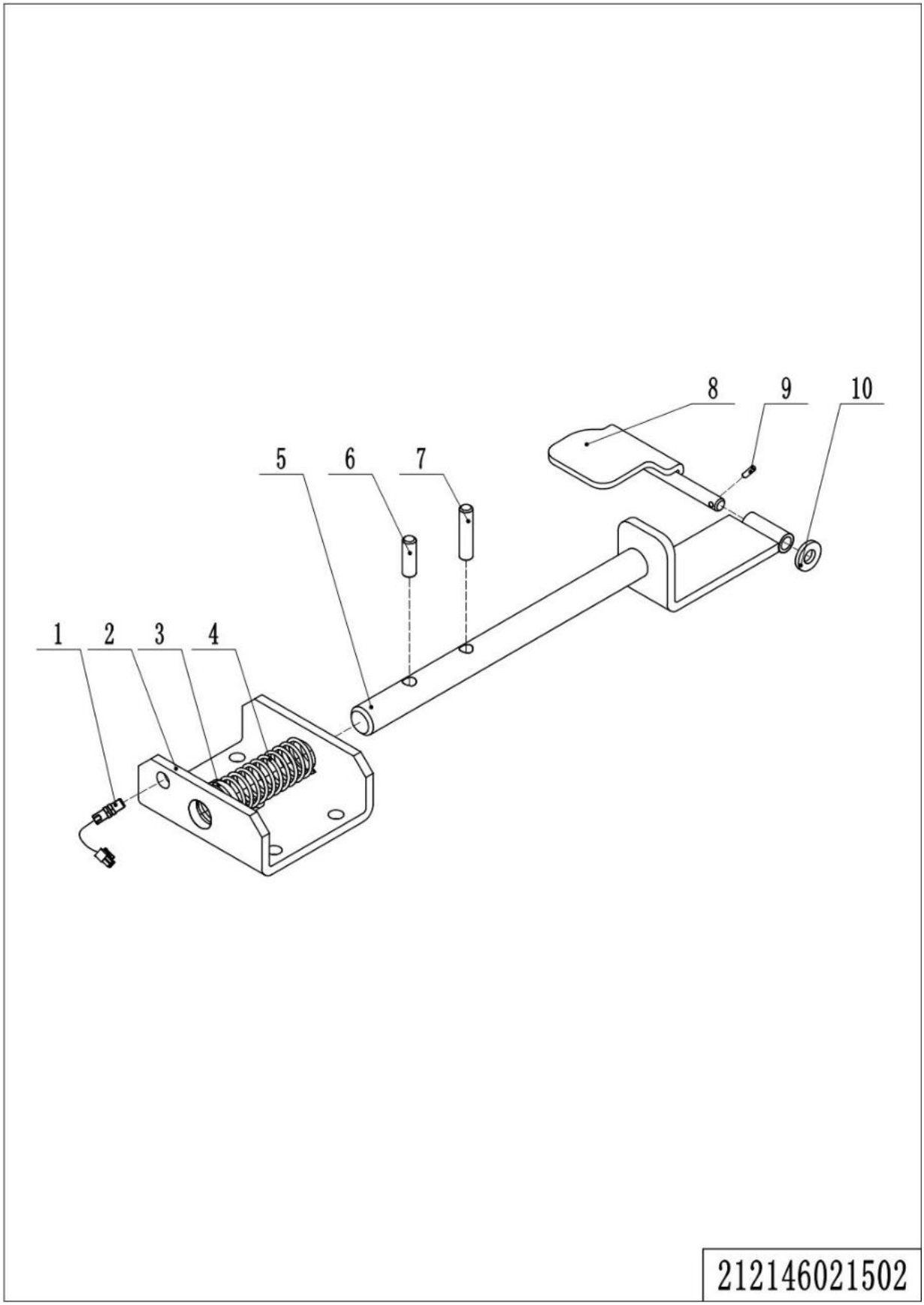

1= Supply as package. 2= Supply with constraints. 3= Phasing-out supply. 4= Supply as assembly. 5= Check other tables.

02Handle Assembly(212146021502)

No.	Item Code	Mark	Item Description	Qty.	Substitute	Note
1	212133510007		Proximity Switch	1		
2	212121520050		Fixing Plate	1		
3	212121520052		Washer	1		
4	212121520051		Spring	1		
5	213321510004		Axle	1		
6	910600400044	1	Spring Pin	1		
7	910600400046	1	Spring Pin	1		
8	212121510003		Bolt	1		
9	910600400002	1	Spring Pin	1		
10	910400100006	1	Flat Washer	1		

1= Supply as package. 2= Supply with constraints. 3= Phasing-out supply. 4= Supply as assembly. 5= Check other tables.

03Overhead Guard(212146022001)

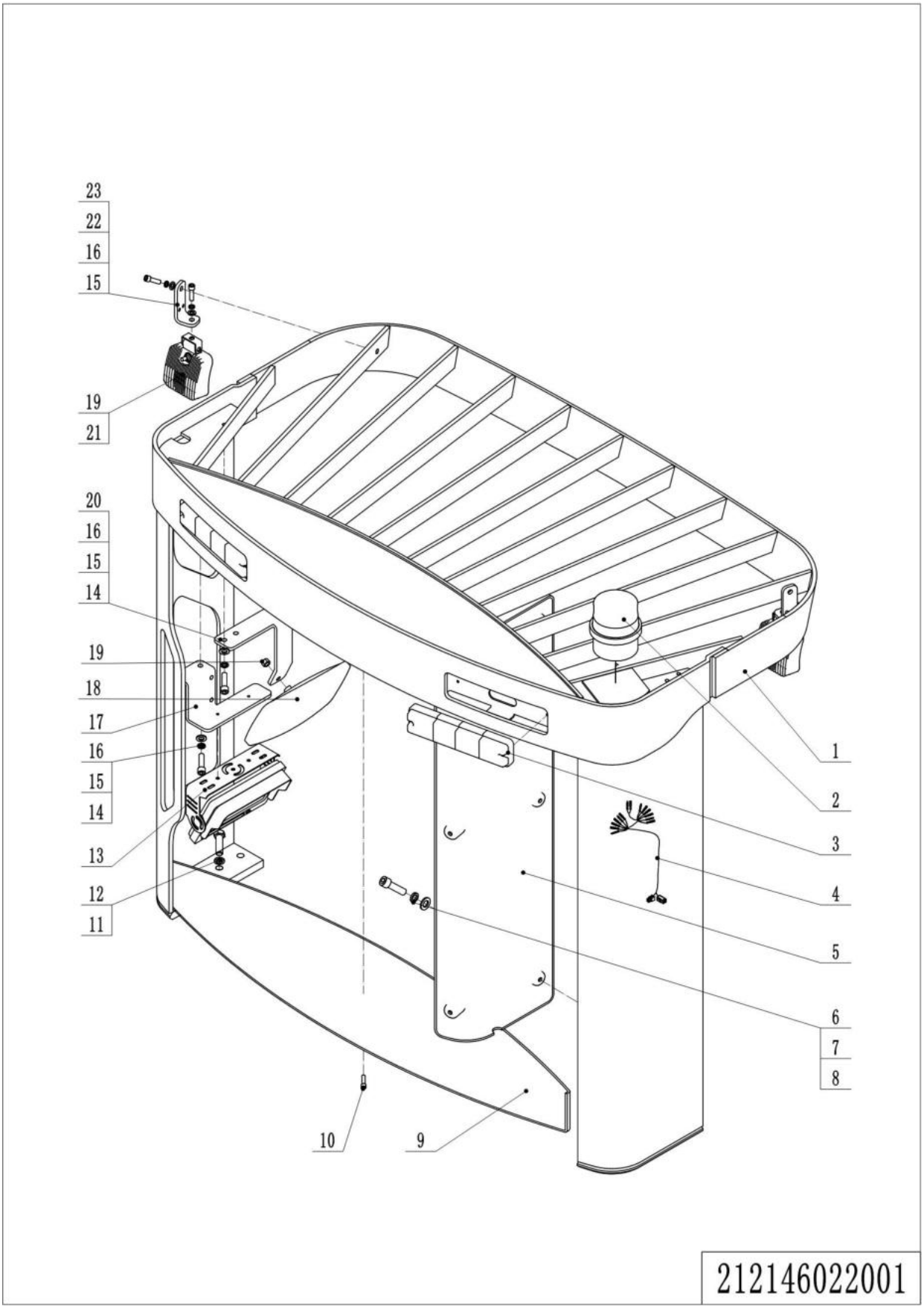

1= Supply as package. 2= Supply with constraints. 3= Phasing-out supply. 4= Supply as assembly. 5= Check other tables.

03Overhead Guard(212146022001)

No.	Item Code	Mark	Item Description	Qty.	Substitute	Note
1	212122010000		Overhead Guard	1		
2	922000100004		Lamp	1		
3	922000100003		Lamp	2		
4	212133010013		Wire Harness	1		
5	212122020021		Cover	1		
6	910200300017	1	Screw	6		
7	910400500005	1	Spring Washer	6		
8	910400100005	1	Flat Washer	6		
9	212122020020		Cover	1		
10	910200300017	1	Screw	1		
11	910200300037	1	Screw	8		
12	910400500008	1	Spring Washer	8		
13	921100100058	5	Display	1		
14	910200200055	1	Screw	4		
15	910400500006	1	Spring Washer	8		
16	910400100006	1	Flat Washer	8		
17	212122020018		Bolt	1		
18	940800100001		Rearview Mirror	1		
19	910300100006	1	Nut	5		
20	212122020022		Mirror	1		
21	922000100016		Lamp	2		
22	910200200058	1	Screw	4		
23	212122020023		Mounting Plate	2		

1= Supply as package. 2= Supply with constraints. 3= Phasing-out supply. 4= Supply as assembly. 5= Check other tables.

04Platform(212146018001)

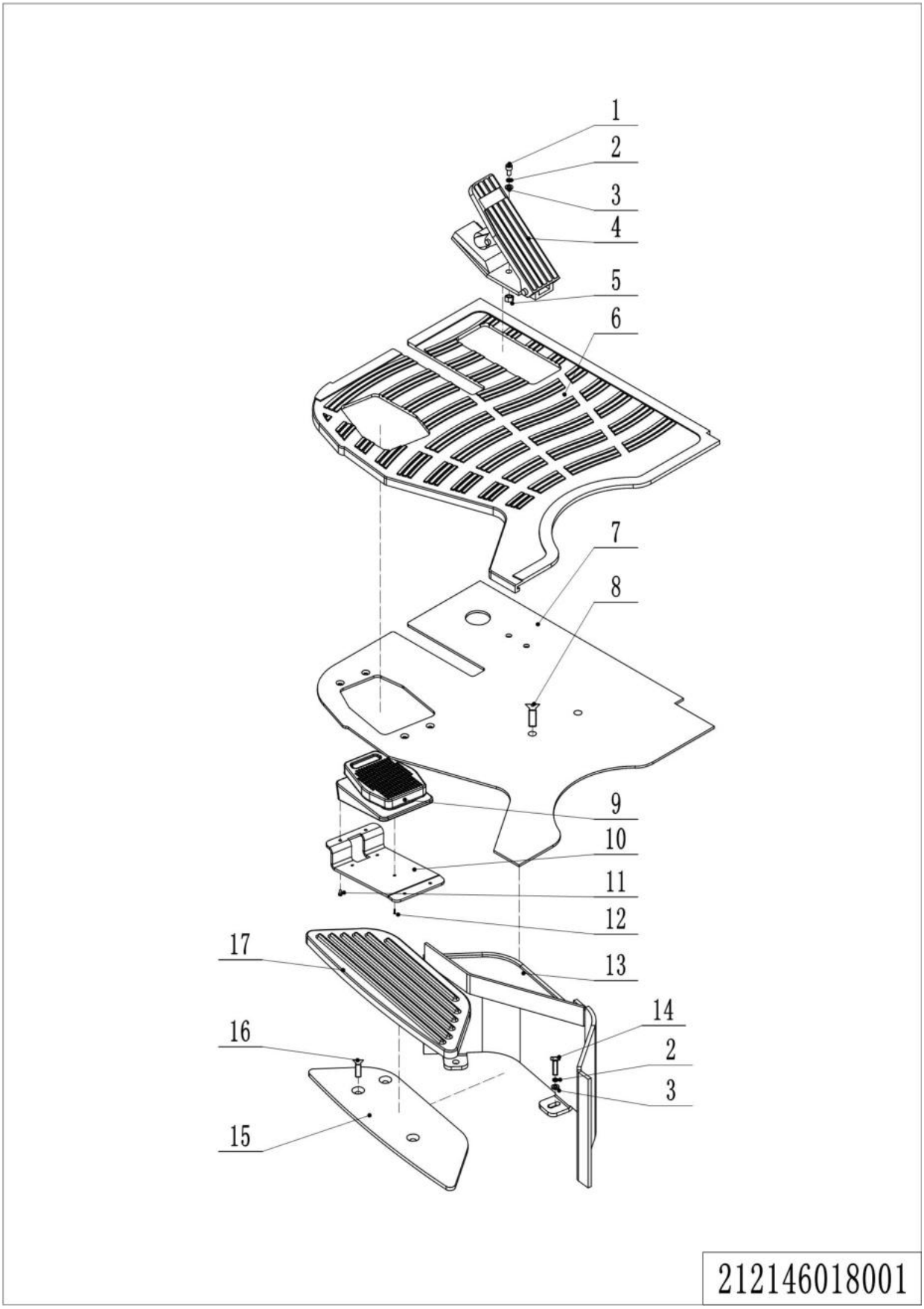

1= Supply as package. 2= Supply with constraints. 3= Phasing-out supply. 4= Supply as assembly. 5= Check other tables.

04Platform(212146018001)

No.	Item Code	Mark	Item Description	Qty.	Substitute	Note
1	910200200057	1	Screw	2		
2	910400100006	1	Flat Washer	4		
3	910400500006	1	Spring Washer	4		
4	921700100005		Accelerator	1		
4	921700100028		Accelerator	1		EN1175-2020
5	910300100006	1	Nut	2		
6	212118020000		Mat	1		
7	212118020001		Platform	1		
8	910200400033	1	Screw	2		
9	212133510019		Foot Switch	1		
10	212118020008		Mounting Plate	1		
11	910200400009	1	Screw	4		
12	212198520048	1	Screw	3		
13	212118010000		Bracket	1		
14	910100300022	1	Bolt	2		
15	212118010001		Platform	1		
16	910200400026	1	Screw	3		
17	212118020002		Mat	1		

1= Supply as package. 2= Supply with constraints. 3= Phasing-out supply. 4= Supply as assembly. 5= Check other tables.

05Seat(212146037501)

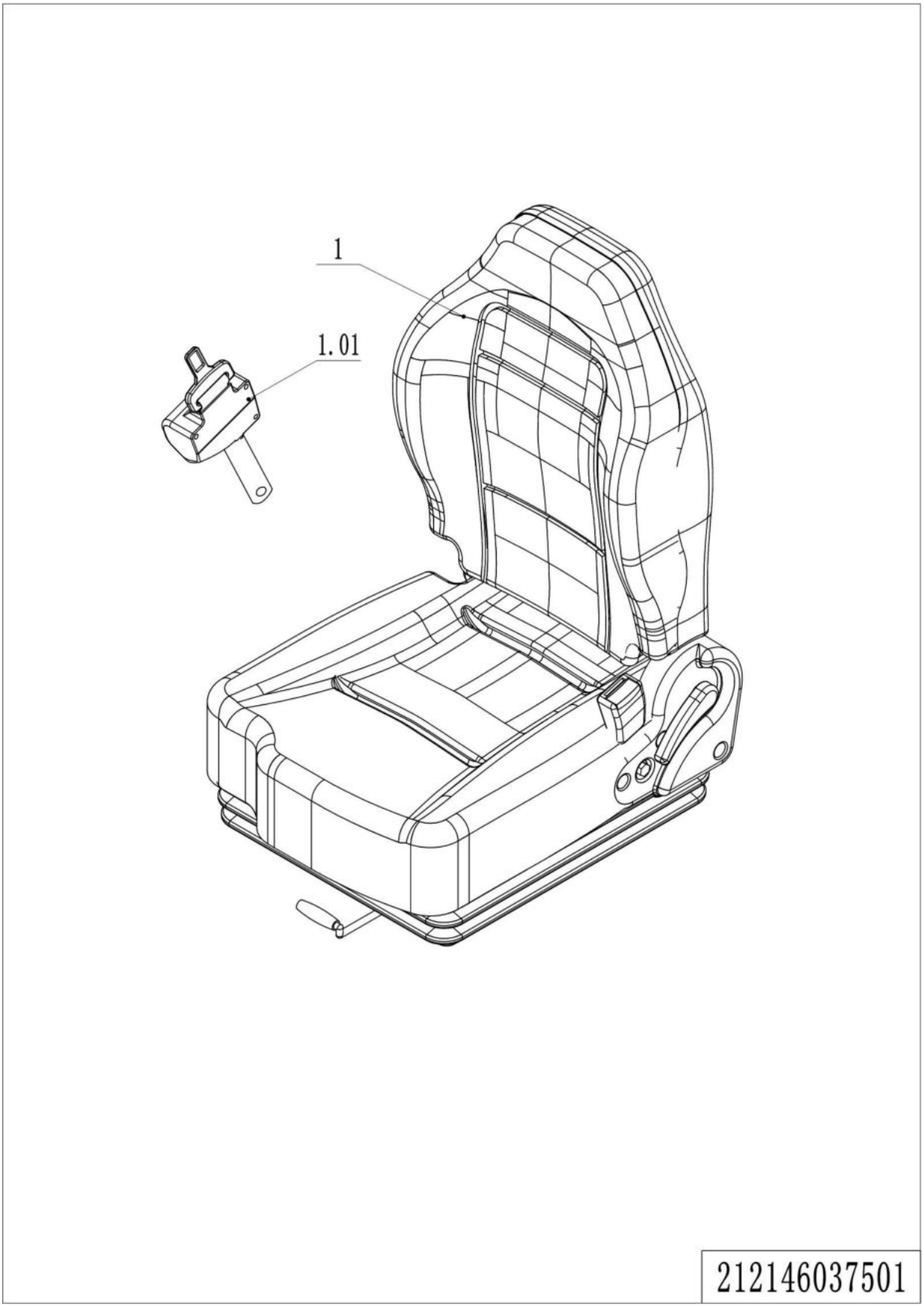

1= Supply as package. 2= Supply with constraints. 3= Phasing-out supply. 4= Supply as assembly. 5= Check other tables.

05Seat(212146037501)

No.	Item Code	Mark	Item Description	Qty.	Substitute	Note
1	213037510000		Seat	1		
1.01	213098510052		Safety Belt	1		

Chapter 4: Mast

01Outer Mast(212146044501)

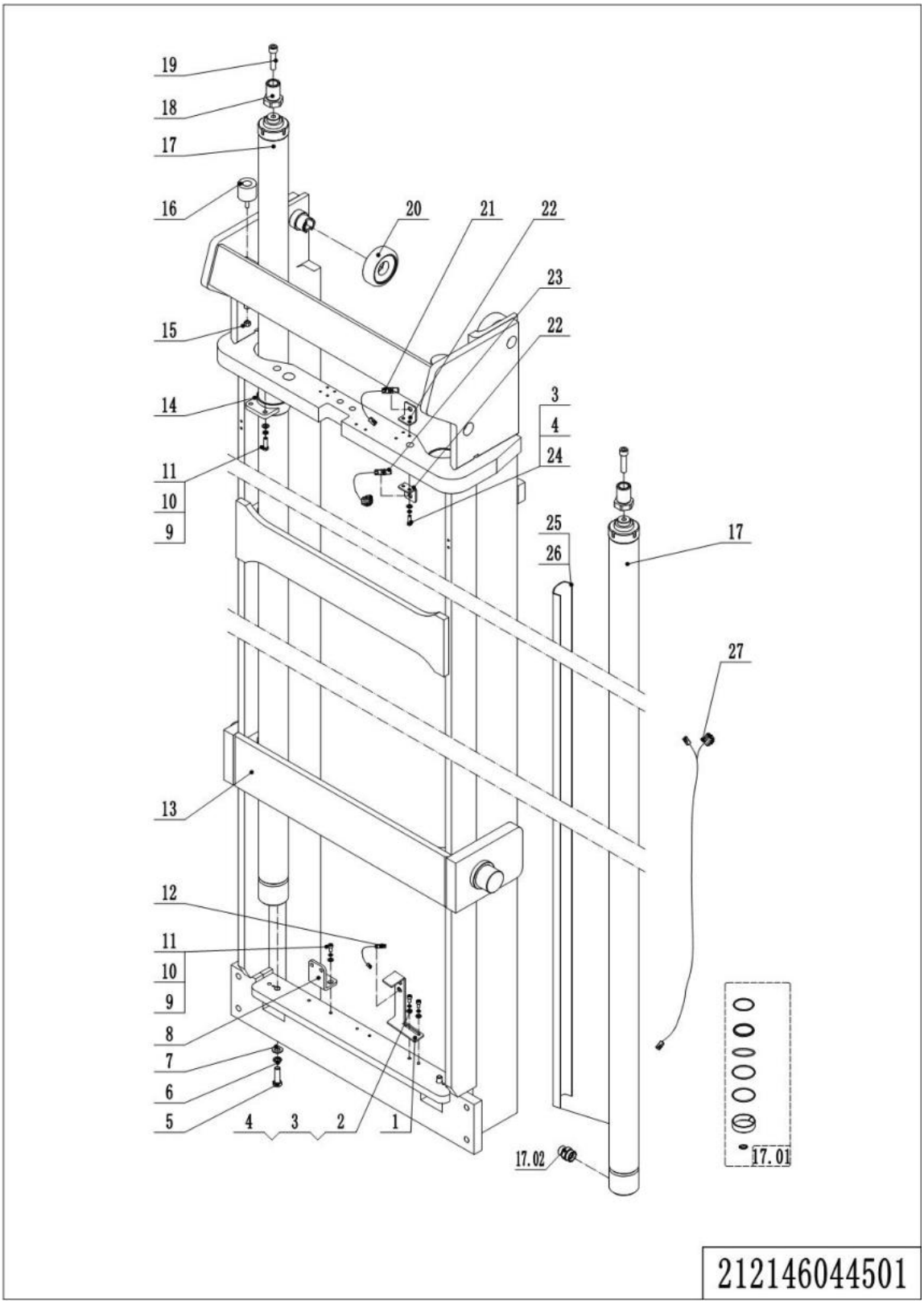

1= Supply as package. 2= Supply with constraints. 3= Phasing-out supply. 4= Supply as assembly. 5= Check other tables.

01Outer Mast(212146044501)

No.	Item Code	Mark	Item Description	Qty.	Substitute	Note
1	212144520297		Fixing Plate	1		
2	910200200033	1	Screw	2		
3	910400500005	1	Spring Washer	6		
4	910400100005	1	Flat Washer	6		
5	910100400012	1	Bolt	2		
6	910400500008	1	Spring Washer	2		
7	910400100008	1	Flat Washer	2		
8	212144520062		Fixing Plate	1		
9	910200200058	1	Screw	6		
10	910400500006	1	Spring Washer	6		
11	910400100006	1	Flat Washer	6		
12	212133510005		Proximity Switch	1		
13	212144510005		Outer Mast(4500)	1		4500
13	212144510006		Outer Mast(5000)	1		5000
13	212144510007		Outer Mast(5500)	1		5500
13	212144510008		Outer Mast(6000)	1		6000
13	212144510009		Outer Mast(6500)	1		6500
13	212144510010		Outer Mast(7000)	1		7000
13	212144510011		Outer Mast(7500)	1		7500
13	212144510012		Outer Mast(8000)	1		8000
13	212144510013		Outer Mast(8500)	1		8500
13	212144510014		Outer Mast(9000)	1		9000
13	212144510015		Outer Mast(9500)	1		9500
14	212144510048		Fixing Base	2		
15	910300500004	1	Nut	2		
16	212144520065		Crash Pad	2		
17	212144510055		Cylinder	2		4500
17	212144510056		Cylinder	2		5000
17	212144510057		Cylinder	2		5500
17	212144510058		Cylinder	2		6000

1= Supply as package. 2= Supply with constraints. 3= Phasing-out supply. 4= Supply as assembly. 5= Check other tables.

01Outer Mast(212146044501)Continuation1

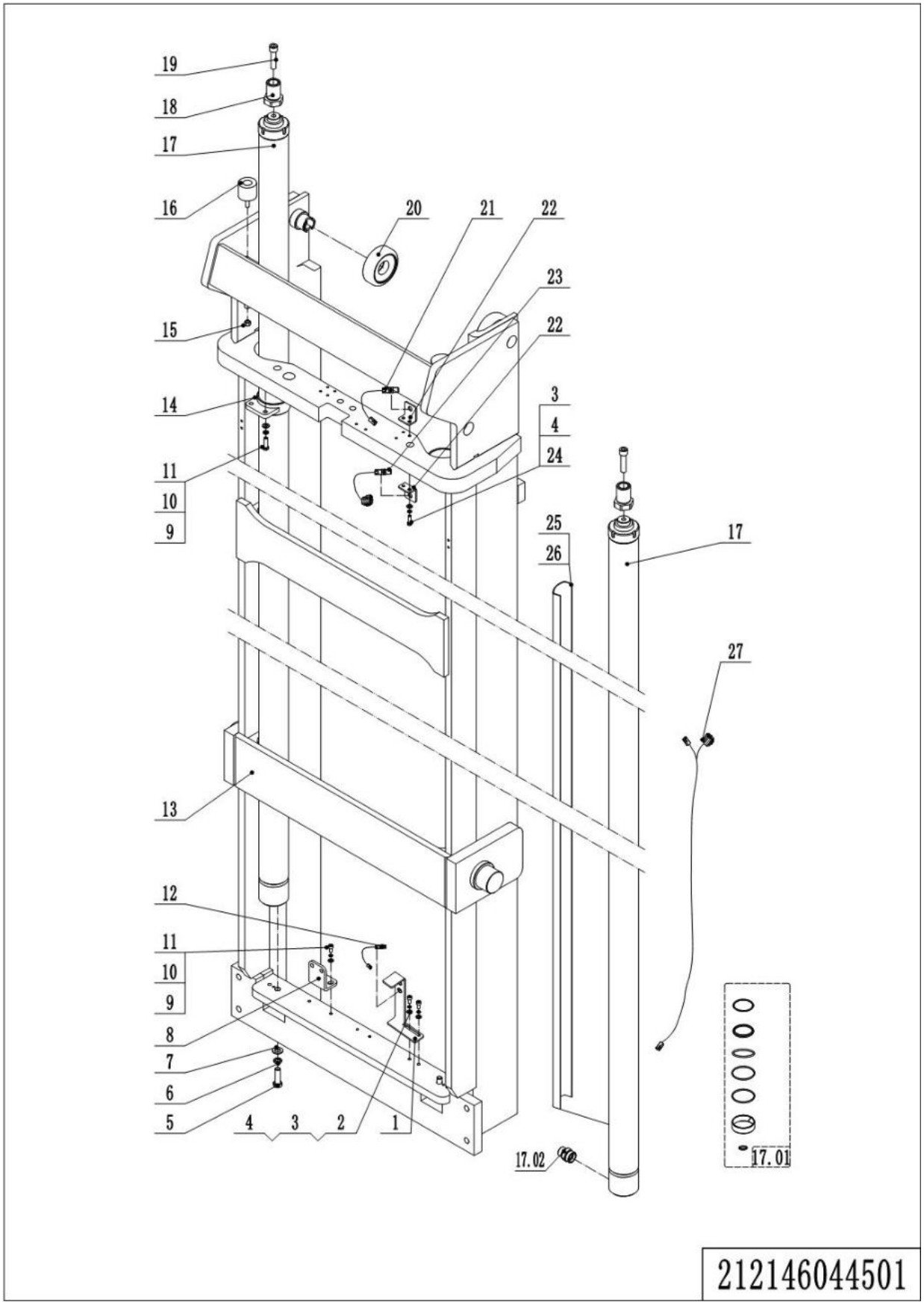

1= Supply as package. 2= Supply with constraints. 3= Phasing-out supply. 4= Supply as assembly. 5= Check other tables.

01Outer Mast(212146044501)Continuation1

No.	Item Code	Mark	Item Description	Qty.	Substitute	Note
17	212144510059		Cylinder	2		6500
17	212144510060		Cylinder	2		7000
17	212144510061		Cylinder	2		7500
17	212144510062		Cylinder	2		8000
17	212144510063		Cylinder	2		8500
17	212144510064		Cylinder	2		9000
17	212144510065		Cylinder	2		9500
17.01	212198510002		Seal Kit	1		
17.02	212198520022		Anti-explosion Valve	1		
18	212144520060		Barrel	2		
19	910100300054	1	Bolt	2		
20	940200300052		Compound Roller	2		
21	212133510008		Proximity Switch	1		
22	212144520061		Fixing Plate	2		
23	212133510006		Proximity Switch	1		
24	910200500052	1	Screw	4		
25	212144520250		Shield	1		若干
25	212144520251		Shield	1		若干
25	212144520252		Shield	1		若干
25	212144520253		Shield	1		若干
25	212144520295		Shield	1		若干
26	911000600007		Hose Clamp	6		若干
27	212133010019		Wire Harness	1		4500
27	212133010020		Wire Harness	1		5000
27	212133010022		Wire Harness	1		5500
27	212133010023		Wire Harness	1		6000
27	212133010024		Wire Harness	1		6500
27	212133010025		Wire Harness	1		7000
27	212133010026		Wire Harness	1		7500
27	212133010027		Wire Harness	1		8000

1= Supply as package. 2= Supply with constraints. 3= Phasing-out supply. 4= Supply as assembly. 5= Check other tables.

01Outer Mast(212146044501)Continuation2

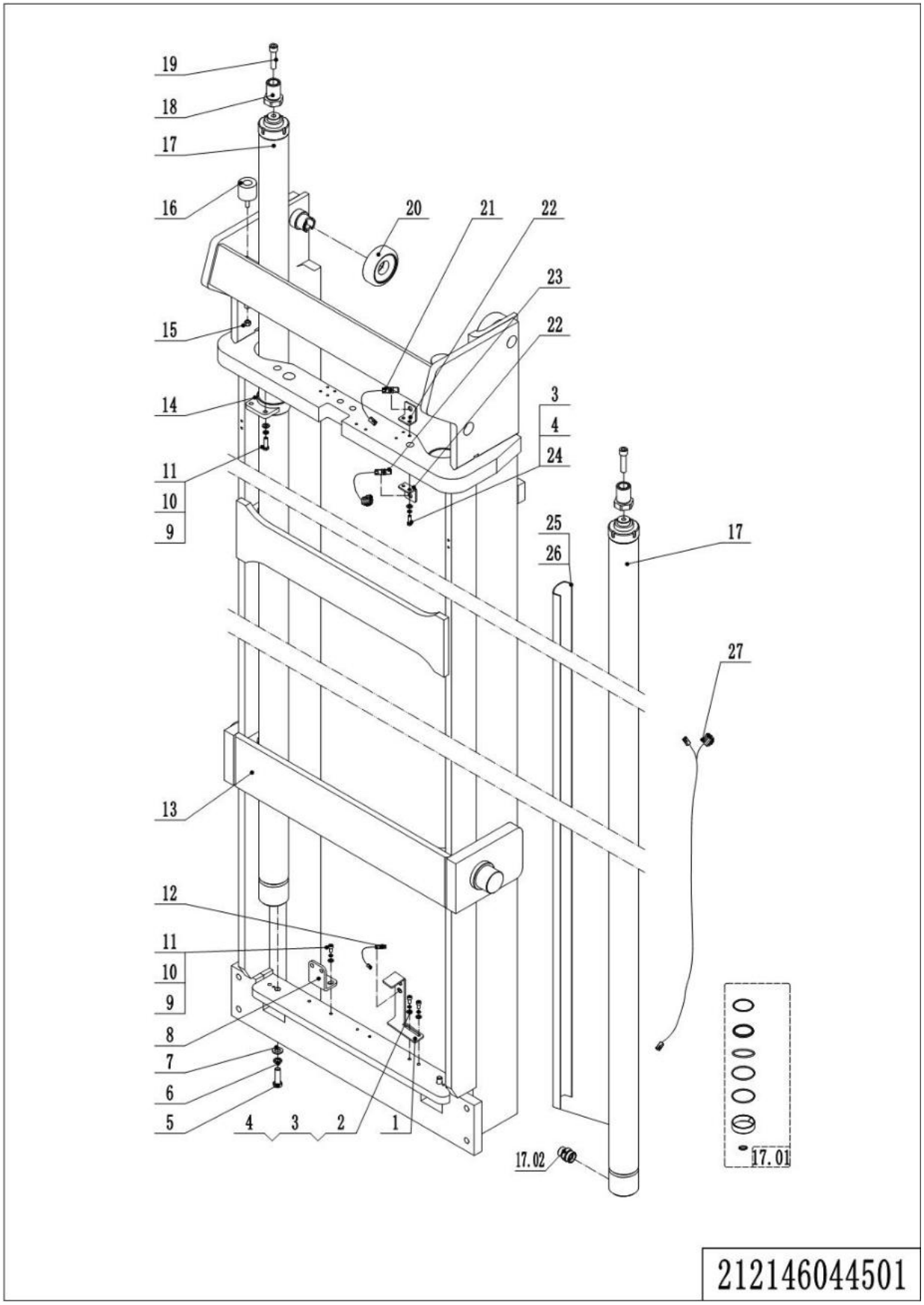

1= Supply as package. 2= Supply with constraints. 3= Phasing-out supply. 4= Supply as assembly. 5= Check other tables.

01Outer Mast(212146044501)Continuation2

No.	Item Code	Mark	Item Description	Qty.	Substitute	Note
27	212133010028		Wire Harness	1		8500
27	212133010029		Wire Harness	1		9000
27	212133010017		Wire Harness	1		9500

02 Middle Mast (212146044502)

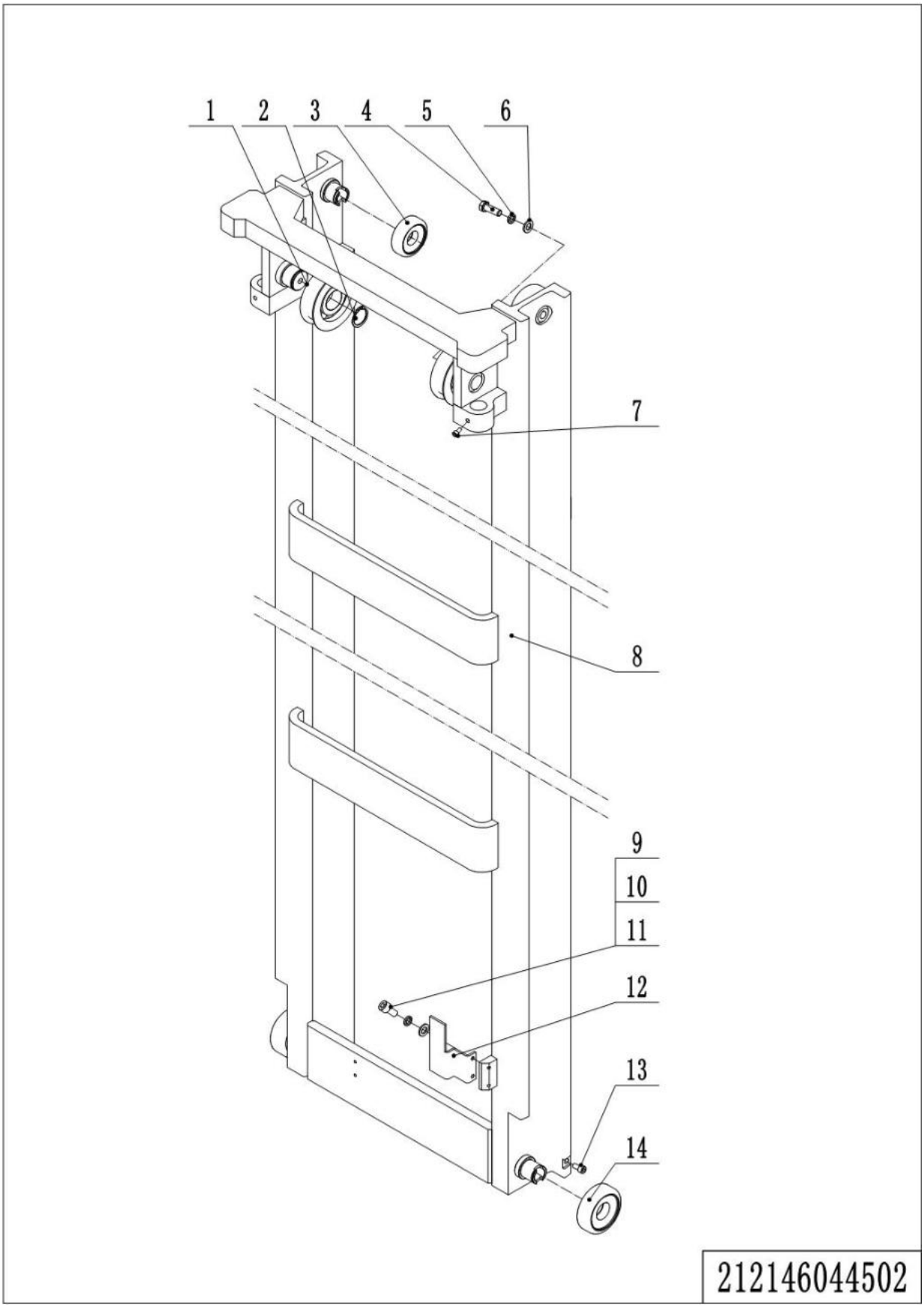

1= Supply as package. 2= Supply with constraints. 3= Phasing-out supply. 4= Supply as assembly. 5= Check other tables.

02 Middle Mast (212146044502)

No.	Item Code	Mark	Item Description	Qty.	Substitute	Note
1	940200500001		Sprocket Bearing	2		
2	910401300020		Circlip	2		
3	940200300046		Compound Roller	2		
4	910100300051		Bolt	1		
5	910400500008		Spring Washer	1		
6	910400100008		Flat Washer	1		
7	910200900014		Screw	2		
8	212144510020		Middle Mast(4500)	1		4500
8	212144510021		Middle Mast(5000)	1		5000
8	212144510022		Middle Mast(5500)	1		5500
8	212144510023		Middle Mast(6000)	1		6000
8	212144510024		Middle Mast(6500)	1		6500
8	212144510025		Middle Mast(7000)	1		7000
8	212144510026		Middle Mast(7500)	1		7500
8	212144510027		Middle Mast(8000)	1		8000
8	212144510028		Middle Mast(8500)	1		8500
8	212144510029		Middle Mast(9000)	1		9000
8	212144510030		Middle Mast(9500)	1		9500
9	910200200036		Screw	2		
10	910400500005		Spring Washer	2		
11	910400100005		Flat Washer	2		
12	212144520066		Fixing Plate	1		
13	910200200096		Screw	2		
14	940200300052		Compound Roller	2		

1= Supply as package. 2= Supply with constraints. 3= Phasing-out supply. 4= Supply as assembly. 5= Check other tables.

03Inner Mast (212146044503)

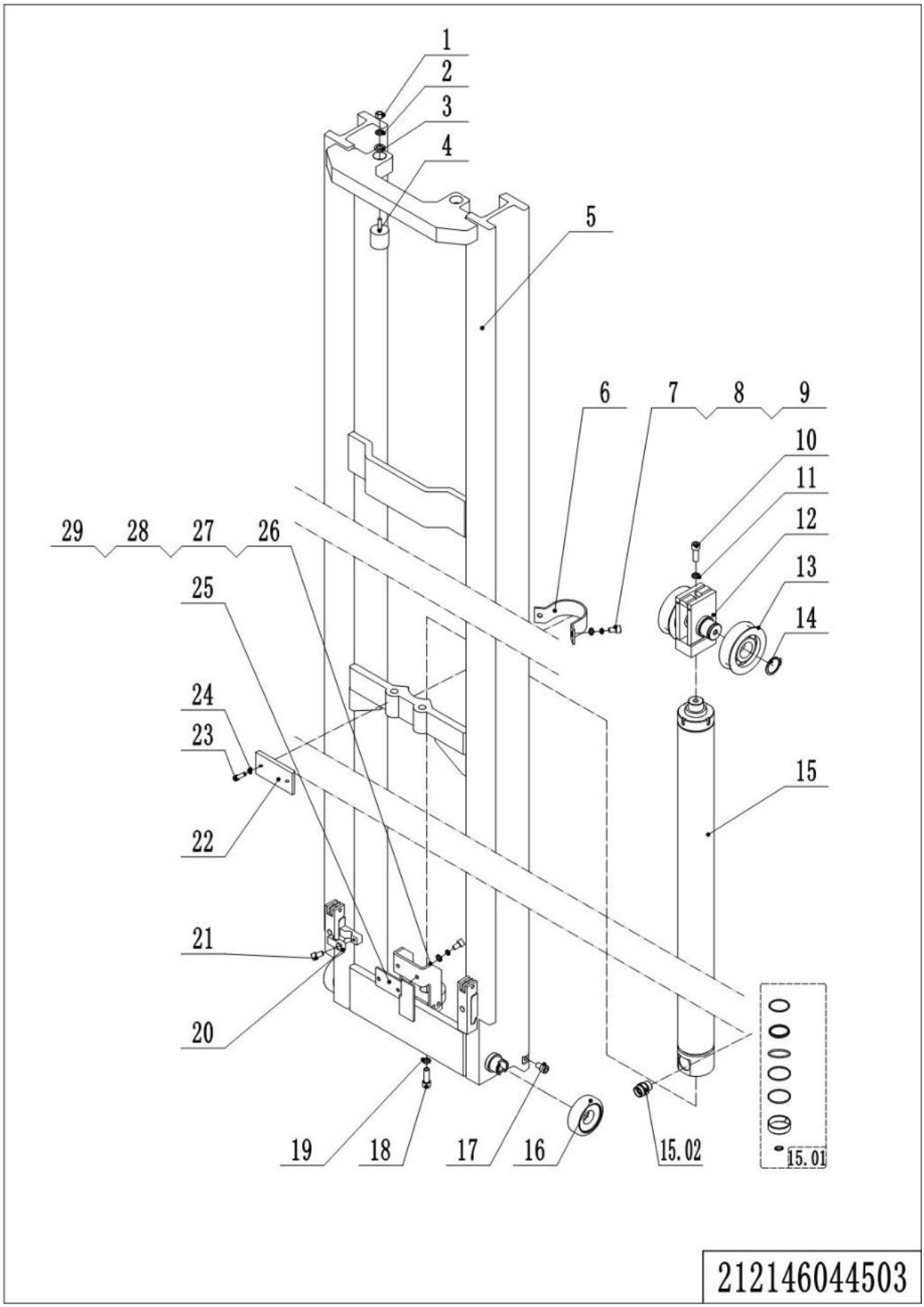

1= Supply as package. 2= Supply with constraints. 3= Phasing-out supply. 4= Supply as assembly. 5= Check other tables.

03Inner Mast(212146044503)

No.	Item Code	Mark	Item Description	Qty.	Substitute	Note
1	910300500004	1	Nut	2		
2	910400500006	1	Spring Washer	3		
3	910400100006	1	Flat Washer	2		
4	212144520242		Crash Pad	2		
5	212144510035		Inner Mast(4500)	1		4500
5	212144510036		Inner Mast(5000)	1		5000
5	212144510037		Inner Mast(5500)	1		5500
5	212144510038		Inner Mast(6000)	1		6000
5	212144510039		Inner Mast(6500)	1		6500
5	212144510040		Inner Mast(7000)	1		7000
5	212144510041		Inner Mast(7500)	1		7500
5	212144510042		Inner Mast(8000)	1		8000
5	212144510043		Inner Mast(8500)	1		8500
5	212144510044		Inner Mast(9000)	1		9000
5	212144510045		Inner Mast(9500)	1		9500
6	212144520068		Fixing Plate	1		
7	910100200005	1	Bolt	2		
8	910400500007	1	Spring Washer	2		
9	910400100007	1	Flat Washer	2		
10	910200200099	1	Screw	2		
11	910400500008	1	Spring Washer	4		
12	212144510049		Yoke	1		
13	940200500001		Sprocket Bearing	2		
14	910401300020	1	Circlip	2		
15	212144510070		Cylinder	1		4500
15	212144510071		Cylinder	1		5000
15	212144510072		Cylinder	1		5500
15	212144510073		Cylinder	1		6000
15	212144510074		Cylinder	1		6500
15	212144510075		Cylinder	1		7000

1= Supply as package. 2= Supply with constraints. 3= Phasing-out supply. 4= Supply as assembly. 5= Check other tables.

03Inner Mast (212146044503)Continuation

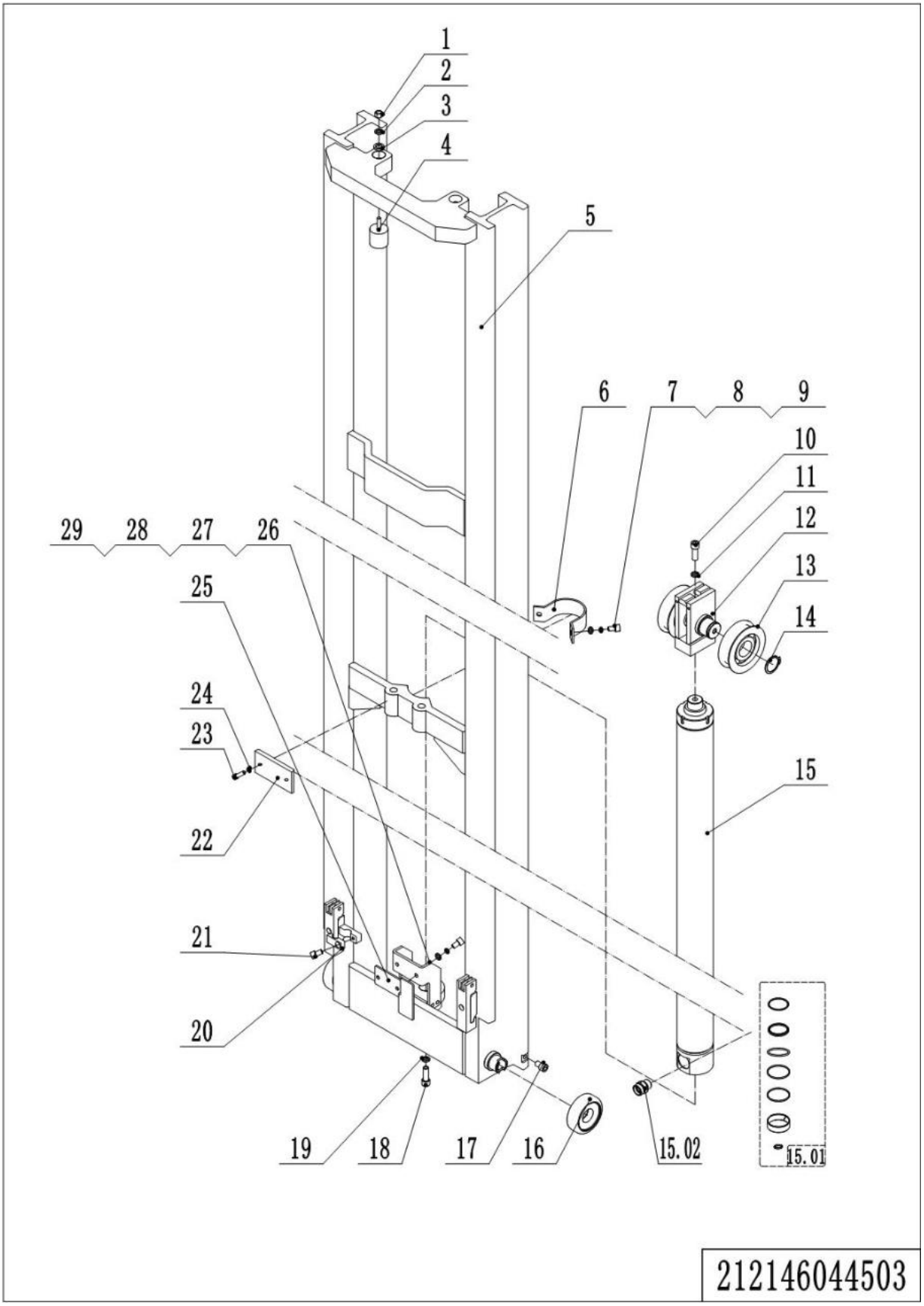

1= Supply as package. 2= Supply with constraints. 3= Phasing-out supply. 4= Supply as assembly. 5= Check other tables.

03Inner Mast(212146044503)Continuation

No.	Item Code	Mark	Item Description	Qty.	Substitute	Note
15	212144510076		Cylinder	1		7500
15	212144510077		Cylinder	1		8000
15	212144510078		Cylinder	1		8500
15	212144510079		Cylinder	1		9000
15	212144510080		Cylinder	1		9500
15.01	212198510003		Seal Kit	1		
15.02	212198520036		Anti-explosion Valve	1		
16	940200300046		Compound Roller	2		
17	910200200096	1	Screw	2		
18	910100200005	1	Bolt	1		
19	910400100008	1	Flat Washer	1		
20	213044520110		Pipe Clip	1		
21	910200200055	1	Screw	1		
22	212144520236		Press Plate	1		
23	910200500051	1	Screw	2		
24	910400500005	1	Spring Washer	2		
25	212144520298		Mounting Plate	1		
26	212144520049		Mounting Base	1		
27	910400100006	1	Flat Washer	2		
28	910400500006	1	Spring Washer	2		
29	910200200058	1	Screw	2		

1= Supply as package. 2= Supply with constraints. 3= Phasing-out supply. 4= Supply as assembly. 5= Check other tables.

04Reach Frame(213146044501)

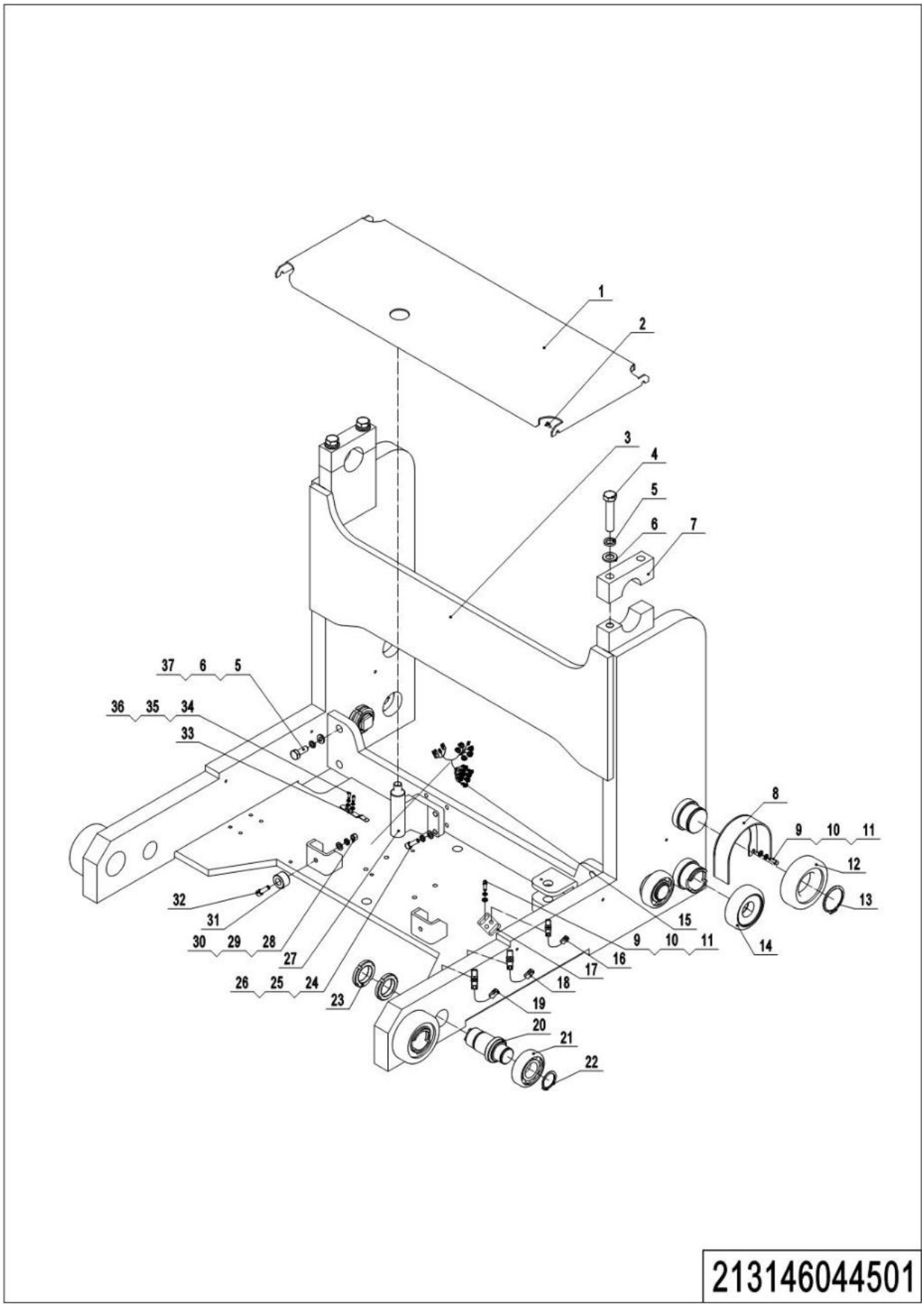

1= Supply as package. 2= Supply with constraints. 3= Phasing-out supply. 4= Supply as assembly. 5= Check other tables.

04Reach Frame(213146044501)

No.	Item Code	Mark	Item Description	Qty.	Substitute	Note
1	213144520001		Close Plate	1		
2	910100300010	1	Bolt	4		
3	213144510001		Frame	1		
4	910100200017	1	Bolt	4		
5	910400100010	1	Flat Washer	8		
6	910400500010	1	Spring Washer	8		
7	212144520217		Fixing Plate	2		
8	212144510081		Protective Cover	2		
9	910200200036	1	Screw	10		
10	910400100005	1	Flat Washer	10		
11	910400500005	1	Spring Washer	10		
12	940200100042		Main Roller	2		
13	910401300026	1	Circlip	6		
14	940200300042		Compound Roller	4		
15	212133010015		Wire Harness	1		
16	212133510002		Proximity Switch	1		
17	212144520235		Fixing Plate	3		
18	212133510003		Proximity Switch	1		
19	212133510004		Proximity Switch	1		
20	212144520218		Axle	4		
21	940200100008		Main Roller	4		
22	910401300018	1	Circlip	4		
23	910300800008		Nut	8		
24	910200200079	1	Screw	4		
25	910400100007	1	Flat Washer	4		
26	910400500007	1	Spring Washer	4		
27	212144510051		Fixing Base	1		
28	910300500004	1	Nut	2		
29	910400100006	1	Flat Washer	8		
30	910400500006	1	Spring Washer	8		

1= Supply as package. 2= Supply with constraints. 3= Phasing-out supply. 4= Supply as assembly. 5= Check other tables.

04Reach Frame(213146044501)Continuation

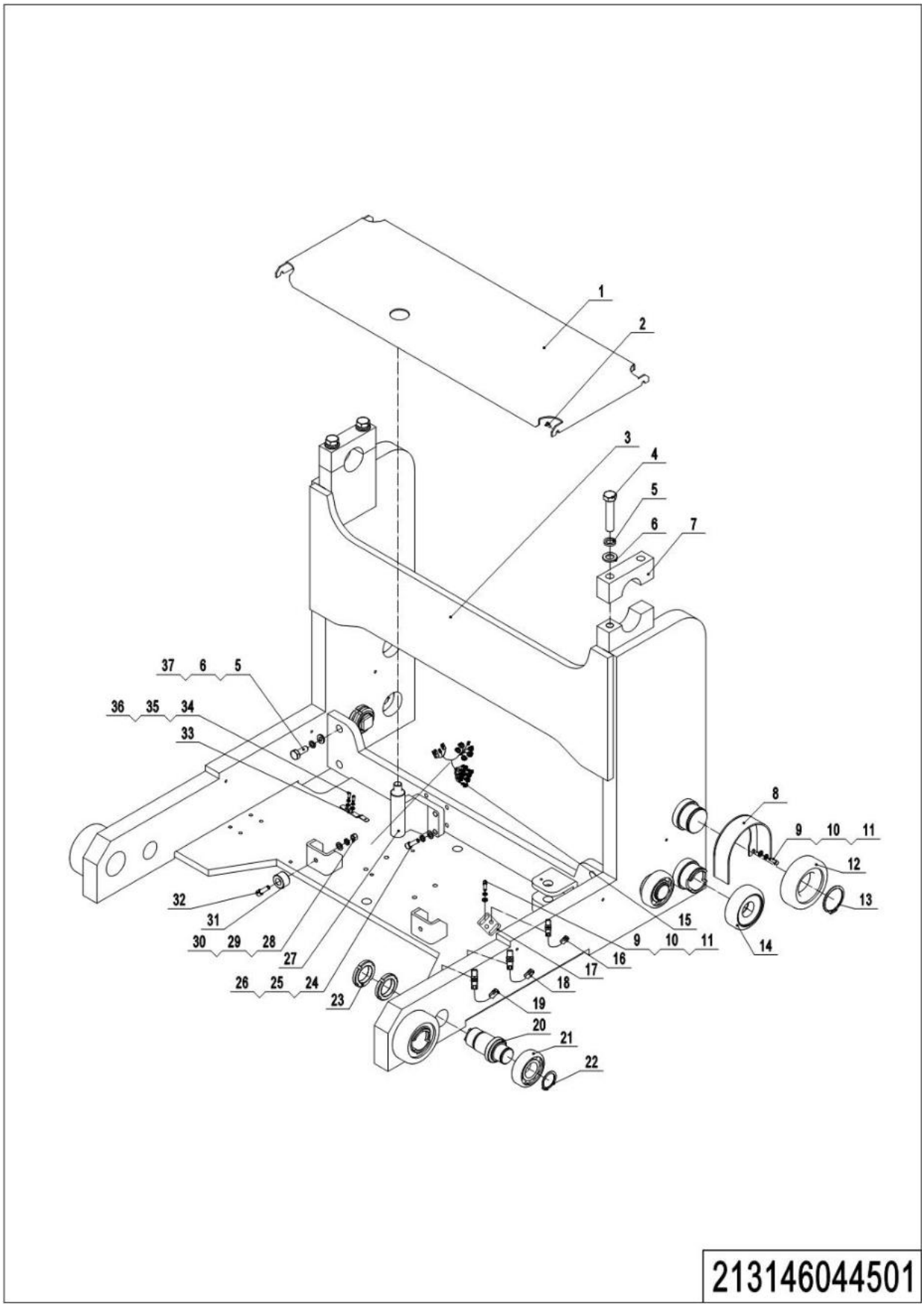

1= Supply as package. 2= Supply with constraints. 3= Phasing-out supply. 4= Supply as assembly. 5= Check other tables.

04Reach Frame(213146044501)Continuation

No.	Item Code	Mark	Item Description	Qty.	Substitute	Note
31	532621520062		Crash Pad	2		
32	910200200060	1	Screw	2		
33	921300300005		Holder	9		
34	910200500037	1	Screw	18		
35	910400500004	1	Spring Washer	18		
36	910400100004	1	Flat Washer	18		
37	910100200014	1	Bolt	4		

1= Supply as package. 2= Supply with constraints. 3= Phasing-out supply. 4= Supply as assembly. 5= Check other tables.

05Fork Carriage(213146044502)

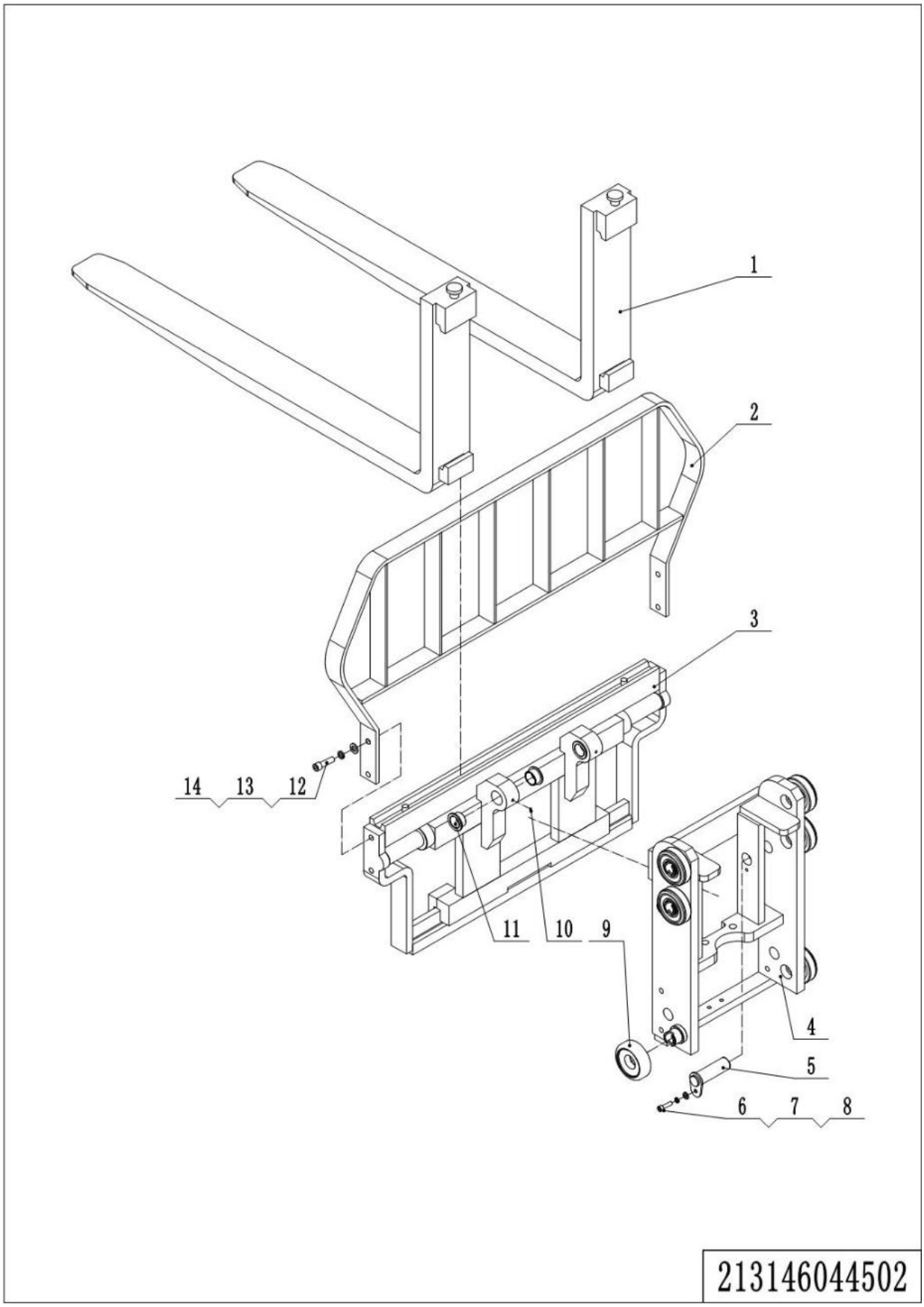

1= Supply as package. 2= Supply with constraints. 3= Phasing-out supply. 4= Supply as assembly. 5= Check other tables.

05Fork Carriage(213146044502)

No.	Item Code	Mark	Item Description	Qty.	Substitute	Note
1	940100100008		Fork120x40x1070	2		
1	940100100010		Fork120x40x1150	2		
1	940100100009		Fork120x40x1220	2		
1	940100100011		Fork120x40x1370	2		
1	940100100012		Fork120x40x1520	2		
1	940100100056		Fork120x40x1070 -side hole	2		Wireless Monitor
1	940100100058		Fork120x40x1150-side hole	2		Wireless Monitor
1	940100100059		Fork120x40x1220-side hole	2		Wireless Monitor
1	940100100060		Fork120x40x1370-side hole	2		Wireless Monitor
1	940100100061		Fork120x40x1520-side hole	2		Wireless Monitor
2	212140510000		Load Backrest	1		
3	940100200006		Side Shifter	1		
4	212138010000		Carriage	1		
5	212138010003		Pin	2		
6	910200300025	1	Screw	2		
7	910400100006	1	Flat Washer	2		
8	910400500019	1	Spring Washer	2		
9	940200300040		Compound Roller	6		
10	911200100002		Oil Cup	2		
11	940500400013		Bearing	4		
12	910100300050	1	Bolt	4		
13	910400500008	1	Spring Washer	4		
14	910400100008	1	Flat Washer	4		

1= Supply as package. 2= Supply with constraints. 3= Phasing-out supply. 4= Supply as assembly. 5= Check other tables.

06Mast Hydraulic(212146044506)

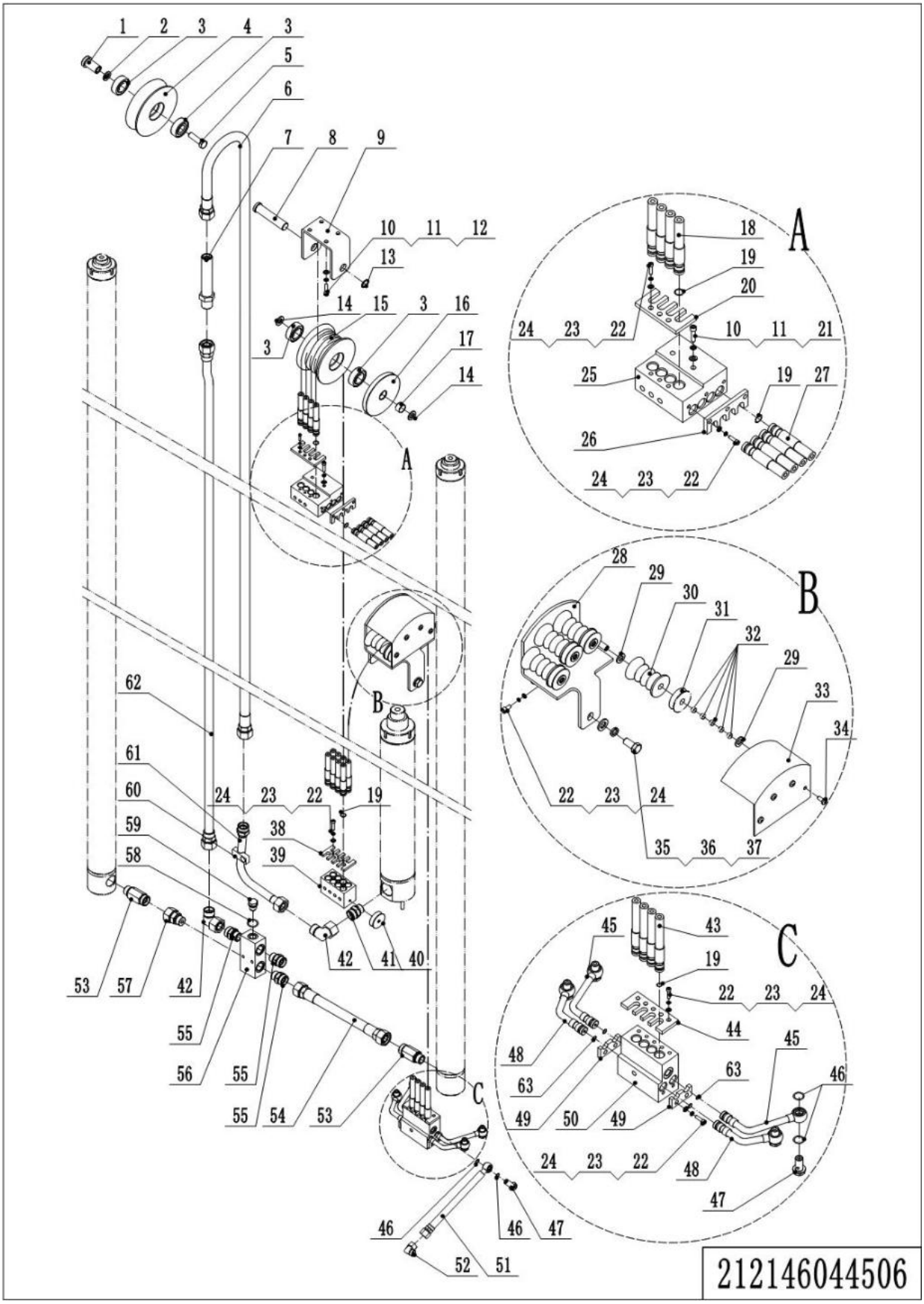

1= Supply as package. 2= Supply with constraints. 3= Phasing-out supply. 4= Supply as assembly. 5= Check other tables.

06Mast Hydraulic(212146044506)

No.	Item Code	Mark	Item Description	Qty.	Substitute	Note
1	212144520051		Pin	1		
2	212144520052		Washer	1		
3	910700200019		Bearing	4		
4	212144520050		Pulley	1		
5	910100300057	1	Bolt	1		
6	212144520130		Hose	1		4500
6	212144520131		Hose	1		5000
6	212144520132		Hose	1		5500
6	212144520133		Hose	1		6000
6	212144520134		Hose	1		6500
6	212144520135		Hose	1		7000
6	212144520136		Hose	1		7500
6	212144520137		Hose	1		8000
6	212144520138		Hose	1		8500
6	212144520139		Hose	1		9000
6	212144520140		Hose	1		9500
7	950400500003		Joint	1		
8	212144520057		Pin	1		
9	212144520044		Mounting Base	1		
10	910400100006	1	Flat Washer	10		
11	910400500006	1	Spring Washer	15		
12	910200200058	1	Screw	13		
13	910401300011	1	Circlip	1		
14	212144520056		Washer	2		
15	212144520053		Pulley	1		
16	212144520054		Pulley	1		
17	940500100016		Bushing	1		
18	212144520100		Hose	4		4500
18	212144520101		Hose	4		5000
18	212144520102		Hose	4		5500

1= Supply as package. 2= Supply with constraints. 3= Phasing-out supply. 4= Supply as assembly. 5= Check other tables.

06Mast Hydraulic(212146044506)Continuation1

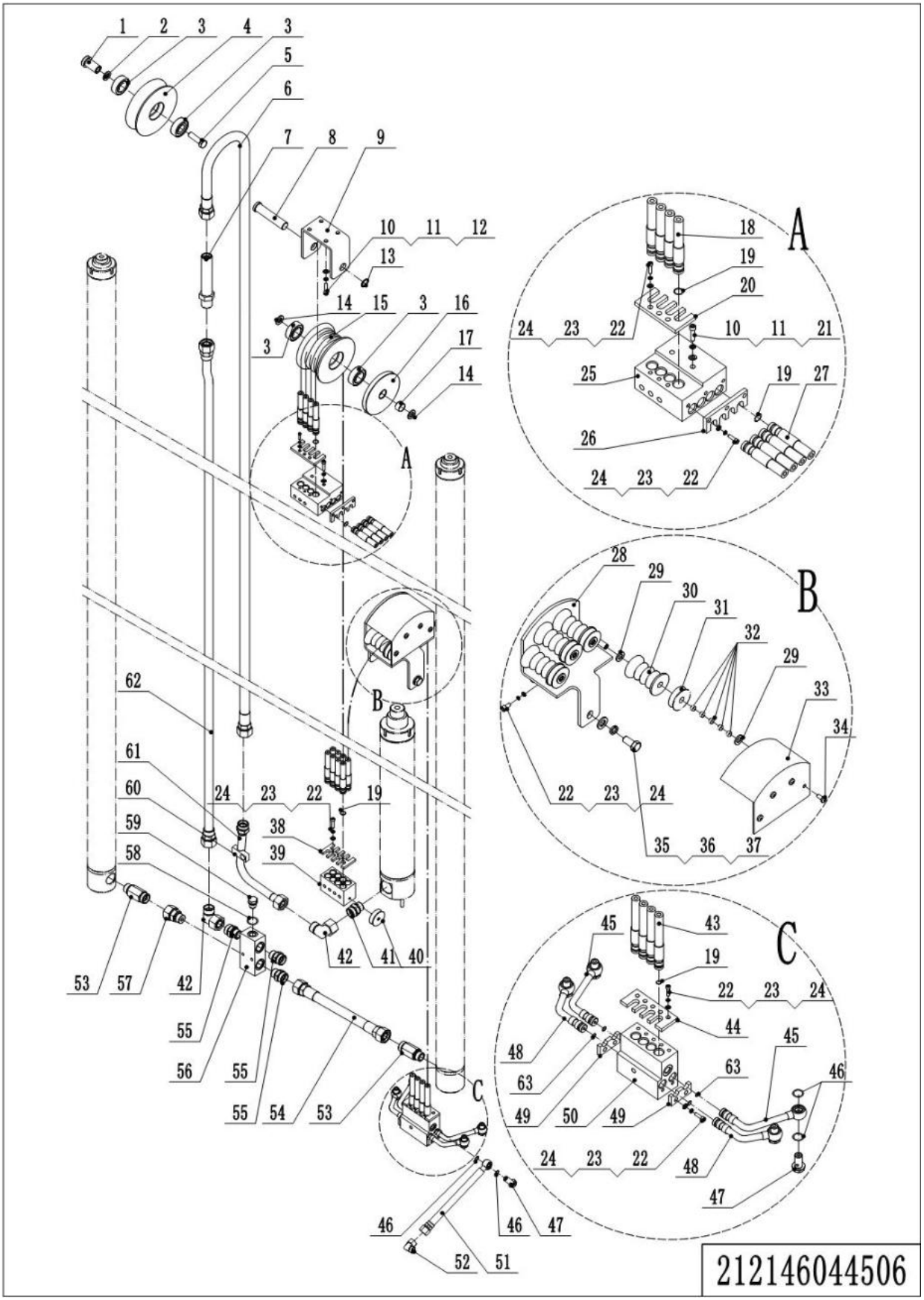

1= Supply as package. 2= Supply with constraints. 3= Phasing-out supply. 4= Supply as assembly. 5= Check other tables.

06Mast Hydraulic(212146044506)Continuation1

No.	Item Code	Mark	Item Description	Qty.	Substitute	Note
18	212144520103		Hose	4		6000
18	212144520104		Hose	4		6500
18	212144520105		Hose	4		7000
18	212144520106		Hose	4		7500
18	212144520107		Hose	4		8000
18	212144520108		Hose	4		8500
18	212144520109		Hose	4		9000
18	212144520110		Hose	4		9500
19	910800100124		O-Ring	26		
20	212144520045		Plate	1		
21	910200200062	1	Screw	2		
22	910200200035	1	Screw	16		
23	910400500005	1	Spring Washer	16		
24	910400100005	1	Flat Washer	16		
25	212144520047		Valve Block	1		
26	212144520046		Plate	1		
27	212125020015		Hose	4		4500
27	212125020026		Hose	4		5000
27	212125020027		Hose	4		5500
27	212125020018		Hose	4		6000
27	212125020019		Hose	4		6500
27	212125020020		Hose	4		7000
27	212125020021		Hose	4		7500
27	212125020022		Hose	4		8000
27	212125020023		Hose	4		8500
27	212125020024		Hose	4		9000
27	212125020025		Hose	4		9500
28	212144510047		Wheel Casing	1		
29	910400100007	1	Flat Washer	8		
30	212144520058		Pulley	4		

1= Supply as package. 2= Supply with constraints. 3= Phasing-out supply. 4= Supply as assembly. 5= Check other tables.

06Mast Hydraulic(212146044506)Continuation2

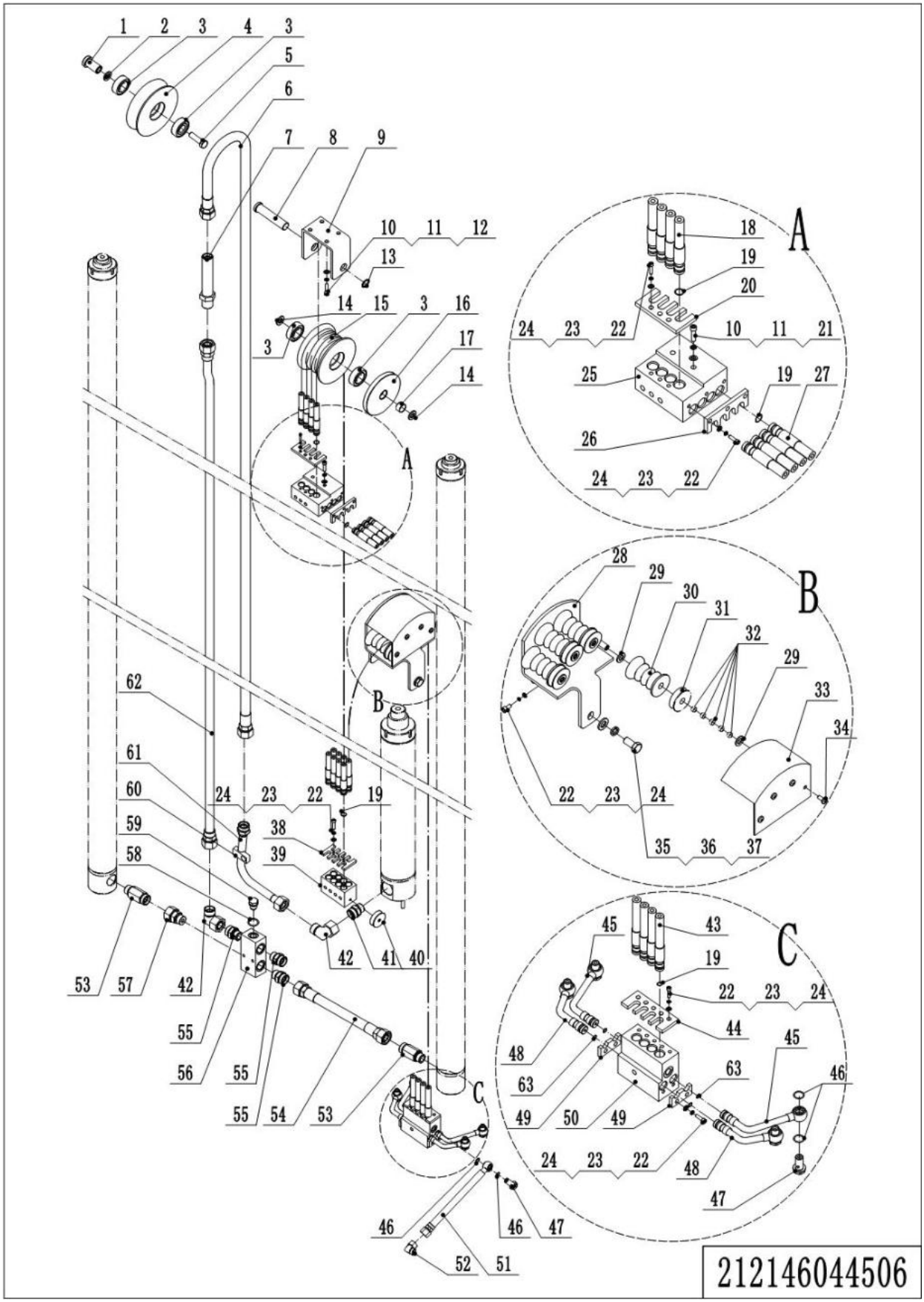

1= Supply as package. 2= Supply with constraints. 3= Phasing-out supply. 4= Supply as assembly. 5= Check other tables.

06Mast Hydraulic4 路(212146044506)Continuation2

No.	Item Code	Mark	Item Description	Qty.	Substitute	Note
31	212144520059		Pulley	4		
32	940500100079		Bushing	20		
33	212144510046		Wheel Casing	1		
34	910200500052	1	Screw	4		
35	910100300048		Bolt	2		
36	910400500008	1	Spring Washer	3		
37	910400100008	1	Flat Washer	2		
38	212144520040		Plate	1		
39	212144520039		Valve Block	1		
40	212144520037		Pulley	1		
41	212198520036		Anti-explosion Valve	1		
42	950400200006		Joint	2		
43	212144520085		Hose	4		4500
43	212144520086		Hose	4		5000
43	212144520087		Hose	4		5500
43	212144520088		Hose	4		6000
43	212144520089		Hose	4		6500
43	212144520090		Hose	4		7000
43	212144520091		Hose	4		7500
43	212144520092		Hose	4		8000
43	212144520093		Hose	4		8500
43	212144520094		Hose	4		9000
43	212144520095		Hose	4		9500
44	212144520032		Plate	1		
45	212144520033		Steel Tube	2		
46	910800100125		O-Ring	4		
47	212144520042	1	Bolt	4		
48	212144520034		Steel Tube	2		
49	212144520031		Plate	2		
50	212144520030		Valve Block	1		

1= Supply as package. 2= Supply with constraints. 3= Phasing-out supply. 4= Supply as assembly. 5= Check other tables.

06Mast Hydraulic(212146044506)Continuation3

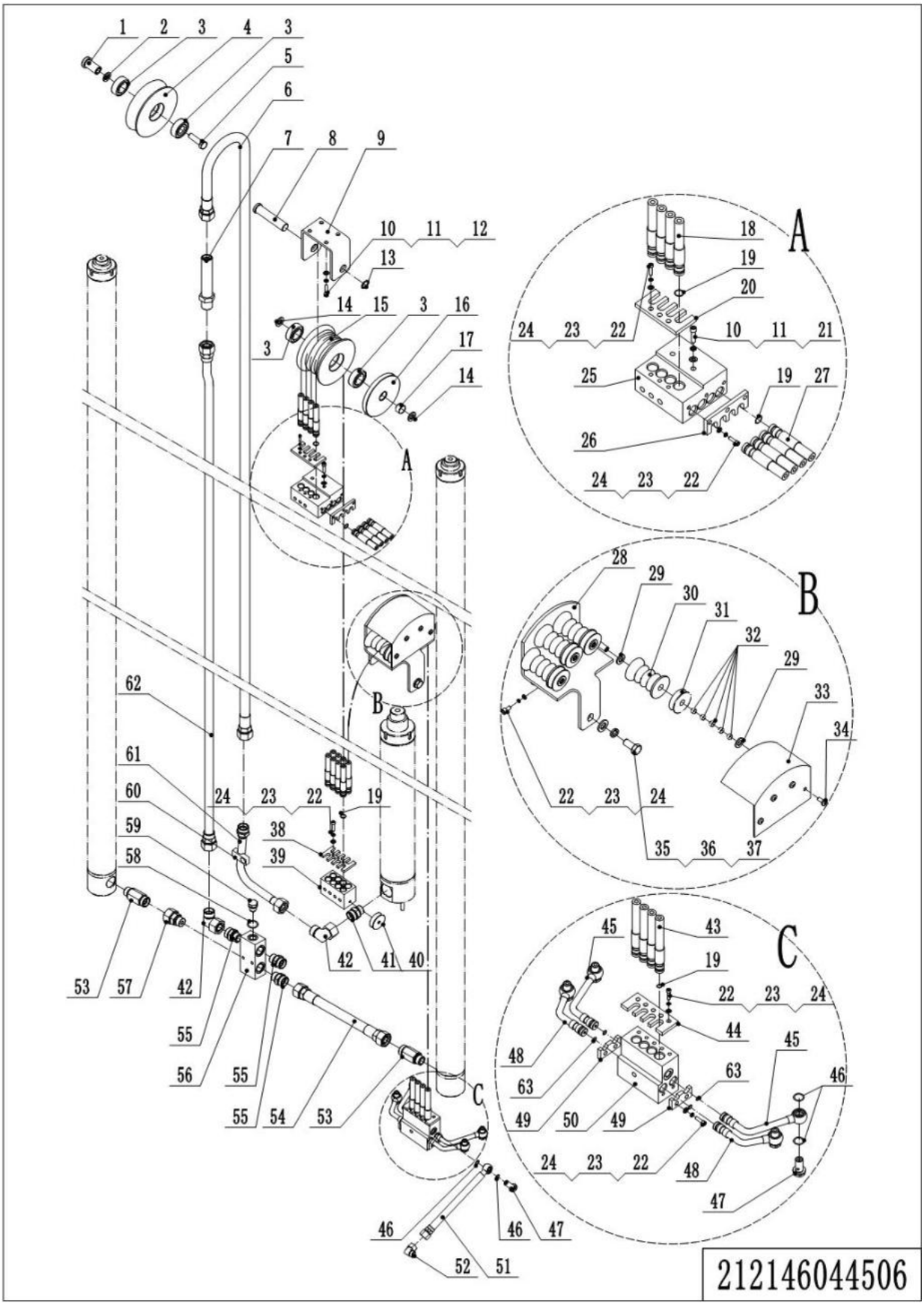

1= Supply as package. 2= Supply with constraints. 3= Phasing-out supply. 4= Supply as assembly. 5= Check other tables.

06Mast Hydraulic(212146044506)Continuation3

No.	Item Code	Mark	Item Description	Qty.	Substitute	Note
51	212144520035		Hose	2		
52	950400200001		Joint	2		
53	212198520022		Anti-explosion Valve	2		
54	212144520036		Hose	1		
55	950400400011		Joint	3		
56	212144520041		Valve Block	1		
57	950400100003		Joint	1		
58	910800900005		Bonded Washer	1		
59	911300100001		Screw Plug	1		
60	213044520110		Pipe Clip	1		
61	212144520048		Steel Tube	1		
62	212144520115		Steel Tube	1		4500
62	212144520116		Steel Tube	1		5000
62	212144520117		Steel Tube	1		5500
62	212144520118		Steel Tube	1		6000
62	212144520119		Steel Tube	1		6500
62	212144520120		Steel Tube	1		7000
62	212144520121		Steel Tube	1		7500
62	212144520122		Steel Tube	1		8000
62	212144520123		Steel Tube	1		8500
62	212144520124		Steel Tube	1		9000
62	212144520125		Steel Tube	1		9500
63	910800100061		O-Ring	4		

1= Supply as package. 2= Supply with constraints. 3= Phasing-out supply. 4= Supply as assembly. 5= Check other tables.

Chapter 5：Steering System, Braking System, Wheels

01Steering Wheel(212146031501)

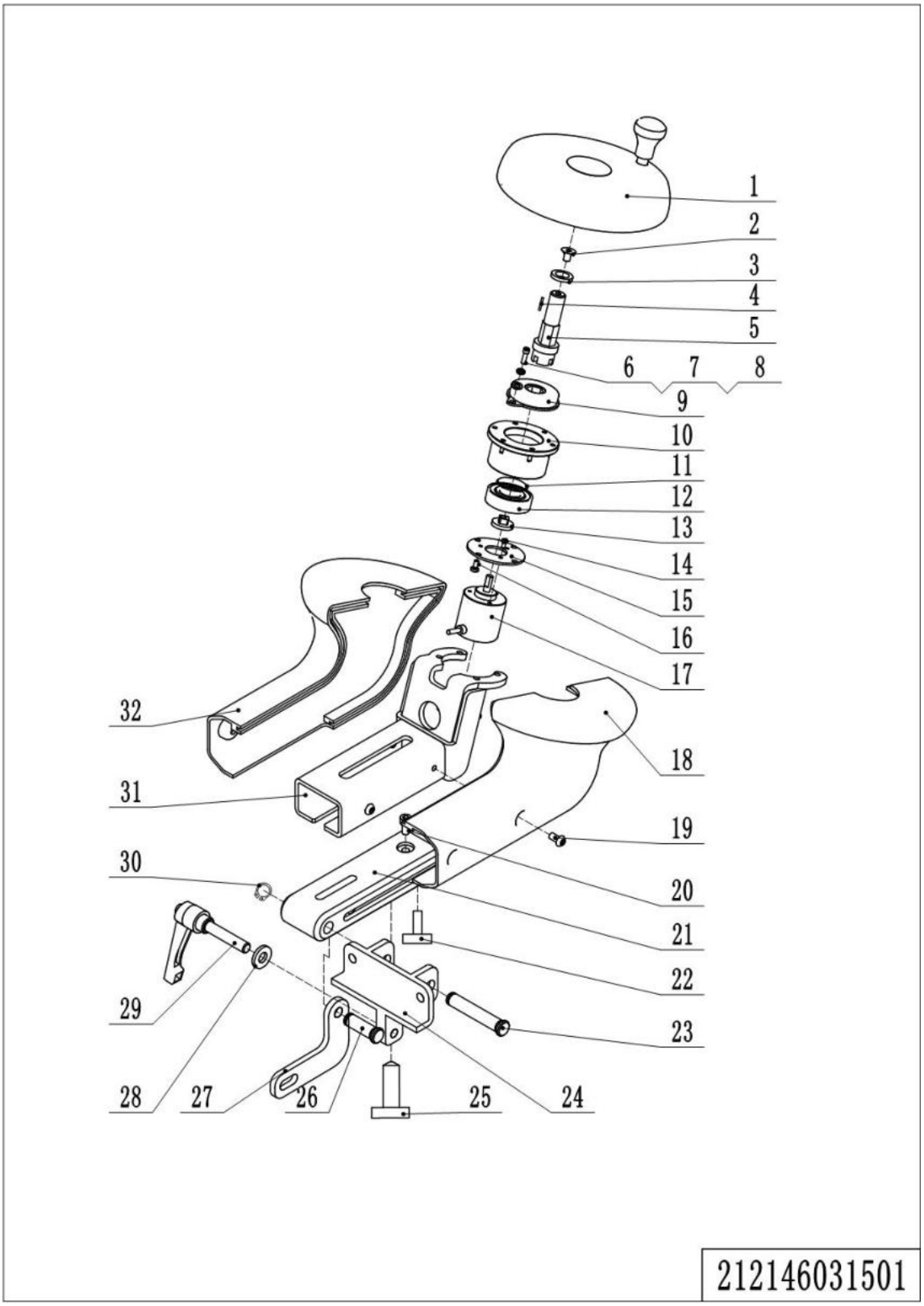

1= Supply as package. 2= Supply with constraints. 3= Phasing-out supply. 4= Supply as assembly. 5= Check other tables.

01Steering Wheel(212146031501)

No.	Item Code	Mark	Item Description	Qty.	Substitute	Note
1	940801700001		Handwheel	1		
2	910200400015	1	Screw	1		
3	212131520006		Washer	1		
4	910600800004		Flat Key	1		
5	212131520005		Axle	1		
6	910200500038	1	Screw	5		
7	910400100004	1	Flat Washer	5		
8	910400500004	1	Spring Washer	5		
9	204010020004		Damper	1		
10	212131520007		Bracket	1		
11	910401400012	1	Circlip	1		
12	910700200004		Bearing	1		
13	505931520002		Link Block	1		
14	910200500009	1	Screw	3		
15	212131520008		Fixing Plate	1		
16	910200500021	1	Screw	4		
17	212131510002		Potentiometer	1		
18	212131520001		Protective Cover	1		
19	910200300017	1	Screw	4		
20	910200200033	1	Screw	1		
21	212131520004		Sliding Block	1		
22	212131520015		Handwheel	1		
23	440517020002		Pin	1		
24	212131510000		Fixing Base	1		
25	212131520015		Handwheel	1		
26	213031540015		Pin	1		
27	212131520003		Fixing Plate	1		
28	212131520002		Washer	1		
29	272031510001		Handle	1		
30	910401300003	1	Circlip	1		

1= Supply as package. 2= Supply with constraints. 3= Phasing-out supply. 4= Supply as assembly. 5= Check other tables.

01Steering Wheel(212146031501)Continuation

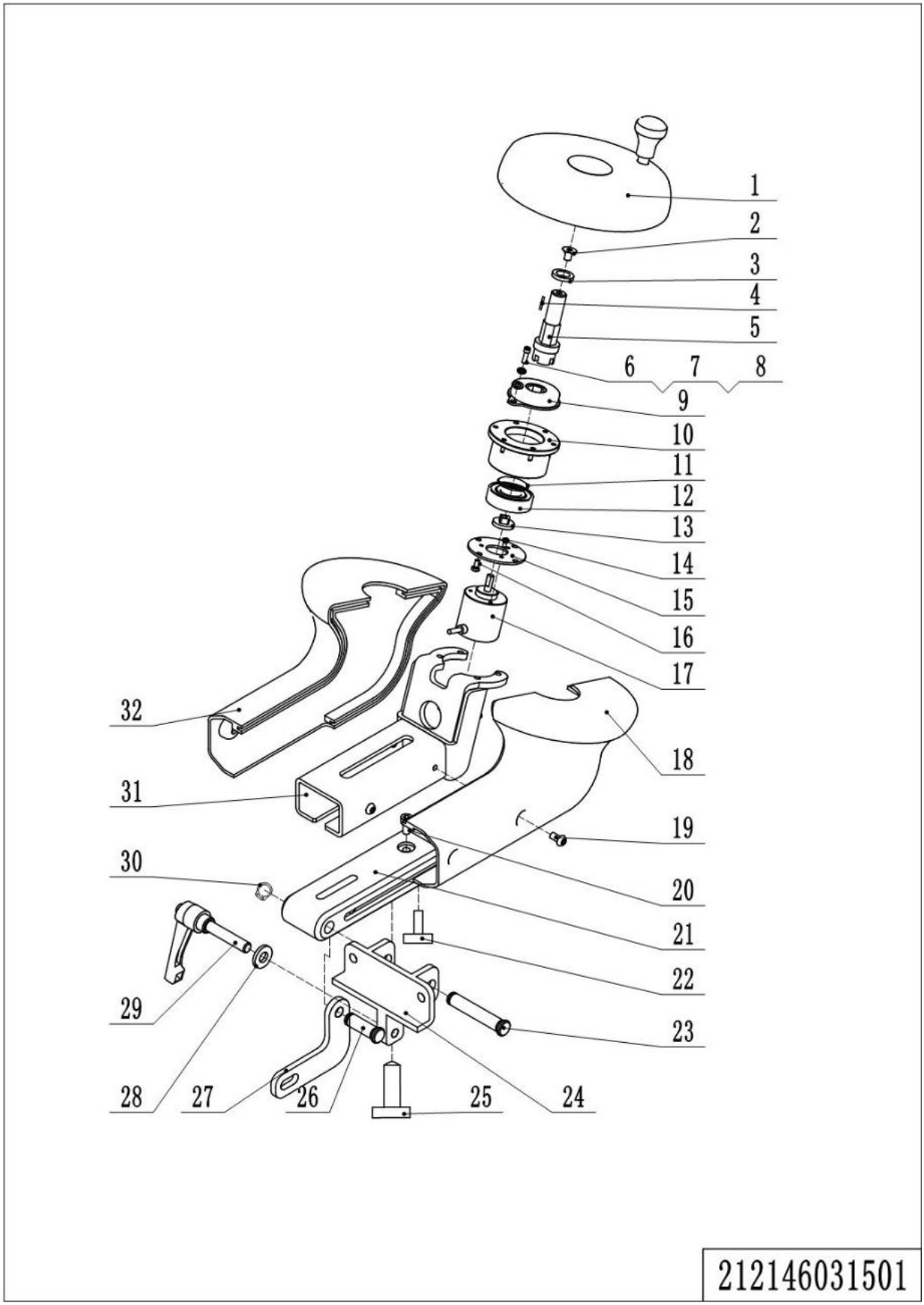

1= Supply as package. 2= Supply with constraints. 3= Phasing-out supply. 4= Supply as assembly. 5= Check other tables.

01Steering Wheel(212146031501)Continuation

No.	Item Code	Mark	Item Description	Qty.	Substitute	Note
31	212131510001		Fixing Base	1		
32	212131520000		Protective Cover	1		

02Brake Unit(213146011501)

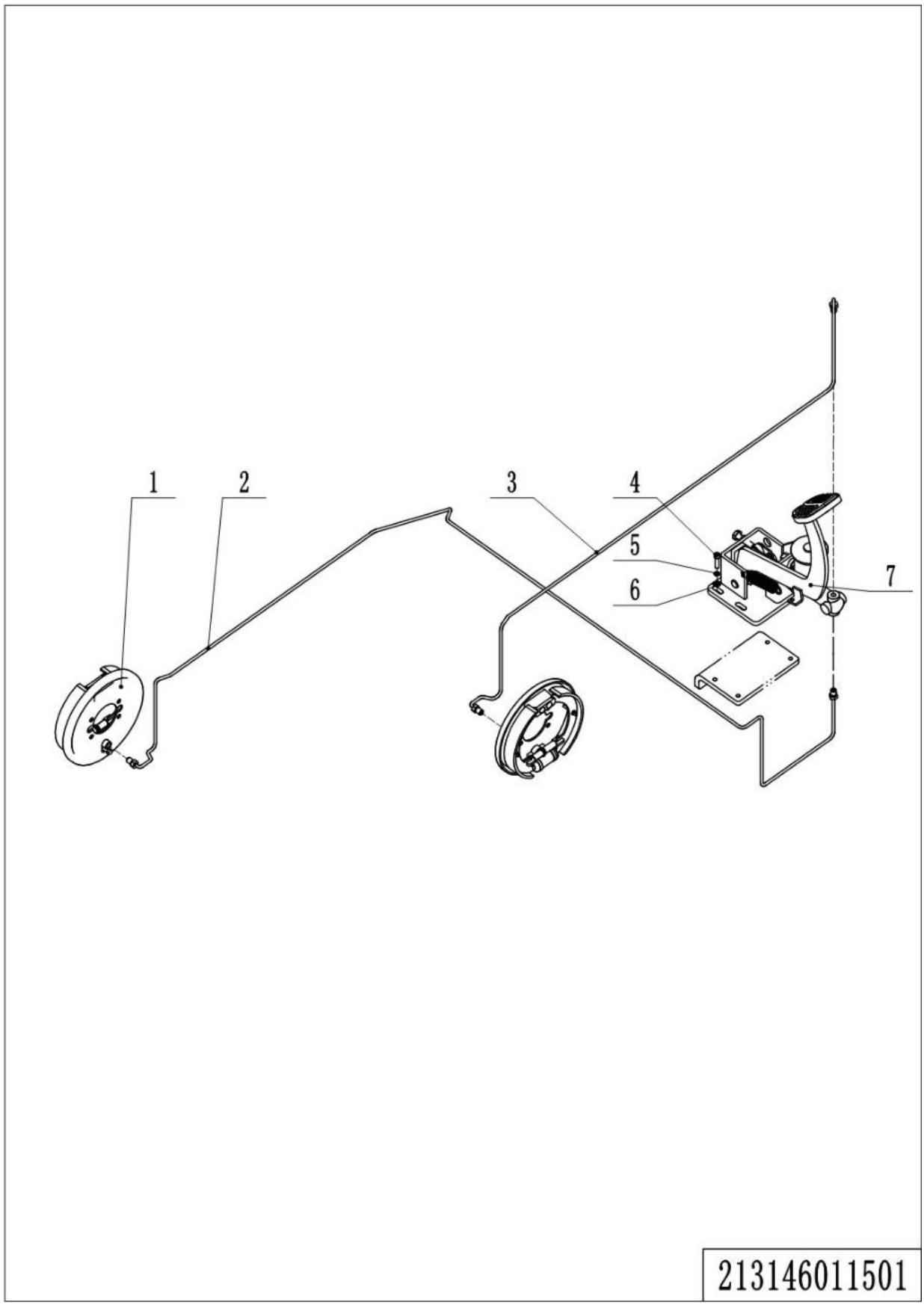

1= Supply as package. 2= Supply with constraints. 3= Phasing-out supply. 4= Supply as assembly. 5= Check other tables.

02Brake Unit(213146011501)

No.	Item Code	Mark	Item Description	Qty.	Substitute	Note
1	940700200003		Brake	2		
2	213111510002		Steel Tube	1		
3	213111510001		Steel Tube	1		
4	910200200058	1	Screw	4		
5	910400500006	1	Spring Washer	4		
6	910400100006	1	Flat Washer	4		
7	212111510000		Foot Brake Assembly	1		212146011502

1= Supply as package. 2= Supply with constraints. 3= Phasing-out supply. 4= Supply as assembly. 5= Check other tables.

03Brake Pedal(212146011502)

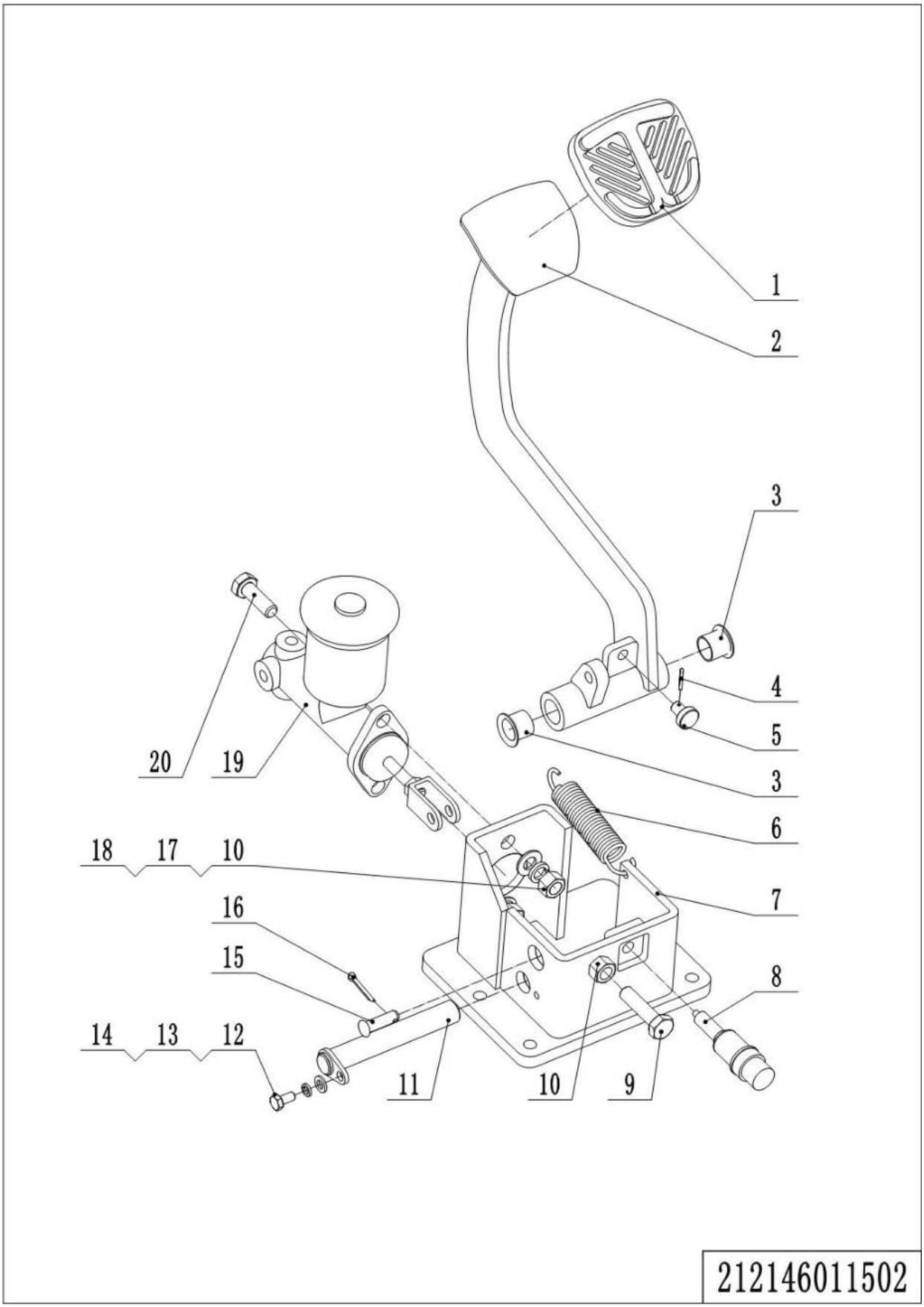

1= Supply as package. 2= Supply with constraints. 3= Phasing-out supply. 4= Supply as assembly. 5= Check other tables.

03Brake Pedal(212146011502)

No.	Item Code	Mark	Item Description	Qty.	Substitute	Note
1	253511520010		Rubber Mat	1		
2	212111510003		Platform	1		
3	940500200016		Bushing	2		
4	910600600011		Cotter Pin	1		
5	251011520015		Crash Pad	1		
6	275211521013		Spring	1		
7	212111510001		Bracket	1		
8	920201000002		Switch	1		
9	910100300039	1	Bolt	1		
10	910300100007	1	Nut	3		
11	212111510002		Pin	1		
12	910400100005	1	Flat Washer	1		
13	910400500005	1	Spring Washer	1		
14	910100300009	1	Bolt	1		
15	910600700026		Pin	1		
16	910600600026		Cotter Pin	1		
17	910400100007	1	Flat Washer	2		
18	910400500007	1	Spring Washer	2		
19	212111510006		Brake Pump	1		
20	910100300037	1	Bolt	2		

1= Supply as package. 2= Supply with constraints. 3= Phasing-out supply. 4= Supply as assembly. 5= Check other tables.

04Load Wheel(213146017001)

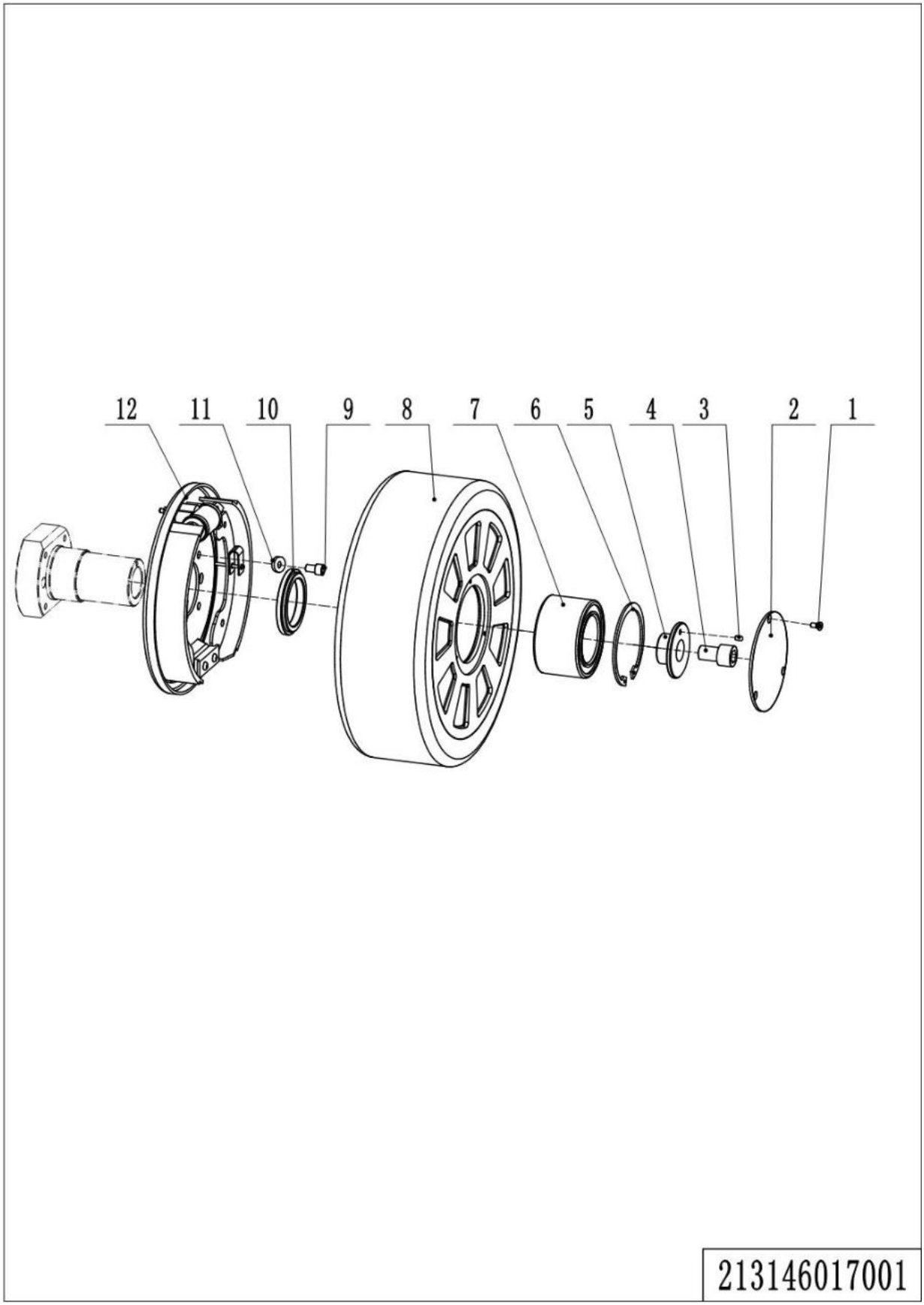

1= Supply as package. 2= Supply with constraints. 3= Phasing-out supply. 4= Supply as assembly. 5= Check other tables.

04Load Wheel(213146017001)

No.	Item Code	Mark	Item Description	Qty.	Substitute	Note
1	910200600016	1	Screw	3		
2	212117020000		Close Plate	1		
3	910600100009		Cylindrical Pin	1		
4	910202500001	1	Screw	1		
5	212117020002		Press Cover	1		
6	910401400024	1	Circlip	1		
7	941101000005		Bearing	1		
8	940300300035		WheelΦ330x110	1		
9	910100300022	1	Bolt	4		
10	212117020001	1	Washer	1		
11	910400100006	1	Flat Washer	4		
12	940700200003		Brake	2		

1= Supply as package. 2= Supply with constraints. 3= Phasing-out supply. 4= Supply as assembly. 5= Check other tables.

Chapter 6：Electrical Parts

01Wire Harness(213146033001)

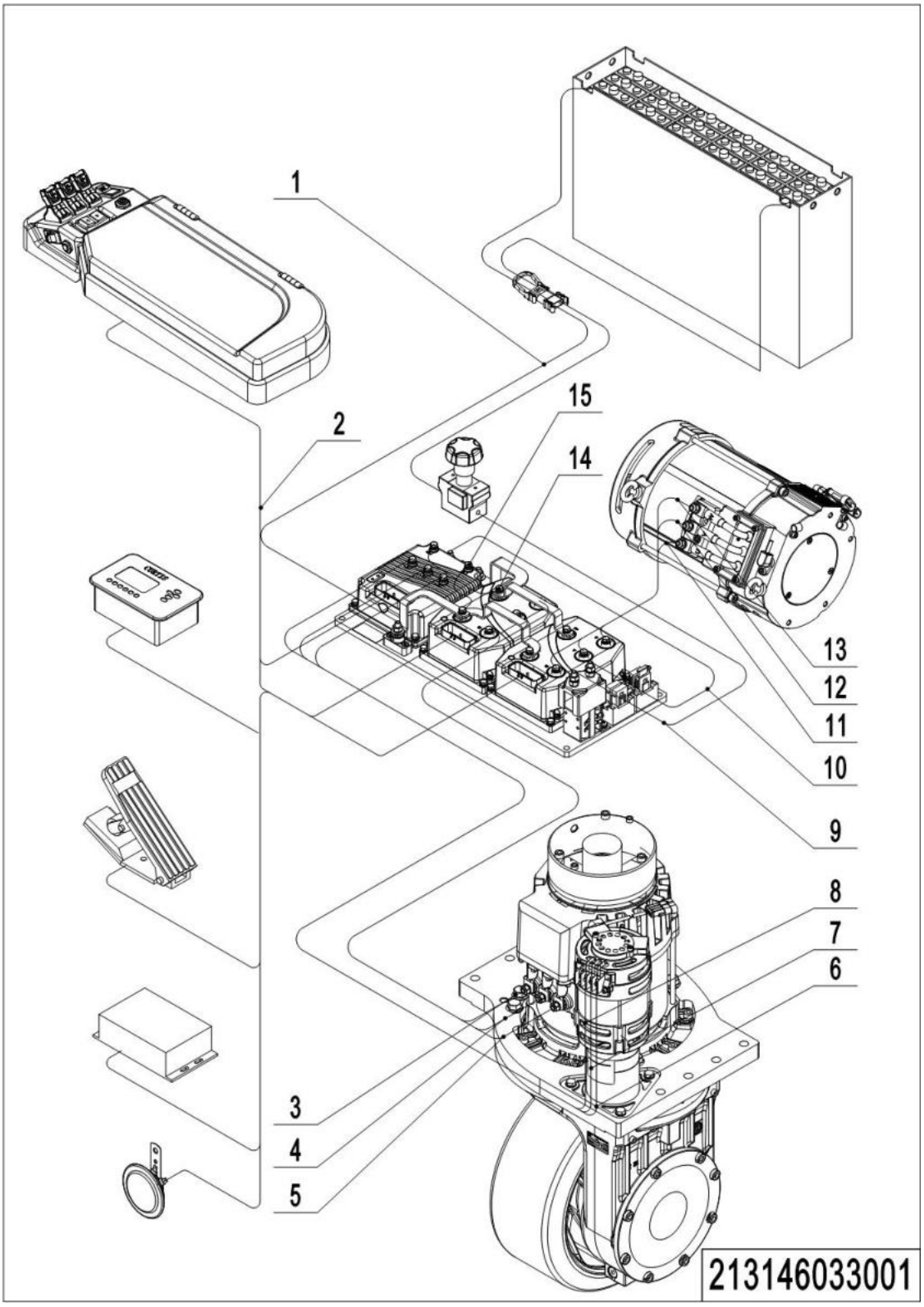

1= Supply as package. 2= Supply with constraints. 3= Phasing-out supply. 4= Supply as assembly. 5= Check other tables.

01Wire Harness(213146033001)

No.	Item Code	Mark	Item Description	Qty.	Substitute	Note
1	213133010001		Wire Harness	1		Lead-acid
1	213133010017		Wire Harness	1		Lithium
2	213133010000		Wire Harness	1		1232SE
2	213133010018		Wire Harness	1		F4A
2	213133010022		Wire Harness	1		EN1175-2020
3	212133010001		Cable	1		
4	212133010002		Cable	1		
5	212133010003		Cable	1		
6	212133010007		Cable	1		
7	212133010008		Cable	1		
8	212133010009		Cable	1		
9	213133010014		Cable	1		
10	213133010015		Cable	1		
11	212133010004		Cable	1		
12	212133010005		Cable	1		
13	212133010006		Cable	1		
14	213033010018		Cable	1		
15	213033010019		Cable	1		

1= Supply as package. 2= Supply with constraints. 3= Phasing-out supply. 4= Supply as assembly. 5= Check other tables.

02Controller(1232SE) (213346033002)

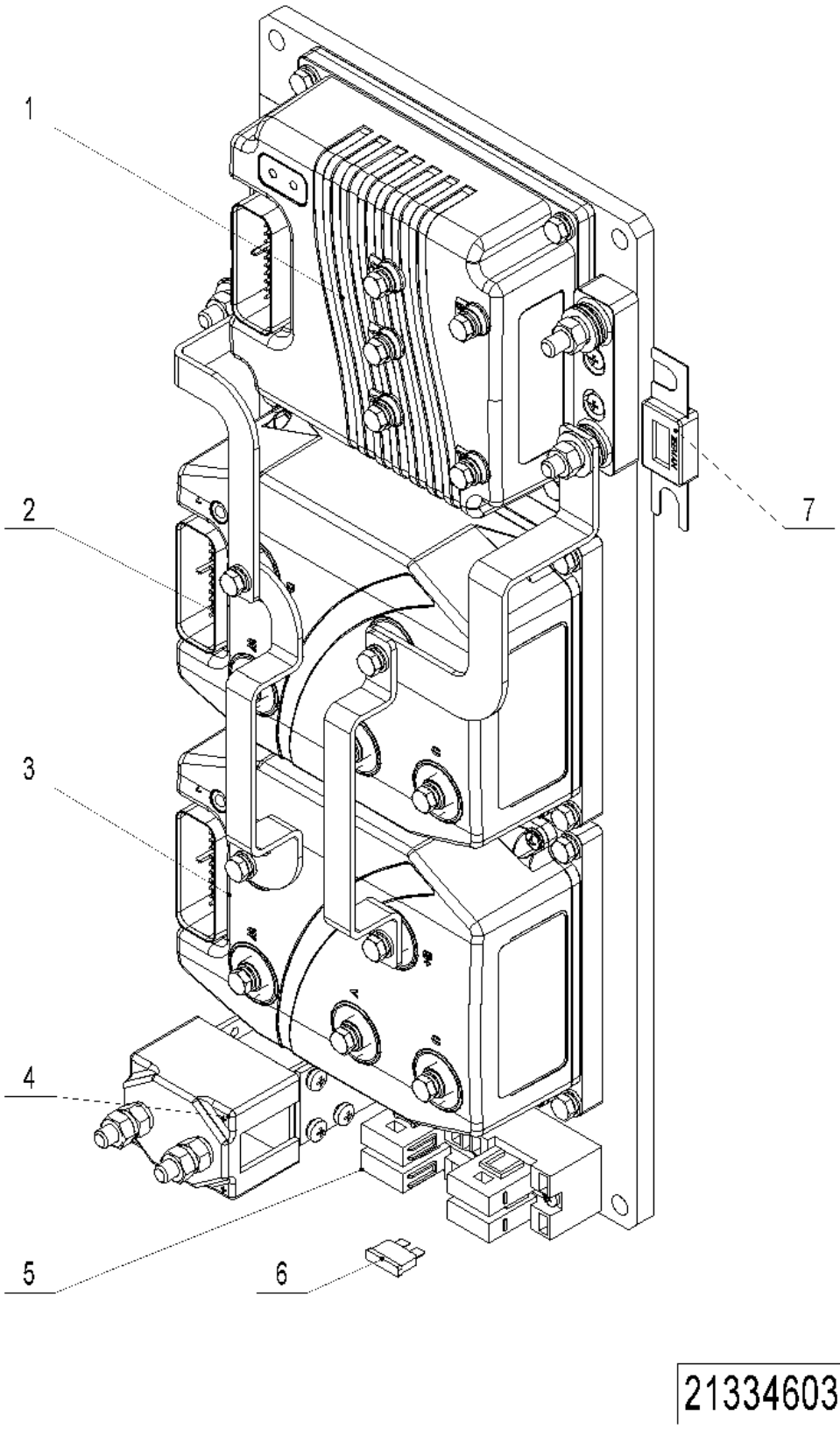

1= Supply as package. 2= Supply with constraints. 3= Phasing-out supply. 4= Supply as assembly. 5= Check other tables.

02Controller(1232SE)(213346033002)

No.	Item Code	Mark	Item Description	Qty.	Substitute	Note
1	921400100004		Controller	1		
2	921400100043		Controller	1		
3	921400100042		Controller	1		
4	920700100008		Contactor	1		
5	920100400004		Fuse Holder	1		
6	920100200002		Fuse	1		
7	920100100014		Fuse	1		

1= Supply as package. 2= Supply with constraints. 3= Phasing-out supply. 4= Supply as assembly. 5= Check other tables.

03Controller(F4A) (213346033003)

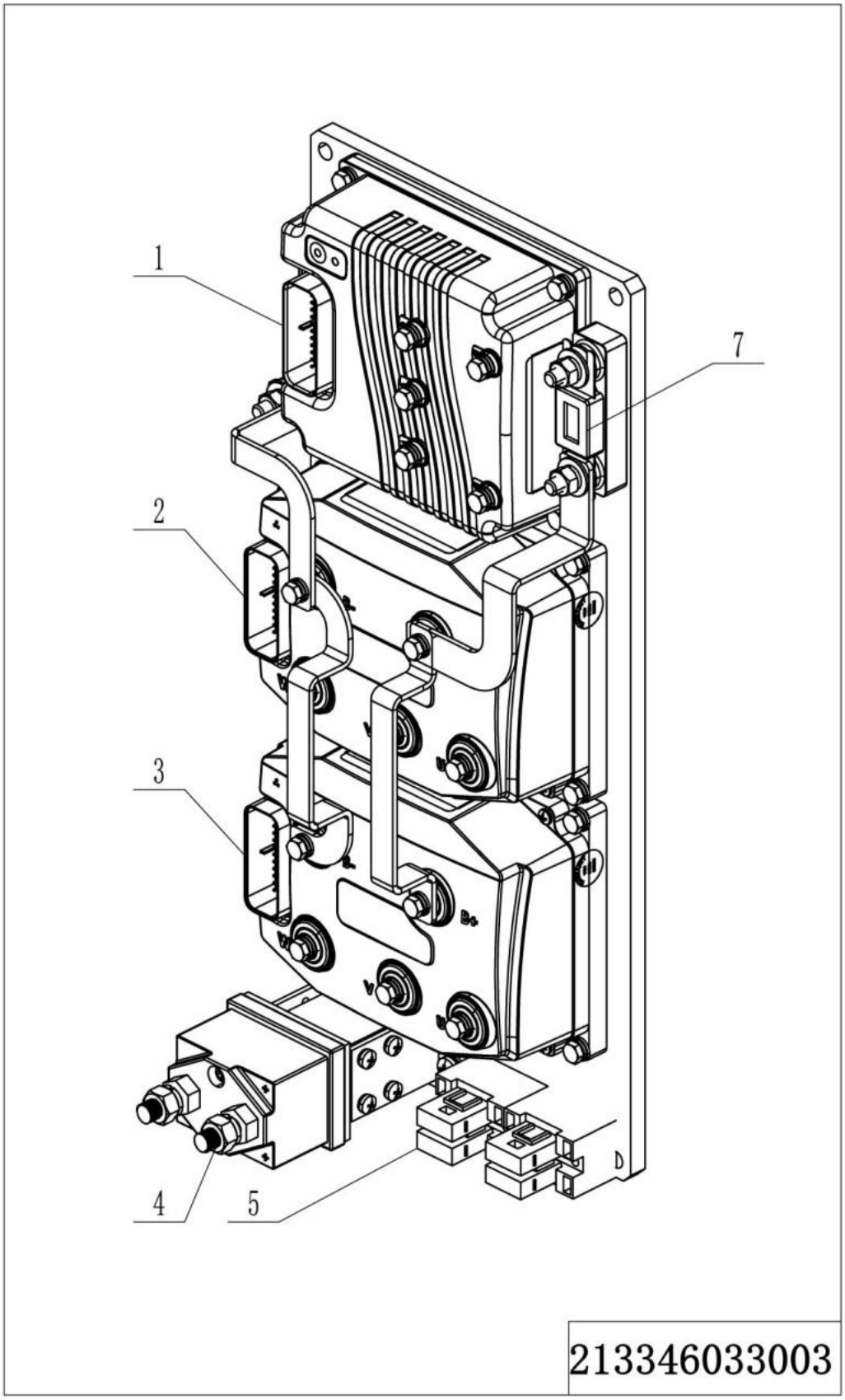

1= Supply as package. 2= Supply with constraints. 3= Phasing-out supply. 4= Supply as assembly. 5= Check other tables.

03Controller(F4A)(213346033003)

No.	Item Code	Mark	Item Description	Qty.	Substitute	Note
1	921400100004		Controller	1		
2	921400100156		Controller	1		
3	921400100157		Controller	1		
4	920700100005		Contactor	1		
5	920100400004		Fuse Holder	2		
6	920100200002		Fuse	4		
7	920100100014		Fuse	1		

1= Supply as package. 2= Supply with constraints. 3= Phasing-out supply. 4= Supply as assembly. 5= Check other tables.

04 Charger (213146036501)

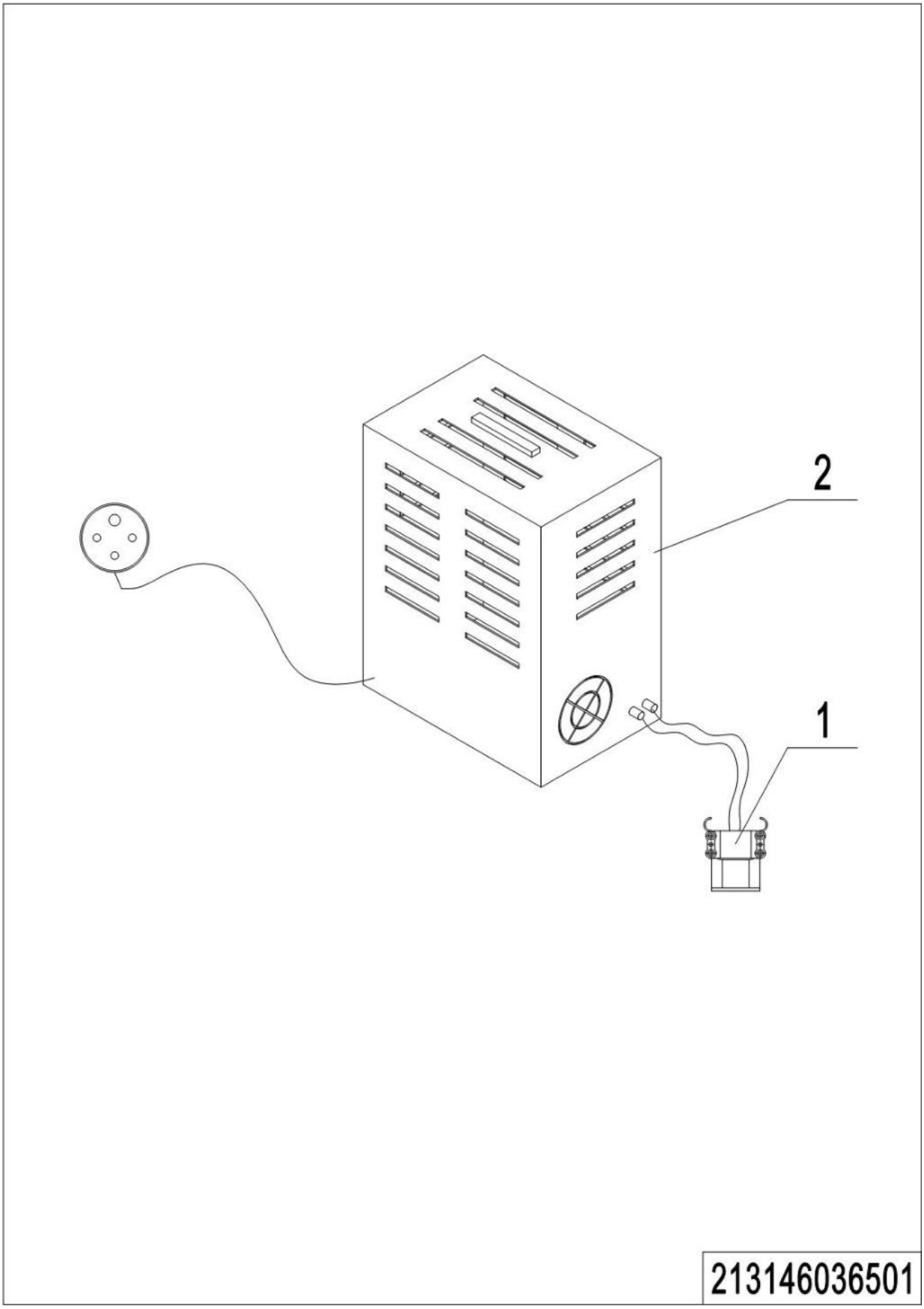

1= Supply as package. 2= Supply with constraints. 3= Phasing-out supply. 4= Supply as assembly. 5= Check other tables.

04 Charger (213146036501)

No.	Item Code	Mark	Item Description	Qty.	Substitute	Note
1	920400100033		Connector	1		Lead Acid
1	920400100037		Connector	1		Lithium
2	921000200079		Charger48V80A(Aisa-CHN)	1		Lead Acid
2	921000200080		Charger48V80A(Aisa-ENG)	1		Lead Acid
2	921000200081		Charger48V80A(EU)	1		Lead Acid
2	921000200082		Charger48V80A(ENG)	1		Lead Acid
2	921000200083		Charger48V80A(AUS)	1		Lead Acid
2	921000200084		Charger48V80A(USA)	1		Lead Acid
2	921000200555		Charger48V80A(380V)	1		Lead Acid
2	921000200560		Charger48V80A(USA220V)	1		Lead Acid
2	921000200401		Charger 48V200A(Aisa-CHN)	1		Lithium
2	921000200481		Charger 48V200A (EU)	1		Lithium
2	921000200406		Charger 48V150A(Aisa-CHN)	1		Lithium
2	921000200451		Charger 48V150A(ZF)	1		Lithium
2	921000200696		Charger48V150A(USA)	1		Lithium
2	921000200697		Charger48V200A(USA)	1		Lithium
2	921000200699		Charger48V35A(USA)	1		Lithium
2	921000200702		Charger48V200A(USA480V)	1		Lithium
2	921000200712		Charger48V150A(AUS)	1		Lithium
2	921000200713		Charger48V200A(AUS)	1		Lithium
2	921000200721		Charger48V200A(EU)	1		Lithium
2	921000200771		Charger48V150A(AUS)	1		Lithium
2	921000200773		Charger48V150A(AUS)	1		Lithium
2	921000200719		Charger48V150A(EU)	1		Lithium
2	921000200772		Charger48V150A(USA)	1		Lithium
2	921000200774		Charger48V150A(USA)	1		Lithium
2	921000200720		Charger48V200A(USA)	1		Lithium
2	921000200775		Charger48V200A(Aisa-ENG)	1		Lithium
2	921000200702		Charger48V200A(USA)	1		Lithium
2	921000200776		Charger48V200A(AUS)	1		Lithium
2	921000200777		Charger48V200A(USA)	1		Lithium
2	921000200778		Charger48V200A(USA)	1		Lithium

1= Supply as package. 2= Supply with constraints. 3= Phasing-out supply. 4= Supply as assembly. 5= Check other tables.

Chapter 7：Special Parts

01 Battery Holder (213146012501)

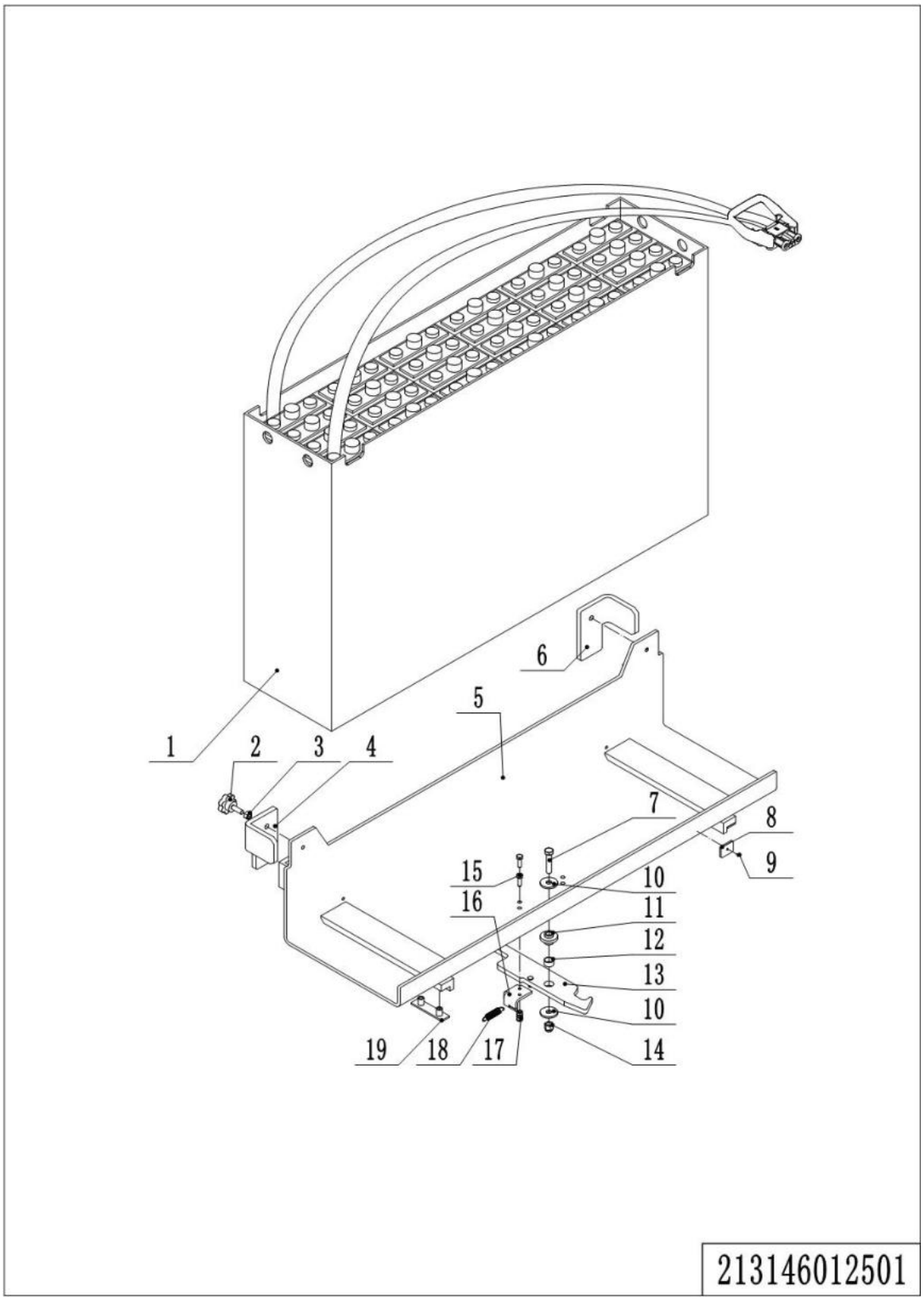

1= Supply as package. 2= Supply with constraints. 3= Phasing-out supply. 4= Supply as assembly. 5= Check other tables.

01 Battery Holder (213146012501)

No.	Item Code	Mark	Item Description	Qty.	Substitute	Note
1	213137010000		Battery48V560Ah(welded)	1		
1	213137010001		Battery48V560Ah	1		
1	213137040000		Battery48V560Ah	1		
1	213137010003		Battery48V560Ah	1		
1	920600100121		Li Battery48V400Ah	1		
1	920600100156		Li Battery48V300Ah	1		
1	920600100282		Li Battery48V300Ah	1		
1	920600100283		Li Battery48V300Ah	1		
1	920600100284		Li Battery48V400Ah	1		
1	920600100285		Li Battery48V400Ah	1		
1	920600100292		Li Battery48V400Ah	1		
1	920600100293		Li Battery48V400Ah	1		
1	920600100480		Battery48V560Ah	1		
1	920600100561		Battery48V560Ah	1		
1	920600100544		Battery48V560Ah	1		
1	920600100481		Battery48V700Ah	1		
1	920600100562		Battery48V700Ah	1		
1	920600100561		Battery48V560Ah	1		
1	920600100555		Battery48V560Ah	1		
2	911000300002		Handle	2		
3	910300100007		Nut	2		
4	213012520303		Stop Block	1		
5	213112510000		Battery Rack	1		
6	213012520304		Stop Block	1		
7	910100300055		Bolt	1		
8	255021020068		cushion rubber	2		
9	910200400014		Bolt	2		
10	213012520009		Washer	2		
11	213012520008		Bracket	1		
12	940500100012		Bushing	1		

1= Supply as package. 2= Supply with constraints. 3= Phasing-out supply. 4= Supply as assembly. 5= Check other tables.

01 Battery Holder (213146012501) Continuation

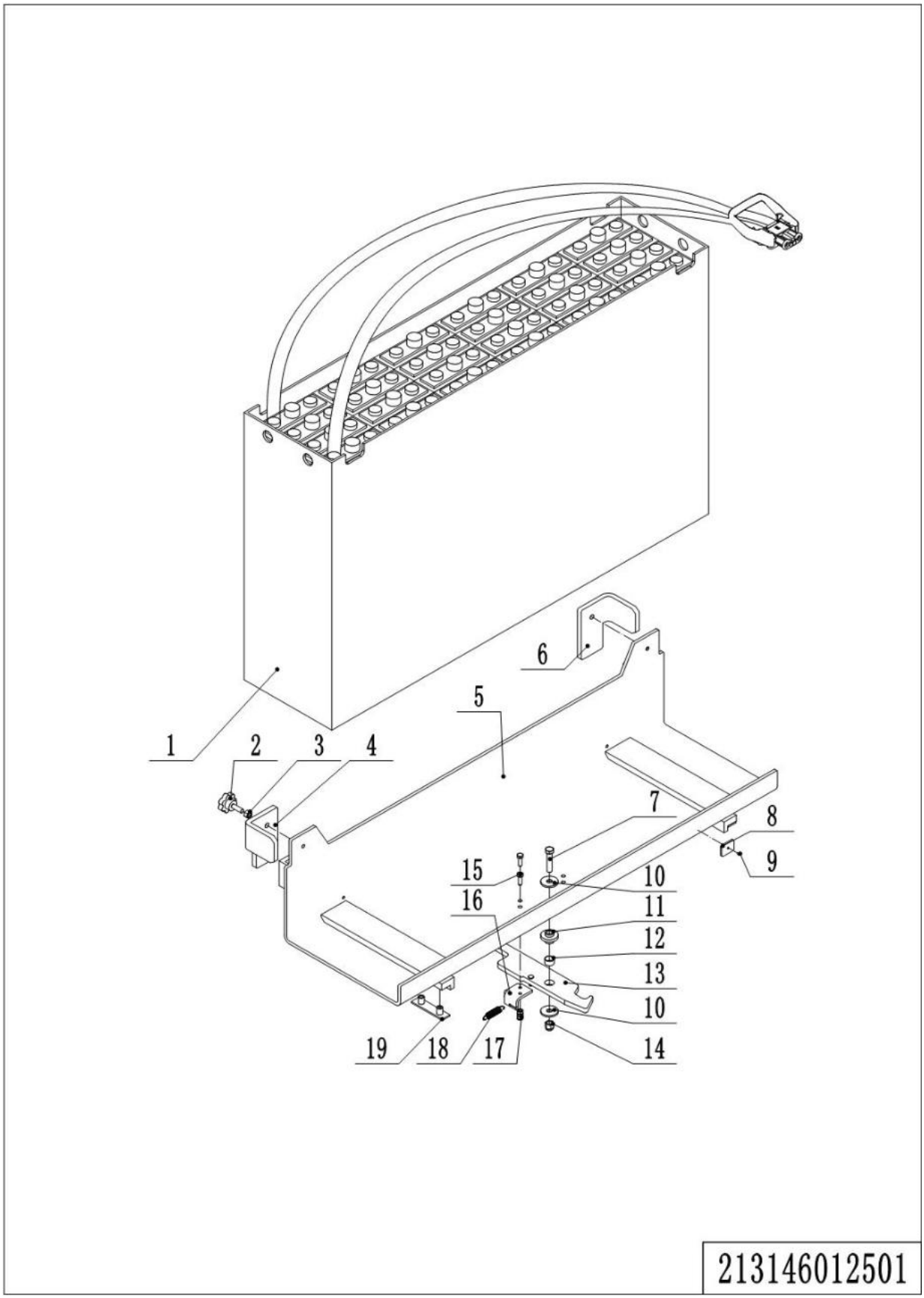

1= Supply as package. 2= Supply with constraints. 3= Phasing-out supply. 4= Supply as assembly. 5= Check other tables.

01 Battery Holder (213146012501) Continuation

No.	Item Code	Mark	Item Description	Qty.	Substitute	Note
13	213112510011		Pothook	1		
14	910300500006		Nut	1		
15	910100300023		Bolt	2		
16	213012520005		Plate	1		
17	910300500004		Nut	2		
18	213012520006		Spring	1		
19	255044020131		Subplate	4		

02 Monitor (213346036001)

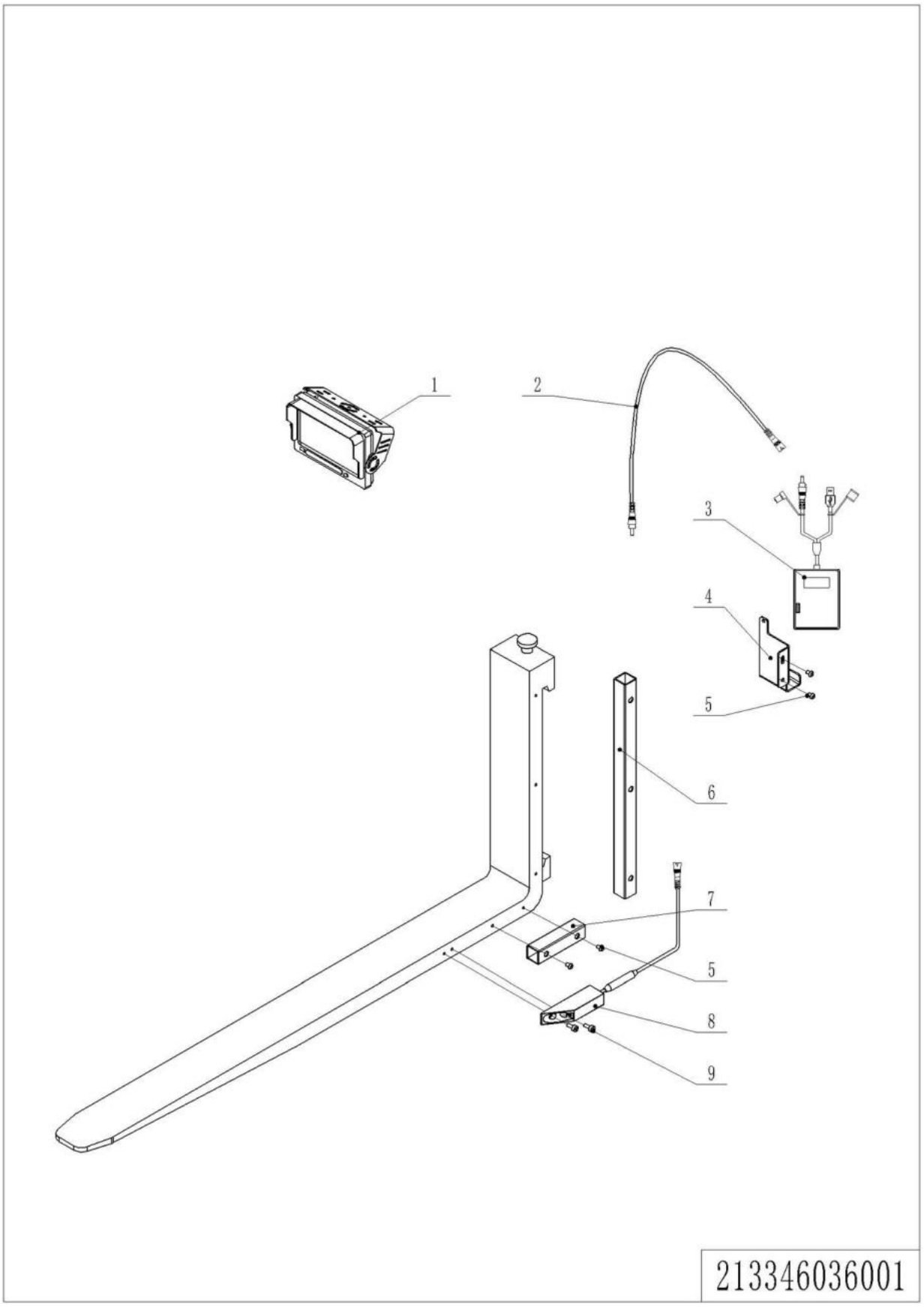

1= Supply as package. 2= Supply with constraints. 3= Phasing-out supply. 4= Supply as assembly. 5= Check other tables.

02 Monitor (213346036001)

No.	Item Code	Mark	Item Description	Qty.	Substitute	Note
1	921100100058		Display	1		
2	921500100110		Wire	1		
3	920600100384		Li Battery3.7V30000mAh	1		
4	212136020010		Mounting Bracket	1		
5	910200300017	1	Screw	7		
6	212136020002		Conduit	1		
7	212136020001		Conduit	1		
8	921100100059		Camera	1		
9	910200200033	1	Screw	2		

1= Supply as package. 2= Supply with constraints. 3= Phasing-out supply. 4= Supply as assembly. 5= Check other tables.

03 Monitor(Wired power) (213346036002)

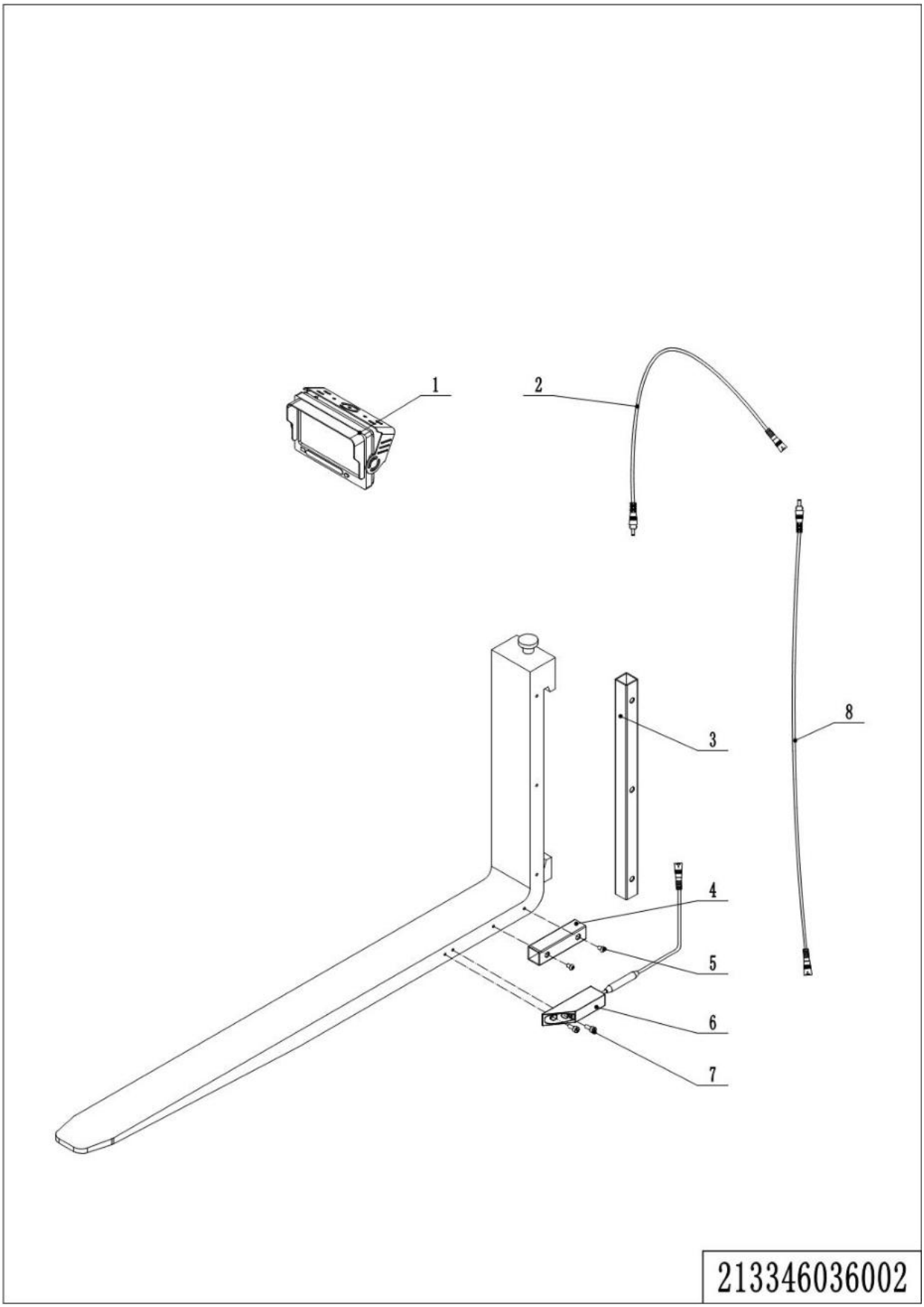

1= Supply as package. 2= Supply with constraints. 3= Phasing-out supply. 4= Supply as assembly. 5= Check other tables.

03 Monitor(Wired power) (213346036002)

No.	Item Code	Mark	Item Description	Qty.	Substitute	Note
1	921100100058		Display	1		
2	921500100110		Wire	1		
3	212136020002		Conduit	1		
4	212136020001		Conduit	1		
5	910200300017		Screw	7		
6	921100100059		Camera	1		
7	910200200033		Screw	2		
8	/		Wire	1		

1= Supply as package. 2= Supply with constraints. 3= Phasing-out supply. 4= Supply as assembly. 5= Check other tables.

04Height Preselection System (212146066501)

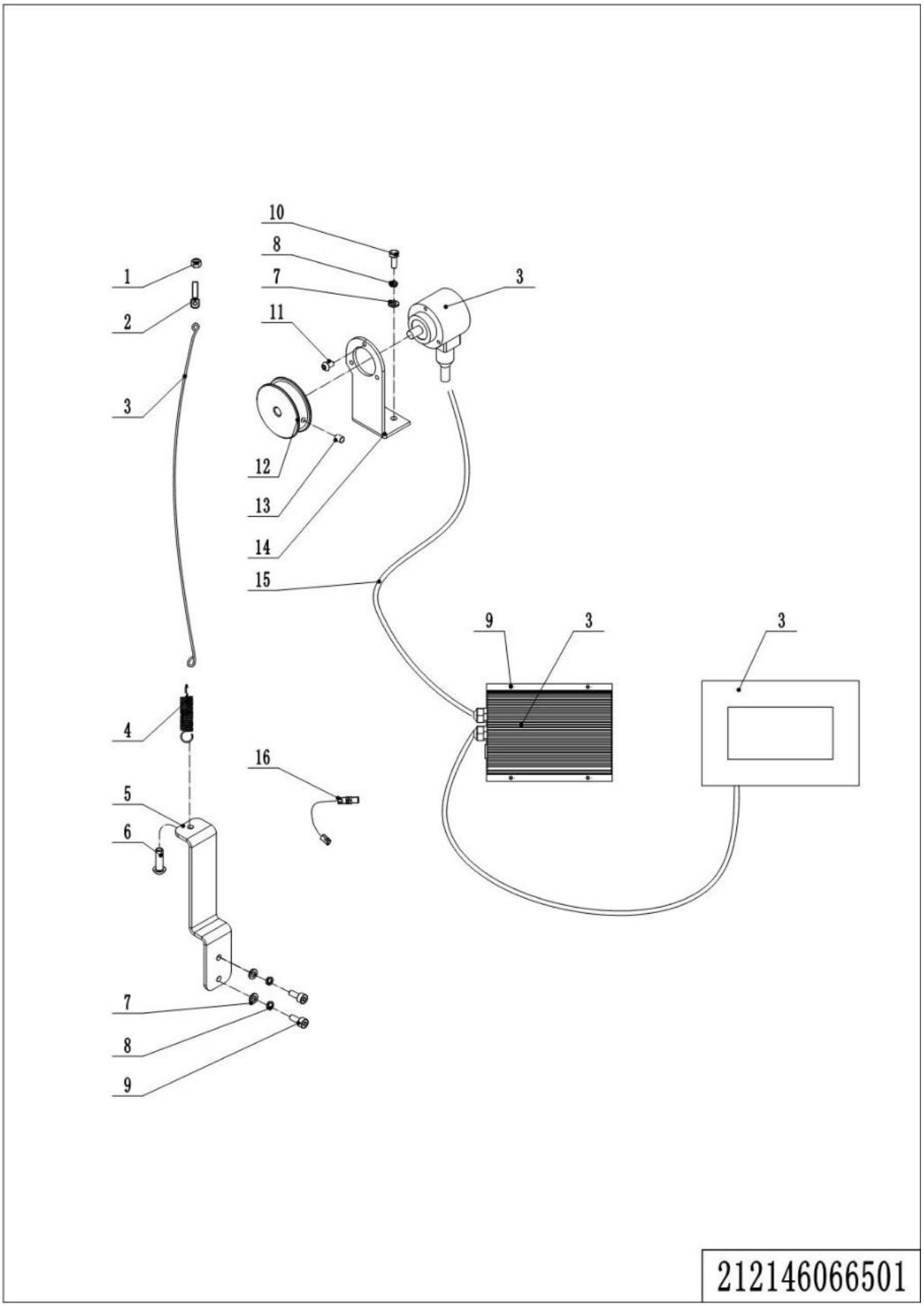

1= Supply as package. 2= Supply with constraints. 3= Phasing-out supply. 4= Supply as assembly. 5= Check other tables.

04Height Preselection System(212146066501)

No.	Item Code	Mark	Item Description	Qty.	Substitute	Note
1	910300100005	1	Nut	1		
2	212166520001		Screw	1		
3	922200100021		Height Preselection System	1		
4	213012520006		Spring	1		
5	212166520004		Fixing Plate	1		
6	941100800001		Pin	1		
7	910400100005	1	Flat Washer	10		
8	910400500005	1	Spring Washer	10		
9	910200200033	1	Screw	6		
10	910100300009	1	Bolt	4		
11	910200500022	1	Screw	3		
12	212166520002		Pulley	1		
13	910201000005	1	Screw	1		
14	212166520003		Mounting Plate	1		
15	213133010002		Wire Harness	1		4500
15	213133010003		Wire Harness	1		5000
15	213133010004		Wire Harness	1		5500
15	213133010005		Wire Harness	1		6000
15	213133010006		Wire Harness	1		6500
15	213133010007		Wire Harness	1		7000
15	213133010008		Wire Harness	1		7500
15	213133010009		Wire Harness	1		8000
15	213133010010		Wire Harness	1		8500
15	213133010011		Wire Harness	1		9000
15	213133010012		Wire Harness	1		9500
16	212133510008		Proximity Switch	1		

1= Supply as package. 2= Supply with constraints. 3= Phasing-out supply. 4= Supply as assembly. 5= Check other tables.

Chapter 8：Others

01Control Panel (212146010001)

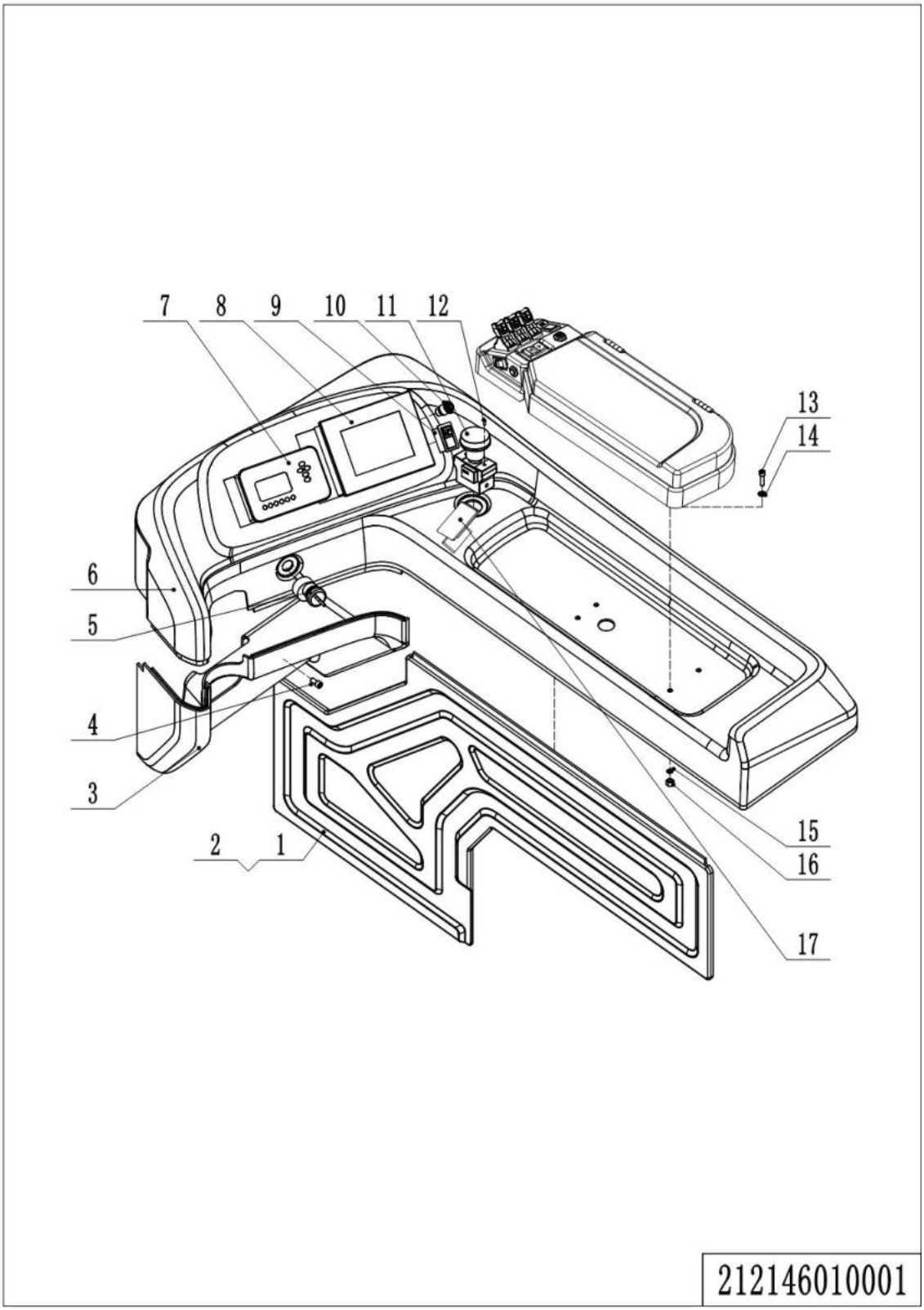

1= Supply as package. 2= Supply with constraints. 3= Phasing-out supply. 4= Supply as assembly. 5= Check other tables.

01Control Panel(212146010001)

No.	Item Code	Mark	Item Description	Qty.	Substitute	Note
1	212110020025		Side Plate	1		
2	910200500052	1	Screw	10		
3	212110020001		Close Plate	1		
4	910200300017	1	Screw	1		
5	920200200002		Key Switch	1		
6	212110020026		Protective Cover	1		
6	212110020026		Protective Cover	1		
6	212110020030		Protective Cover	1		Height Preselection
7	921100100011		Display	1		1232SE
7	921100100063		Display	1		F4A
8	/	5	/	1		
9	920200800009		Rocker Switch	1		
10	212133510012		Button	1		
11	920200100005		Emergency Button	1		
12	910200300013	1	Screw	2		
13	910200200036	1	Screw	4		
14	910400100005	1	Flat Washer	4		
15	910400500005	1	Spring Washer	4		
16	910300100005	1	Nut	4		
17			Password lock	1		

1= Supply as package. 2= Supply with constraints. 3= Phasing-out supply. 4= Supply as assembly. 5= Check other tables.

02Integrated Control Console(212146010002)

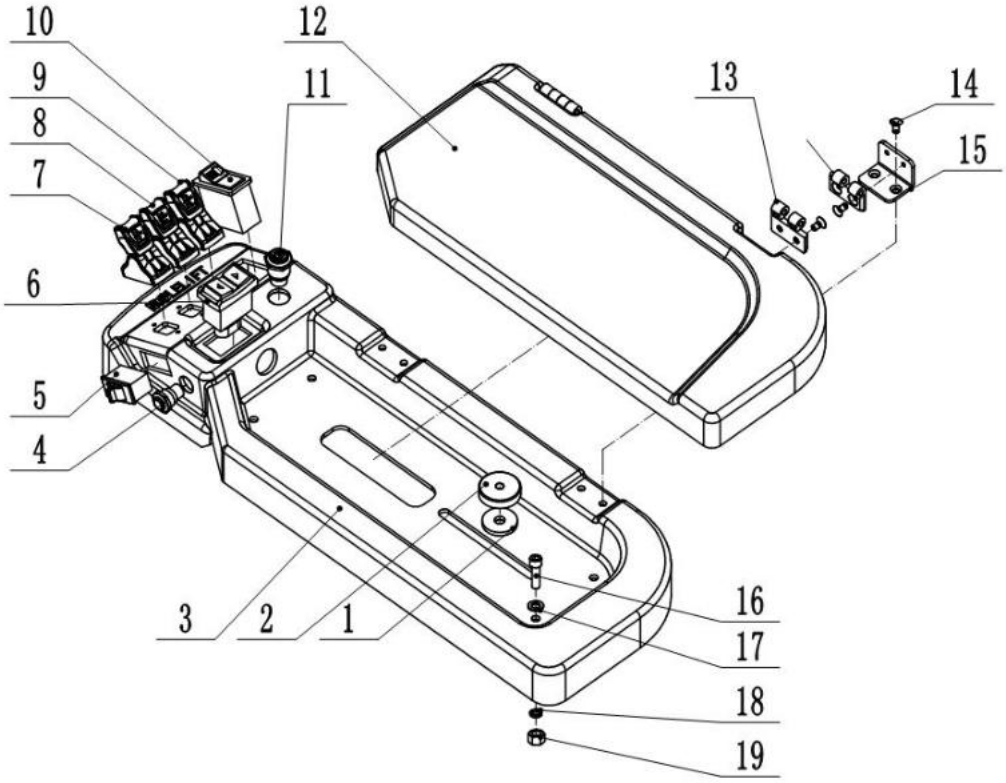

212146010002

1= Supply as package. 2= Supply with constraints. 3= Phasing-out supply. 4= Supply as assembly. 5= Check other tables.

02Integrated Control Console(212146010002)

No.	Item Code	Mark	Item Description	Qty.	Substitute	Note
1	212110020010		Washer	1		
2	212110020028		Handle	1		
3	212110020003		Protective Cover	1		
4	920200700003		Switch	1		
5	212133510017		Switch	1		Shift FW./ BW.
5	213133510005		Switch	1		Shift FW./ BW. (two-way)
6	920200800040		Rocker Switch	1		
7	212133510014		Switch	1		Lift/ Lower（100mm）
7	212133510020		Switch	1		Lift/ Lower（160mm）
7	213133510002		Switch	1		Lift/ Lower(two-way)
8	212133510015		Switch	1		Move FW./ BW. （100mm）
8	212133510021		Switch	1		Move FW./ BW. （160mm）
8	213133510003		Switch	1		Move FW./ BW. (two-way)
9	212133510016		Switch	1		Tilt Up/ Down（100mm）
9	212133510022		Switch	1		Tilt Up/ Down（160mm）
9	213133510004		Switch	1		Tilt Up/ Down(two-way)
10	920200800008		Rocker Switch	1		
11	212133510013		Button	1		
12	212110010000		Cover	1		
13	940801300003		Hinge	2		
14	910200600016	1	Screw	12		
15	212110020004		Fixing Plate	2		
16	910200200036	1	Screw	4		
17	910400100005	1	Flat Washer	4		
18	910400500005	1	Spring Washer	4		
19	910300100005	1	Nut	4		

1= Supply as package. 2= Supply with constraints. 3= Phasing-out supply. 4= Supply as assembly. 5= Check other tables.

03Adjustable Console Support(212146010003)

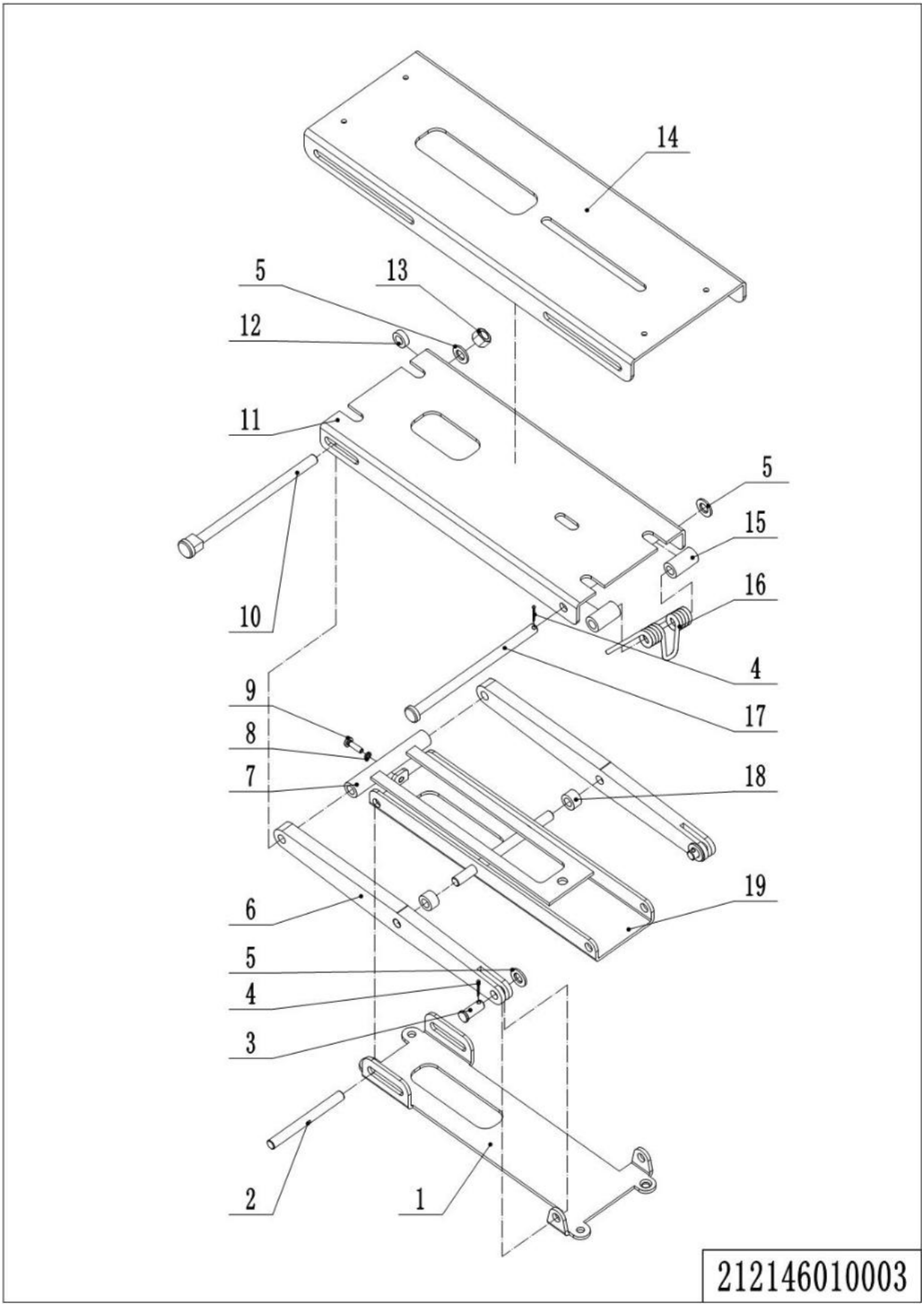

1= Supply as package. 2= Supply with constraints. 3= Phasing-out supply. 4= Supply as assembly. 5= Check other tables.

03Adjustable Console Support(212146010003)

No.	Item Code	Mark	Item Description	Qty.	Substitute	Note
1	212110020012		Baseboard	1		
2	212110020008		Axle	1		
3	212110020016		Pin	2		
4	910600600026		Cotter Pin	3		
5	910400100006	1	Flat Washer	4		
6	212110020011		Fork Plate(outer)	2		
7	212110010001		Bracket	1		
8	910400500003		Spring Washer	1		
9	910200500022	1	Screw	1		
10	212110020007		Axle	1		
11	212110020006		Sliding Plate	1		
12	212110020009		Spacer Bush	1		
13	910300500004	1	Nut	1		
14	212110020005		Bracket	1		
15	212110020013		Spacer Bush	2		
16	212110020027		Torsional Spring	1		
17	212110020014		Pin	1		
18	212110020015		Spacer Bush	2		
19	212110010002		Fork Plate(inner)	1		

1= Supply as package. 2= Supply with constraints. 3= Phasing-out supply. 4= Supply as assembly. 5= Check other tables.

04Labels and Decals(213146047001)

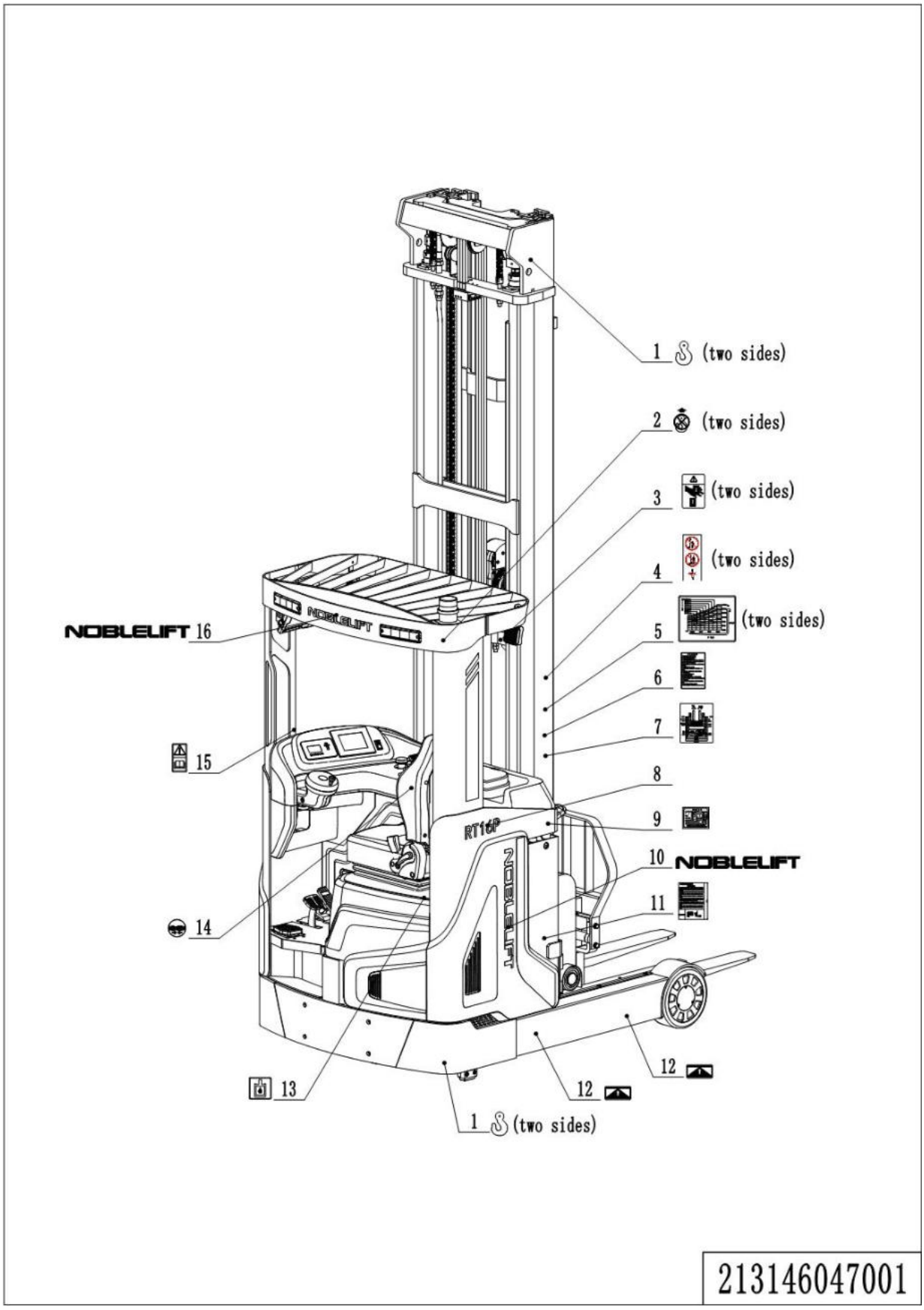

1= Supply as package. 2= Supply with constraints. 3= Phasing-out supply. 4= Supply as assembly. 5= Check other tables.

04Labels and Decals(213146047001)

No.	Item Code	Mark	Item Description	Qty.	Substitute	Note
1	941200300001		Label	4		
2	941200100025		Label	2		
3	941200100027		Label	2		
4	941200100004		Label	2		
5	213147020001		Load Capacity Diagram	2		
6	212147020012		Label	1		
7	212147020010		Label,Lubrication	1		
8	213147020002		Label	1		
9	941200600003		Identification Plate	1		
10	212147020006		Label	1		
11	212147020011		Label	1		
12	255047020023		Label	2		
13	255047020004		Label	1		
14	255047020012		Label	1		
15	941200300011		Label	1		
16	212147020007		Label	1		

1= Supply as package. 2= Supply with constraints. 3= Phasing-out supply. 4= Supply as assembly. 5= Check other tables.

Appendix

01Electrical Circuit Diagram(1232SE)

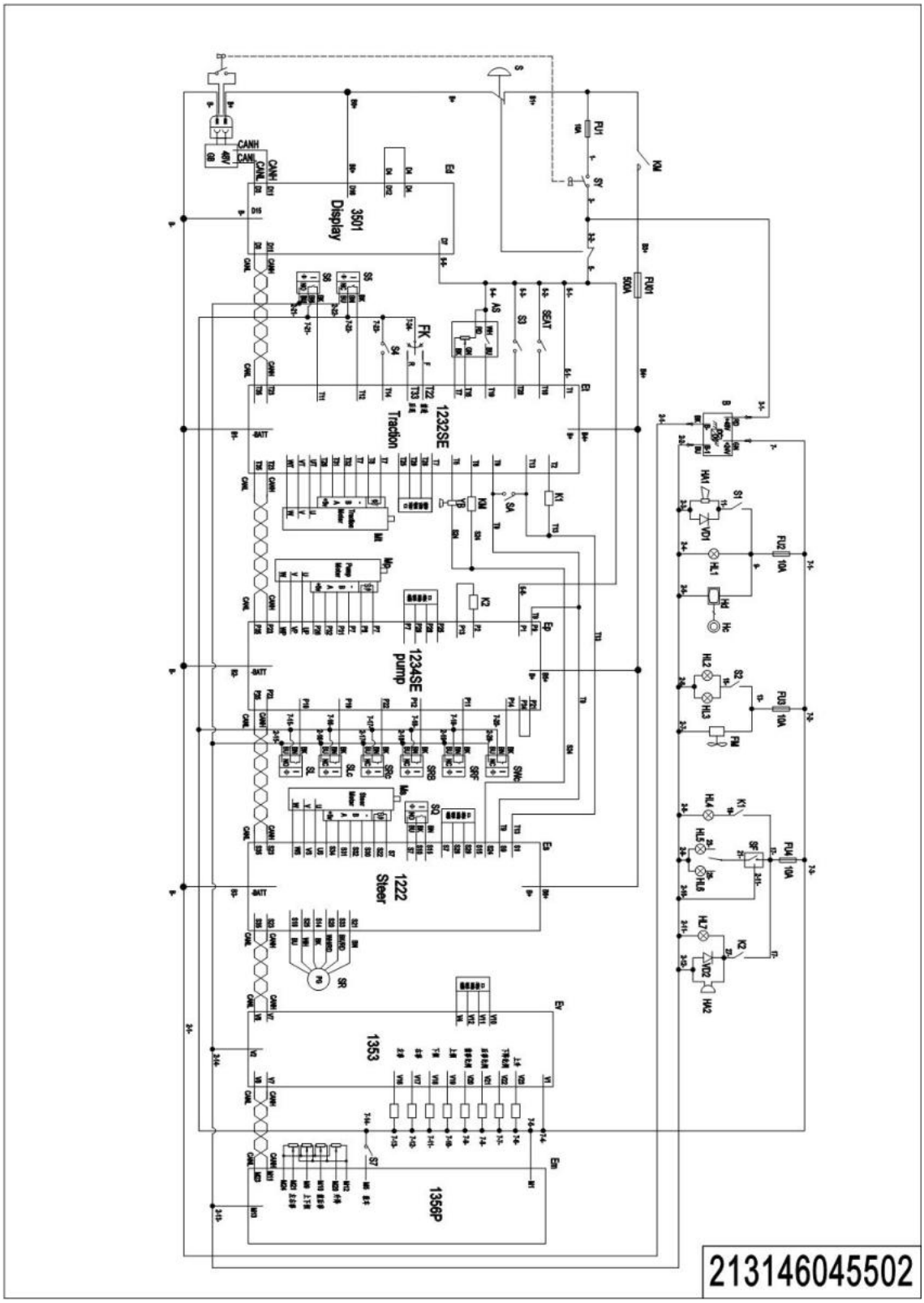

1= Supply as package. 2= Supply with constraints. 3= Phasing-out supply. 4= Supply as assembly. 5= Check other tables.

02Electrical Circuit Diagram(F4A)

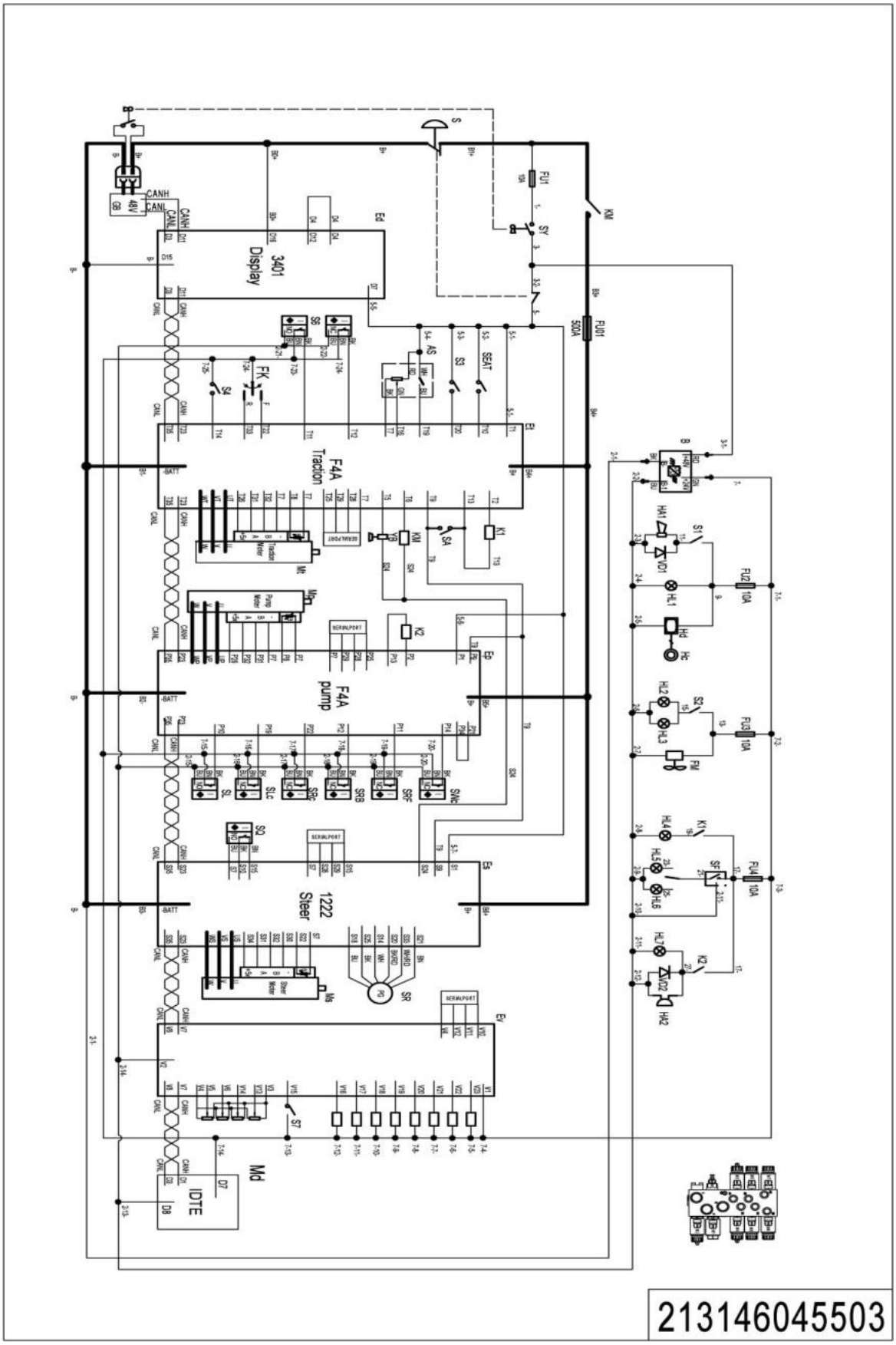

1= Supply as package. 2= Supply with constraints. 3= Phasing-out supply. 4= Supply as assembly. 5= Check other tables.

03Electrical Circuit Diagram(F4A,EN1175-2020)

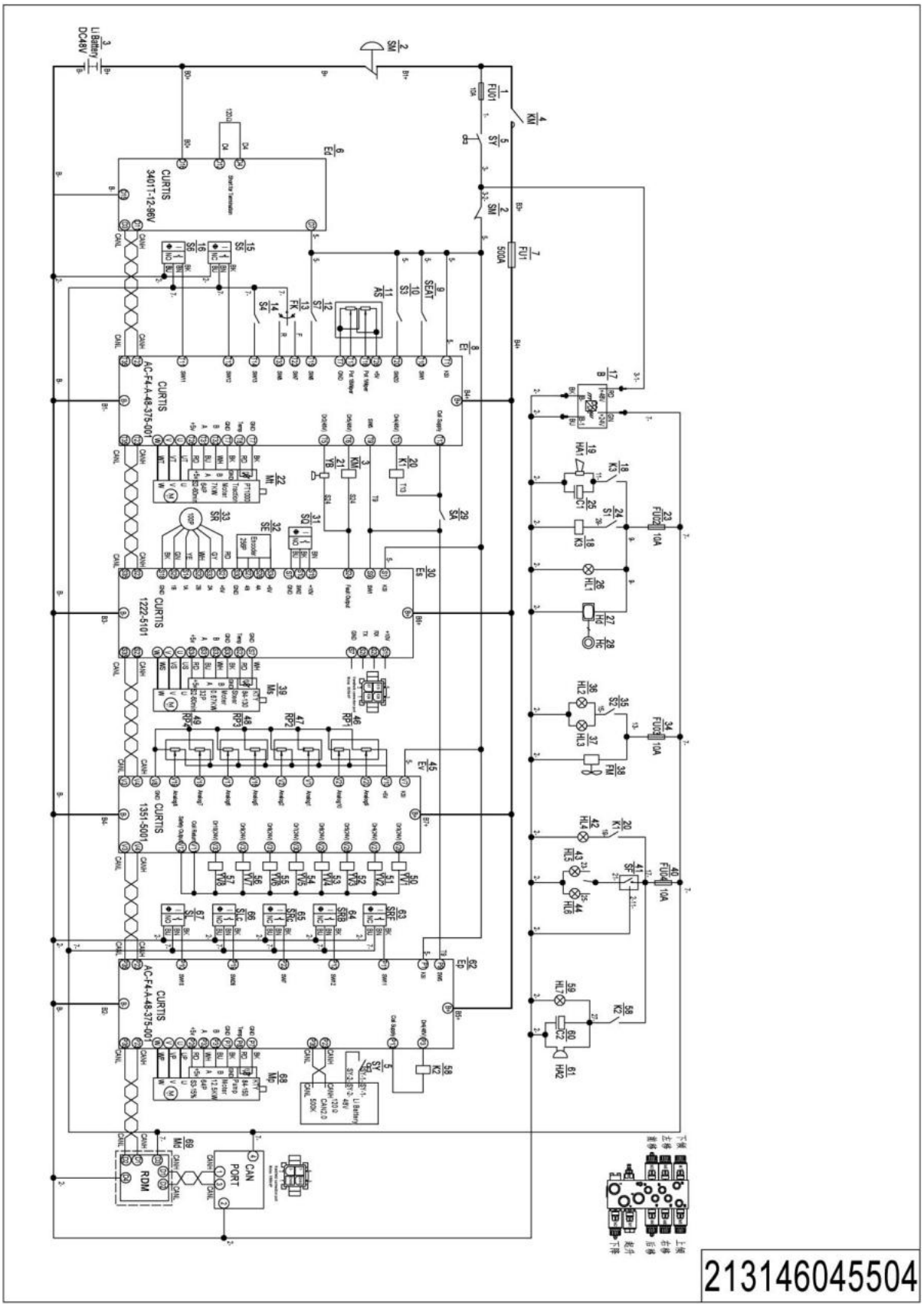

04Hydraulic Circuit Diagram

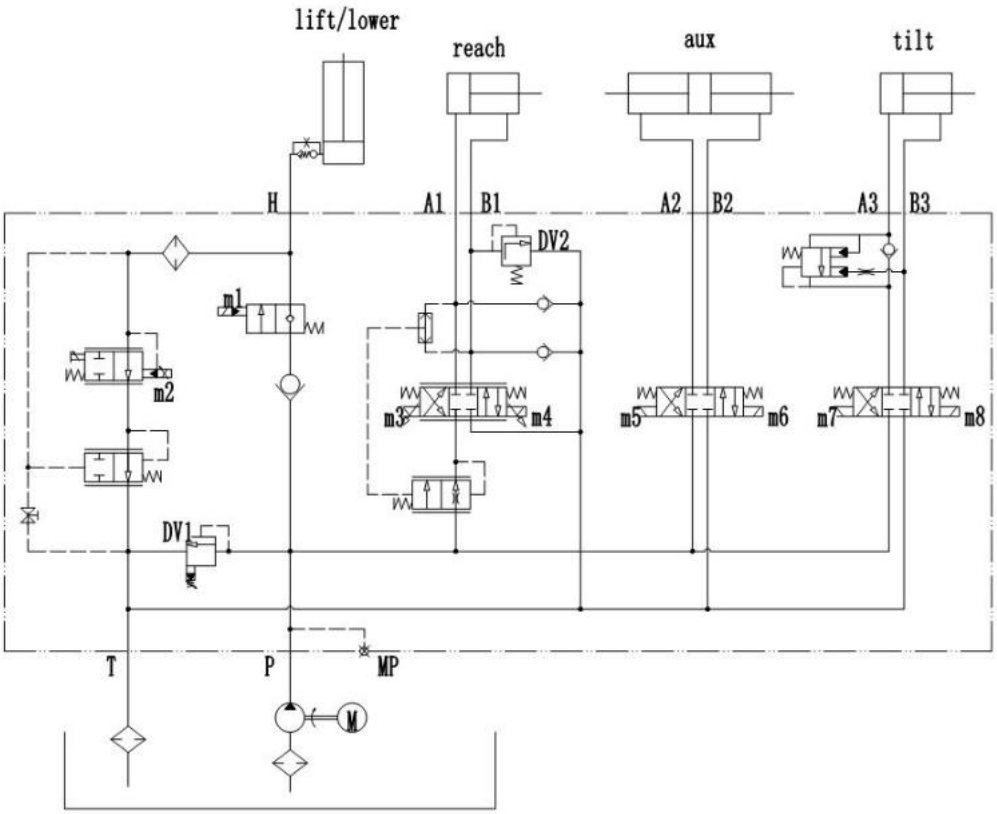

212146045502

1= Supply as package. 2= Supply with constraints. 3= Phasing-out supply. 4= Supply as assembly. 5= Check other tables.

05Consumable Parts List

No.	Item Code	Item Description	Qty.	Chapter/ Section/ Number
1	940300400041	WheelΦ343x140	1	Chapter 1/01/20
2	212198510004	Seal Kit	1	Chapter 2/02/6.01
3	212198510000	Seal Kit	2	Chapter 2/04/2.01
4	212121520048	Gas Spring	1	Chapter 3/01/31
5	212198510002	Seal Kit	1	Chapter 4/01/17.01
6	940200300052	Compound Roller	4	Chapter 4/01/20 Chapter 4/02/18
7	940200300046	Compound Roller	4	Chapter 4/02/3 Chapter 4/03/16
8	212198510003	Seal Kit	1	Chapter 4/03/15.01
9	940200100042	Main Roller	2	Chapter 4/04/12
10	940200300042	Compound Roller	4	Chapter 4/04/14
11	940200100008	Main Roller	4	Chapter 4/04/21
12	940200300040	Compound Roller	6	Chapter 4/05/9
13	910700200019	Bearing	4	Chapter 4/06/3
14	940500100016	Bushing	1	Chapter 4/06/17
15	910800100124	O-Ring	26	Chapter 4/06/19
16	940500100079	Bushing	20	Chapter 4/06/32
17	910800100125	O-Ring	4	Chapter 4/06/46
18	910800100061	O-Ring	4	Chapter 4/06/63
19	910700200004	Bearing	1	Chapter 5/01/12
20	940500200016	Bushing	2	Chapter 5/03/3
21	941101000005	Bearing	1	Chapter 5/04/7
22	940300300035	WheelΦ330x110	2	Chapter 5/04/8
23	920100200002	Fuse	4	Chapter 6/02/6
24	940500100012	Bushing	1	Chapter 7/01/12

1= Supply as package. 2= Supply with constraints. 3= Phasing-out supply. 4= Supply as assembly. 5= Check other tables.