Print Number: Print Date:

NOBLELIFT

Scan QR Code for More

Reach Truck RT16B

PARTS MANUAL

212346020101

Version: V02

Truck Identification Number From:

Parts Manual RT16B-PM02EN

Please order spare parts from authorized dealers of Noblelift Intelligent Equipment Co., LTD.

In order to avoid wrong delivery, all the orders for spare parts should specify the following items:

- Truck model, identification number and manufacture year.
- Orders for spare parts of mast, hydraulic transmission unit, steering axle, motor, etc. shall indicate the manufacture number of these parts.
- Codes for Noblelift spare parts are shown in the table of parts manual. Please also pay attention to the description of supply status, order quantity, etc. (check the number listed in "Mark" column of the parts manual).

"Mark" Column:

The unmarked indicates the parts are in short supply cycle.

Number 1: supply as package. Indicating these that parts are small parts and seal parts, which are supplied in package unit and in short supply cycle.

Number 2: supply with constraints. Indicating that these spare parts are not in stock and will be prepared for production after receiving the order from customers, which are in long supply cycle.

Number 3: phasing-out supply. Indicating that these parts will be replaced by new parts due to technical improvements and the current stock will not be available when these parts run out. Please check the description of technical improvements notice.

Number 4: supply as assembly. Indicating that these parts are assembly parts defined by manufacture process, which cannot be supplied as a single part.

Number 5: check other tables.

This parts manual is the property of Noblelift and can be shared under the confidential agreement only, Noblelift has the right to claim for compensation of any unauthorized use. Copy without permission is not allowed. Figures in the manual are not limited by the original design. Noblelift Intelligent Equipment Co., LTD reserves the right to improve the products for continuous technology progress.

Table of Contents

Chapter 1: Drive System 5
01 Drive Unit (212146013501) 5
02 Lift Unit (212146032501) 7
Chapter 2: Hydraulic System 9
01 Hydraulic Circuit 3 (212346025001) 9
01 Hydraulic Circuit 3 (212346025001) Continuation 11
02 Hydraulic Circuit 4 (212346025501) 13
02 Hydraulic Circuit 4 (212346025501) Continuation 15
03 Reach Cylinder (212346020001) 17
04 Oil Tank (212346019001) 19
05 Tilt Cylinder (212146020501) 21
Chapter 3: Truck Frame 23
01 Chassis (212346021501) 23
01 Chassis (212346021501) Continuation 25
02 Handle Assembly (212346021502) 27
03 Overhead Guard (213346022001) 29
04 Platform (212146018001) 31
05 Seat (213346037501) 33
Chapter 4: Mast 35
01 Outer Mast (212346044501) 35
01 Outer Mast (212346044501) Continuation1 37
01 Outer Mast (212346044501) Continuation 2 39
02 Middle Mast (212146044502) 41
03 Inner Mast (212346044503) 43
03 Inner Mast (212346044503) Continuation 45
04 Reach Frame (212346044504) 47
04 Reach Frame (212346044504) Continuation 49
05 Fork Carriage (212346044505) 51
06 Mast Hydraulic Circuit 3 (212346044506) 53
06 Mast Hydraulic Circuit 3 (212346044506) Continuation1 55
06 Mast Hydraulic Circuit 3 (212346044506) Continuation 2 57
06 Mast Hydraulic Circuit 3 (212346044506) Continuation 3 59
07 Mast Hydraulic Circuit 4 (212346044507) 61
07 Mast Hydraulic Circuit 4 (212346044507) Continuation1 63
07 Mast Hydraulic Circuit 4 (212346044507) Continuation 2 65
07 Mast Hydraulic Circuit 4 (212346044507) Continuation 3 67
Chapter 5: Steering System, Braking System, Wheels 69
01 Steering Wheel (213346031501) 69
01 Steering Wheel (213346031501) Continuation 71
02 Brake Pedal (213346011501) 73
03 Brake Unit (212346011501) 75
04 Load Wheel (212146017001) 77

Chapter 6: Electrical Parts 79
01 Wire Harness (212346033001) 79
02 Controller 1232SE (211046033002) 81
03 Controller F4A(212346033010) 83
04 Controller INMOTION(212346033011) 85
05 Charger (212346036501) 87
Chapter 7: Special Parts 89
01 Battery Holder (212146012501) 89
01 Battery Holder (212146012501) Continuation 91
02 Monitor (213346036001) 93
03 Monitor(Wired power) (213346036002) 95
Chapter 8: Others 97
01 Control Panel (212346010001) 97
02 Labels and Decals (212346047001) 99
Appendix 101
01 Electrical Circuit Diagram 1232SE 101
02 Electrical Circuit Diagram F4A 102
03 Electrical Circuit Diagram INMOTION 103
04 Hydraulic Circuit Diagram 104
05 Consumable Parts List 105

Chapter 1: Drive System

01 Drive Unit (212146013501)

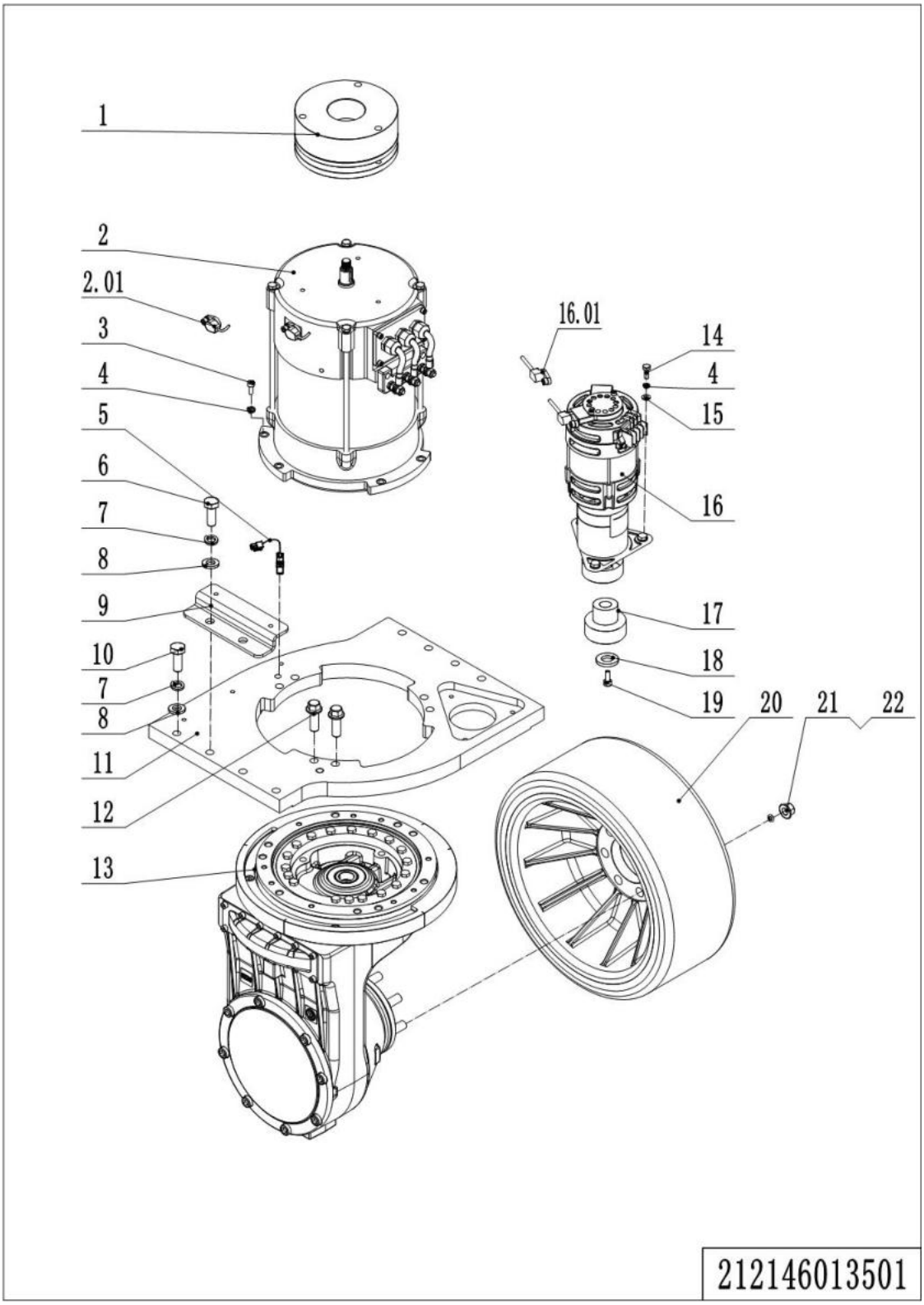

1= Supply as package. 2= Supply with constraints. 3= Phasing-out supply. 4= Supply as assembly. 5= Check other tables.

01 Drive Unit (212146013501)

No.	Item Code	Mark	Item Description	Qty.	Substitute	Note
1	940700100003		Brake	1		
2	920900100110		Motor	1		
2	920900100102		Motor	1		SCH
2.01	921800200011		Encoder	1		
2.01	921800200037		Encoder	1		SCH
3	910200200061		Screw	6		
4	910400500006		Spring Washer	10		
5	212133510010		Proximity Switch	1		
6	910100300096		Bolt	2		
7	910400500008		Spring Washer	8		
8	910400100008		Flat Washer	8		
9	212121520047		Fixing Plate	1		
10	910100300095		Bolt	7		
11	213021520224		Plate	1		
12	910100800003		Bolt	6		
13	941000100007		Gearbox	1		
14	910400100006		Flat Washer	3		
15	910100300023		Bolt	3		
16	940900800001		Steering Unit	1		
16.01	921800200012		Encoder	1		
17	940998520071		Gear	1		
18	213313520001		Washer	1		
19	910200200058		Screw	1		
20	940300400041		WheelΦ343x140	1		
21	940998520072		Nut	7		
22	940998520073		Spring Washer	7		

1= Supply as package. 2= Supply with constraints. 3= Phasing-out supply. 4= Supply as assembly. 5= Check other tables.

02 Lift Unit (212146032501)

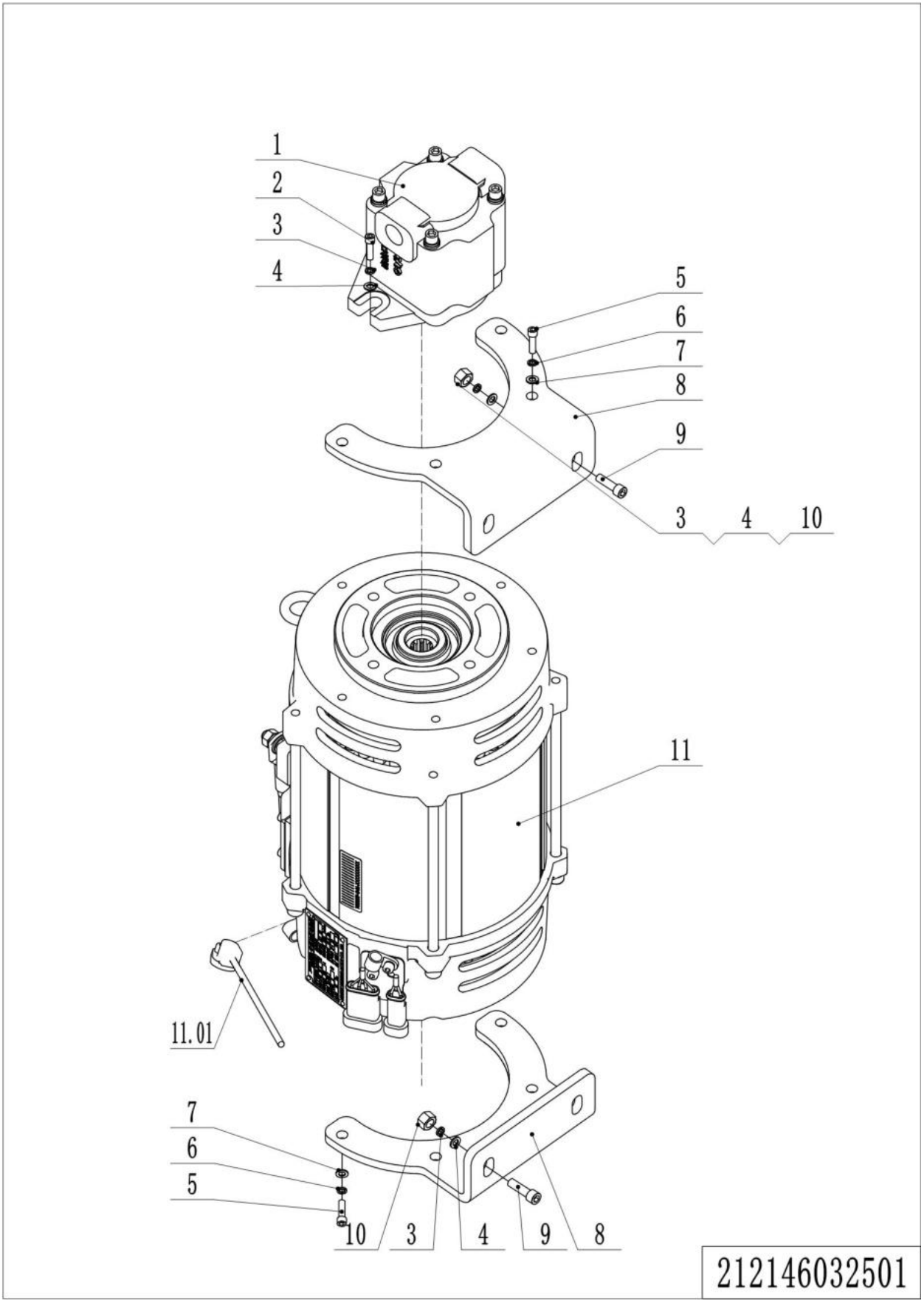

1= Supply as package. 2= Supply with constraints. 3= Phasing-out supply. 4= Supply as assembly. 5= Check other tables.

02 Lift Unit (212146032501)

No.	Item Code	Mark	Item Description	Qty.	Substitute	Note
1	950800200008		Gear Pump	1		
2	910200200077		Screw	2		
3	910400500007		Spring Washer	6		
4	910400100007		Flat Washer	6		
5	910200200057		Screw	8		
6	910400500006		Spring Washer	8		
7	910400100006		Flat Washer	8		
8	212132520000		Mounting Plate	2		
9	910200200079		Screw	4		
10	910300100007		Nut	4		
11	920900100027		Motor	1		KDS
11	920900100126		Motor	1		
11.01	921800200013		Encoder	1		KDS
11.01	921800200038		Encoder	1		

Chapter 2: Hydraulic System

01 Hydraulic Circuit 3 (212346025001)

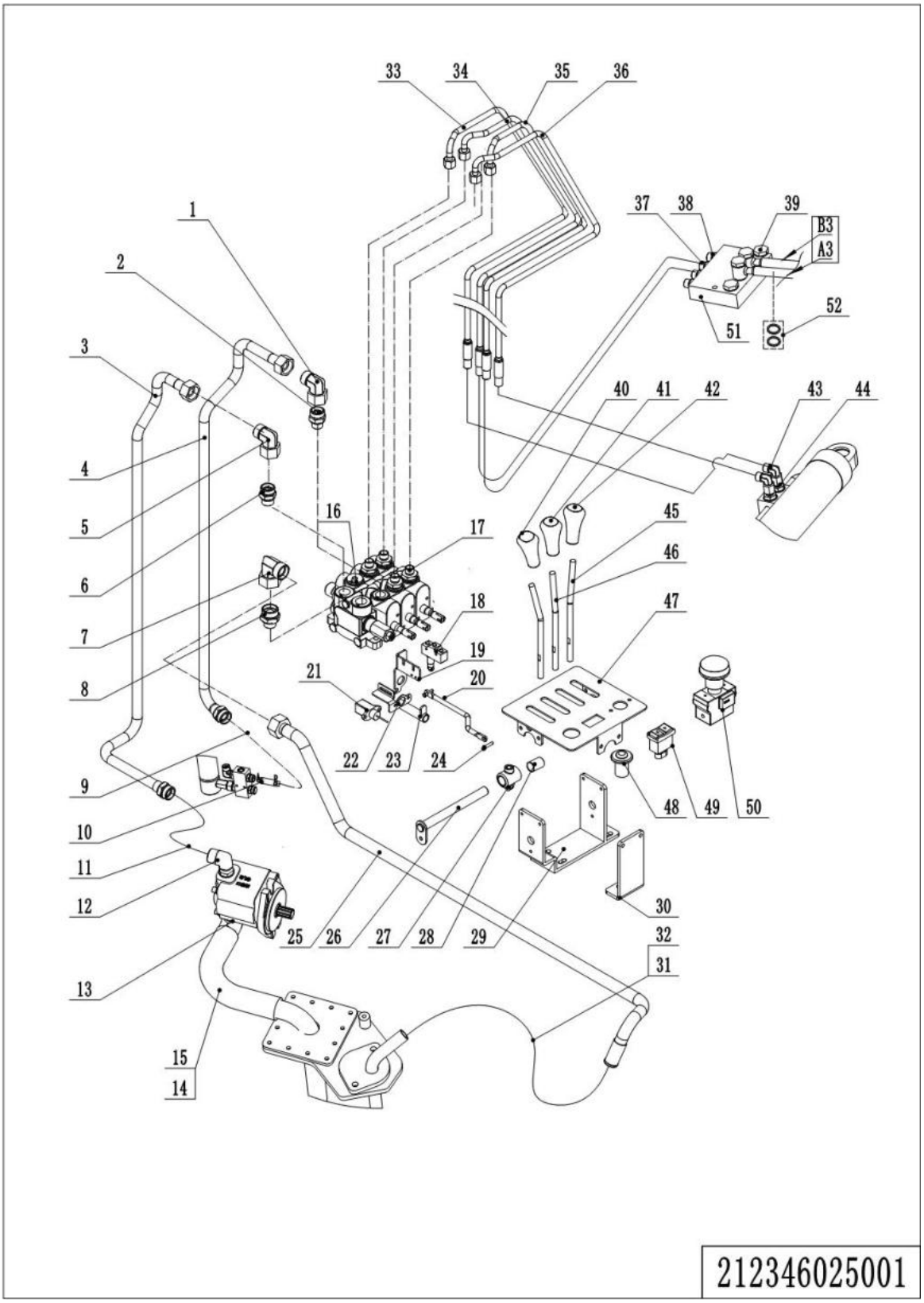

1= Supply as package. 2= Supply with constraints. 3= Phasing-out supply. 4= Supply as assembly. 5= Check other tables.

01 Hydraulic Circuit 3 (212346025001)

No.	Item Code	Mark	Item Description	Qty.	Substitute	Note
1	950400200006		Joint	1		
2	213025020007		Adapter	1		
3	212325520003		Steel Tube	1		
4	212325520004		Steel Tube	1		
5	950400200006		Joint	1		
6	950400400008		Joint	1		
7	950400200007		Joint	1		
8	213025020008		Adapter	1		
9	212225520001		Hose	1		
10	950700300005		Speed Limit Valve	1		
11	212325520002		Hose	1		
12	950401100005		Joint	1		
13	216525020008		Adapter	1		
14	212125020001		Oil Tube	1		
15	911000600006		Hose Clamp	2		
16	950700100006		Multi-way Valve	1		
17	950400400012		Joint	4		
18	920200300004		Microswitch	3		
19	212225520021		Fixing Plate	3		
20	212325520005		Connecting Rod	3		
21	921800100027		Sensor	1		
22	212225520022		Fixing Plate	1		
23	212225510001		Stop Plate	1		
24	941100800001		Pin	8		
25	212325520000		Steel Tube	1		
26	201025510001		Pin	1		
27	213025020020		Bracket	4		
28	940500100006		Bushing	6		
29	212325510000		Fixing Base	1		
30	212325520010		Fixing Plate	1		

1= Supply as package. 2= Supply with constraints. 3= Phasing-out supply. 4= Supply as assembly. 5= Check other tables.

01 Hydraulic Circuit 3 (212346025001) Continuation

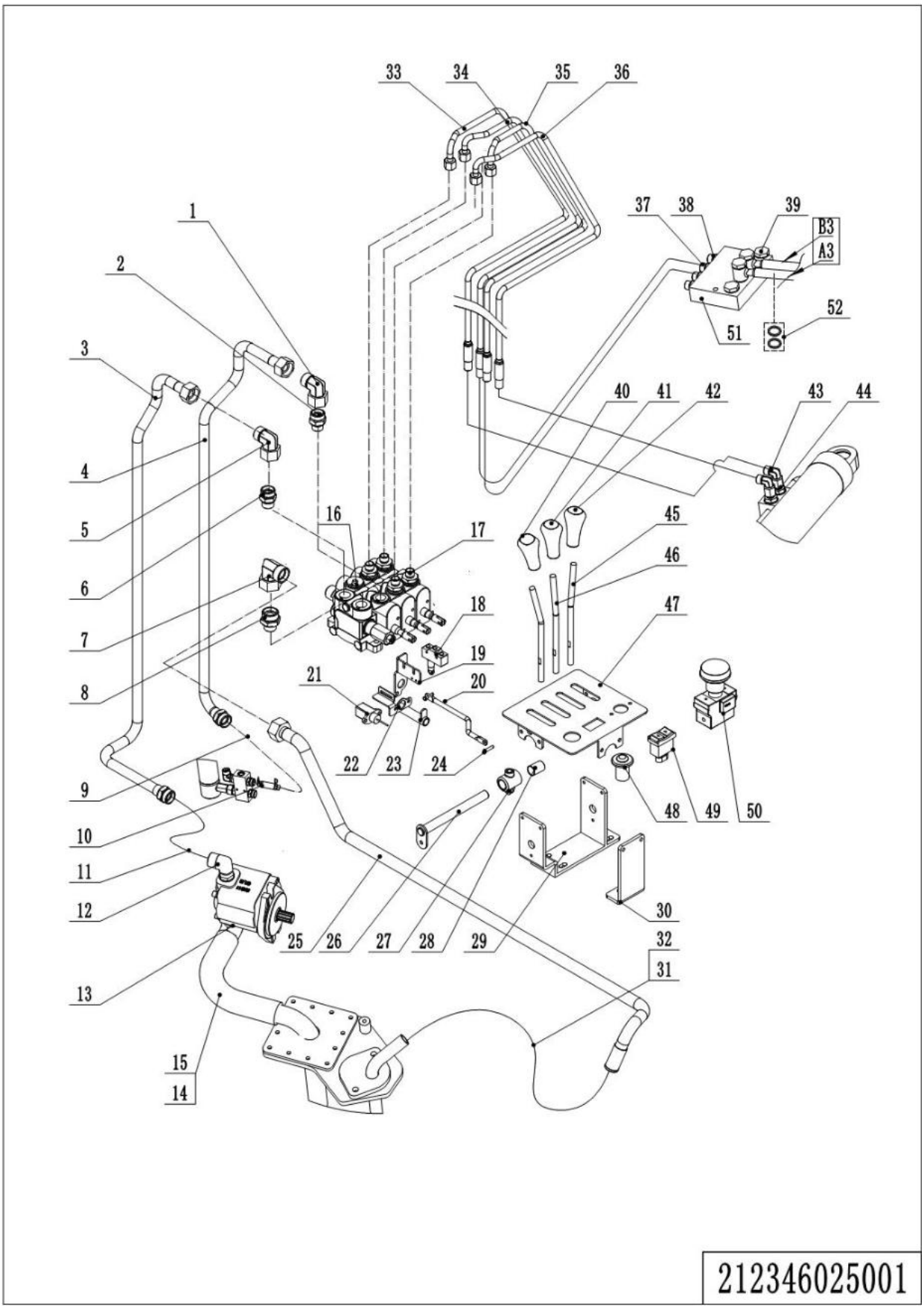

1= Supply as package. 2= Supply with constraints. 3= Phasing-out supply. 4= Supply as assembly. 5= Check other tables.

01 Hydraulic Circuit 3 (212346025001) Continuation

No.	Item Code	Mark	Item Description	Qty.	Substitute	Note
31	900200401003		Pipe	600		
32	911000600004		Hose Clamp	2		
33	212225520011		Hose	1		
34	212225520013		Hose	1		
35	212225520014		Hose	1		
36	212225520016		Hose	1		
37	950400400003		Joint	2		
38	951100300004		Plug	2		
39	951100300006		Plug	2		
40	253524520010		Knob	1		
41	216525020011		Knob	1		
42	253524520009		Knob	1		
43	950400200003		Joint	2		
44	950400400003		Joint	2		
45	212225520029		Joystick	2		
46	212225520028		Joystick	1		
47	212325020000		Close Plate	1		
48	920200700015		Switch	1		
49	920200800040		Switch	1		
50	920200100005		Emergency Button	1		
51	212225520002		Valve Block	1		
52	910800900005		Washer	4		

1= Supply as package. 2= Supply with constraints. 3= Phasing-out supply. 4= Supply as assembly. 5= Check other tables.

02 Hydraulic Circuit 4 (212346025501)

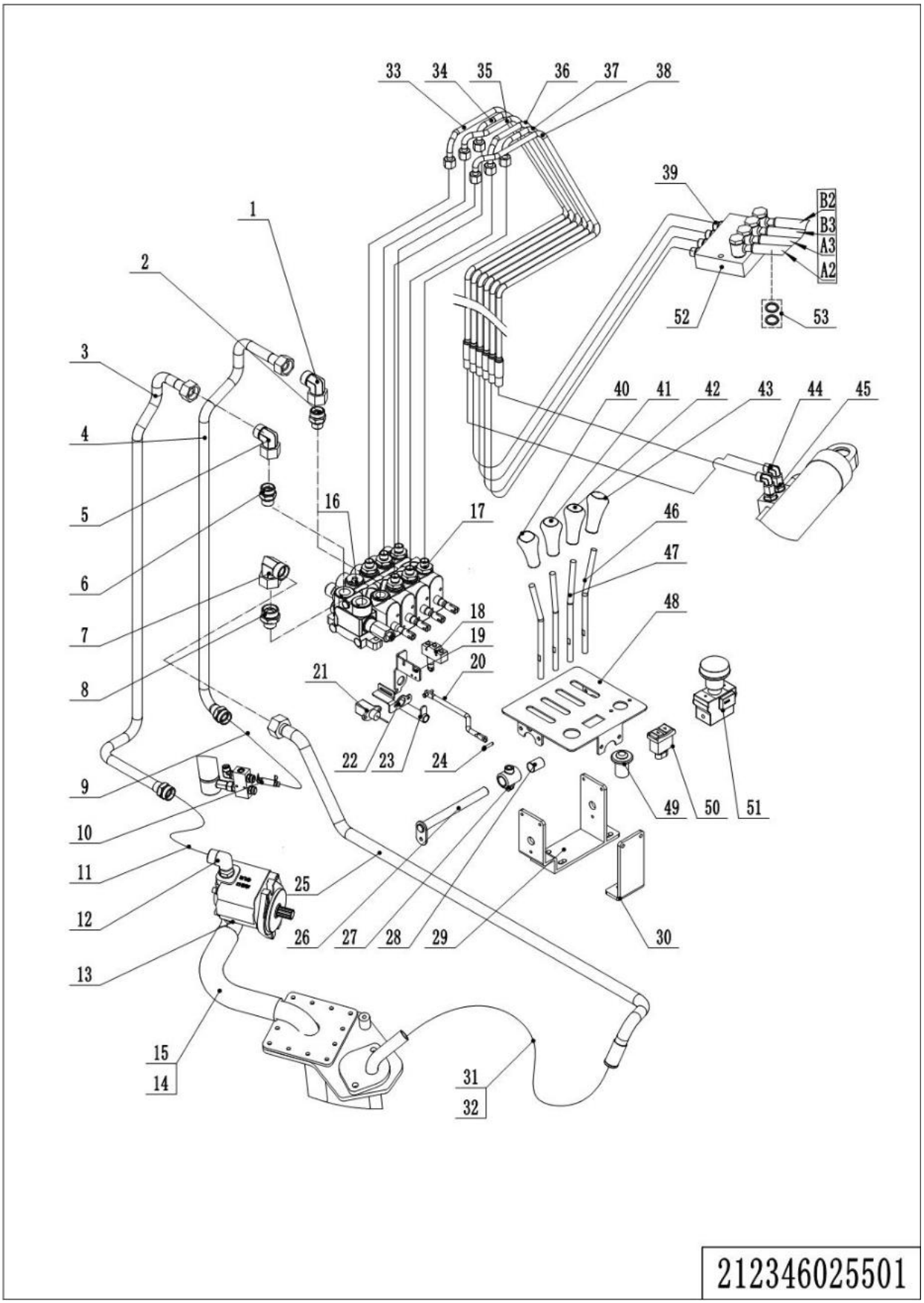

1= Supply as package. 2= Supply with constraints. 3= Phasing-out supply. 4= Supply as assembly. 5= Check other tables.

02 Hydraulic Circuit 4 (212346025501)

No.	Item Code	Mark	Item Description	Qty.	Substitute	Note
1	950400200006		Joint	1		
2	213025020007		Adapter	1		
3	212325520003		Steel Tube	1		
4	212325520004		Steel Tube	1		
5	950400200006		Joint	1		
6	950400400008		Joint	1		
7	950400200007		Joint	1		
8	213025020008		Adapter	1		
9	212225520001		Hose	1		
10	950700300005		Speed Limit Valve	1		
11	212325520002		Hose	1		
12	950401100005		Joint	1		
13	216525020008		Adapter	1		
14	212125020001		Oil Tube	1		
15	911000600006		Hose Clamp	2		
16	950700100006		Multi-way Valve	1		
17	950400400012		Joint	6		
18	920200300004		Microswitch	4		
19	212225520021		Fixing Plate	4		
20	212325520005		Connecting Rod	4		
21	921800100027		Sensor	1		
22	212225520022		Fixing Plate	1		
23	212225510001		Stop Plate	1		
24	941100800001		Pin	8		
25	212325520000		Steel Tube	1		
26	201025510001		Pin	1		
27	213025020020		Bracket	4		
28	940500100006		Bushing	8		
29	212325510000		Fixing Base	1		
30	212325520010		Fixing Plate	1		

1= Supply as package. 2= Supply with constraints. 3= Phasing-out supply. 4= Supply as assembly. 5= Check other tables.

02 Hydraulic Circuit 4 (212346025501) Continuation

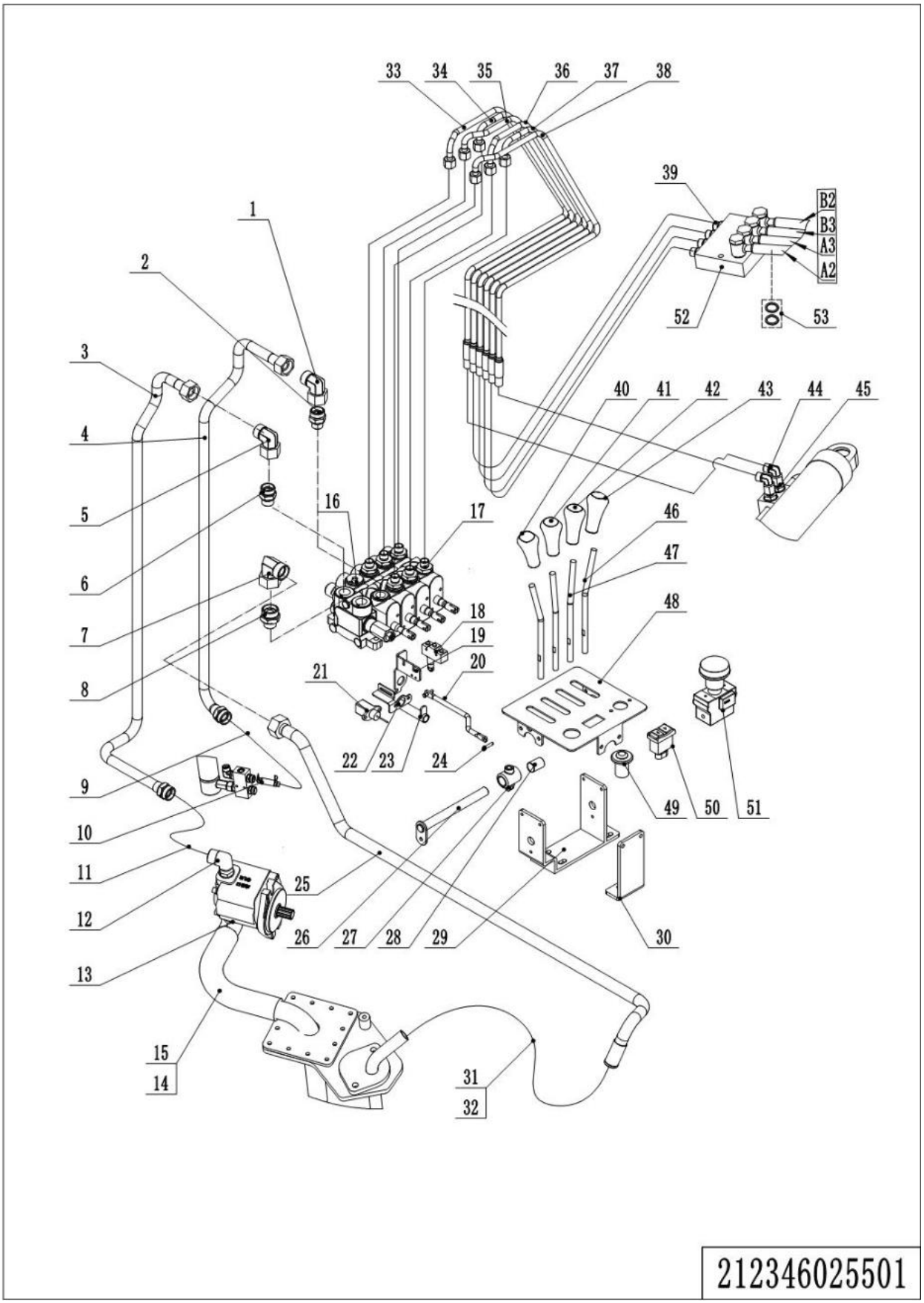

1= Supply as package. 2= Supply with constraints. 3= Phasing-out supply. 4= Supply as assembly. 5= Check other tables.

02 Hydraulic Circuit 4 (212346025501) Continuation

No.	Item Code	Mark	Item Description	Qty.	Substitute	Note
31	900200401003		Pipe	600		
32	911000600004		Hose Clamp	2		
33	212225520011		Hose	1		10-L1690-1SC-24%d
34	212225520012		Hose	1		10-L1305-1SC-24%d
35	212225520013		Hose	1		10-L1220-1SC-24%d
36	212225520014		Hose	1		10-L1195-1SC-24%d
37	212225520015		Hose	1		10-L1175-1SC-24%d
38	212225520016		Hose	1		10-L1640-1SC-24%d
39	950400400003		Joint	4		10-2xM16x1.5-24%d
40	253524520010		Knob	1		
41	216525020011		Knob	1		
42	253524520009		Knob	1		
43	253525020002		Knob	1		
44	950400200003		Joint	2		10-2xM16x1.5-24%d
45	950400400003		Joint	2		10-2xM16x1.5-24%d
46	212225520028		Joystick	2		
47	212225520029		Joystick	2		
48	212325510001		Close Plate	1		
49	920200700015		Switch	1		145000AB2138
50	920200800040		Switch	1		
51	920200100005		Emergency Button	1		
52	212225520002		Valve Block	1		
53	910800900005		Washer	8		

1= Supply as package. 2= Supply with constraints. 3= Phasing-out supply. 4= Supply as assembly. 5= Check other tables.

03 Reach Cylinder (212346020001)

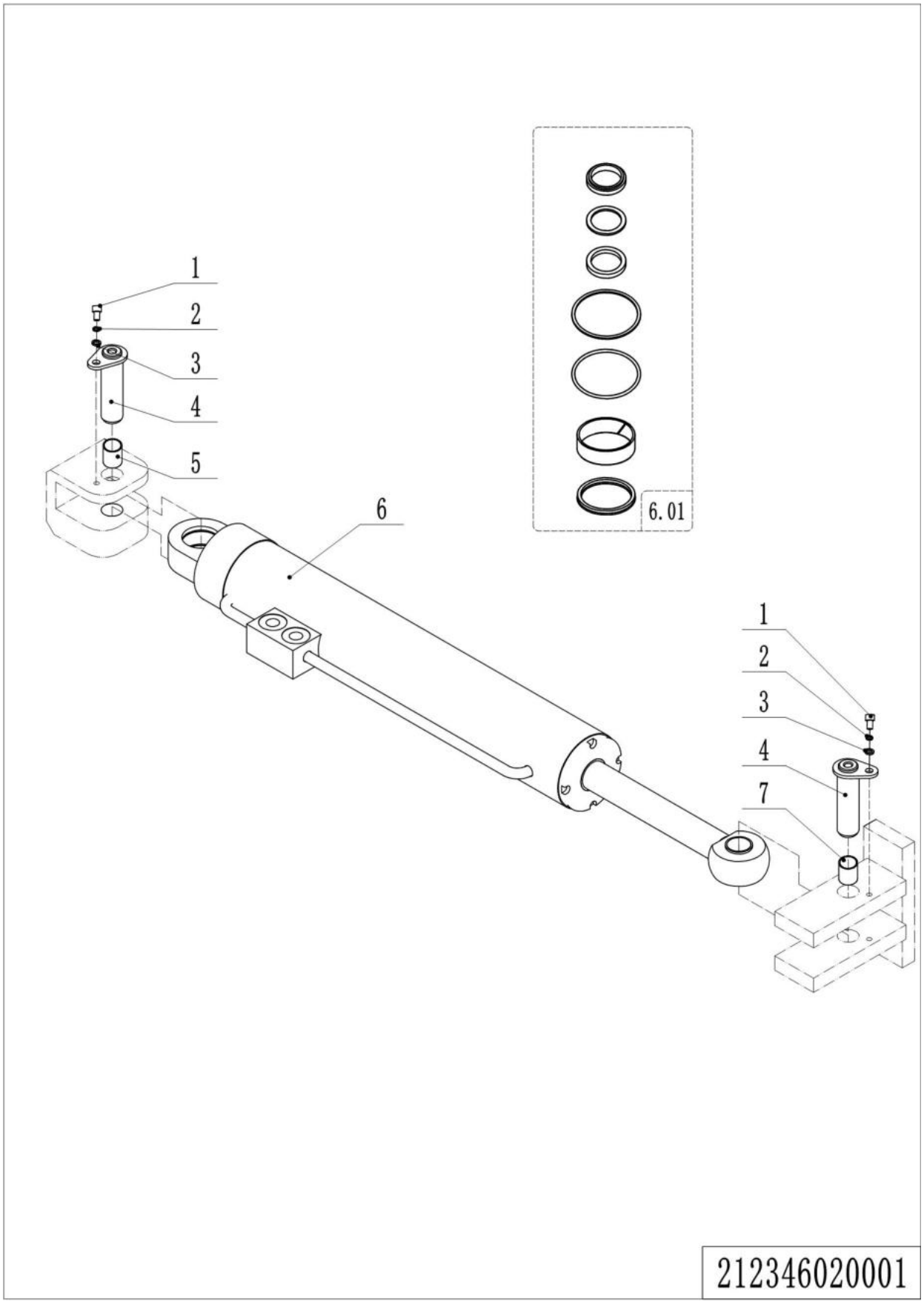

1= Supply as package. 2= Supply with constraints. 3= Phasing-out supply. 4= Supply as assembly. 5= Check other tables.

03 Reach Cylinder (212346020001)

No.	Item Code	Mark	Item Description	Qty.	Substitute	Note
1	910200200034		Screw	2		
2	910400500005		Spring Washer	2		
3	910400100005		Flat Washer	2		
4	212120010001		Pin	2		
5	212120020002		Bushing	1		
6	212120010000		Cylinder	1		
6.01	212198510004		Seal Kit	1		
7	212120020003		Bushing	1		

04 Oil Tank (212346019001)

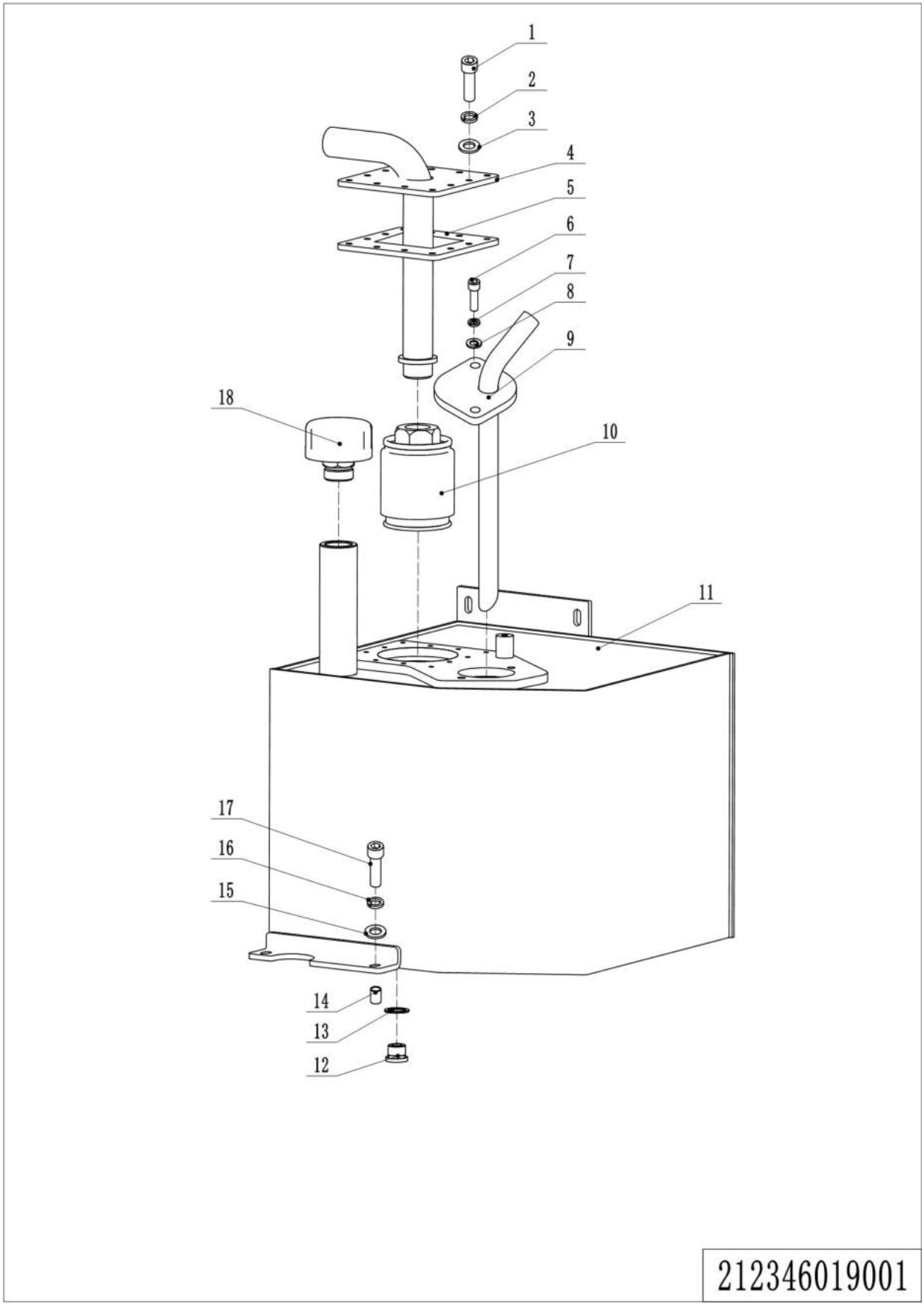

1= Supply as package. 2= Supply with constraints. 3= Phasing-out supply. 4= Supply as assembly. 5= Check other tables.

04 Oil Tank (212346019001)

No.	Item Code	Mark	Item Description	Qty.	Substitute	Note
1	910200200035		Screw	12		
2	910400500005		Spring Washer	12		
3	910400100005		Flat Washer	12		
4	212119010001		Cap-Tank	1		
5	212119020000		Sealing Gasket	1		
6	910200200077		Screw	2		
7	910400500007		Spring Washer	2		
8	910400100007		Flat Washer	2		
9	212319010000		Close Plate	1		
10	951000400001		Filter	1		
11	212119010000		Tank	1		
12	255019020015		Filler Plug	1		
13	910800900001		Bonded Washer	1		
14	532621520062		Crash Pad	1		
15	910400100006		Flat Washer	4		
16	910400500006		Spring Washer	4		
17	910200200058		Screw	4		
18	212119020019		Screw Plug	1		

1= Supply as package. 2= Supply with constraints. 3= Phasing-out supply. 4= Supply as assembly. 5= Check other tables.

05 Tilt Cylinder (212146020501)

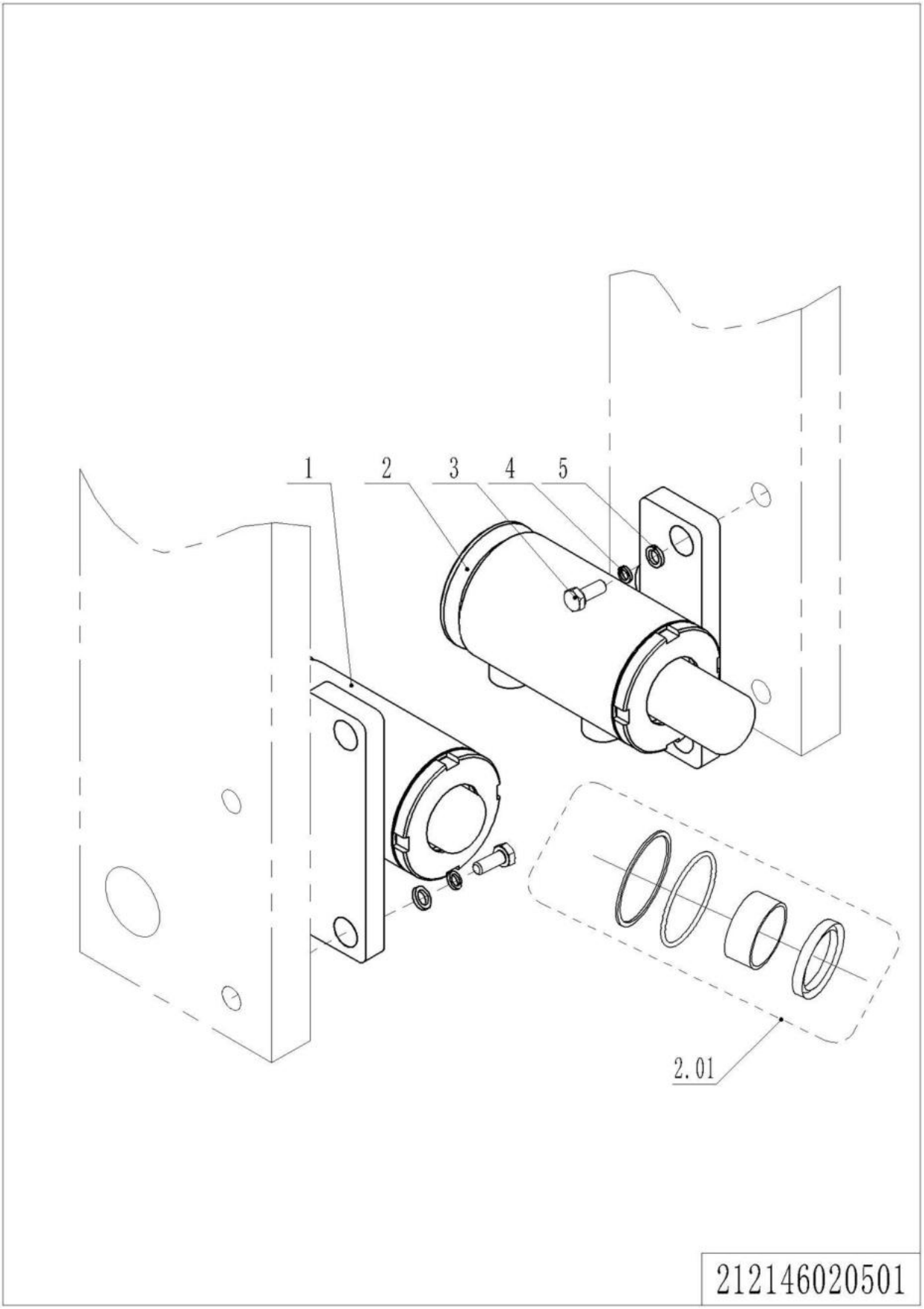

1= Supply as package. 2= Supply with constraints. 3= Phasing-out supply. 4= Supply as assembly. 5= Check other tables.

05 Tilt Cylinder (212146020501)

No.	Item Code	Mark	Item Description	Qty.	Substitute	Note
1	214120510001		Tilt Cylinder	1		
2	214120510000		Tilt Cylinder	1		
2.01	212198510000		Seal Kit	2		
3	910100300063		Bolt	4		
4	910400500009		Spring Washer	4		
5	910400100009		Flat Washer	4		

1= Supply as package. 2= Supply with constraints. 3= Phasing-out supply. 4= Supply as assembly. 5= Check other tables.

Chapter 3: Truck Frame

01 Chassis (212346021501)

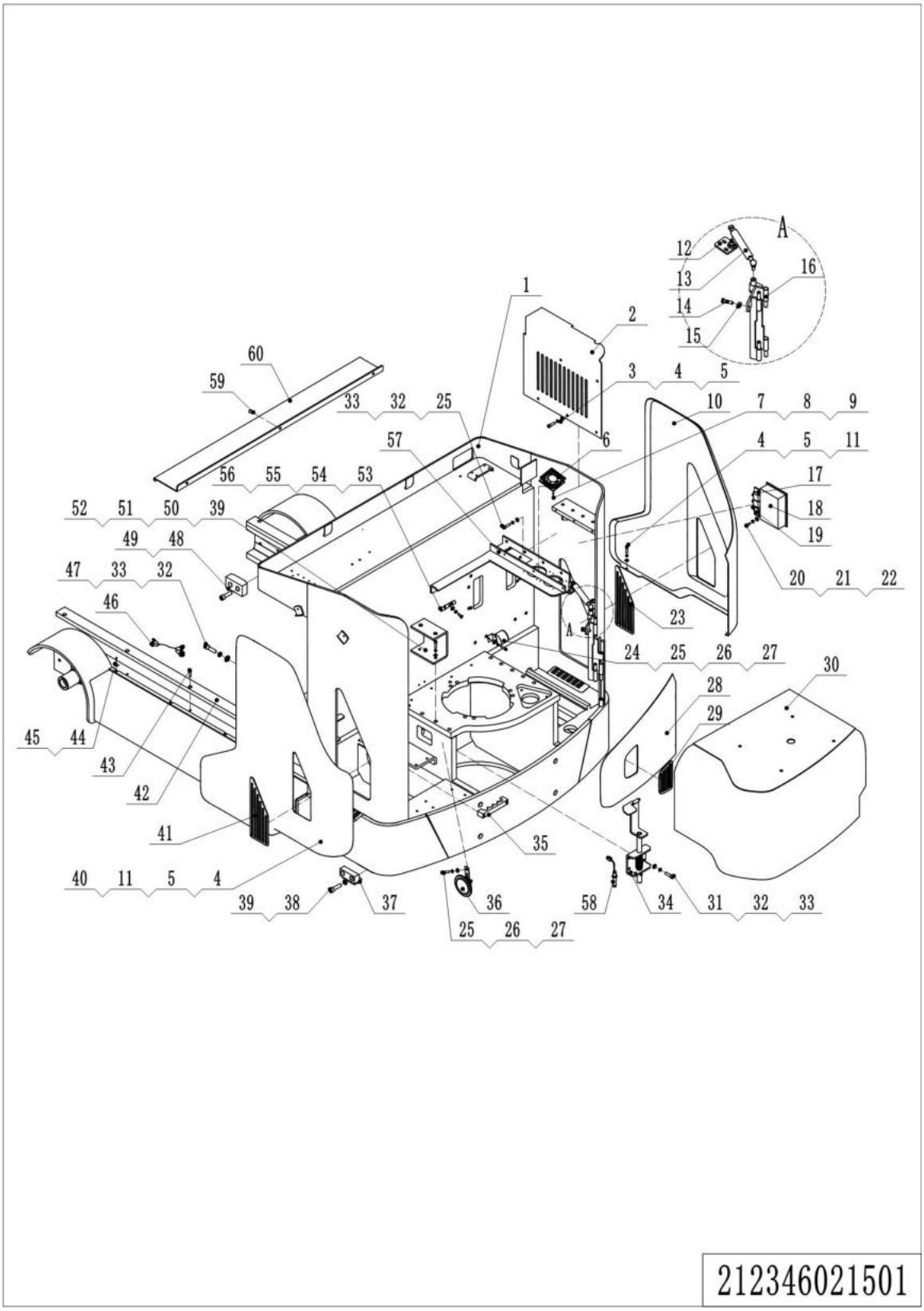

1= Supply as package. 2= Supply with constraints. 3= Phasing-out supply. 4= Supply as assembly. 5= Check other tables.

01 Chassis (212346021501)

No.	Item Code	Mark	Item Description	Qty.	Substitute	Note
1	212121510000		Chassis	1		
2	212121510005		Cover	1		
3	910200300017		Screw	6		
4	910400500005		Spring Washer	16		
5	910400100005		Flat Washer	16		
6	212133510018		Fan	2		
7	910200500028		Screw	8		
8	910400500003		Spring Washer	8		
9	910400100003		Flat Washer	8		
10	212121520092		Side Plate(right)	1		
11	910200200036		Screw	10		
12	212121510008		Fixing Base	1		
13	212121520048		Gas Spring	1		
14	910100300024		Bolt	1		
15	910300100006		Nut	1		
16	212121510002		Hinge	1		
17	920800100001		Relay	2		
18	921900100014		Converter	1		
19	922000100005		Lamp	1		
20	910200500037		Screw	7		
21	910400500004		Spring Washer	7		
22	910400100004		Flat Washer	7		
23	212121520101		Vent	1		
24	920500100002		Horn	1		
25	910200200055		Screw	8		
26	910400500006		Spring Washer	2		
27	910400100006		Flat Washer	2		
28	212121520091		Cover	1		
29	212121520102		Vent	1		
30	212121510009		Cover	1		

1= Supply as package. 2= Supply with constraints. 3= Phasing-out supply. 4= Supply as assembly. 5= Check other tables.

01 Chassis (212346021501) Continuation

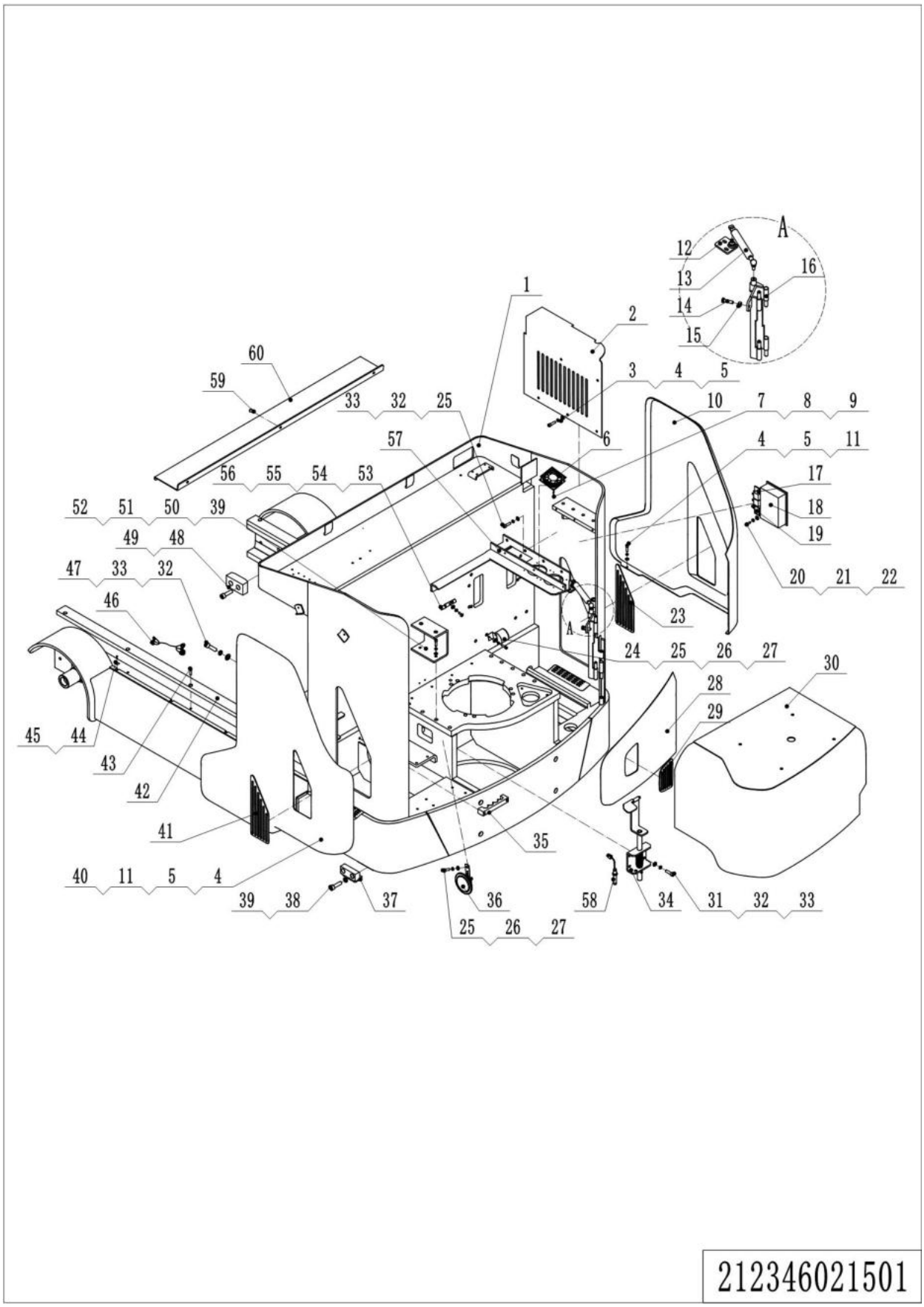

1= Supply as package. 2= Supply with constraints. 3= Phasing-out supply. 4= Supply as assembly. 5= Check other tables.

01 Chassis (212346021501) Continuation

No.	Item Code	Mark	Item Description	Qty.	Substitute	Note
31	910200200060		Screw	4		
32	910400500006		Spring Washer	12		
33	910400100006		Flat Washer	12		
34	/	5	Handle Assembly	1		212346021502
35	212121520064		Fixing Plate	1		
36	920500100001		Horn	1		
37	212121520068		Support Leg	2		
38	910200200099		Screw	4		
39	910400500008		Spring Washer	6		
40	212121520093		Side Plate(left)	1		
41	212121520100		Vent	1		
42	212121520049		Guide Rail	2		
43	910200200058		Screw	8		
44	212121520075		Press Plate	8		
45	910200300011		Screw	8		
46	212333010001		Wire Harness	1		
47	910200200065		Screw	2		
48	216521520001		Crash Pad	2		
49	910200200098		Screw	4		
50	212121520047		Fixing Plate	1		
51	910100300096		Bolt	2		
52	910400100008		Flat Washer	2		
53	921300300005		Holder	1		
54	910200500037		Screw	2		
55	910400500004		Spring Washer	2		
56	910400100004		Flat Washer	2		
57	212121510006		Fixing Base	1		
58	212133510007		Proximity Switch	1		Fi4-G12-OP6L-L70P
59	941100100001		Screw	3		560Ah
60	213121520011		Guard Plate	1		560Ah

1= Supply as package. 2= Supply with constraints. 3= Phasing-out supply. 4= Supply as assembly. 5= Check other tables.

02 Handle Assembly (212346021502)

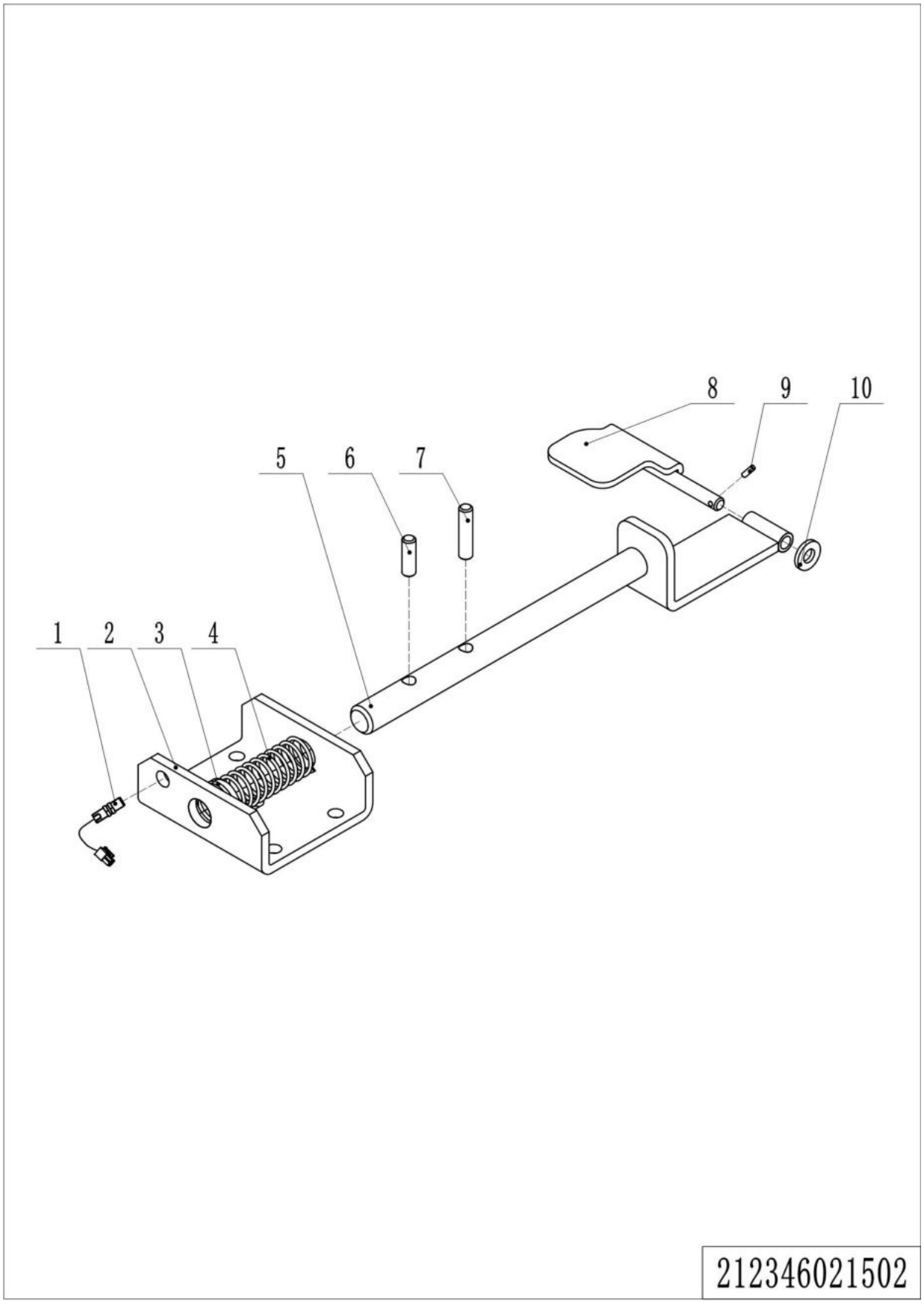

1= Supply as package. 2= Supply with constraints. 3= Phasing-out supply. 4= Supply as assembly. 5= Check other tables.

02 Handle Assembly (212346021502)

No.	Item Code	Mark	Item Description	Qty.	Substitute	Note
1	212133510007		Proximity Switch	1		
2	212121520050		Fixing Plate	1		
3	212121520052		Washer	1		
4	212121520051		Spring	1		
5	212121510004		Bracket	1		
6	910600400044		Spring Pin	1		
7	910600400046		Spring Pin	1		
8	212121510003		Bolt	1		
9	910600400002		Spring Pin	1		
10	910400100006		Flat Washer	1		

03 Overhead Guard (213346022001)

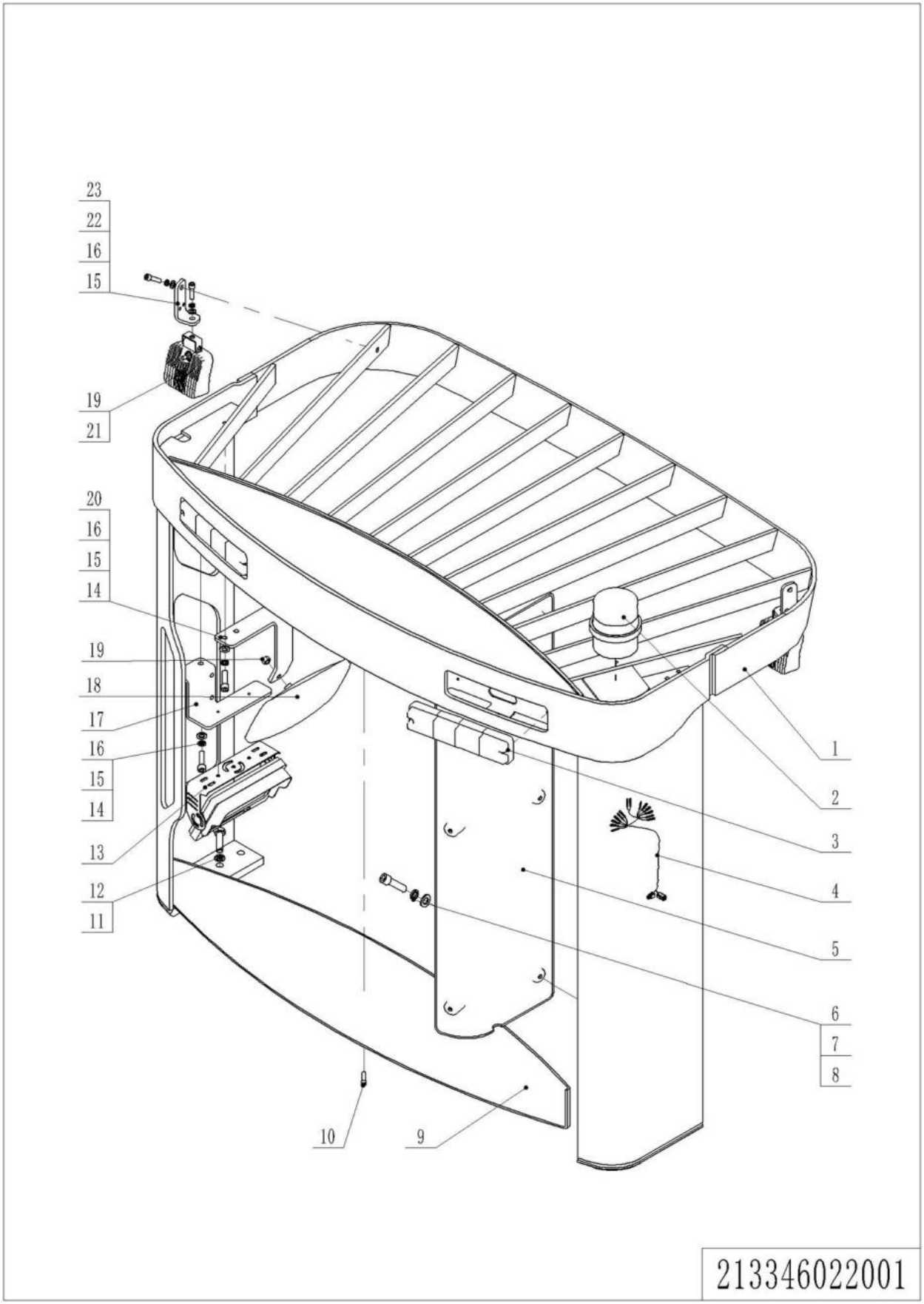

1= Supply as package. 2= Supply with constraints. 3= Phasing-out supply. 4= Supply as assembly. 5= Check other tables.

03 Overhead Guard (213346022001)

No.	Item Code	Mark	Item Description	Qty.	Substitute	Note
1	212122010000		Overhead Guard	1		
2	922000100004		Lamp	1		
3	922000100003		Lamp	2		
4	212133010013		Wire Harness	1		
5	212122020021		Cover	1		
6	910200300017		Screw	6		
7	910400500005		Spring Washer	6		
8	910400100005		Flat Washer	6		
9	212122020020		Cover	1		
10	910200300017		Screw	1		
11	910200300037		Screw	8		
12	910400500008		Spring Washer	8		
13	/	5	Monitor	1		
14	910200200055		Screw	4		
15	910400500006		Spring Washer	8		
16	910400100006		Flat Washer	8		
17	212122020018		Bolt	1		
18	940800100001		Rearview Mirror	1		
19	910300100006		Nut	5		
20	212122020022		Mirror	1		
21	922000100016		Lamp	2		
22	910200200058		Screw	4		
23	212122020023		Mounting Plate	2		

1= Supply as package. 2= Supply with constraints. 3= Phasing-out supply. 4= Supply as assembly. 5= Check other tables.

04 Platform (212146018001)

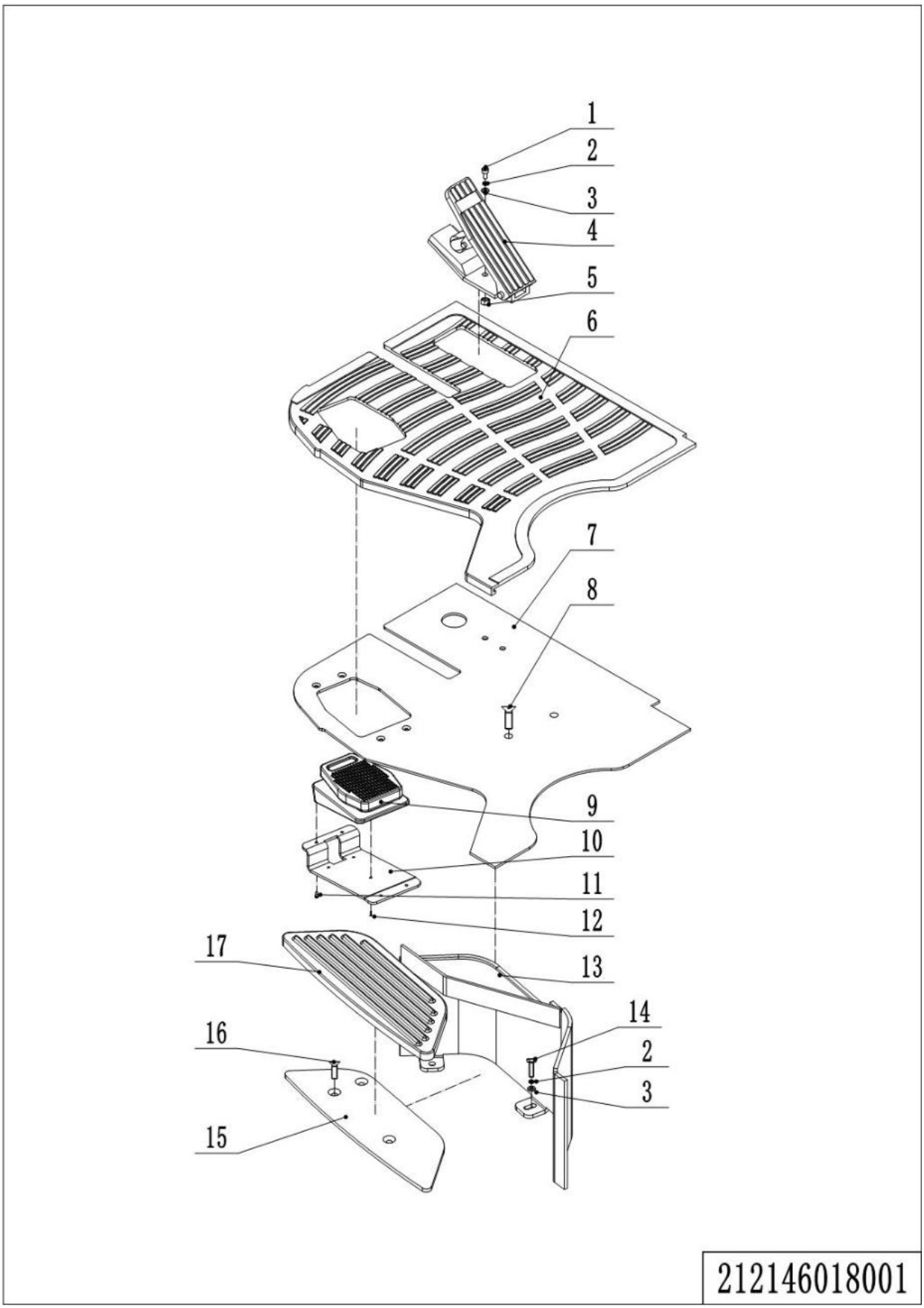

1= Supply as package. 2= Supply with constraints. 3= Phasing-out supply. 4= Supply as assembly. 5= Check other tables.

04 Platform (212146018001)

No.	Item Code	Mark	Item Description	Qty.	Substitute	Note
1	910200200057		Screw	2		
2	910400100006		Flat Washer	4		
3	910400500006		Spring Washer	4		
4	921700100005		Accelerator	1		
5	910300100006		Nut	2		
6	212118020000		Mat	1		
7	213318020001		Platform	1		
8	910200400033		Screw	2		
9	212133510019		Foot Switch	1		
10	212118020008		Mounting Plate	1		
11	910200400009		Screw	4		
12	212198520048		Screw,M3.5x16	3		
13	212118010000		Bracket	1		
14	910100300022		Bolt	2		
15	212118010001		Platform	1		
16	910200400026		Screw	3		
17	212118020002		Mat	1		

1= Supply as package. 2= Supply with constraints. 3= Phasing-out supply. 4= Supply as assembly. 5= Check other tables.

05 Seat (213346037501)

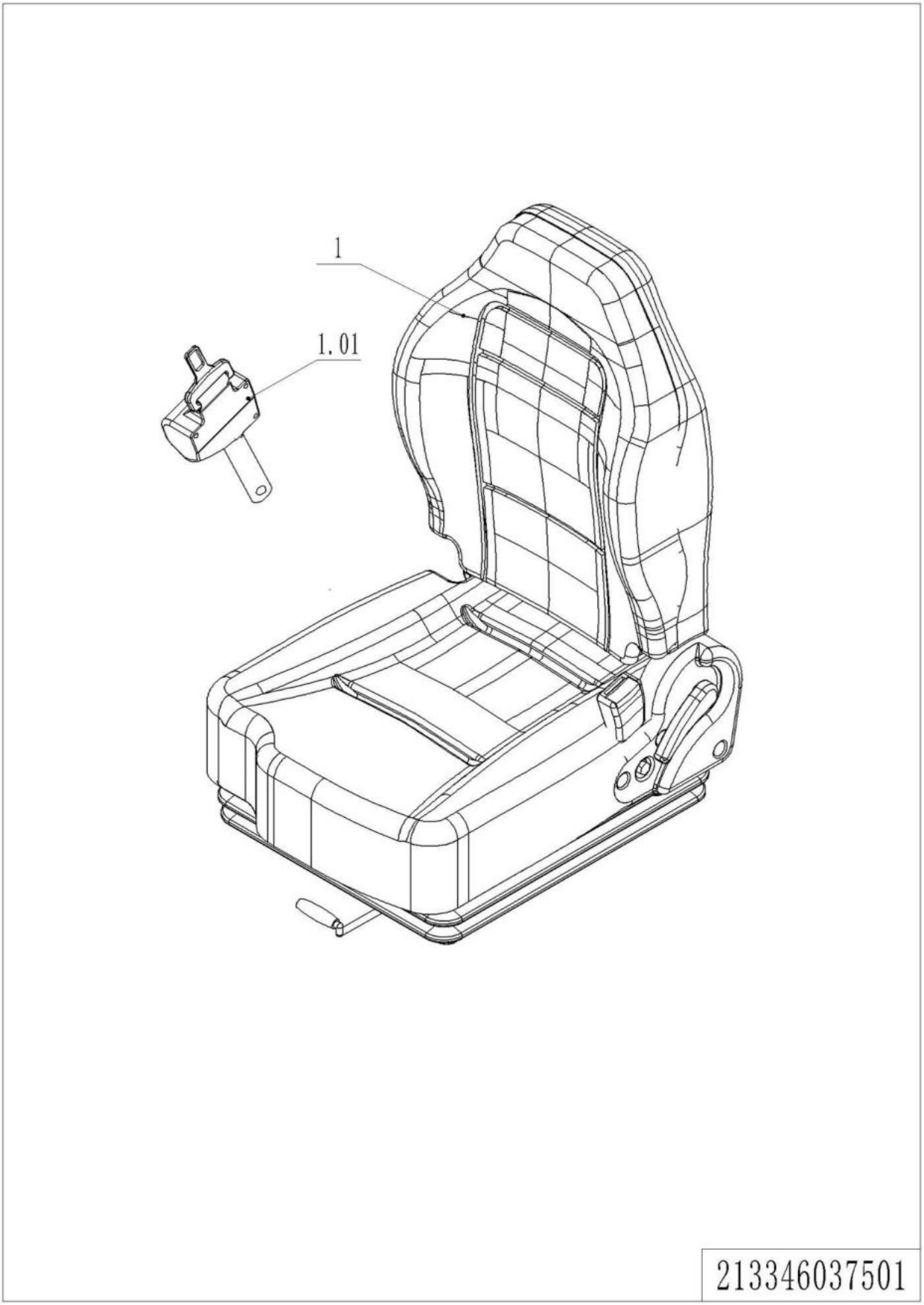

1= Supply as package. 2= Supply with constraints. 3= Phasing-out supply. 4= Supply as assembly. 5= Check other tables.

05 Seat (213346037501)

No.	Item Code	Mark	Item Description	Qty.	Substitute	Note
1	213037510000		Seat	1		
1.01	213098510052		Safety Belt	1		

1= Supply as package. 2= Supply with constraints. 3= Phasing-out supply. 4= Supply as assembly. 5= Check other tables.

Chapter 4: Mast

01 Outer Mast (212346044501)

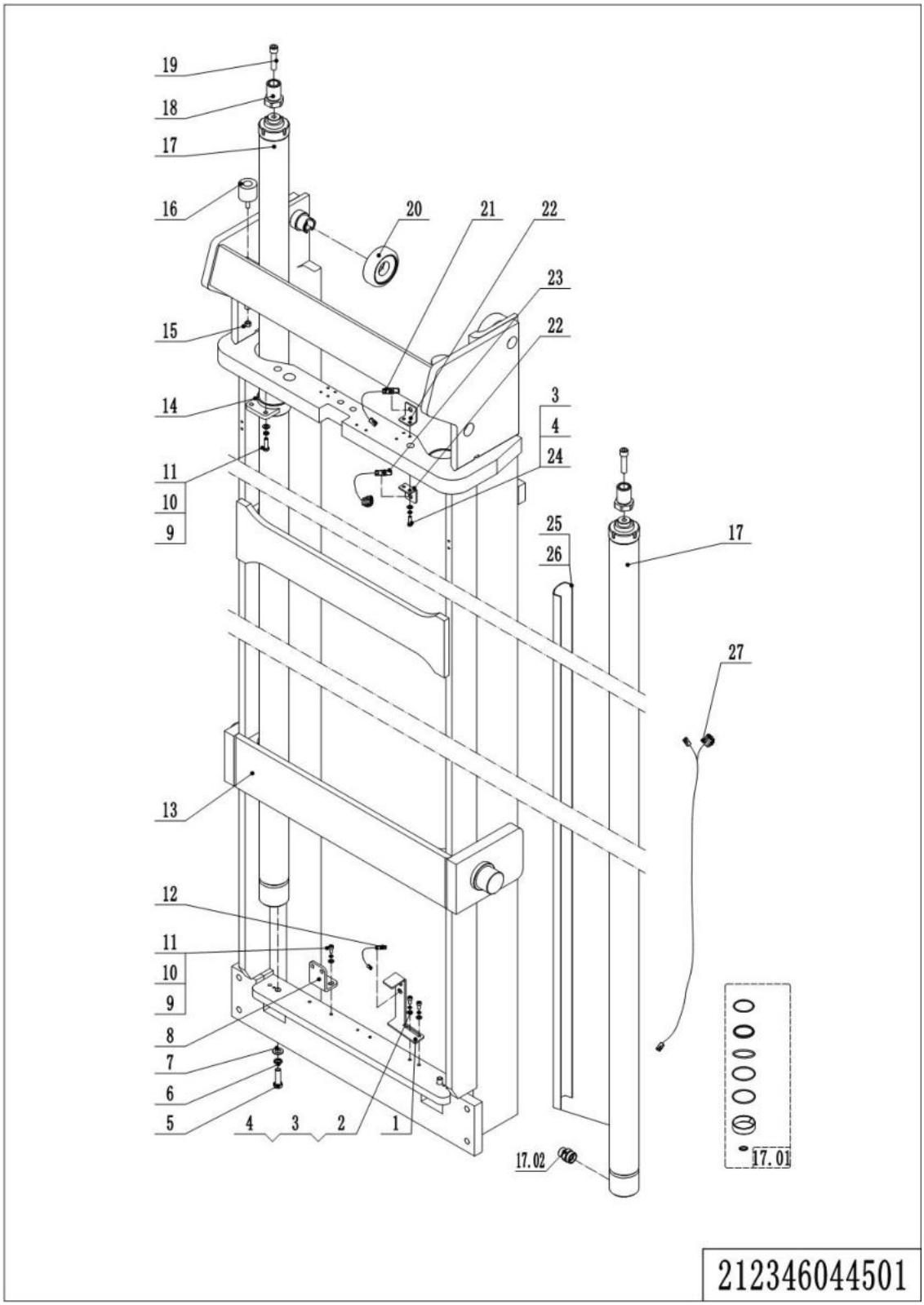

01 Outer Mast (212346044501)

No.	Item Code	Mark	Item Description	Qty.	Substitute	Note
1	212144520297		Fixing Plate	1		
2	910200200033		Screw	2		
3	910400500005		Spring Washer	6		
4	910400100005		Flat Washer	6		
5	910100400012		Bolt	2		
6	910400500008		Spring Washer	2		
7	910400100008		Flat Washer	2		
8	212144520062		Fixing Plate	1		
9	910200200058		Screw	6		
10	910400500006		Spring Washer	6		
11	910400100006		Flat Washer	6		
12	212133510005		Proximity Switch	1		
13	212144510005		Outer Mast(4500)	1		4500
13	212144510006		Outer Mast(5000)			5000
13	212144510007		Outer Mast(5500)			5500
13	212144510008		Outer Mast(6000)			6000
13	212144510009		Outer Mast(6500)			6500
13	212144510010		Outer Mast(7000)			7000
13	212144510011		Outer Mast(7500)			7500
13	212144510012		Outer Mast(8000)			8000
13	212144510013		Outer Mast(8500)			8500
13	212144510014		Outer Mast(9000)			9000
13	212144510015		Outer Mast(9500)			9500
14	212144510048		Fixing Base	2		
15	910300500004		Nut	2		
16	212144520065		Crash Pad	2		
17	212144510055		Cylinder	2		4500
17	212144510056		Cylinder	2		5000
17	212144510057		Cylinder	2		5500
17	212144510058		Cylinder	2		6000

1= Supply as package. 2= Supply with constraints. 3= Phasing-out supply. 4= Supply as assembly. 5= Check other tables.

01 Outer Mast (212346044501) Continuation1

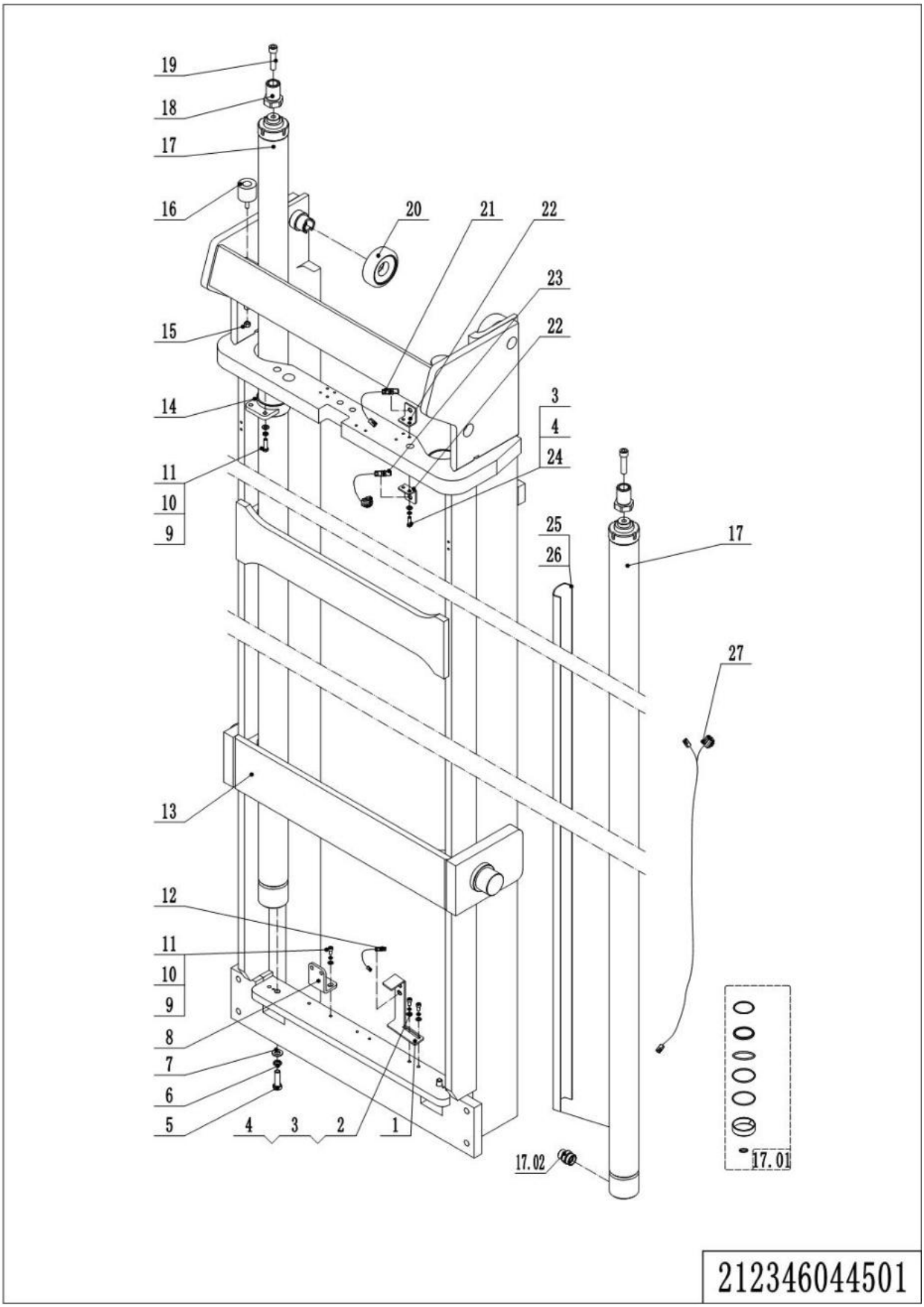

1= Supply as package. 2= Supply with constraints. 3= Phasing-out supply. 4= Supply as assembly. 5= Check other tables.

01 Outer Mast (212346044501) Continuation1

No.	Item Code	Mark	Item Description	Qty.	Substitute	Note
17	212144510059		Cylinder	2		6500
17	212144510060		Cylinder	2		7000
17	212144510061		Cylinder	2		7500
17	212144510062		Cylinder	2		8000
17	212144510063		Cylinder	2		8500
17	212144510064		Cylinder	2		9000
17	212144510065		Cylinder	2		9500
17.01	212198510002		Seal Kit	1		
17.02	212198520022		Anti-explosion Valve	1		
18	212144520060		Barrel	2		
19	910100300054		Bolt	2		
20	940200300052		Compound Roller	2		
21	212133510008		Proximity Switch	1		
22	212144520061		Fixing Plate	2		
23	212133510006		Proximity Switch	1		
24	910200500052		Screw	4		
25	212144520250		Shield	1		Several
25	212144520251		Shield	1		Several
25	212144520252		Shield	1		Several
25	212144520253		Shield	1		Several
25	212144520295		Shield	1		Several
26	911000600007		Hose Clamp	6		Several
27	212133010019		Wire Harness	1		4500
27	212133010020		Wire Harness	1		5000
27	212133010022		Wire Harness	1		5500
27	212133010023		Wire Harness	1		6000
27	212133010024		Wire Harness	1		6500
27	212133010025		Wire Harness	1		7000
27	212133010026		Wire Harness	1		7500
27	212133010027		Wire Harness	1		8000

01 Outer Mast (212346044501) Continuation 2

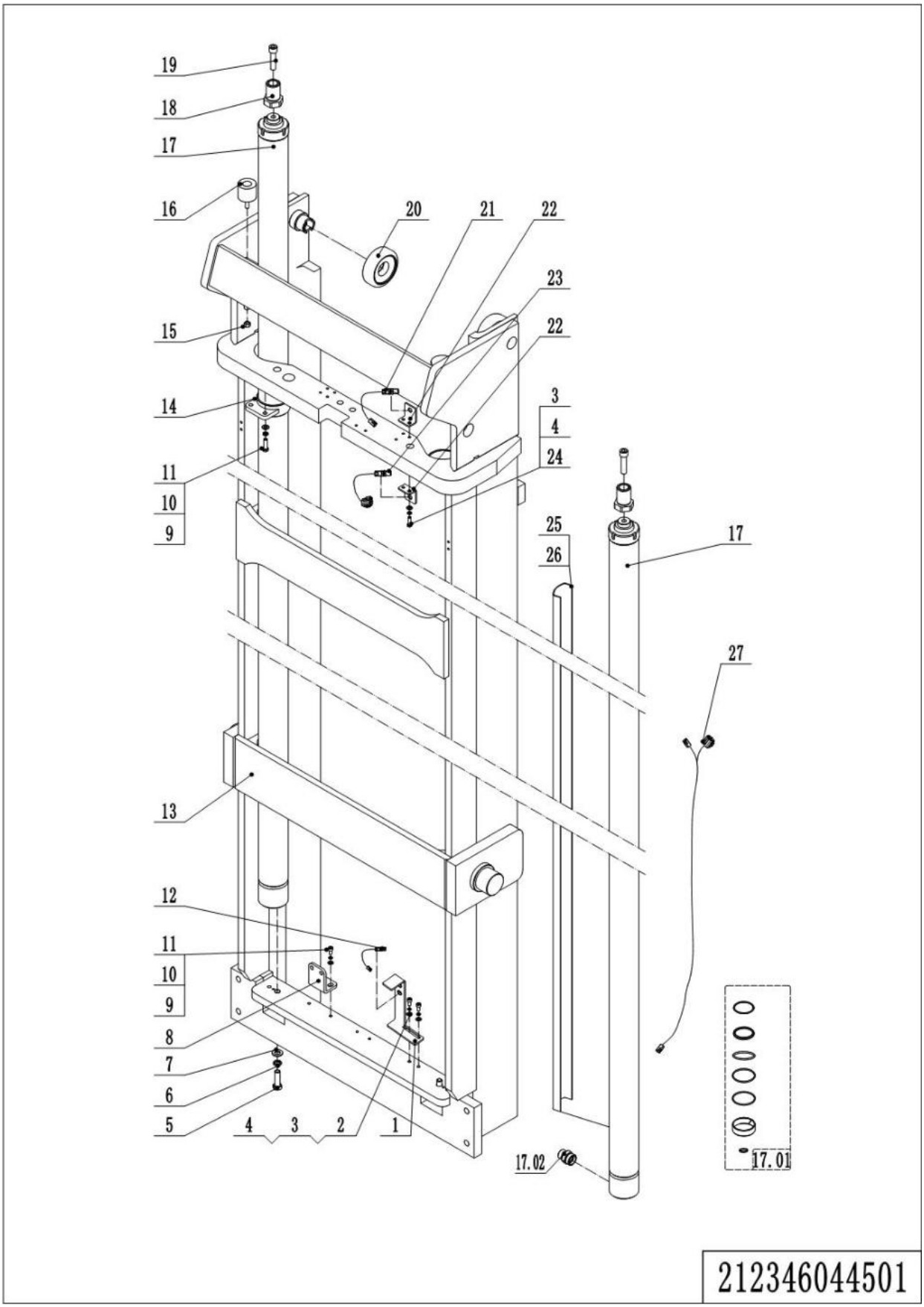

1= Supply as package. 2= Supply with constraints. 3= Phasing-out supply. 4= Supply as assembly. 5= Check other tables.

01 Outer Mast (212346044501) Continuation 2

No.	Item Code	Mark	Item Description	Qty.	Substitute	Note
27	212133010028		Wire Harness	1		8500
27	212133010029		Wire Harness	1		9000
27	212133010017		Wire Harness	1		9500

02 Middle Mast (212146044502)

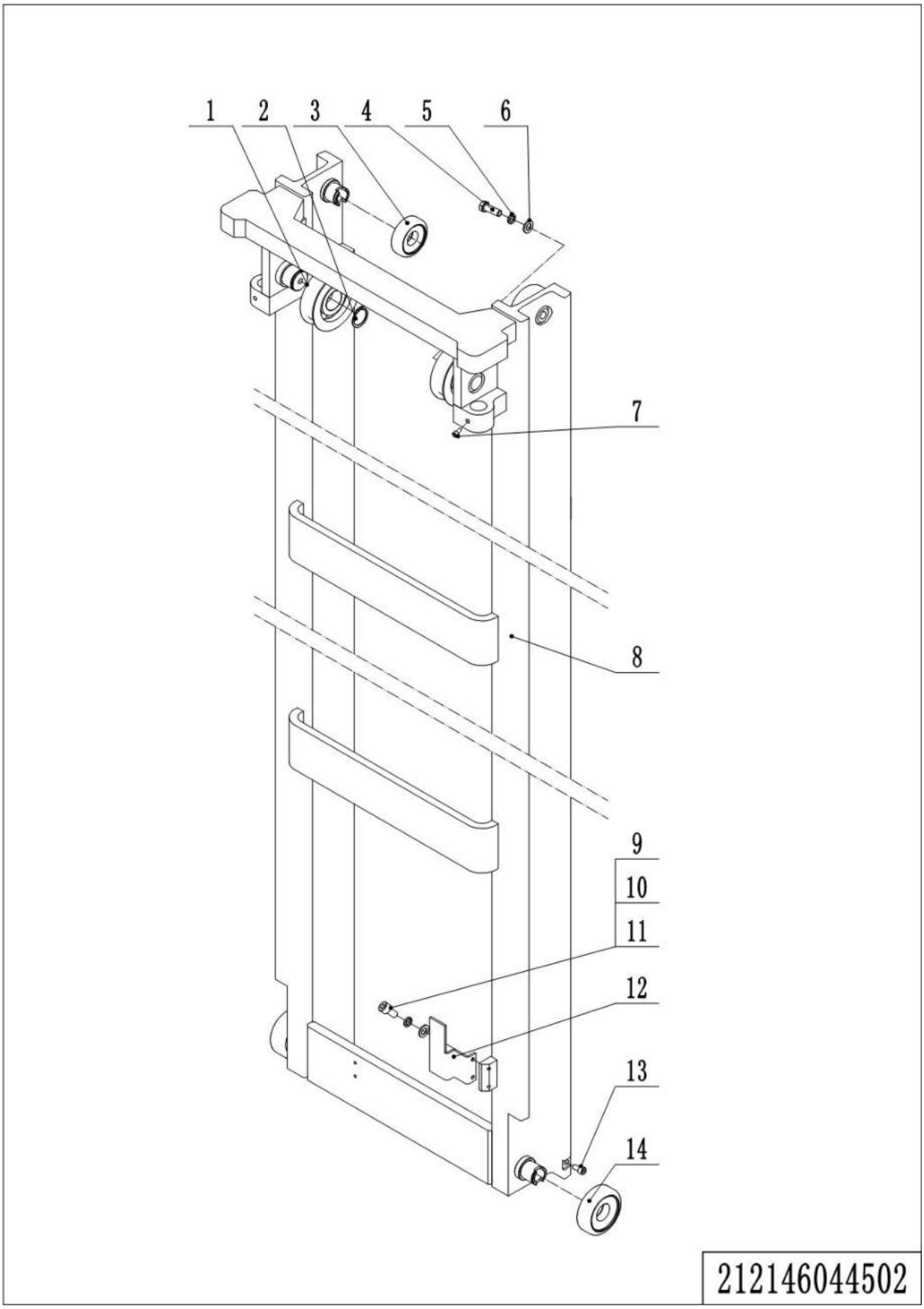

1= Supply as package. 2= Supply with constraints. 3= Phasing-out supply. 4= Supply as assembly. 5= Check other tables.

02 Middle Mast (212146044502)

No.	Item Code	Mark	Item Description	Qty.	Substitute	Note
1	940200500001		Sprocket Bearing	2		
2	910401300020		Circlip	2		
3	940200300046		Compound Roller	2		
4	910100300051		Bolt	1		
5	910400500008		Spring Washer	1		
6	910400100008		Flat Washer	1		
7	910200900014		Screw	2		
8	212144510020		Middle Mast(4500)	1		4500
8	212144510021		Middle Mast(5000)	1		5000
8	212144510022		Middle Mast(5500)	1		5500
8	212144510023		Middle Mast(6000)	1		6000
8	212144510024		Middle Mast(6500)	1		6500
8	212144510025		Middle Mast(7000)	1		7000
8	212144510026		Middle Mast(7500)	1		7500
8	212144510027		Middle Mast(8000)	1		8000
8	212144510028		Middle Mast(8500)	1		8500
8	212144510029		Middle Mast(9000)	1		9000
8	212144510030		Middle Mast(9500)	1		9500
9	910200200036		Screw	2		
10	910400500005		Spring Washer	2		
11	910400100005		Flat Washer	2		
12	212144520066		Fixing Plate	1		
13	910200200096		Screw	2		
14	940200300052		Compound Roller	2		

1= Supply as package. 2= Supply with constraints. 3= Phasing-out supply. 4= Supply as assembly. 5= Check other tables.

03 Inner Mast (212346044503)

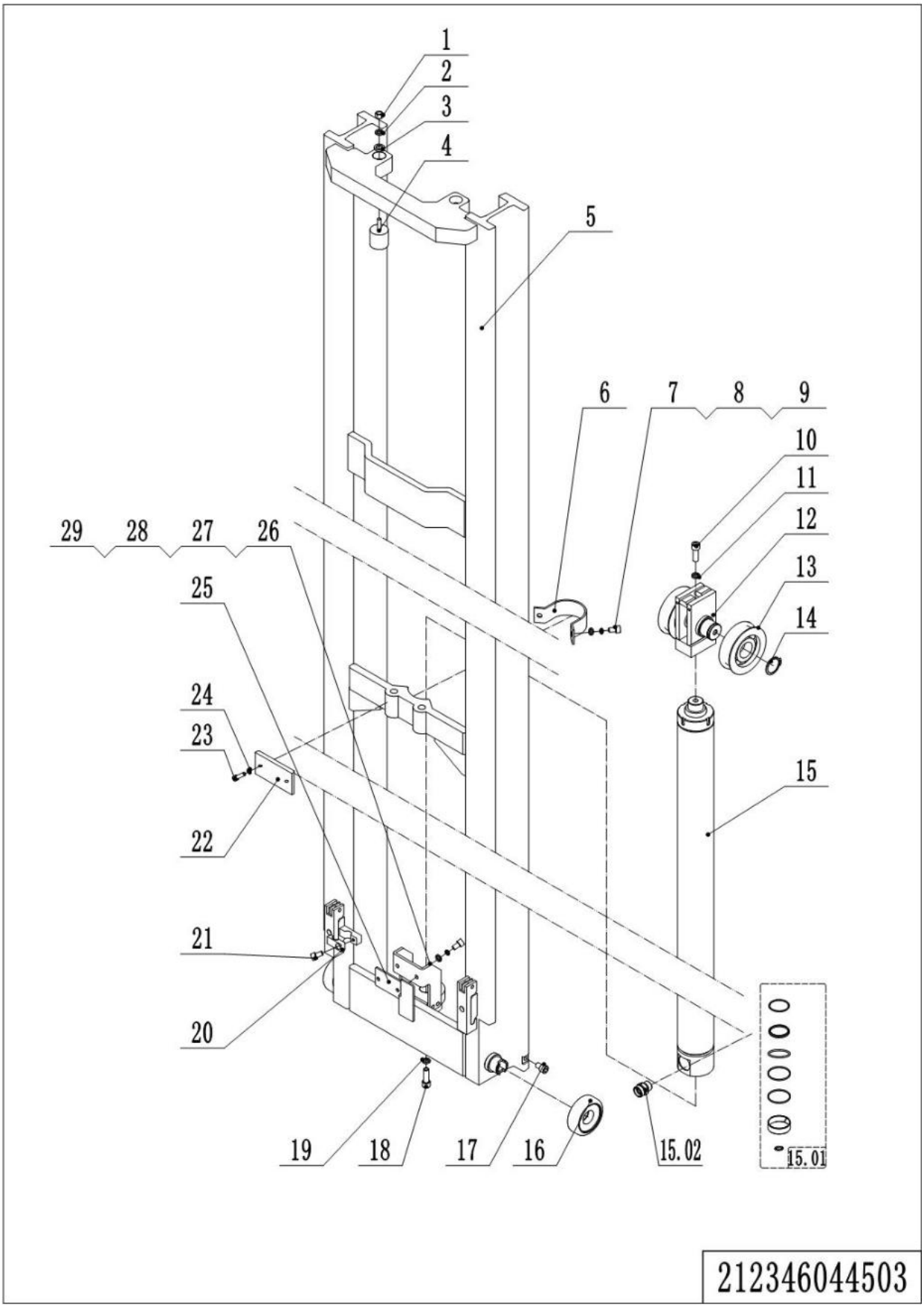

1= Supply as package. 2= Supply with constraints. 3= Phasing-out supply. 4= Supply as assembly. 5= Check other tables.

03 Inner Mast (212346044503)

No.	Item Code	Mark	Item Description	Qty.	Substitute	Note
1	910300500004		Nut	2		
2	910400500006		Spring Washer	3		
3	910400100006		Flat Washer	2		
4	212144520242		Crash Pad	2		
5	212144510035		Inner Mast(4500)	1		4500
5	212144510036		Inner Mast(5000)	1		5000
5	212144510037		Inner Mast(5500)	1		5500
5	212144510038		Inner Mast(6000)	1		6000
5	212144510039		Inner Mast(6500)	1		6500
5	212144510040		Inner Mast(7000)	1		7000
5	212144510041		Inner Mast(7500)	1		7500
5	212144510042		Inner Mast(8000)	1		8000
5	212144510043		Inner Mast(8500)	1		8500
5	212144510044		Inner Mast(9000)	1		9000
5	212144510045		Inner Mast(9500)	1		9500
6	212144520068		Fixing Plate	1		
7	910100200005		Bolt	2		
8	910400500007		Spring Washer	2		
9	910400100007		Flat Washer	2		
10	910200200099		Screw	2		
11	910400500008		Spring Washer	4		
12	212144510049		Yoke	1		
13	940200500001		Sprocket Bearing	2		
14	910401300020		Circlip	2		
15	212144510070		Cylinder	1		4500
15	212144510071		Cylinder	1		5000
15	212144510072		Cylinder	1		5500
15	212144510073		Cylinder	1		6000
15	212144510074		Cylinder	1		6500
15	212144510075		Cylinder	1		7000

1= Supply as package. 2= Supply with constraints. 3= Phasing-out supply. 4= Supply as assembly. 5= Check other tables.

03 Inner Mast (212346044503) Continuation

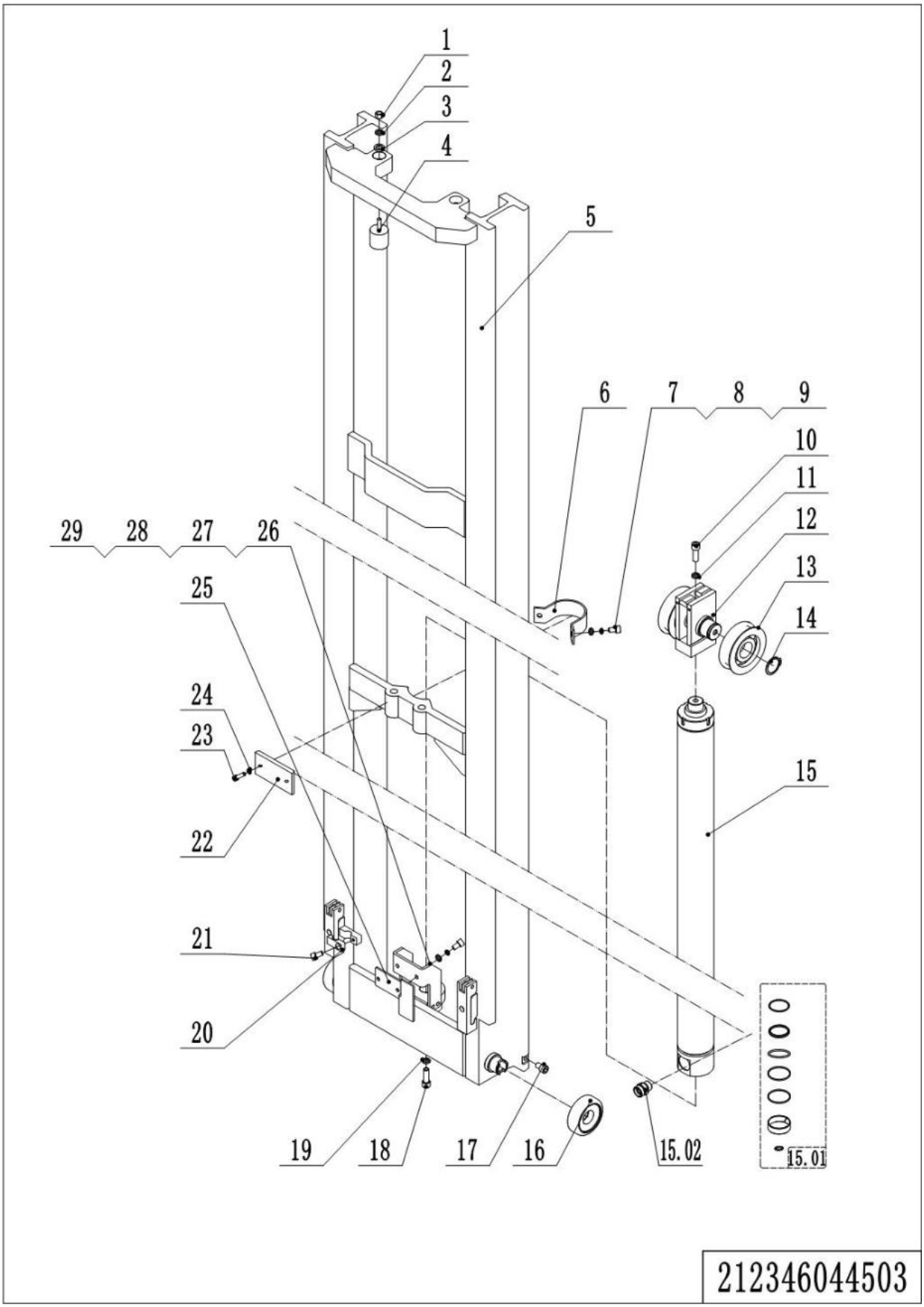

1= Supply as package. 2= Supply with constraints. 3= Phasing-out supply. 4= Supply as assembly. 5= Check other tables.

03 Inner Mast (212346044503) Continuation

No.	Item Code	Mark	Item Description	Qty.	Substitute	Note
15	212144510076		Cylinder	1		7500
15	212144510077		Cylinder	1		8000
15	212144510078		Cylinder	1		8500
15	212144510079		Cylinder	1		9000
15	212144510080		Cylinder	1		9500
15.01	212198510003		Seal Kit	1		
15.02	212198520036		Anti-explosion Valve	1		
16	940200300046		Compound Roller	2		
17	910200200096		Screw	2		
18	910100200005		Bolt	1		
19	910400100008		Flat Washer	1		
20	213044520110		Pipe Clip	1		
21	910200200055		Screw	1		
22	212144520236		Press Plate	1		
23	910200500051		Screw	2		
24	910400500005		Spring Washer	2		
25	212144520298		Mounting Plate	1		
26	212144520049		Mounting Base	1		
27	910400100006	1	Flat Washer	2		
28	910400500006	1	Spring Washer	2		
29	910200200058	1	Screw	2		

1= Supply as package. 2= Supply with constraints. 3= Phasing-out supply. 4= Supply as assembly. 5= Check other tables.

04 Reach Frame (212346044504)

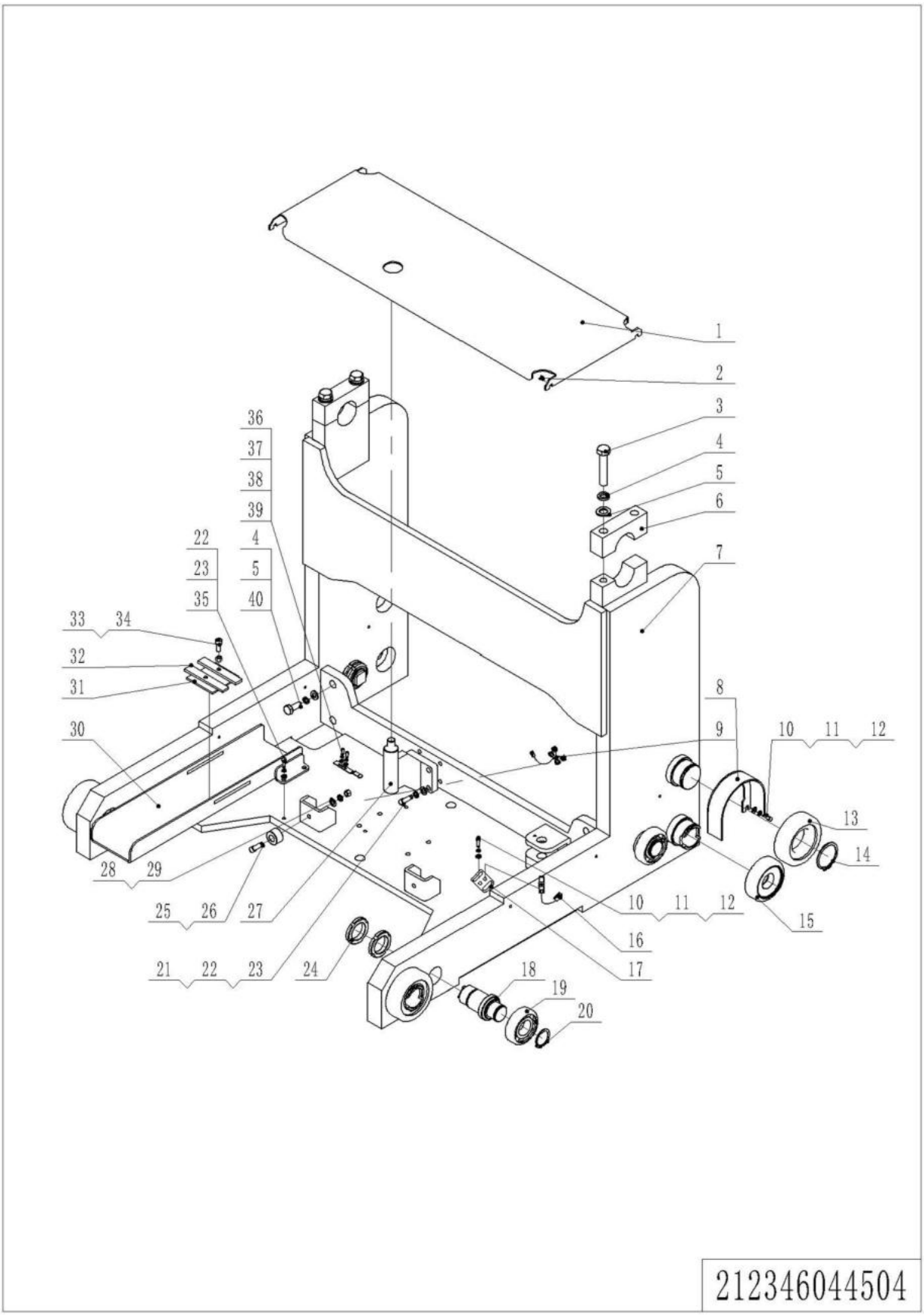

1= Supply as package. 2= Supply with constraints. 3= Phasing-out supply. 4= Supply as assembly. 5= Check other tables.

04 Reach Frame (212346044504)

No.	Item Code	Mark	Item Description	Qty.	Substitute	Note
1	212144520234		Close Plate	1		
2	910100300009		Bolt	4		
3	910100400039		Bolt	4		
4	910400500010		Spring Washer	8		
5	910400100010		Flat Washer	8		
6	213344520003		Fixing Plate	2		
7	212144510050		Frame	1		
8	212144510081		Protective Cover	2		
9	212333010002		Wire Harness	1		
10	910200200036		Screw	10		
11	910400100005		Flat Washer	10		
12	910400500005		Spring Washer	10		
13	940200100042		Main Roller	2		
14	910401300026		Circlip	6		
15	940200300042		Compound Roller	4		
16	212133510002		Proximity Switch	1		
17	212144520235		Fixing Plate	1		
18	212144520218		Axle	4		
19	940200100008		Main Roller	4		
20	910401300018		Circlip	4		
21	910200200079		Screw	4		
22	910400100007		Flat Washer	4		
23	910400500007		Spring Washer	4		
24	910300800008		Nut	8		
25	532621520062		Crash Pad	2		
26	910200200060		Screw	2		
27	212144510051		Fixing Base	1		
28	910300500004		Nut	2		
29	910400100006		Flat Washer	8		
30	212125010000		Guide Slot	1		

1= Supply as package. 2= Supply with constraints. 3= Phasing-out supply. 4= Supply as assembly. 5= Check other tables.

04 Reach Frame (212346044504) Continuation

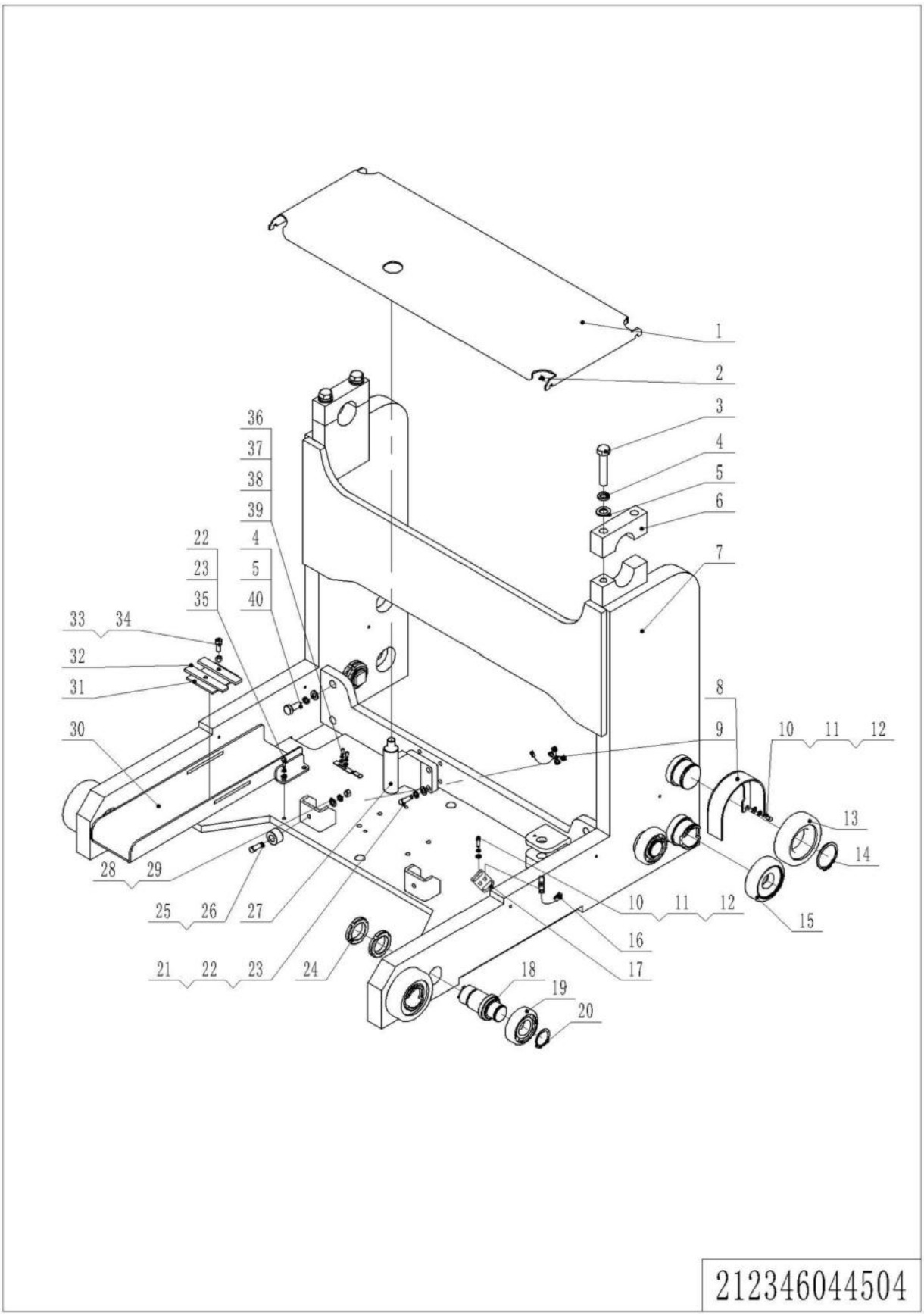

04 Reach Frame (212346044504) Continuation

No.	Item Code	Mark	Item Description	Qty.	Substitute	Note
31	212125020011		Plate	1		
32	212125020030		Press Plate	2		
33	910200200058		Screw	4		
34	910300100006		Nut	4		
35	910200200057		Screw	4		
36	910200500037		Screw	8		
37	910400500004		Spring Washer	8		
38	910400100004		Flat Washer	8		
39	921300300005		Holder	4		
40	910100200014		Bolt	4		

05 Fork Carriage (212346044505)

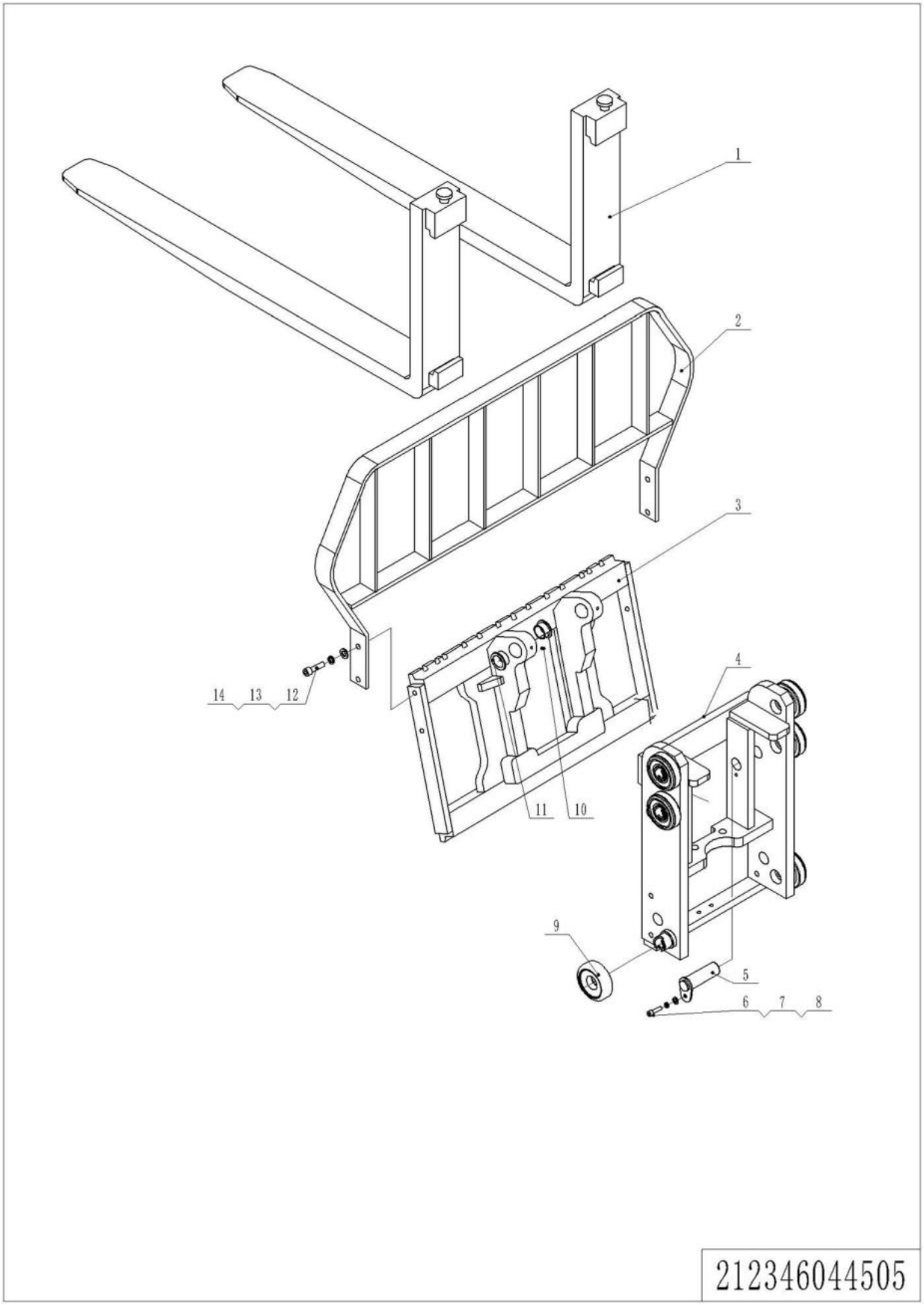

1= Supply as package. 2= Supply with constraints. 3= Phasing-out supply. 4= Supply as assembly. 5= Check other tables.

05 Fork Carriage (212346044505)

No.	Item Code	Mark	Item Description	Qty.	Substitute	Note
1	940100100008		Fork120x40x1070	2		1070
1	940100100009		Fork120x40x1220	2		1220
1	940100100010		Fork120x40x1150	2		1150
1	940100100011		Fork120x40x1370	2		1370
1	940100100012		Fork120x40x1520	2		1520
1	940100100030		Fork120x40x1820	2		1820
1	940100100037		Fork120x40x1100	2		1100
2	212140510000		Load Backrest	1		
3	212138010005		Fork	1		
3	940100200006		Side Shifter	1		Side Shift Dedicated
4	212138010000		Carriage	1		
5	212138010003		Pin	2		
6	910200300025		Screw	2		
7	910400100006		Flat Washer	2		
8	910400500019		Spring Washer	2		
9	940200300040		Compound Roller	6		
10	911200100002		Oil Cup	2		
11	940500400013		Bearing	4		
12	910100300050		Bolt	4		
13	910400500008		Spring Washer	4		
14	910400100008		Flat Washer	4		

1= Supply as package. 2= Supply with constraints. 3= Phasing-out supply. 4= Supply as assembly. 5= Check other tables.

06 Mast Hydraulic Circuit 3 (212346044506)

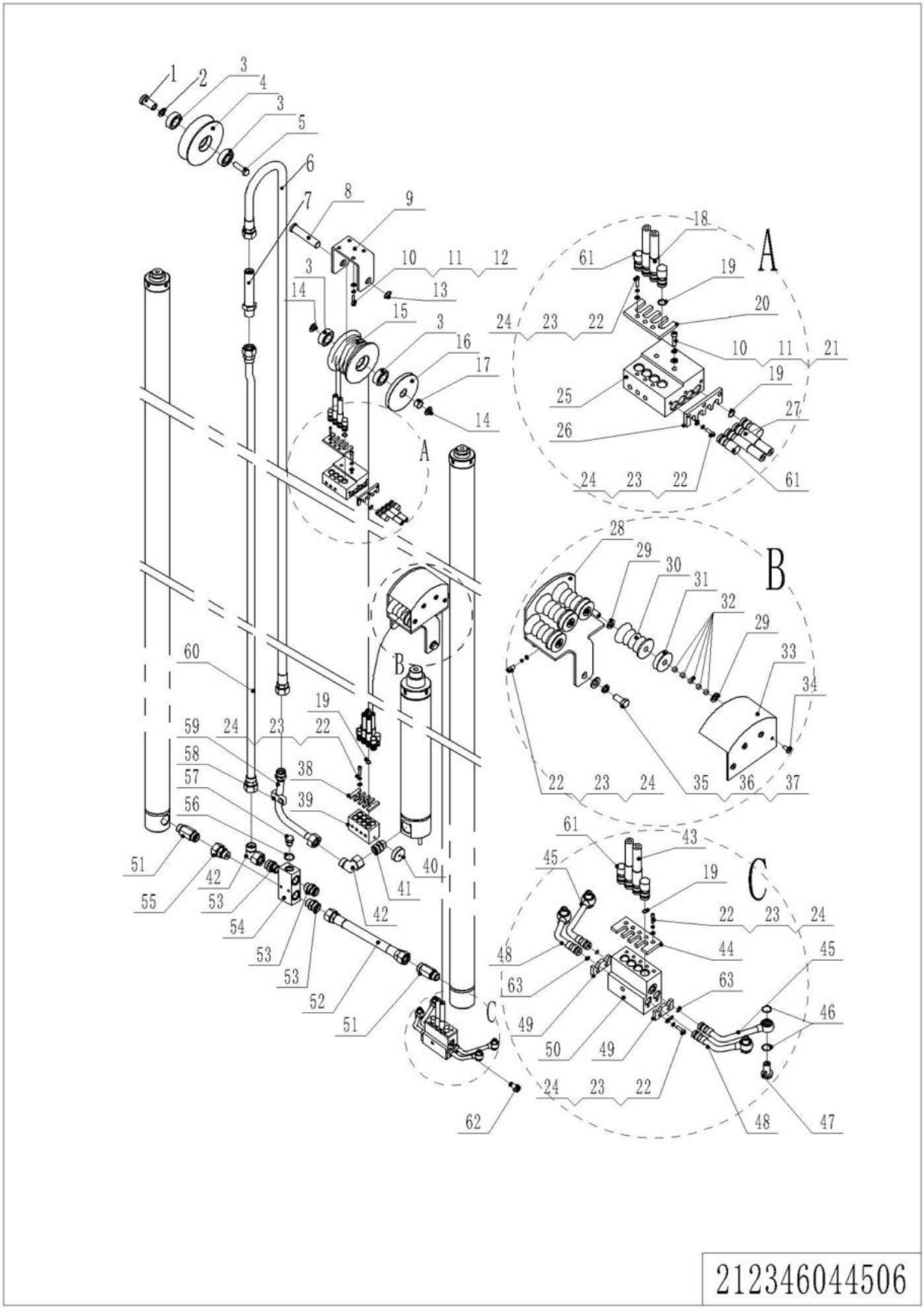

1= Supply as package. 2= Supply with constraints. 3= Phasing-out supply. 4= Supply as assembly. 5= Check other tables.

06 Mast Hydraulic Circuit 3 (212346044506)

No.	Item Code	Mark	Item Description	Qty.	Substitute	Note
1	212144520051		Pin	1		
2	212144520052		Washer	1		
3	910700200019		Bearing	4		
4	212144520050		Pulley	1		
5	910100300057		Bolt	1		
6	212144520130		Hose	1		4500
6	212144520131		Hose	1		5000
6	212144520132		Hose	1		5500
6	212144520133		Hose	1		6000
6	212144520134		Hose	1		6500
6	212144520135		Hose	1		7000
6	212144520136		Hose	1		7500
6	212144520137		Hose	1		8000
6	212144520138		Hose	1		8500
6	212144520139		Hose	1		9000
6	212144520140		Hose	1		9500
7	950400500003		Joint	1		
8	212144520057		Pin	1		
9	212144520044		Mounting Base	1		
10	910400100006		Flat Washer	10		
11	910400500006		Spring Washer	15		
12	910200200058		Screw	13		
13	910401300011		Circlip	1		
14	212144520056		Washer	2		
15	212144520053		Pulley	1		
16	212144520054		Pulley	1		
17	940500100016		Bushing	1		
18	212144520100		Hose	4		4500
18	212144520101		Hose	4		5000
18	212144520102		Hose	4		5500

1= Supply as package. 2= Supply with constraints. 3= Phasing-out supply. 4= Supply as assembly. 5= Check other tables.

06 Mast Hydraulic Circuit 3 (212346044506) Continuation1

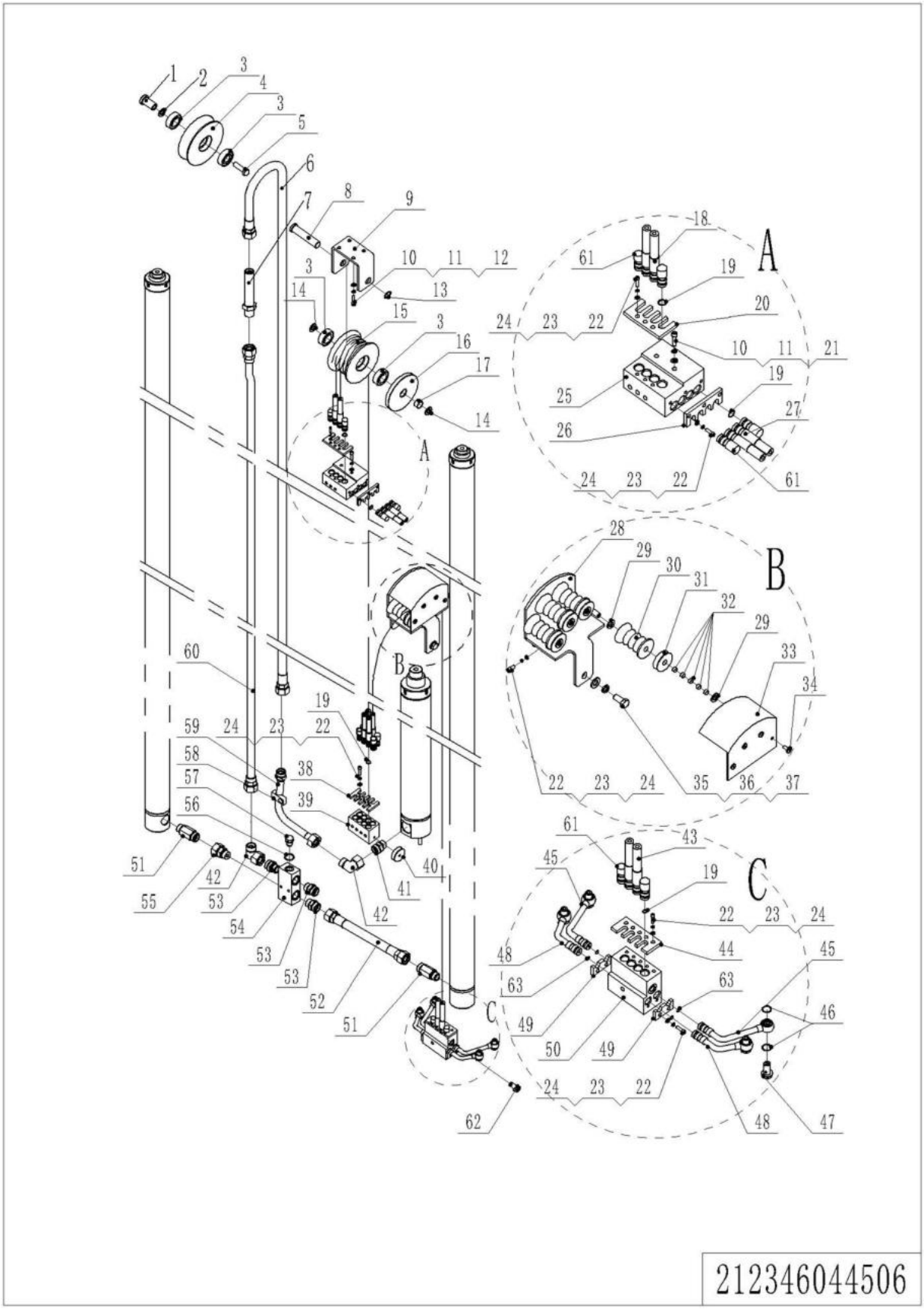

1= Supply as package. 2= Supply with constraints. 3= Phasing-out supply. 4= Supply as assembly. 5= Check other tables.

06 Mast Hydraulic Circuit 3 (212346044506) Continuation1

No.	Item Code	Mark	Item Description	Qty.	Substitute	Note
18	212144520103		Hose	4		6000
18	212144520104		Hose	4		6500
18	212144520105		Hose	4		7000
18	212144520106		Hose	4		7500
18	212144520107		Hose	4		8000
18	212144520108		Hose	4		8500
18	212144520109		Hose	4		9000
18	212144520110		Hose	4		9500
19	910800100124		O-Ring	26		
20	212144520045		Plate	1		
21	910200200062		Screw	2		
22	910200200035		Screw	16		
23	910400500005		Spring Washer	16		
24	910400100005		Flat Washer	16		
25	212144520047		Valve Block	1		
26	212144520046		Plate	1		
27	212125020015		Hose	4		4500
27	212125020026		Hose	4		5000
27	212125020027		Hose	4		5500
27	212125020018		Hose	4		6000
27	212125020019		Hose	4		6500
27	212125020020		Hose	4		7000
27	212125020021		Hose	4		7500
27	212125020022		Hose	4		8000
27	212125020023		Hose	4		8500
27	212125020024		Hose	4		9000
27	212125020025		Hose	4		9500
28	212144510047		Wheel Casing	1		
29	910400100007		Flat Washer	8		
30	212144520058		Pulley	4		

1= Supply as package. 2= Supply with constraints. 3= Phasing-out supply. 4= Supply as assembly. 5= Check other tables.

06 Mast Hydraulic Circuit 3 (212346044506) Continuation 2

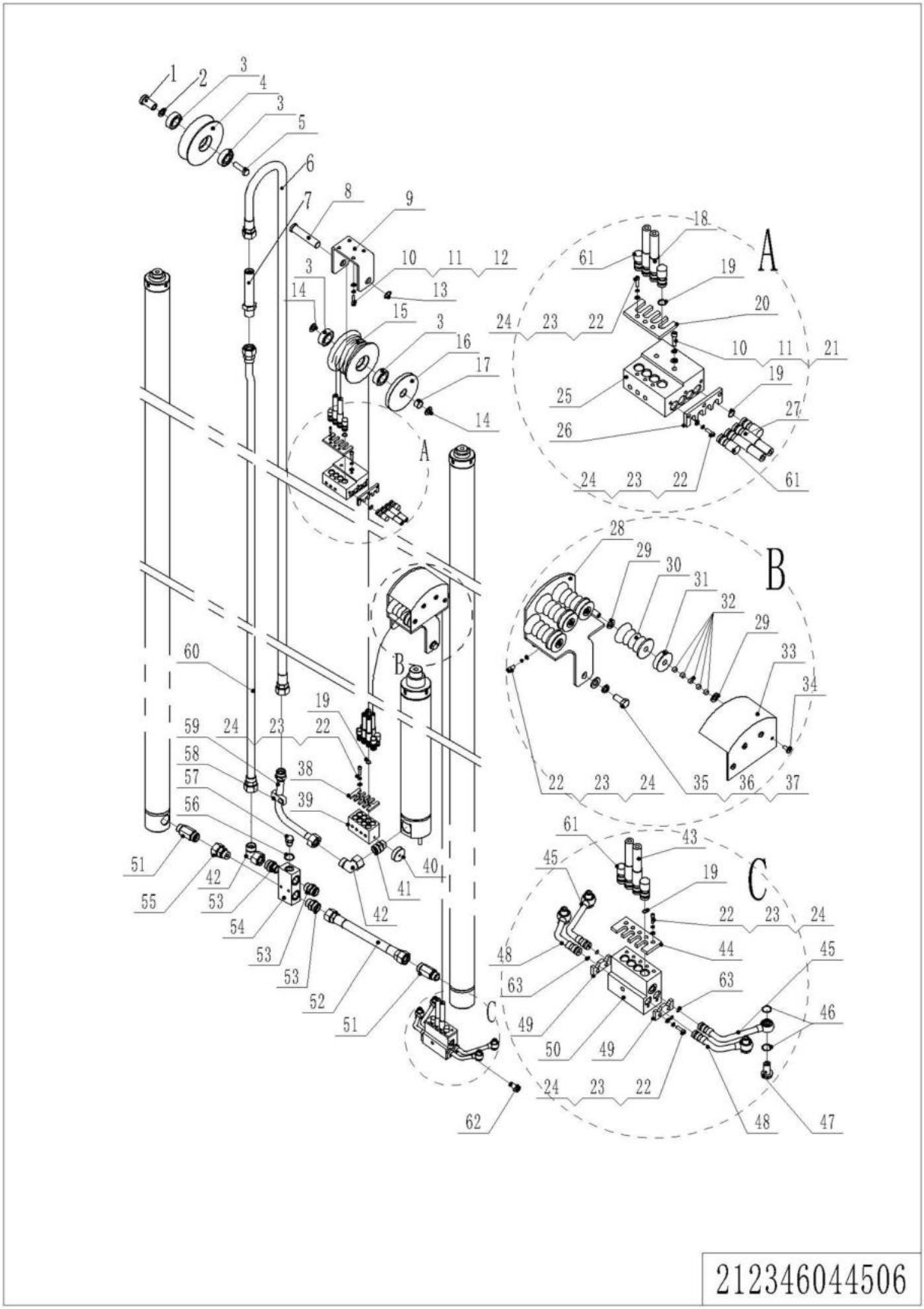

06 Mast Hydraulic Circuit 3 (212346044506) Continuation 2

No.	Item Code	Mark	Item Description	Qty.	Substitute	Note
31	212144520059		Pulley	4		
32	940500100079		Bushing	20		
33	212144510046		Wheel Casing	1		
34	910200500052		Screw	4		
35	910100300048		Bolt	2		
36	910400500008		Spring Washer	3		
37	910400100008		Flat Washer	2		
38	212144520040		Plate	1		
39	212144520039		Valve Block	1		
40	212144520037		Pulley	1		
41	212198520036		Anti-explosion Valve	1		
42	950400200006		Joint	2		
43	212144520085		Hose	4		4500
43	212144520086		Hose	4		5000
43	212144520087		Hose	4		5500
43	212144520088		Hose	4		6000
43	212144520089		Hose	4		6500
43	212144520090		Hose	4		7000
43	212144520091		Hose	4		7500
43	212144520092		Hose	4		8000
43	212144520093		Hose	4		8500
43	212144520094		Hose	4		9000
43	212144520095		Hose	4		9500
44	212144520032		Plate	1		
45	212144520033		Steel Tube	2		
46	910800100125		O-Ring	4		
47	212144520042		Bolt	4		
48	212144520034		Steel Tube	2		
49	212144520031		Plate	2		
50	212144520030		Valve Block	1		

1= Supply as package. 2= Supply with constraints. 3= Phasing-out supply. 4= Supply as assembly. 5= Check other tables.

06 Mast Hydraulic Circuit 3 (212346044506) Continuation 3

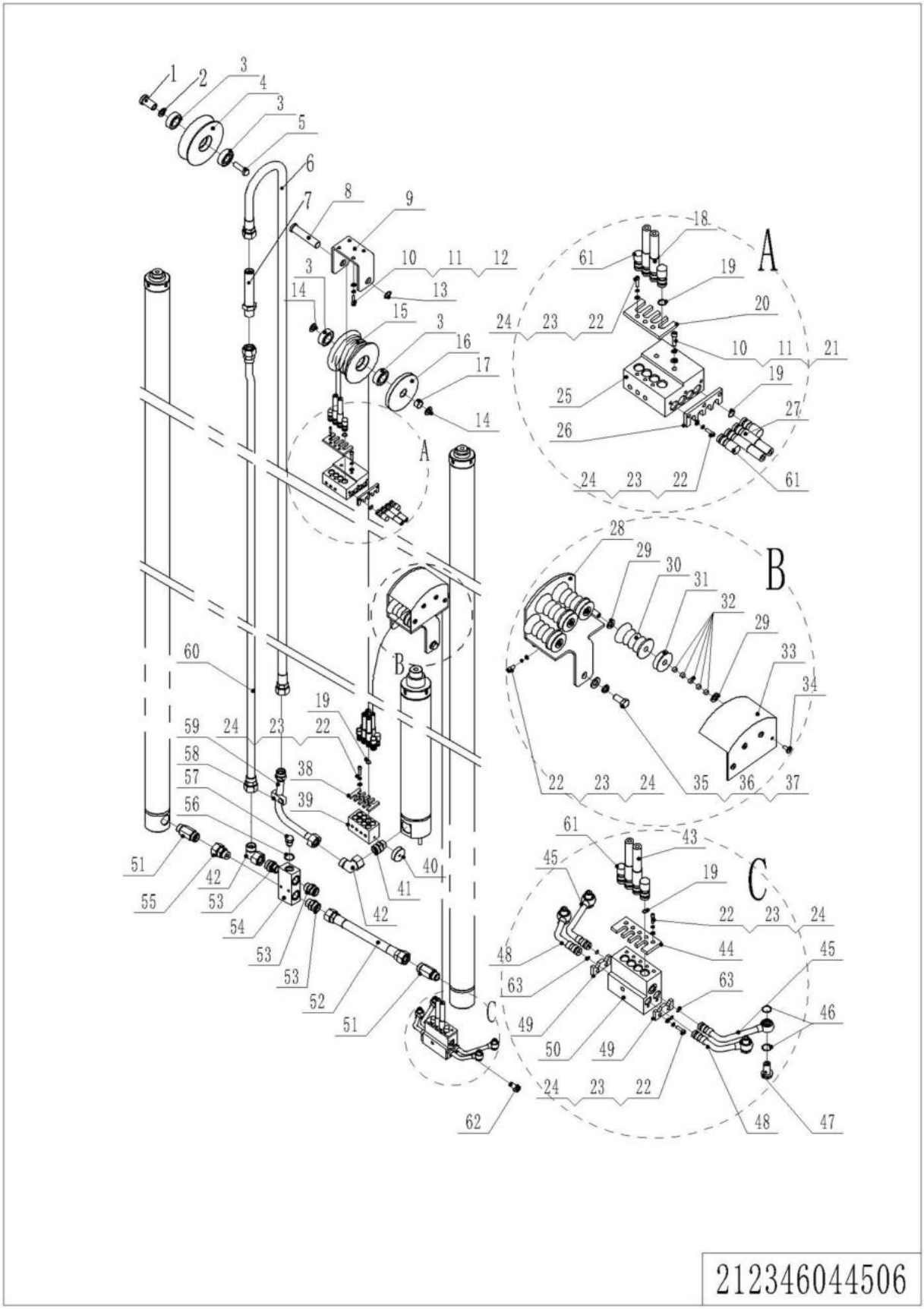

1= Supply as package. 2= Supply with constraints. 3= Phasing-out supply. 4= Supply as assembly. 5= Check other tables.

06 Mast Hydraulic Circuit 3 (212346044506) Continuation 3

No.	Item Code	Mark	Item Description	Qty.	Substitute	Note
51	212198520022		Anti-explosion Valve	2		
52	212144520036		Hose	1		
53	950400400011		Joint	3		
54	212144520041		Valve Block	1		
55	950400100003		Joint	1		
56	910800900005		Bonded Washer	1		
57	911300100001		Screw Plug	1		
58	213044520110		Pipe Clip	1		
59	212144520048		Steel Tube	1		
60	212144520115		Steel Tube	1		4500
60	212144520116		Steel Tube	1		5000
60	212144520117		Steel Tube	1		5500
60	212144520118		Steel Tube	1		6000
60	212144520119		Steel Tube	1		6500
60	212144520120		Steel Tube	1		7000
60	212144520121		Steel Tube	1		7500
60	212144520122		Steel Tube	1		8000
60	212144520123		Steel Tube	1		8500
60	212144520124		Steel Tube	1		9000
60	212144520125		Steel Tube	1		9500
61	212344520000		Plug	10		
62	951100300002		Plug	2		M12x1.5
63	910800100061		O-Ring	4		

1= Supply as package. 2= Supply with constraints. 3= Phasing-out supply. 4= Supply as assembly. 5= Check other tables.

07 Mast Hydraulic Circuit 4 (212346044507)

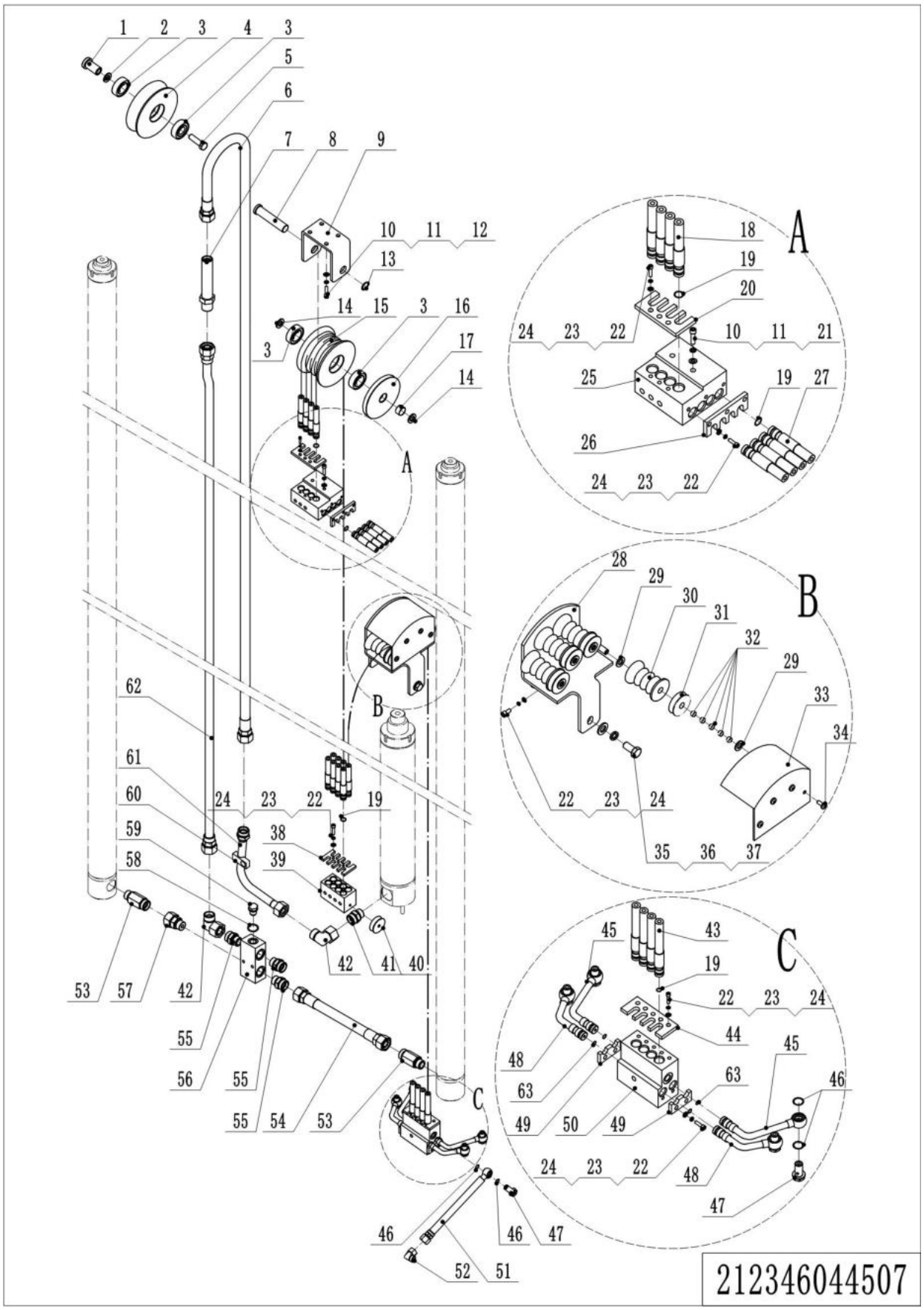

1= Supply as package. 2= Supply with constraints. 3= Phasing-out supply. 4= Supply as assembly. 5= Check other tables.

07 Mast Hydraulic Circuit 4 (212346044507)

No.	Item Code	Mark	Item Description	Qty.	Substitute	Note
1	212144520051		Pin	1		
2	212144520052		Washer	1		
3	910700200019		Bearing	4		
4	212144520050		Pulley	1		
5	910100300057		Bolt	1		
6	212144520130		Hose	1		4500
6	212144520131		Hose	1		5000
6	212144520132		Hose	1		5500
6	212144520133		Hose	1		6000
6	212144520134		Hose	1		6500
6	212144520135		Hose	1		7000
6	212144520136		Hose	1		7500
6	212144520137		Hose	1		8000
6	212144520138		Hose	1		8500
6	212144520139		Hose	1		9000
6	212144520140		Hose	1		9500
7	950400500003		Joint	1		
8	212144520057		Pin	1		
9	212144520044		Mounting Base	1		
10	910400100006		Flat Washer	10		
11	910400500006		Spring Washer	15		
12	910200200058		Screw	13		
13	910401300011		Circlip	1		
14	212144520056		Washer	2		
15	212144520053		Pulley	1		
16	212144520054		Pulley	1		
17	940500100016		Bushing	1		
18	212144520100		Hose	4		4500
18	212144520101		Hose	4		5000
18	212144520102		Hose	4		5500

1= Supply as package. 2= Supply with constraints. 3= Phasing-out supply. 4= Supply as assembly. 5= Check other tables.

07 Mast Hydraulic Circuit 4 (212346044507) Continuation1

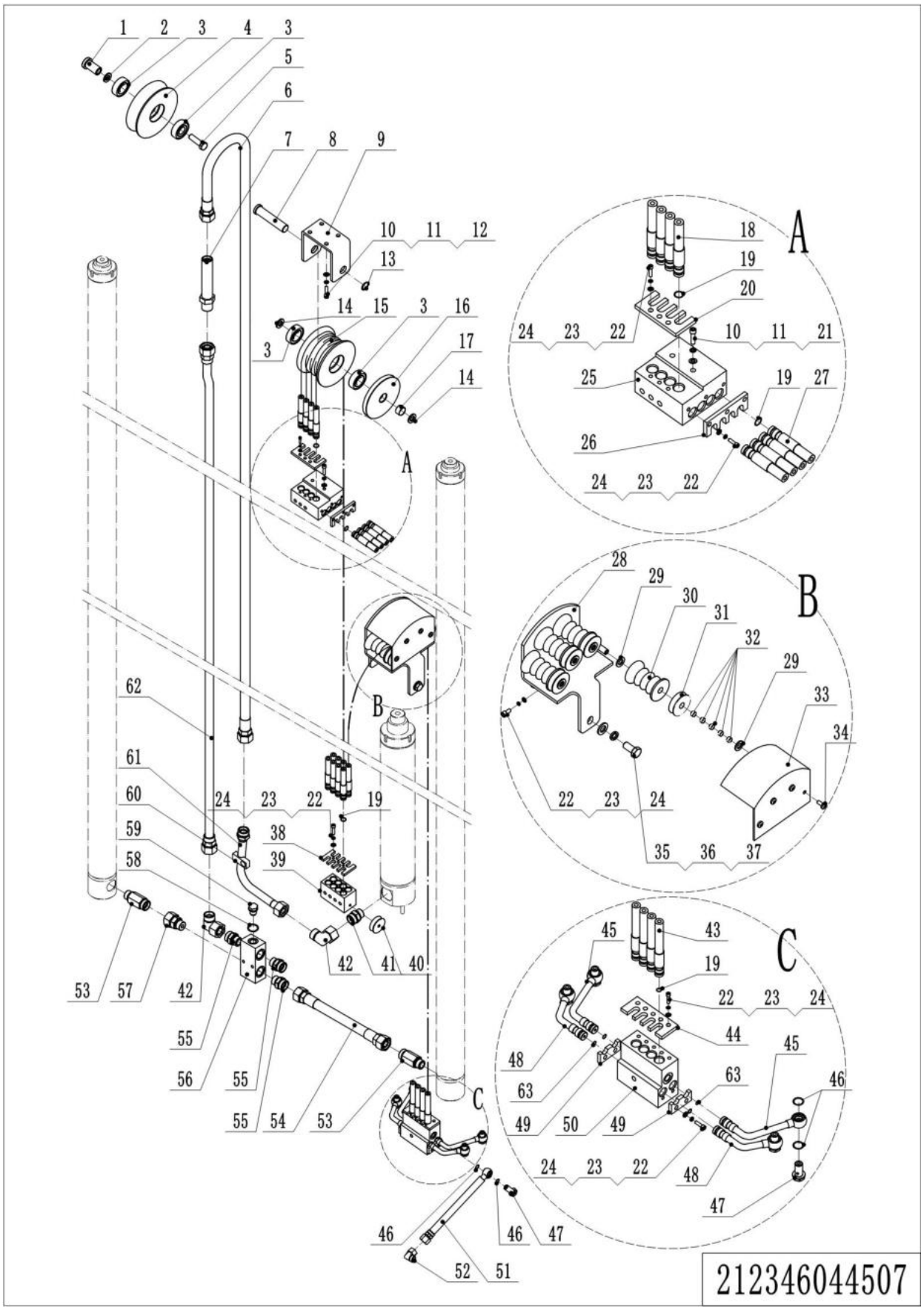

1= Supply as package. 2= Supply with constraints. 3= Phasing-out supply. 4= Supply as assembly. 5= Check other tables.

07 Mast Hydraulic Circuit 4 (212346044507) Continuation1

No.	Item Code	Mark	Item Description	Qty.	Substitute	Note
18	212144520103		Hose	4		6000
18	212144520104		Hose	4		6500
18	212144520105		Hose	4		7000
18	212144520106		Hose	4		7500
18	212144520107		Hose	4		8000
18	212144520108		Hose	4		8500
18	212144520109		Hose	4		9000
18	212144520110		Hose	4		9500
19	910800100124		O-Ring	26		
20	212144520045		Plate	1		
21	910200200062		Screw	2		
22	910200200035		Screw	16		
23	910400500005		Spring Washer	16		
24	910400100005		Flat Washer	16		
25	212144520047		Valve Block	1		
26	212144520046		Plate	1		
27	212125020015		Hose	4		4500
27	212125020026		Hose	4		5000
27	212125020027		Hose	4		5500
27	212125020018		Hose	4		6000
27	212125020019		Hose	4		6500
27	212125020020		Hose	4		7000
27	212125020021		Hose	4		7500
27	212125020022		Hose	4		8000
27	212125020023		Hose	4		8500
27	212125020024		Hose	4		9000
27	212125020025		Hose	4		9500
28	212144510047		Wheel Casing	1		
29	910400100007		Flat Washer	8		
30	212144520058		Pulley	4		

1= Supply as package. 2= Supply with constraints. 3= Phasing-out supply. 4= Supply as assembly. 5= Check other tables.

07 Mast Hydraulic Circuit 4 (212346044507) Continuation 2

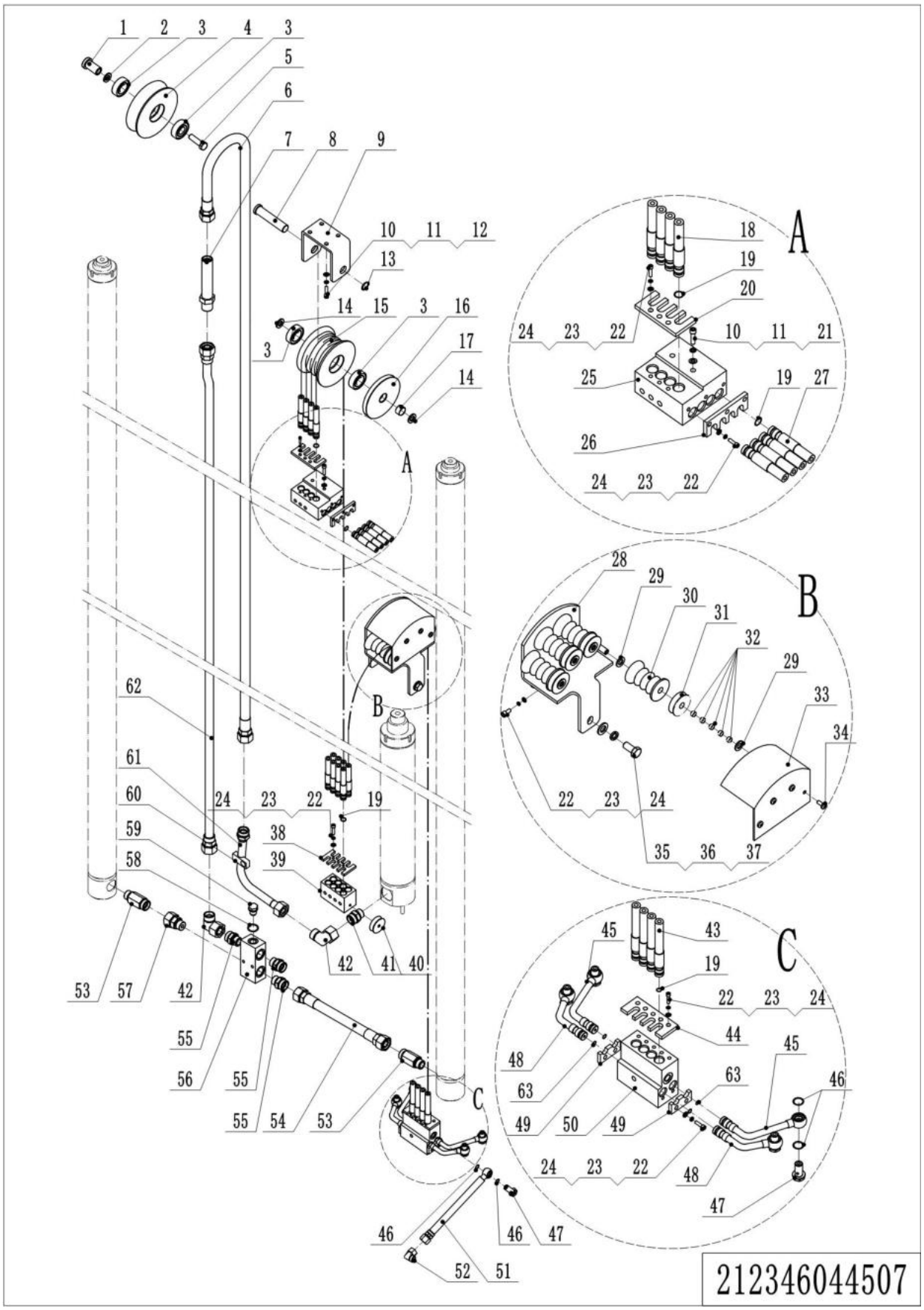

1= Supply as package. 2= Supply with constraints. 3= Phasing-out supply. 4= Supply as assembly. 5= Check other tables.

07 Mast Hydraulic Circuit 4 (212346044507) Continuation 2

No.	Item Code	Mark	Item Description	Qty.	Substitute	Note
31	212144520059		Pulley	4		
32	940500100079		Bushing	20		
33	212144510046		Wheel Casing	1		
34	910200500052		Screw	4		
35	910100300048		Bolt	2		
36	910400500008		Spring Washer	3		
37	910400100008		Flat Washer	2		
38	212144520040		Plate	1		
39	212144520039		Valve Block	1		
40	212144520037		Pulley	1		
41	212198520036		Anti-explosion Valve	1		
42	950400200006		Joint	2		
43	212144520085		Hose	4		4500
43	212144520086		Hose	4		5000
43	212144520087		Hose	4		5500
43	212144520088		Hose	4		6000
43	212144520089		Hose	4		6500
43	212144520090		Hose	4		7000
43	212144520091		Hose	4		7500
43	212144520092		Hose	4		8000
43	212144520093		Hose	4		8500
43	212144520094		Hose	4		9000
43	212144520095		Hose	4		9500
44	212144520032		Plate	1		
45	212144520033		Steel Tube	2		
46	910800100125		O-Ring	4		
47	212144520042		Bolt	4		
48	212144520034		Steel Tube	2		
49	212144520031		Plate	2		
50	212144520030		Valve Block	1		

1= Supply as package. 2= Supply with constraints. 3= Phasing-out supply. 4= Supply as assembly. 5= Check other tables.

07 Mast Hydraulic Circuit 4 (212346044507) Continuation 3

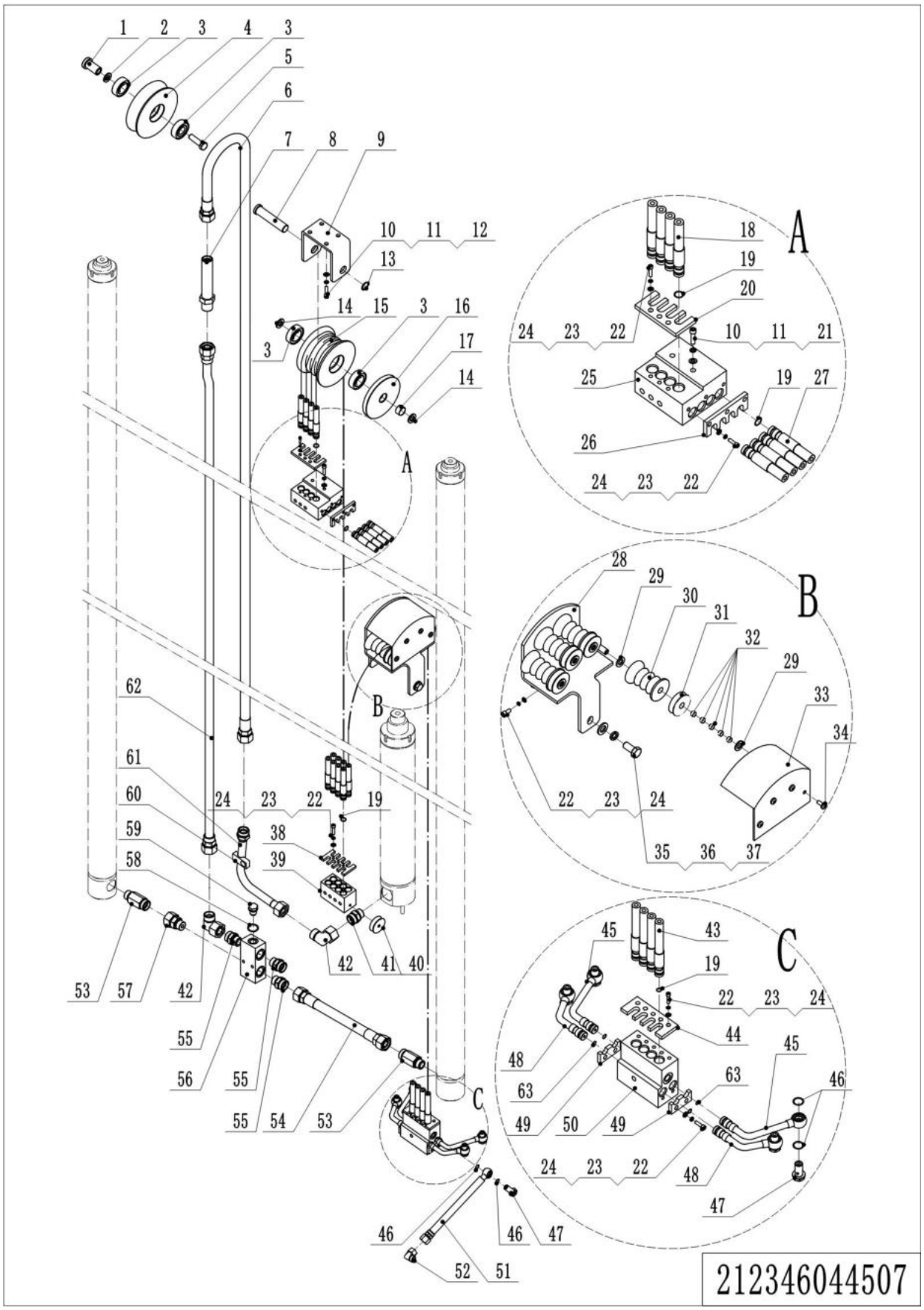

1= Supply as package. 2= Supply with constraints. 3= Phasing-out supply. 4= Supply as assembly. 5= Check other tables.

07 Mast Hydraulic Circuit 4 (212346044507) Continuation 3

No.	Item Code	Mark	Item Description	Qty.	Substitute	Note
51	212144520035		Hose	2		
52	950400200001		Joint	2		
53	212198520022		Anti-explosion Valve	2		
54	212144520036		Hose	1		
55	950400400011		Joint	3		
56	212144520041		Valve Block	1		
57	950400100003		Joint	1		
58	910800900005		Bonded Washer	1		
59	911300100001		Screw Plug	1		
60	213044520110		Pipe Clip	1		
61	212144520048		Steel Tube	1		
62	212144520115		Steel Tube	1		4500
62	212144520116		Steel Tube	1		5000
62	212144520117		Steel Tube	1		5500
62	212144520118		Steel Tube	1		6000
62	212144520119		Steel Tube	1		6500
62	212144520120		Steel Tube	1		7000
62	212144520121		Steel Tube	1		7500
62	212144520122		Steel Tube	1		8000
62	212144520123		Steel Tube	1		8500
62	212144520124		Steel Tube	1		9000
62	212144520125		Steel Tube	1		9500
63	910800100061		O-Ring	4		

1= Supply as package. 2= Supply with constraints. 3= Phasing-out supply. 4= Supply as assembly. 5= Check other tables.

Chapter 5: Steering System, Braking System, Wheels

01 Steering Wheel (213346031501)

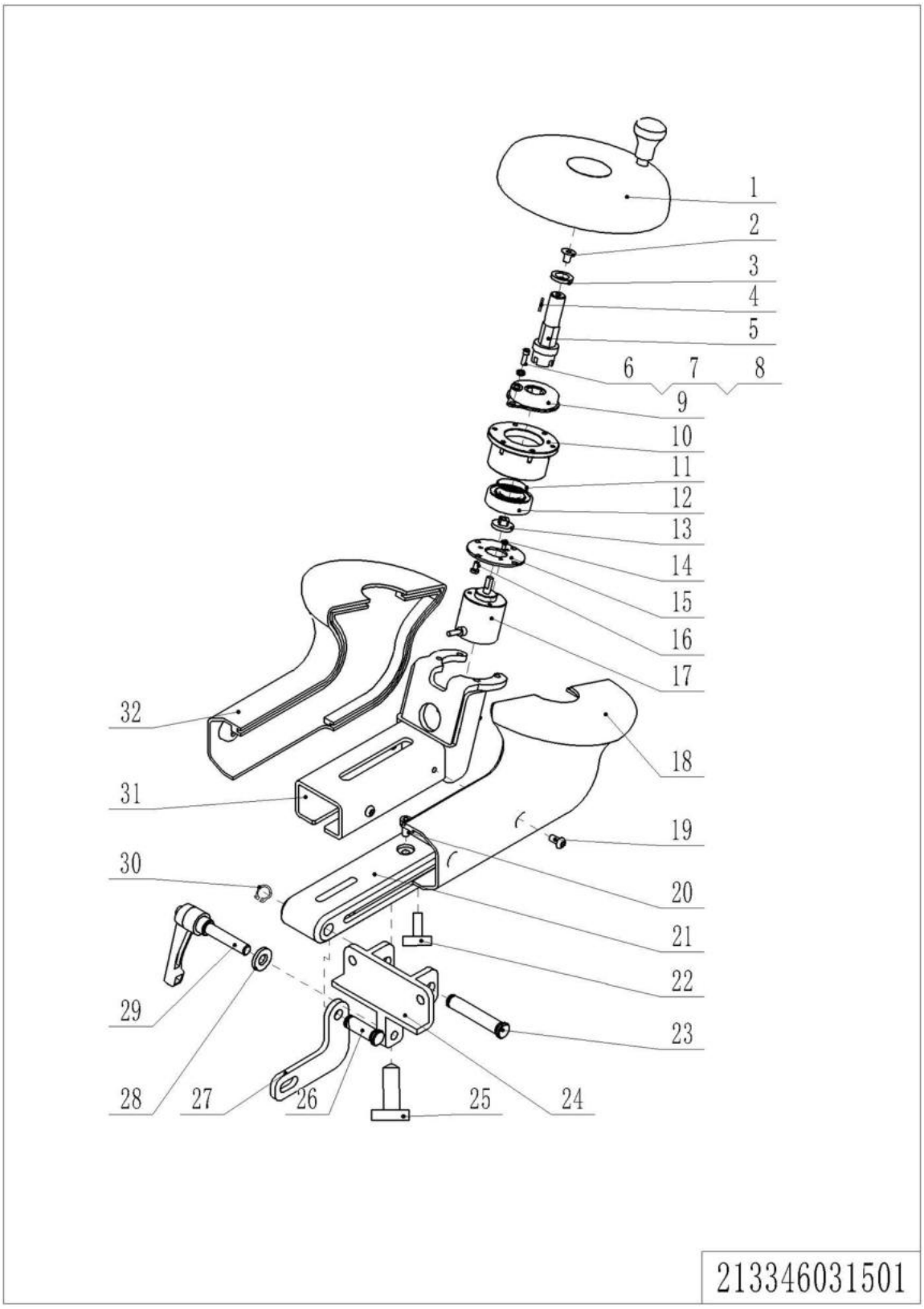

01 Steering Wheel (213346031501)

No.	Item Code	Mark	Item Description	Qty.	Substitute	Note
1	940801700001		Handwheel	1		
2	910200400015		Screw	1		
3	212131520006		Washer	1		
4	910600800004		Flat Key	1		
5	212131520005		Axle	1		
6	910200500038		Screw	5		
7	910400100004		Flat Washer	5		
8	910400500004		Spring Washer	5		
9	271531511021		Rotary Damper	1		
10	212131520007		Bracket	1		
11	910401400012		Circlip	1		
12	910700200004		Bearing	1		
13	505931520002		Link Block	1		
14	910200500009		Screw	3		
15	212131520008		Fixing Plate	1		
16	910200500021		Screw	4		
17	212131510002		Potentiometer	1		
18	212131520001		Protective Cover	1		
19	910200300017		Screw	4		
20	910200200033		Screw	1		
21	212131520004		Sliding Block	1		
22	212131520015		Handwheel	1		
23	440517020002		Pin	1		
24	212131510000		Fixing Base	1		
25	212131520015		Handwheel	1		
26	213031540015		Pin	1		
27	212131520003		Fixing Plate	1		
28	212131520002		Washer	1		
29	272031510001		Handle	1		
30	910401300003		Circlip	1		

1= Supply as package. 2= Supply with constraints. 3= Phasing-out supply. 4= Supply as assembly. 5= Check other tables.

01 Steering Wheel (213346031501) Continuation

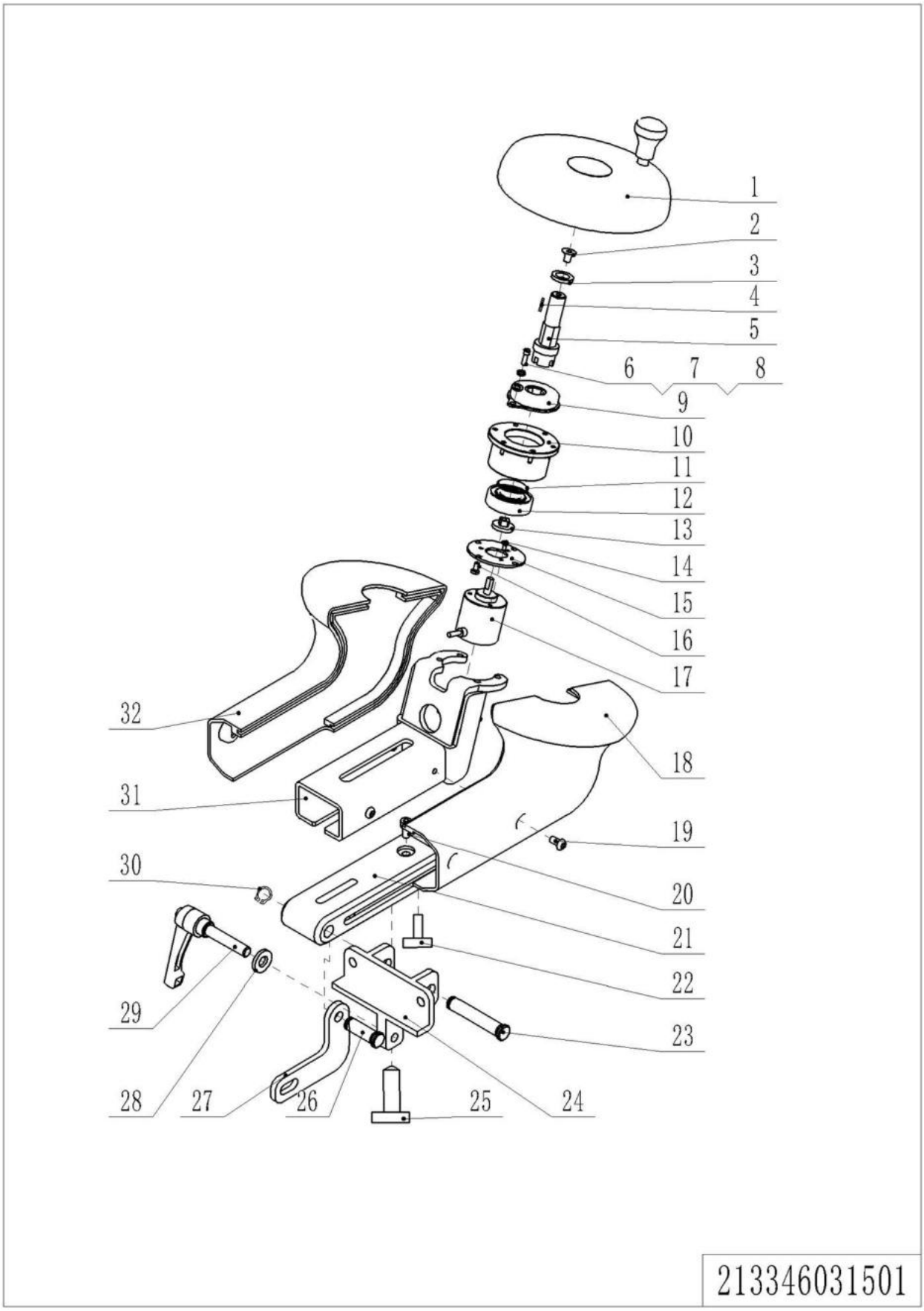

1= Supply as package. 2= Supply with constraints. 3= Phasing-out supply. 4= Supply as assembly. 5= Check other tables.

01 Steering Wheel (213346031501) Continuation

No.	Item Code	Mark	Item Description	Qty.	Substitute	Note
31	212131510001		Fixing Base	1		
32	212131520000		Protective Cover	1		

02 Brake Pedal (213346011501)

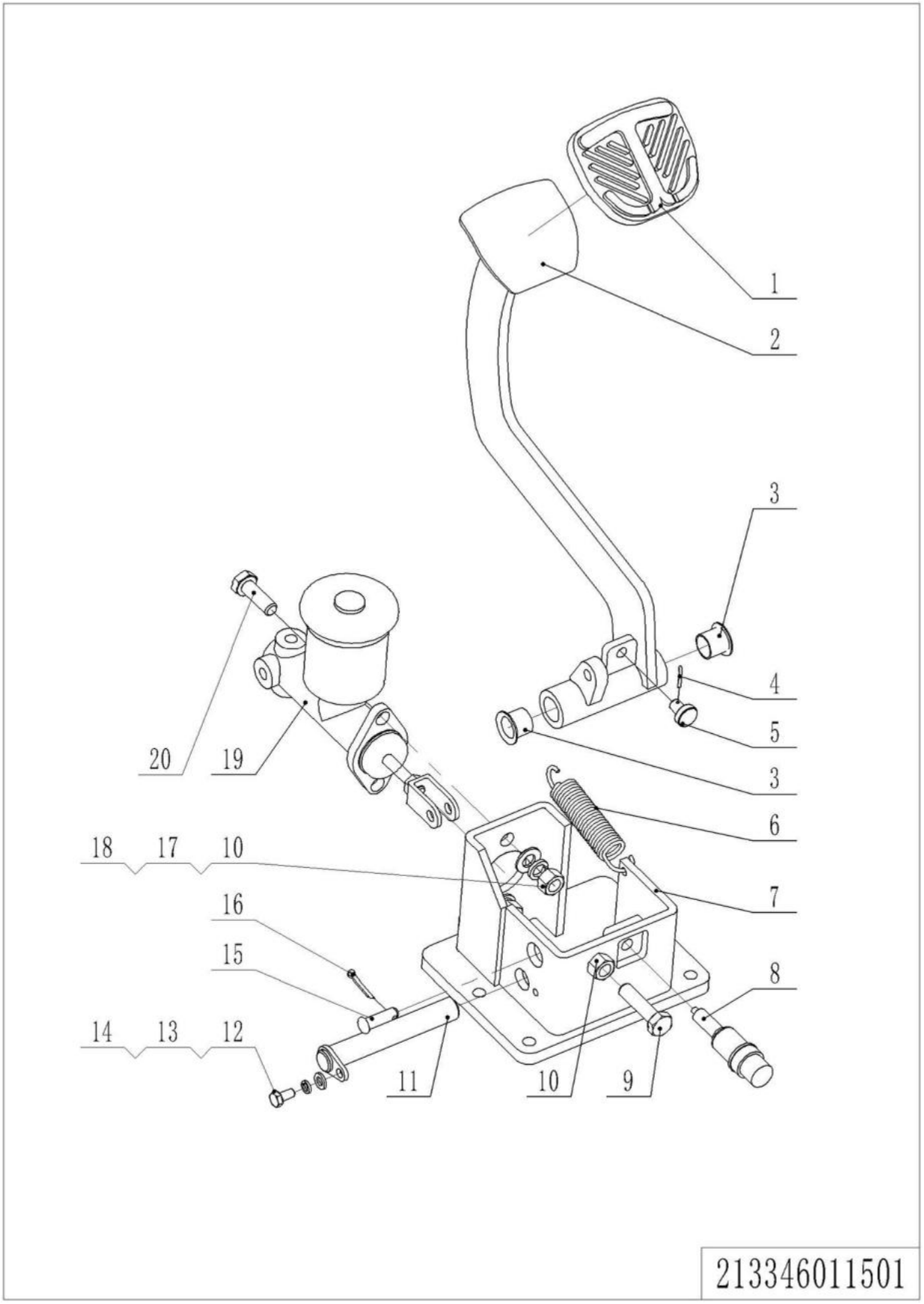

1= Supply as package. 2= Supply with constraints. 3= Phasing-out supply. 4= Supply as assembly. 5= Check other tables.

02 Brake Pedal (213346011501)

No.	Item Code	Mark	Item Description	Qty.	Substitute	Note
1	253511520010		Rubber Mat	1		
2	212111510003		Platform	1		
3	940500200016		Bushing	2		
4	910600600011		Cotter Pin	1		
5	251011520015		Crash Pad	1		
6	275211521013		Spring	1		
7	212111510001		Bracket	1		
8	920201000002		Switch	1		
9	910100300039		Bolt	1		
10	910300100007		Nut	3		
11	212111510002		Pin	1		
12	910400100005		Flat Washer	1		
13	910400500005		Spring Washer	1		
14	910100300009		Bolt	1		
15	910600700026		Pin	1		
16	910600600026		Cotter Pin	1		
17	910400100007		Flat Washer	2		
18	910400500007		Spring Washer	2		
19	212111510006		Brake Pump	1		
20	910100300037		Bolt	2		

03 Brake Unit (212346011501)

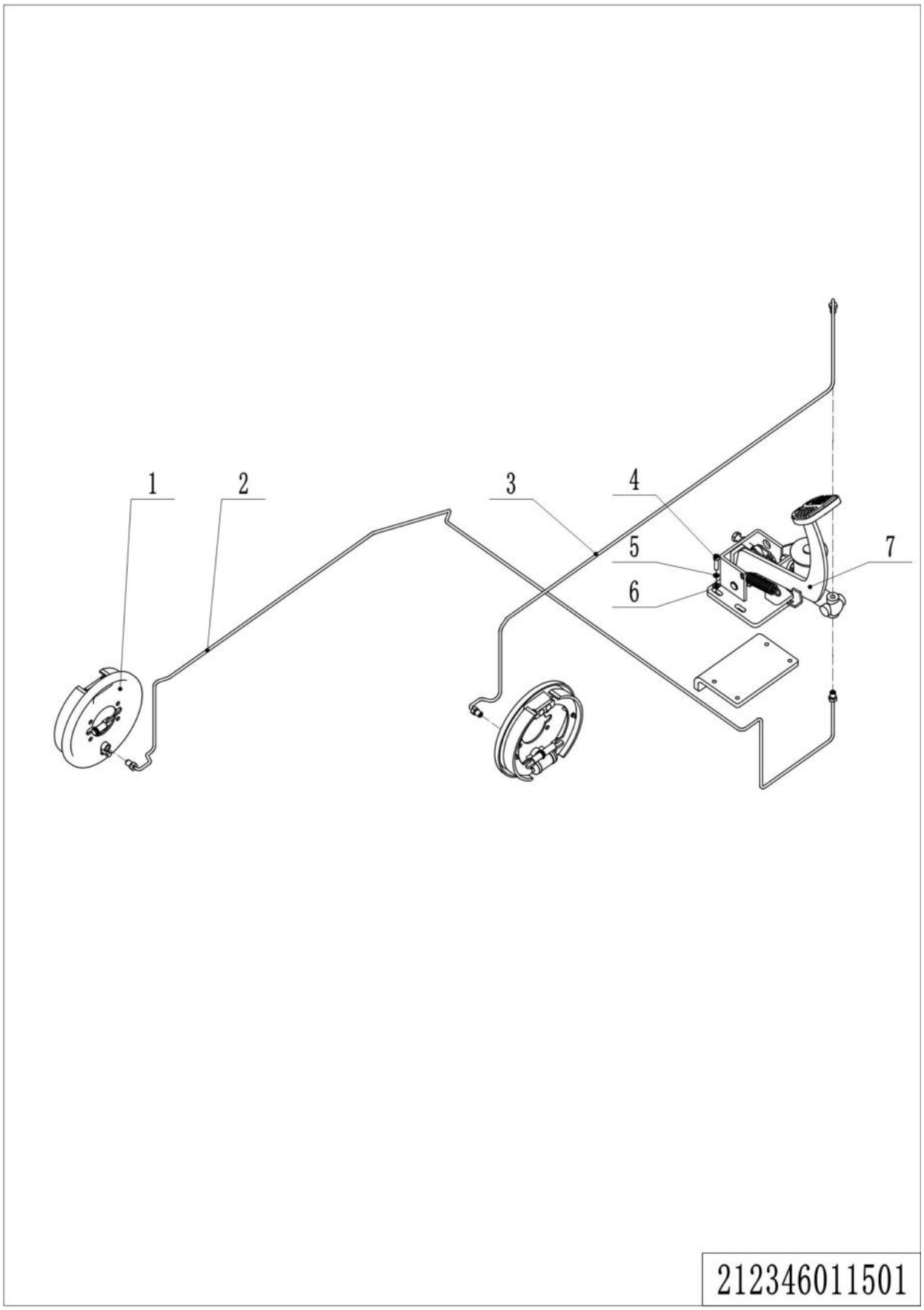

1= Supply as package. 2= Supply with constraints. 3= Phasing-out supply. 4= Supply as assembly. 5= Check other tables.

03 Brake Unit (212346011501)

No.	Item Code	Mark	Item Description	Qty.	Substitute	Note
1	940700200004		Brake	2		
2	212111510005		Steel Tube	1		
3	212111510004		Steel Tube	1		
4	920201000002		Switch	1		
5	910200200058		Screw	4		
6	910400500006		Spring Washer	4		
7	910400100006		Flat Washer	4		
8	212111510000		Foot Brake Assembly	1		

04 Load Wheel (212146017001)

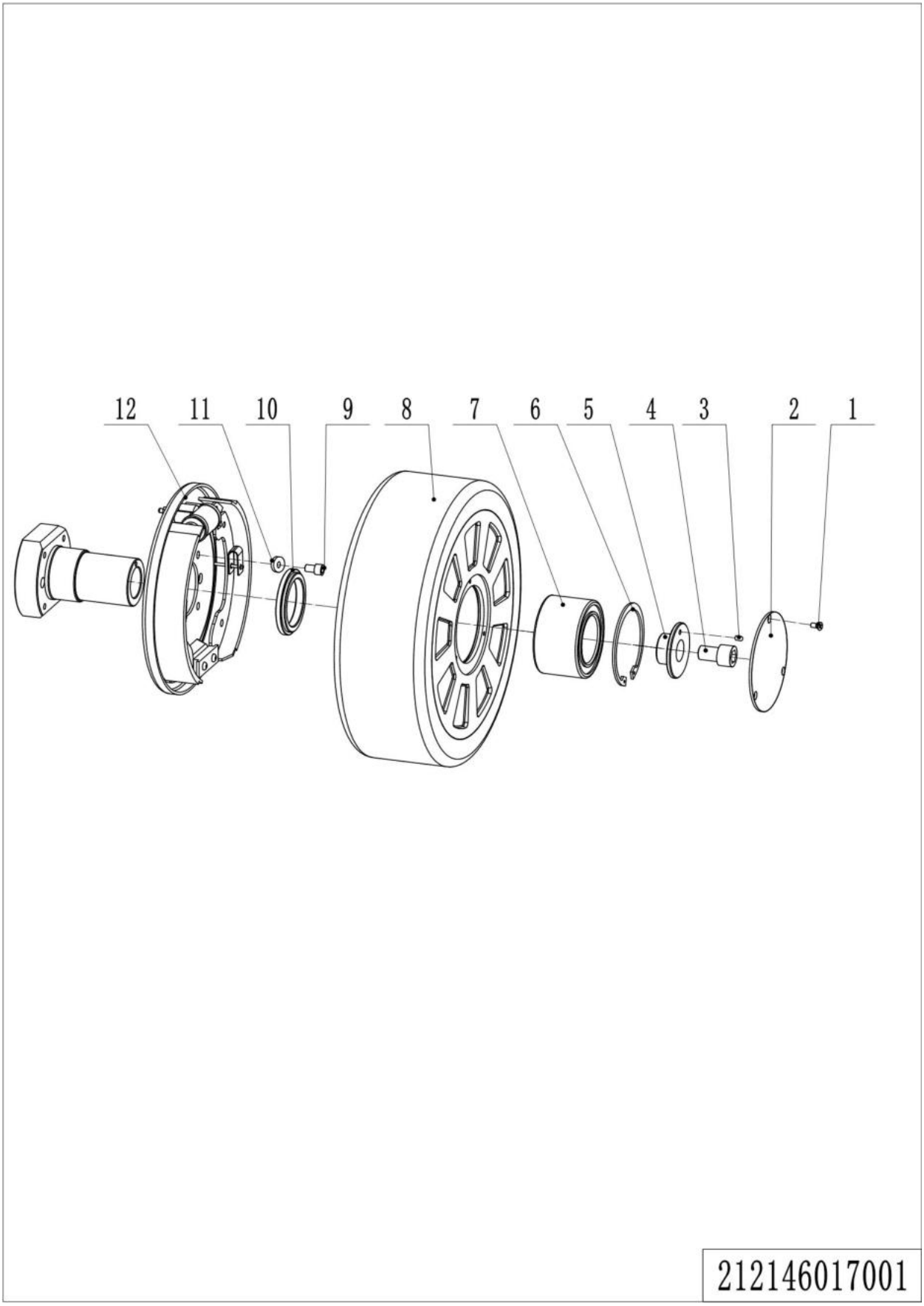

1= Supply as package. 2= Supply with constraints. 3= Phasing-out supply. 4= Supply as assembly. 5= Check other tables.

04 Load Wheel (212146017001)

No.	Item Code	Mark	Item Description	Qty.	Substitute	Note
1	910200600016		Screw	3		
2	212117020000		Close Plate	1		
3	910600100009		Cylindrical Pin	1		
4	910202500001		Screw	1		
5	212117020002		Press Cover	1		
6	910401400024		Circlip	1		
7	941101000005		Bearing	1		
8	940300300034		WheelΦ285x110	1		
9	910100300022		Bolt	4		
10	212117020001		Washer	1		
11	910400100006		Flat Washer	4		
12	940700200004		Brake	1		

Chapter 6: Electrical Parts

01 Wire Harness (212346033001)

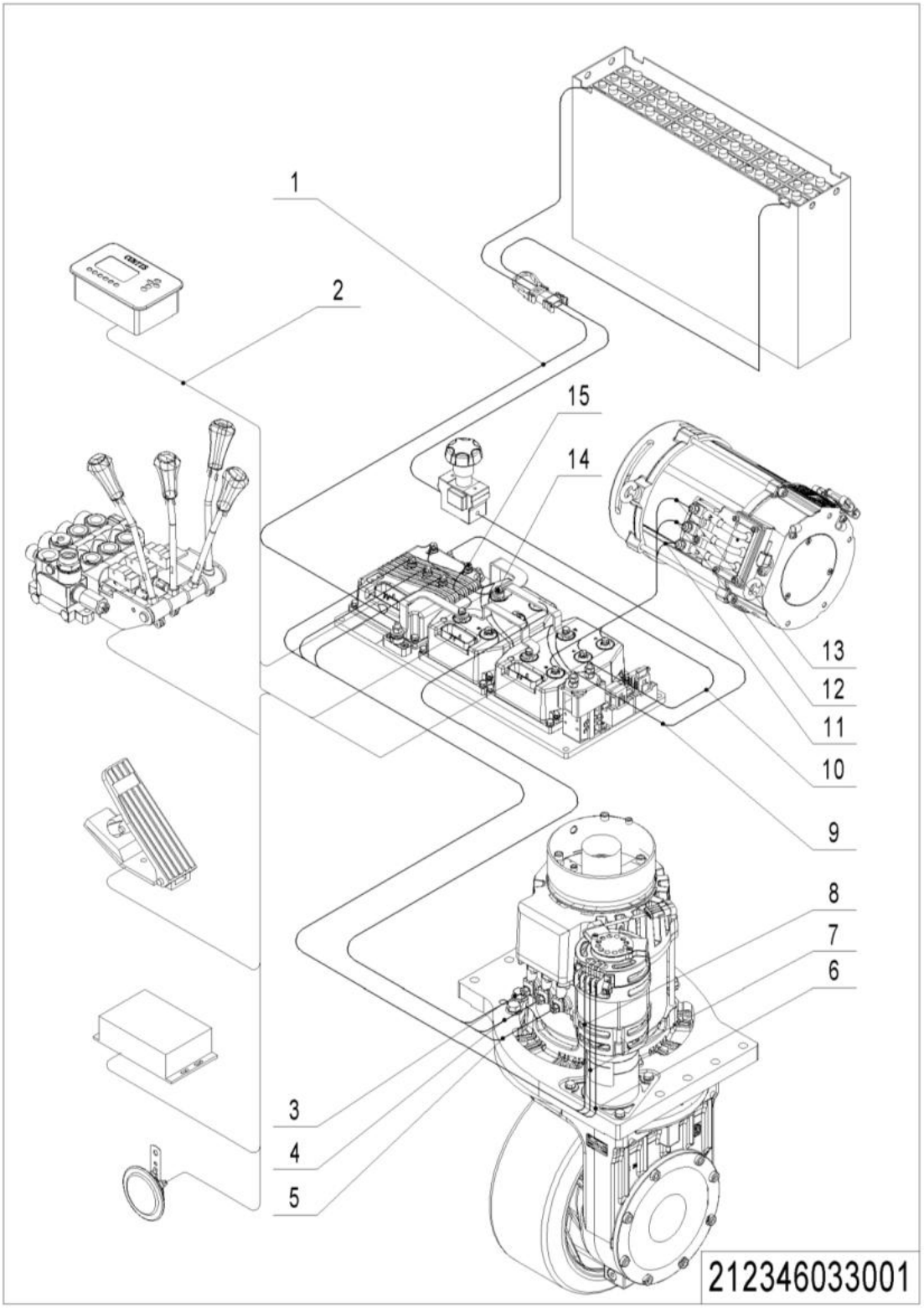

1= Supply as package. 2= Supply with constraints. 3= Phasing-out supply. 4= Supply as assembly. 5= Check other tables.

01 Wire Harness (212346033001)

No.	Item Code	Mark	Item Description	Qty.	Substitute	Note
1	212133010010		Wire Harness	1		Lead Acid
1	212133010031		Wire Harness	1		Lithium
2	212333010000		Wire Harness	1		1232SE(Lead Acid)
2	212333010003		Wire Harness	1		1232SE(Lithium)
2	213433010023		Wire Harness	1		F4A
2	213433010010		Wire Harness	1		INMOTION
3	212133010001		Cable	1		
4	212133010002		Cable	1		
5	212133010003		Cable	1		
6	212133010007		Cable	1		
7	212133010008		Cable	1		
8	212133010009		Cable	1		
9	212133010011		Cable	1		
10	212133010012		Cable	1		
11	212133010004		Cable	1		
12	212133010005		Cable	1		
13	212133010006		Cable	1		
14	213033010018		Cable	1		
15	213033010019		Cable	1		

02 Controller 1232SE (211046033002)

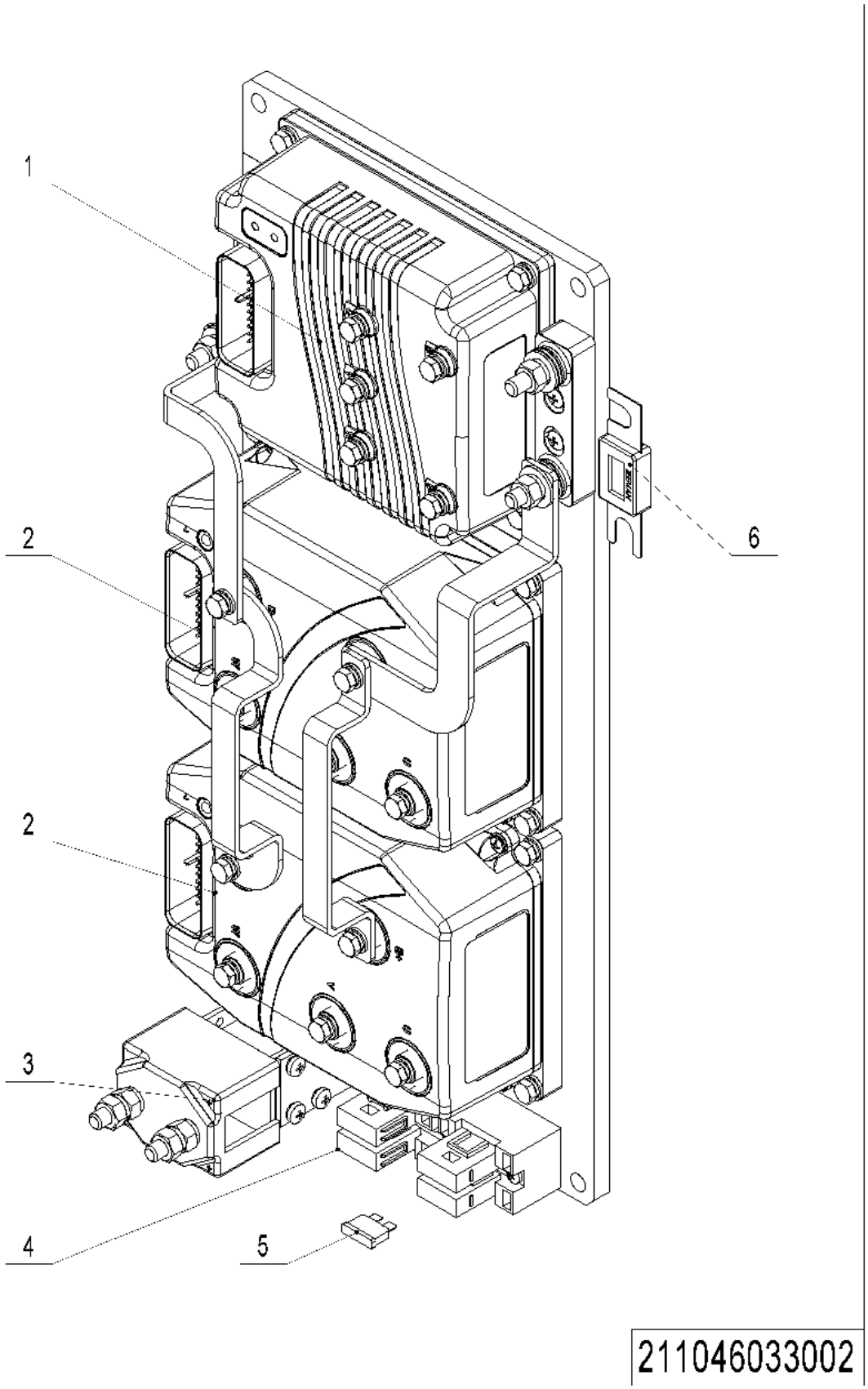

1= Supply as package. 2= Supply with constraints. 3= Phasing-out supply. 4= Supply as assembly. 5= Check other tables.

02 Controller 1232SE (211046033002)

No.	Item Code	Mark	Item Description	Qty.	Substitute	Note
1	921400100004		Controller	1		Steering Controller
2	921400100043		Controller	1		Drive Controller
2	921400100043		Controller	1		Oil Pump Controller
3	920700100008		Contactor	1		
4	920100400004		Fuse Holder	1		
5	920100200002		Fuse	1		
6	920100100014		Fuse	1		

03 Controller F4A(212346033010)

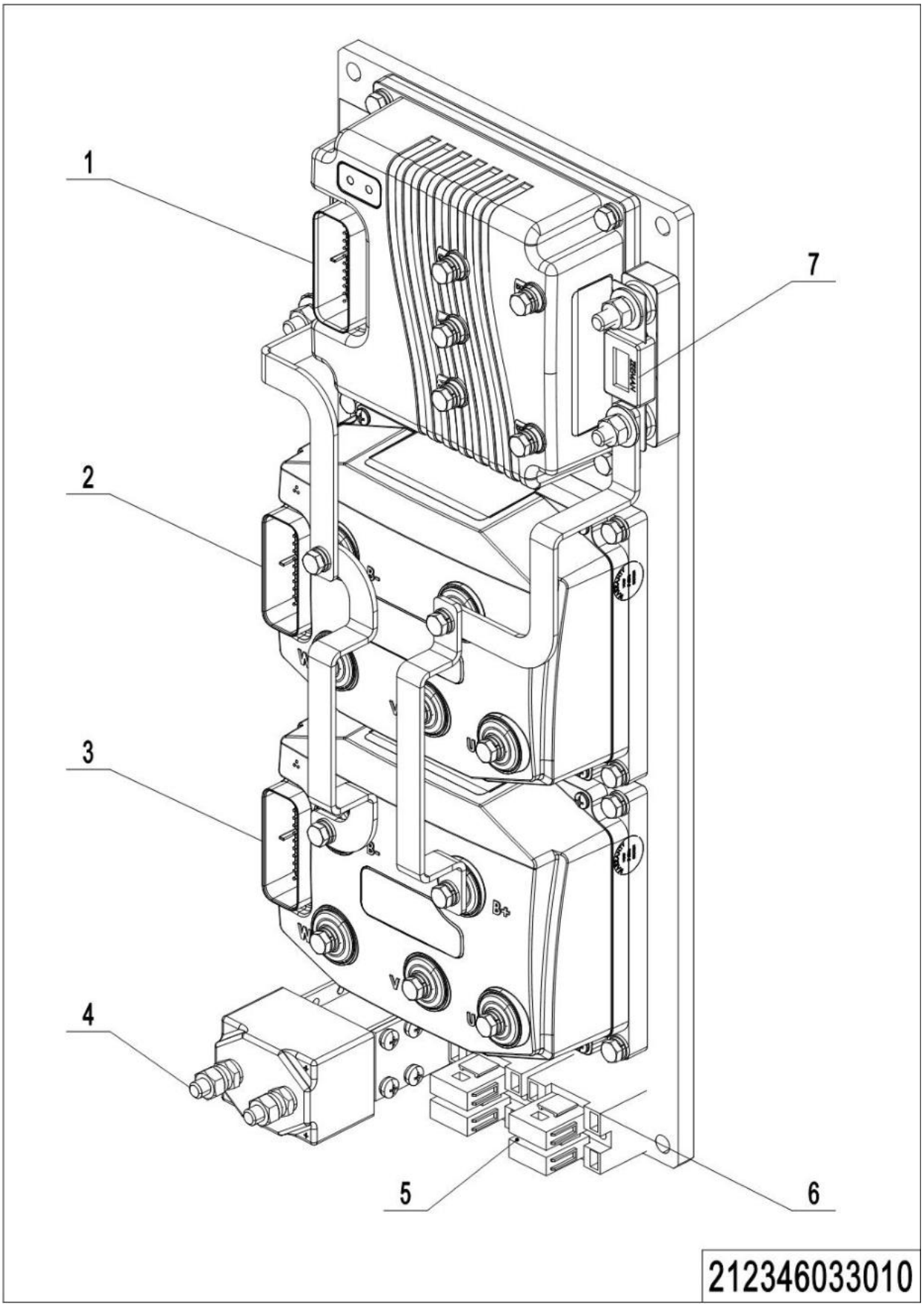

1= Supply as package. 2= Supply with constraints. 3= Phasing-out supply. 4= Supply as assembly. 5= Check other tables.

03 Controller F4A(212346033010)

No.	Item Code	Mark	Item Description	Qty.	Substitute	Note
1	921400100004		Controller	1		Steering Controller
2	921400100156		Controller	1		Drive Controller
3	921400100156		Controller	1		Oil Pump Controller
4	920700100008		Contactor	1		
5	920100200002		Fuse	4		
6	920100400004		Fuse Holder	2		
7	920100100014		Fuse	1		

04 Controller INMOTION(212346033011)

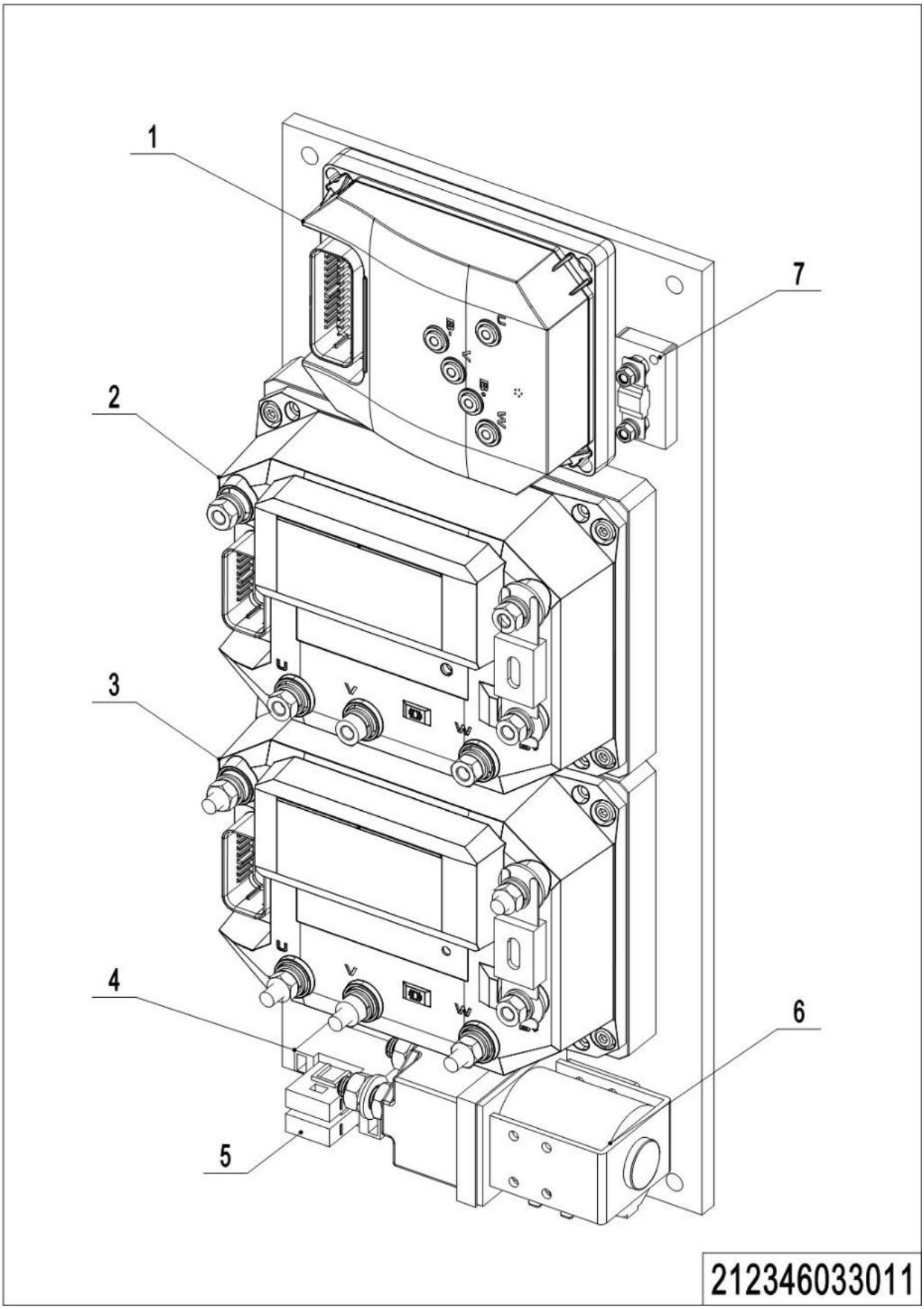

1= Supply as package. 2= Supply with constraints. 3= Phasing-out supply. 4= Supply as assembly. 5= Check other tables.

04 Controller INMOTION(212346033011)

No.	Item Code	Mark	Item Description	Qty.	Substitute	Note
1	921400100165		Controller	1		Steering Controller
2	921400100069		Controller	1		Drive Controller
3	921400100069		Controller	1		Oil Pump Controller
4	920100400004		Fuse Holder	1		
5	920100200002		Fuse	4		
6	920700100030		Contactor	2		
7	920100100026		Fuse	1		

05 Charger (212346036501)

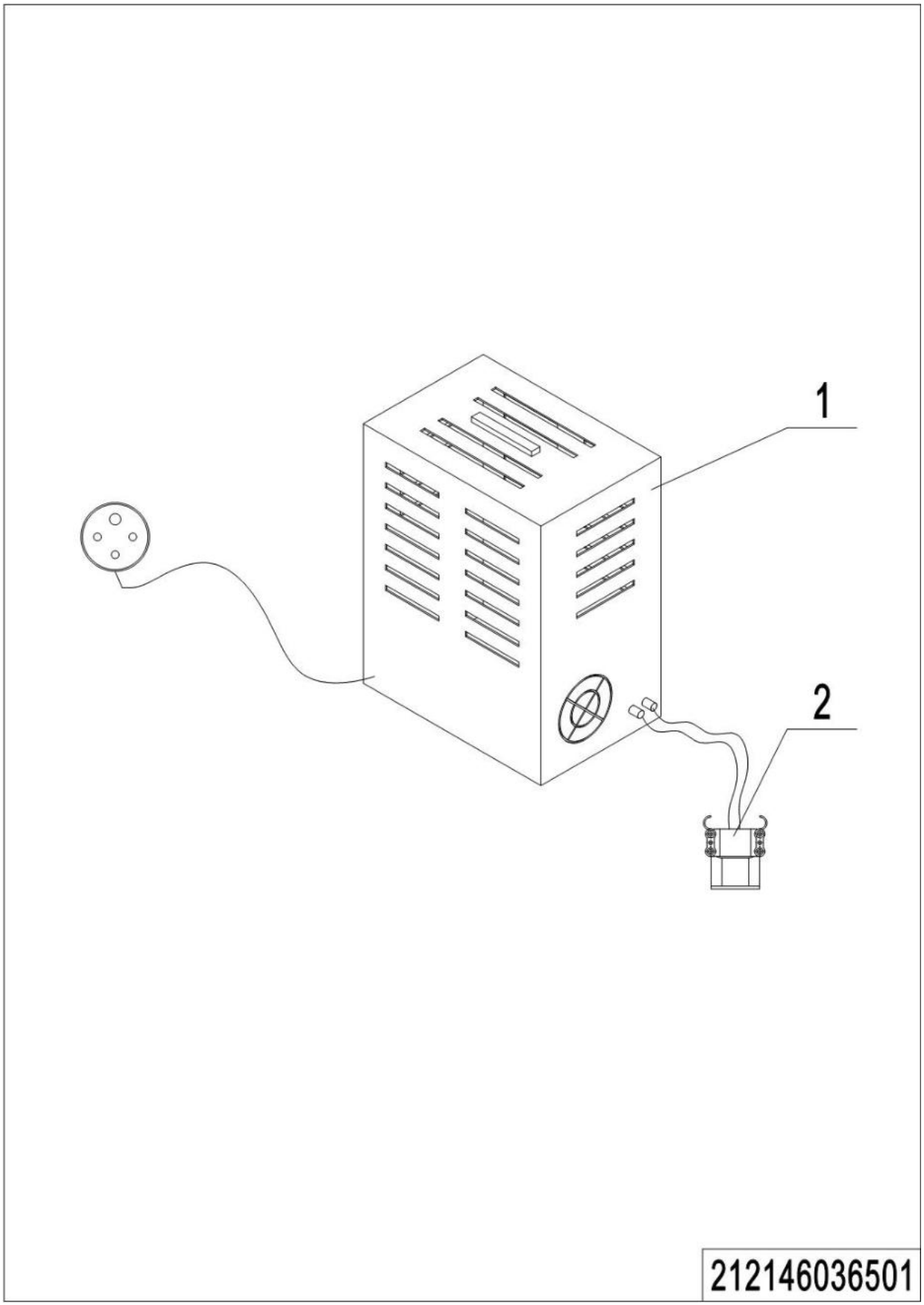

1= Supply as package. 2= Supply with constraints. 3= Phasing-out supply. 4= Supply as assembly. 5= Check other tables.

05 Charger (212346036501)

No.	Item Code	Mark	Item Description	Qty.	Substitute	Note
1	920400100011		Connector	1		Lead Acid
1	920400100037		Connector	1		Lithium
2	921000200067		Charger48V55A(Aisa-CHN)	1		Lead Acid
2	921000200068		Charger48V55A(Aisa-ENG)	1		Lead Acid
2	921000200069		Charger48V55A(EU)	1		Lead Acid
2	921000200070		Charger48V55A(ENG)	1		Lead Acid
2	921000200071		Charger48V55A(AUS)	1		Lead Acid
2	921000200072		Charger48V55A(USA)	1		Lead Acid
2	921000200547		Charger48V55A(380V)	1		Lead Acid
2	921000200109		Charger48V80A(Aisa-CHN)	1		Lead Acid
2	921000200110		Charger48V80A(Aisa-ENG)	1		Lead Acid
2	921000200111		Charger48V80A(EU)	1		Lead Acid
2	921000200112		Charger48V80A(ENG)	1		Lead Acid
2	921000200113		Charger48V80A(AUS)	1		Lead Acid
2	921000200114		Charger48V80A(USA)	1		Lead Acid
2	921000200553		Charger48V80A(380V)	1		Lead Acid
2	921000200560		Charger48V80A(USA220V)	1		Lead Acid
2	921000200401		Charger 48V200A(Aisa-CHN)	1		Lithium
2	921000200481		Charger 48V200A (EU)	1		Lithium
2	921000200406		Charger 48V150A(Aisa-CHN)	1		Lithium
2	921000200451		Charger 48V150A(ZA)	1		Lithium

Chapter 7: Special Parts

01 Battery Holder (212146012501)

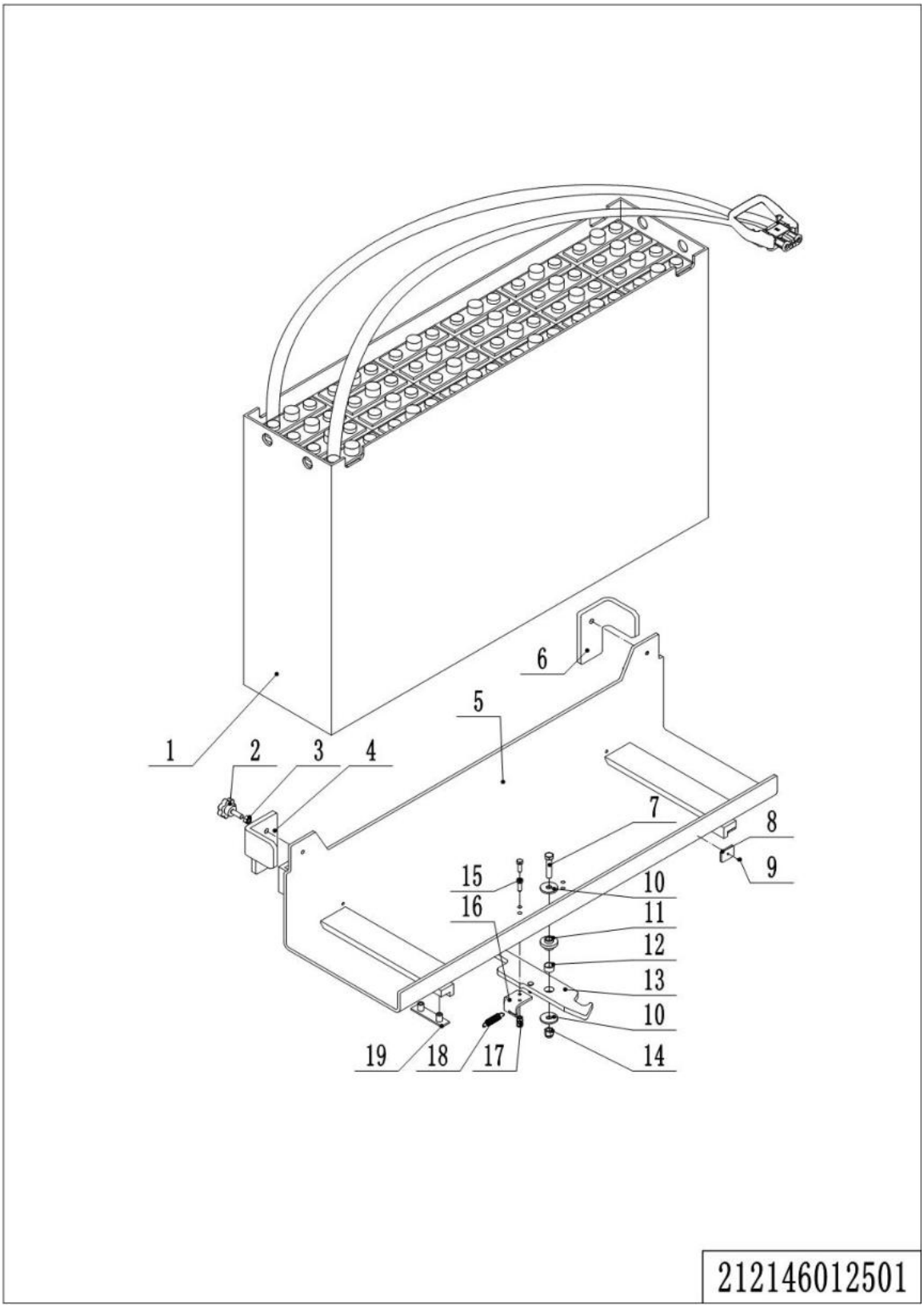

1= Supply as package. 2= Supply with constraints. 3= Phasing-out supply. 4= Supply as assembly. 5= Check other tables.

01 Battery Holder (212146012501)

No.	Item Code	Mark	Item Description	Qty.	Substitute	Note
1	212137010000		Battery48V420Ah(welded)	1		
1	212137010001		Battery48V420Ah	1		
1	212137010002		Battery48V560Ah(welded)	1		
1	212137010003		Battery48V560Ah	1		
1	212137010005		Battery48V600Ah	1		
1	212137010006		Battery48V420Ah	1		
1	212137010007		Battery48V600Ah	1		
1	920600100120		Li Battery48V400Ah	1		
1	920600100227		Li Battery48V300Ah	1		
1	920600100274		Li Battery48V300Ah	1		
1	920600100275		Li Battery48V300Ah	1		
1	920600100276		Li Battery48V400Ah	1		
1	920600100277		Li Battery48V400Ah	1		
2	911000300002		Handle	2		
3	910300100007		Nut	2		
4	213012520303		Stop Block	1		
5	212112510000		Battery Rack	1		With 420Ah Battery
5	213112510000		Battery Rack	1		With 560Ah Battery
6	213012520304		Stop Block	1		
7	910100300055		Bolt	1		
8	255021020068		cushion rubber	2		
9	910200400014		Bolt	2		
10	213012520009		Washer	2		
11	213012520008		Bracket	1		
12	940500100012		Bushing	1		
13	213012510021		Pothook	1		With 420Ah Battery
13	213112510011		Pothook	1		With 560Ah Battery
14	910300500006		Nut	1		
15	910100300023		Bolt	2		
16	213012520005		Plate	1		

1= Supply as package. 2= Supply with constraints. 3= Phasing-out supply. 4= Supply as assembly. 5= Check other tables.

01 Battery Holder (212146012501) Continuation

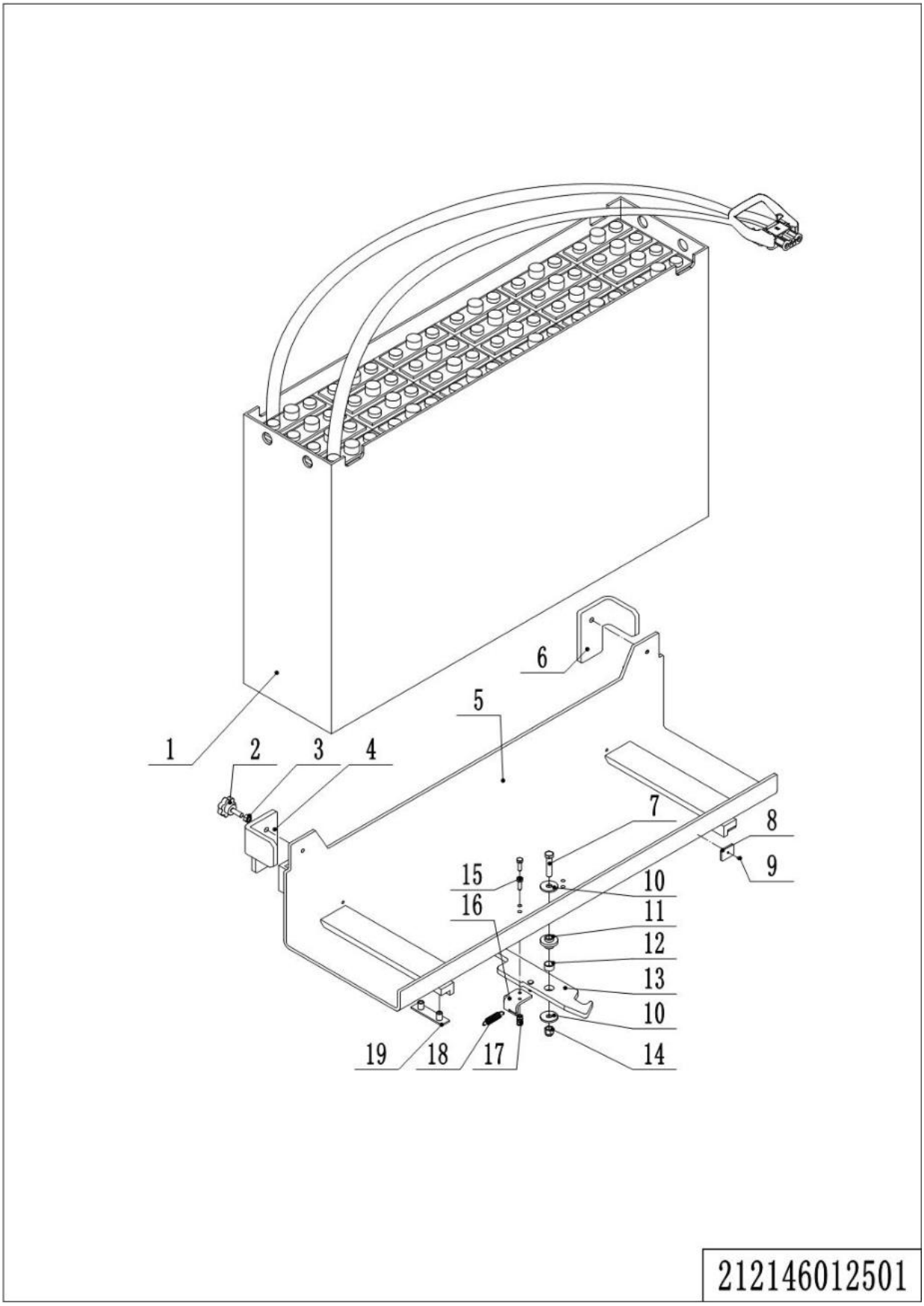

1= Supply as package. 2= Supply with constraints. 3= Phasing-out supply. 4= Supply as assembly. 5= Check other tables.

01 Battery Holder (212146012501) Continuation

No.	Item Code	Mark	Item Description	Qty.	Substitute	Note
17	910300500004		Nut	2		
18	213012520006		Spring	1		
19	255044020131		Subplate	4		

02 Monitor (213346036001)

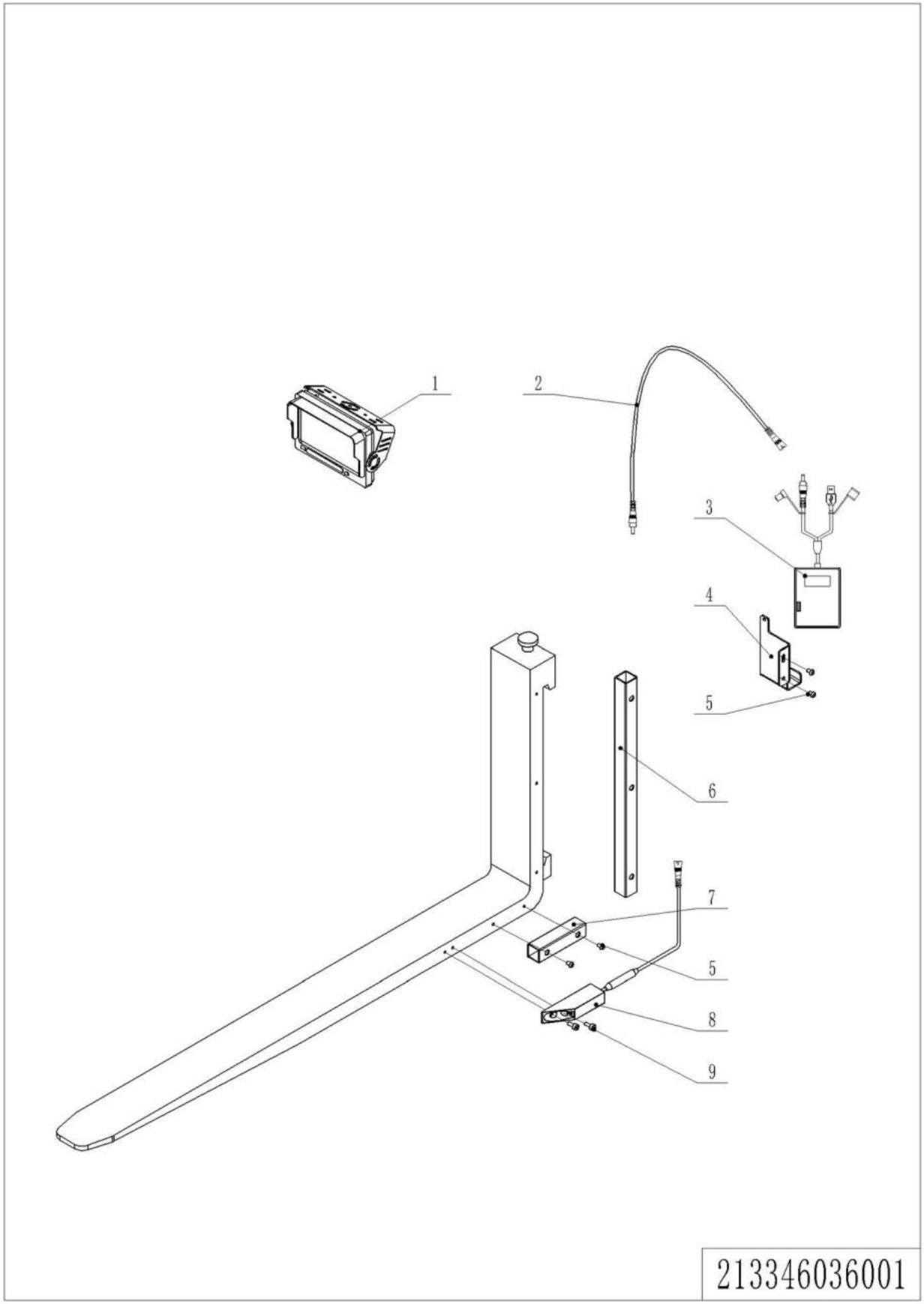

1= Supply as package. 2= Supply with constraints. 3= Phasing-out supply. 4= Supply as assembly. 5= Check other tables.

02 Monitor (213346036001)

No.	Item Code	Mark	Item Description	Qty.	Substitute	Note
1	921100100058		Display	1		
2	921500100110		Wire	1		
3	920600100384		Li Battery3.7V30000mAh	1		
4	212136020010		Mounting Bracket	1		
5	910200300017	1	Screw	7		
6	212136020002		Conduit	1		
7	212136020001		Conduit	1		
8	921100100059		Camera	1		
9	910200200033	1	Screw	2		

03 Monitor(Wired power) (213346036002)

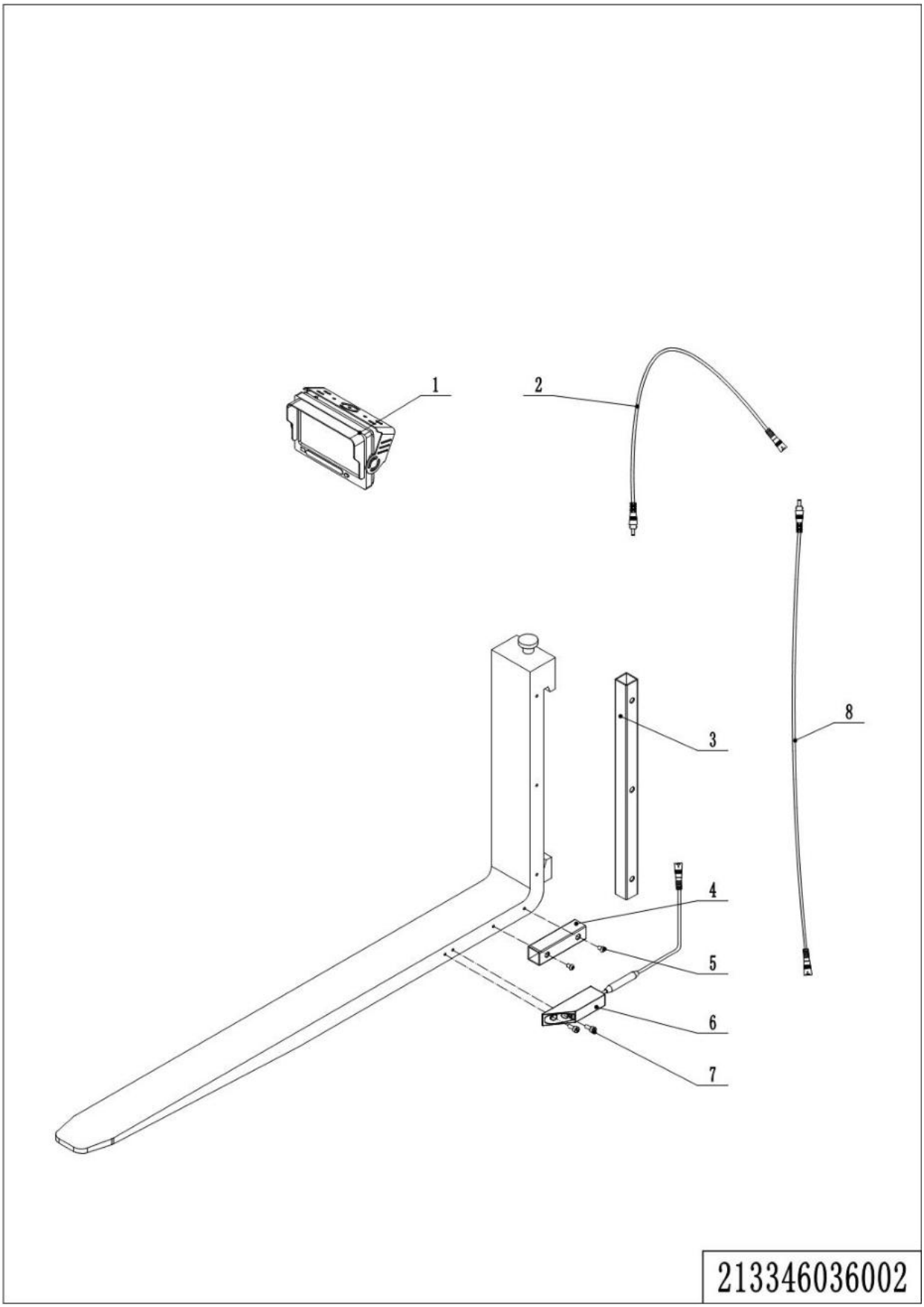

1= Supply as package. 2= Supply with constraints. 3= Phasing-out supply. 4= Supply as assembly. 5= Check other tables.

02 Monitor(Wired power) (213346036002)

No.	Item Code	Mark	Item Description	Qty.	Substitute	Note
1	921100100058		Display	1		
2	921500100110		Wire	1		
3	212136020002		Conduit	1		
4	212136020001		Conduit	1		
5	910200300017		Screw	7		
6	921100100059		Camera	1		
7	910200200033		Screw	2		
8	/		Wire	1		

Chapter 8: Others

01 Control Panel (212346010001)

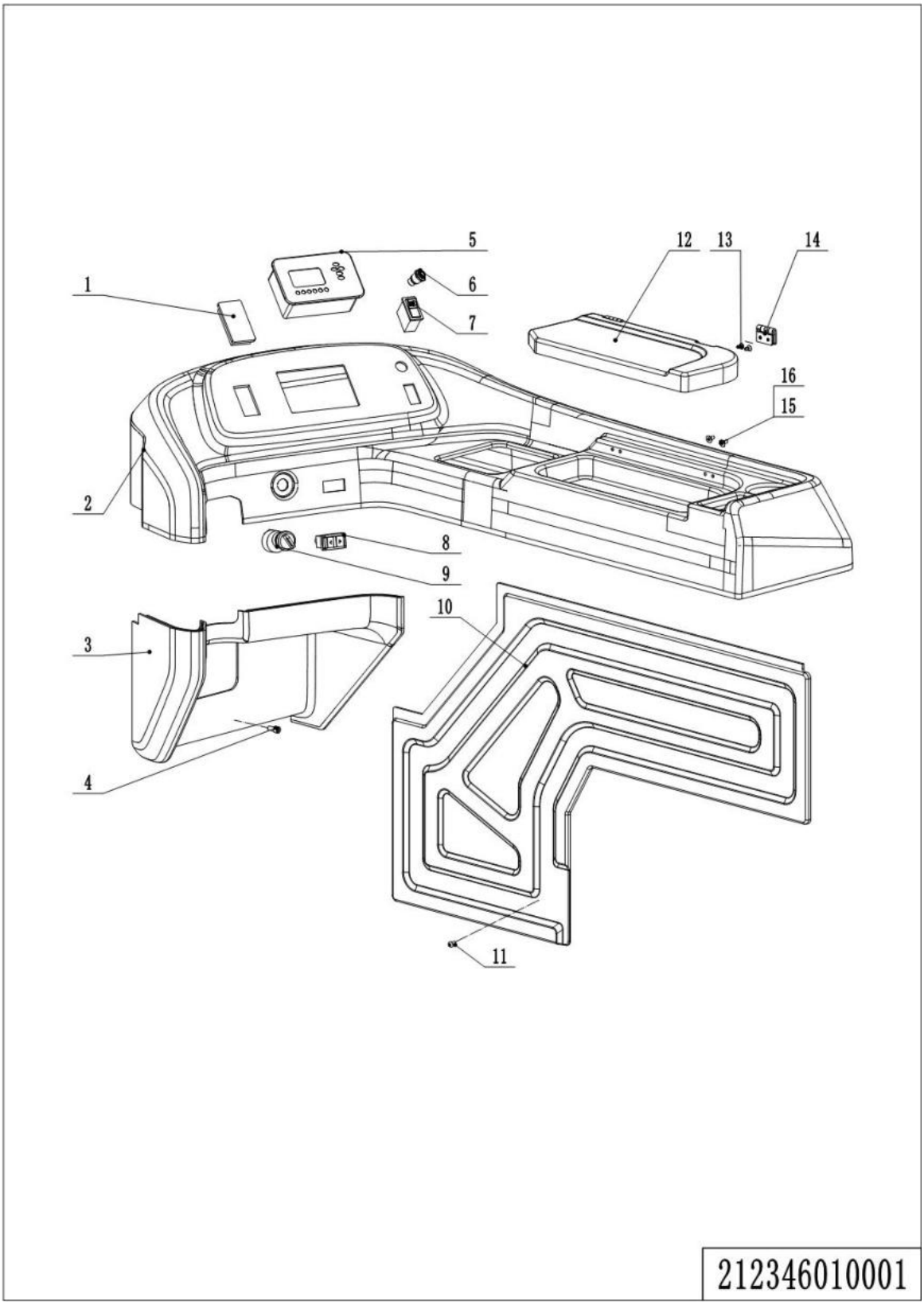

1= Supply as package. 2= Supply with constraints. 3= Phasing-out supply. 4= Supply as assembly. 5= Check other tables.

01 Control Panel (212346010001)

No.	Item Code	Mark	Item Description	Qty.	Substitute	Note
1			Password lock	1		
2	212310020000		Protective Cover	1		
3	212110020024		Protective Cover	1		
4	910200500052		Screw	1		
5	921100100011		Display	1		1232SE
5	921100100063		Display	1		F4A
5	921100100107		Display	1		INMOTION
6	920200100002		Emergency Button	1		
7	920200800009		Rocker Switch	1		
8	920200800008		Rocker Switch	1		
9	920200200002		Key Switch	1		Lead Acid
9	920200200008		Key Switch	1		Lithium
10	212310020001		Plate	1		
11	910200300017		Screw	5		
12	212110010000		Cover	1		
13	910200400009		Screw	2		
14	940801300003		Hinge	2		
15	910200300013		Screw	4		
16	212210020007		Fixing Plate	1		

02 Labels and Decals (212346047001)

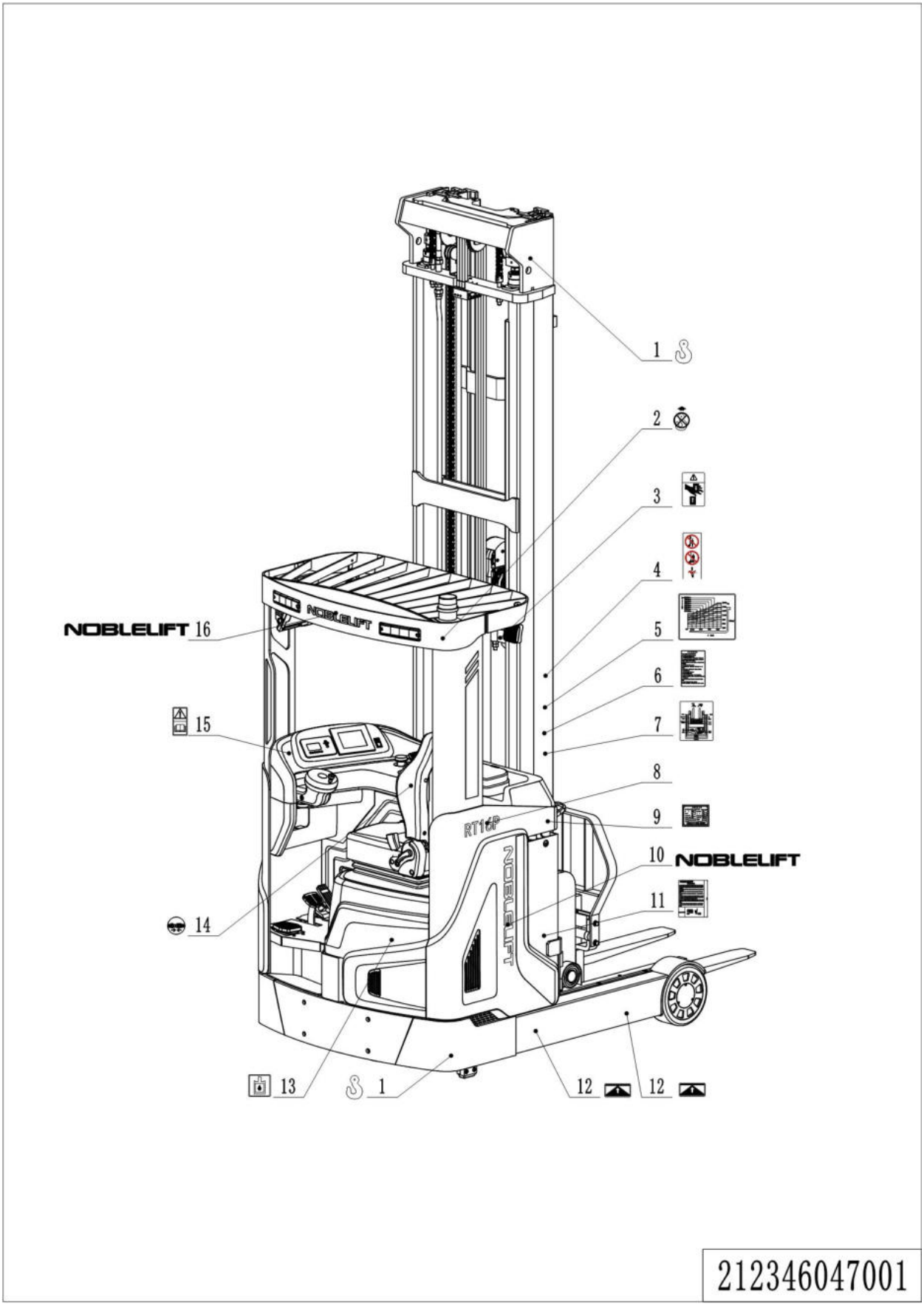

1= Supply as package. 2= Supply with constraints. 3= Phasing-out supply. 4= Supply as assembly. 5= Check other tables.

02 Labels and Decals (212346047001)

No.	Item Code	Mark	Item Description	Qty.	Substitute	Note
1	941200300001		Label	4		
2	941200100025		Label	2		
3	941200100027		Label	2		
4	941200100004		Label	2		
5	212147020016		Load Capacity Diagram	2		
6	212147020012		Label	1		
7	212147020010		Label,Lubrication	1		
8	213147020002		Label	1		
9	941200600003		Identification Plate	1		
10	212147020006		Label	1		
11	212147020011		Label	1		
12	255047020023		Label	4		
13	255047020004		Label	1		
14	255047020012		Label	1		
15	941200300011		Label	1		
16	212147020007		Label	1		

Appendix

01 Electrical Circuit Diagram 1232SE

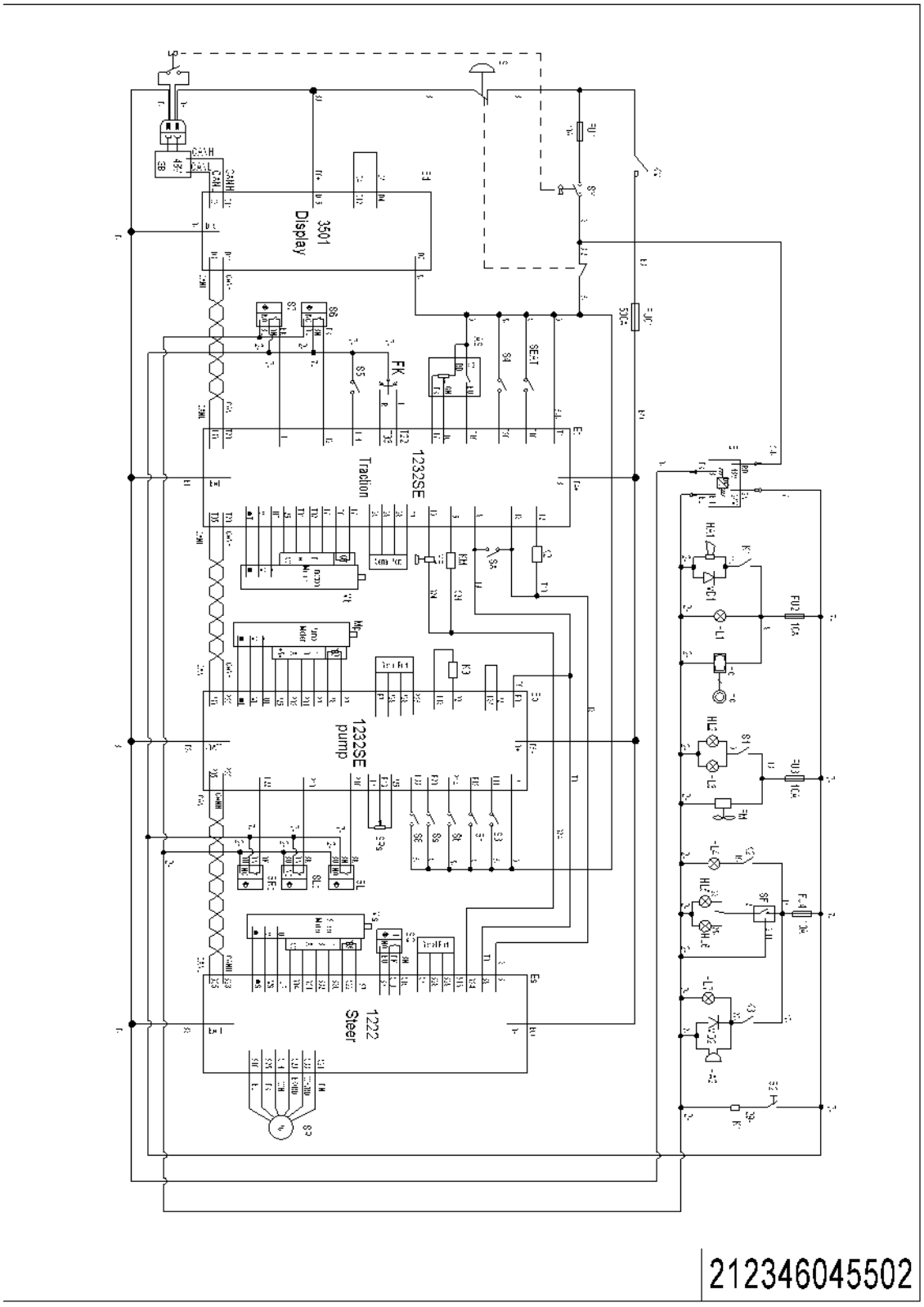

02 Electrical Circuit Diagram F4A

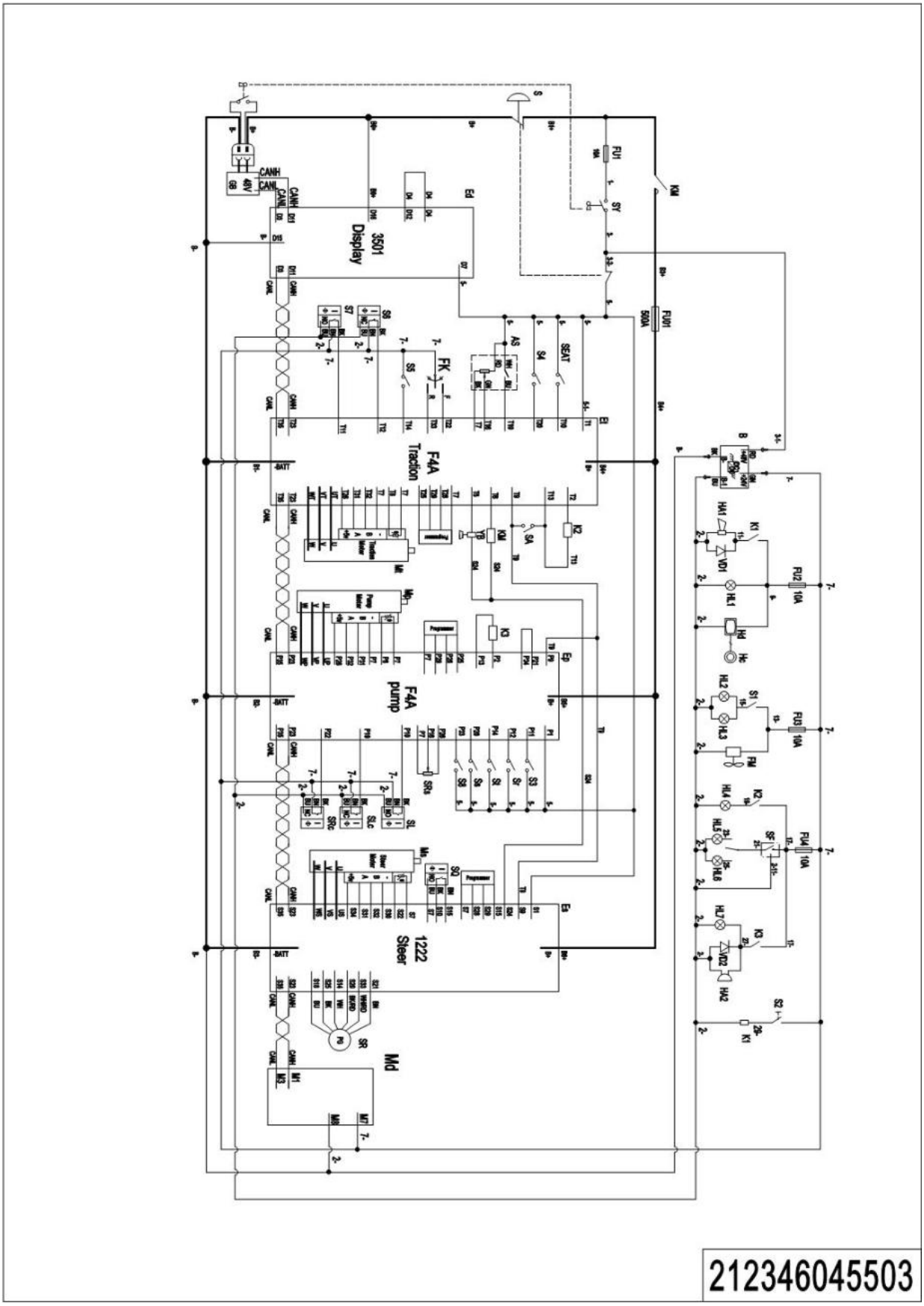

1= Supply as package. 2= Supply with constraints. 3= Phasing-out supply. 4= Supply as assembly. 5= Check other tables.

03 Electrical Circuit Diagram INMOTION

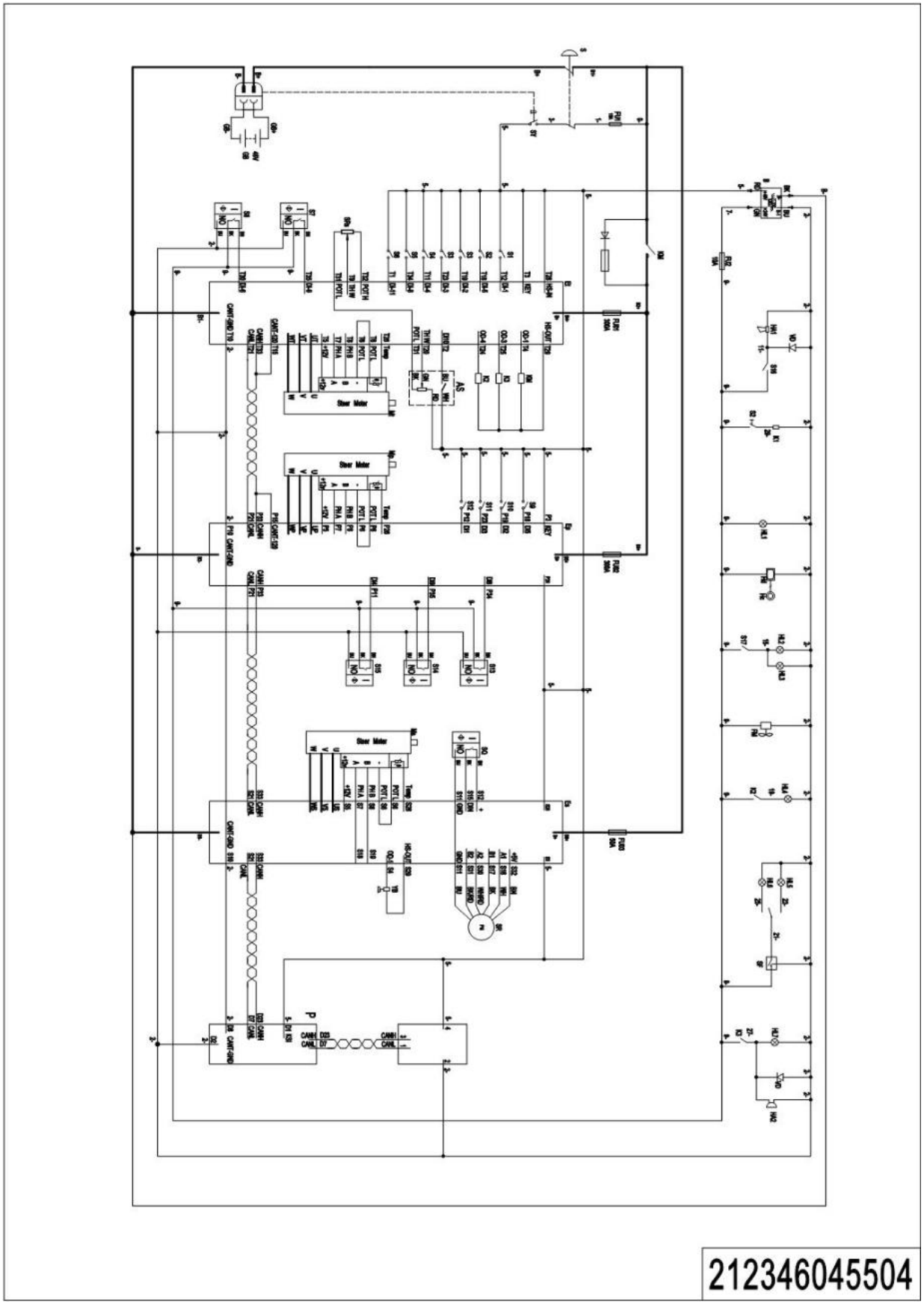

1= Supply as package. 2= Supply with constraints. 3= Phasing-out supply. 4= Supply as assembly. 5= Check other tables.

04 Hydraulic Circuit Diagram

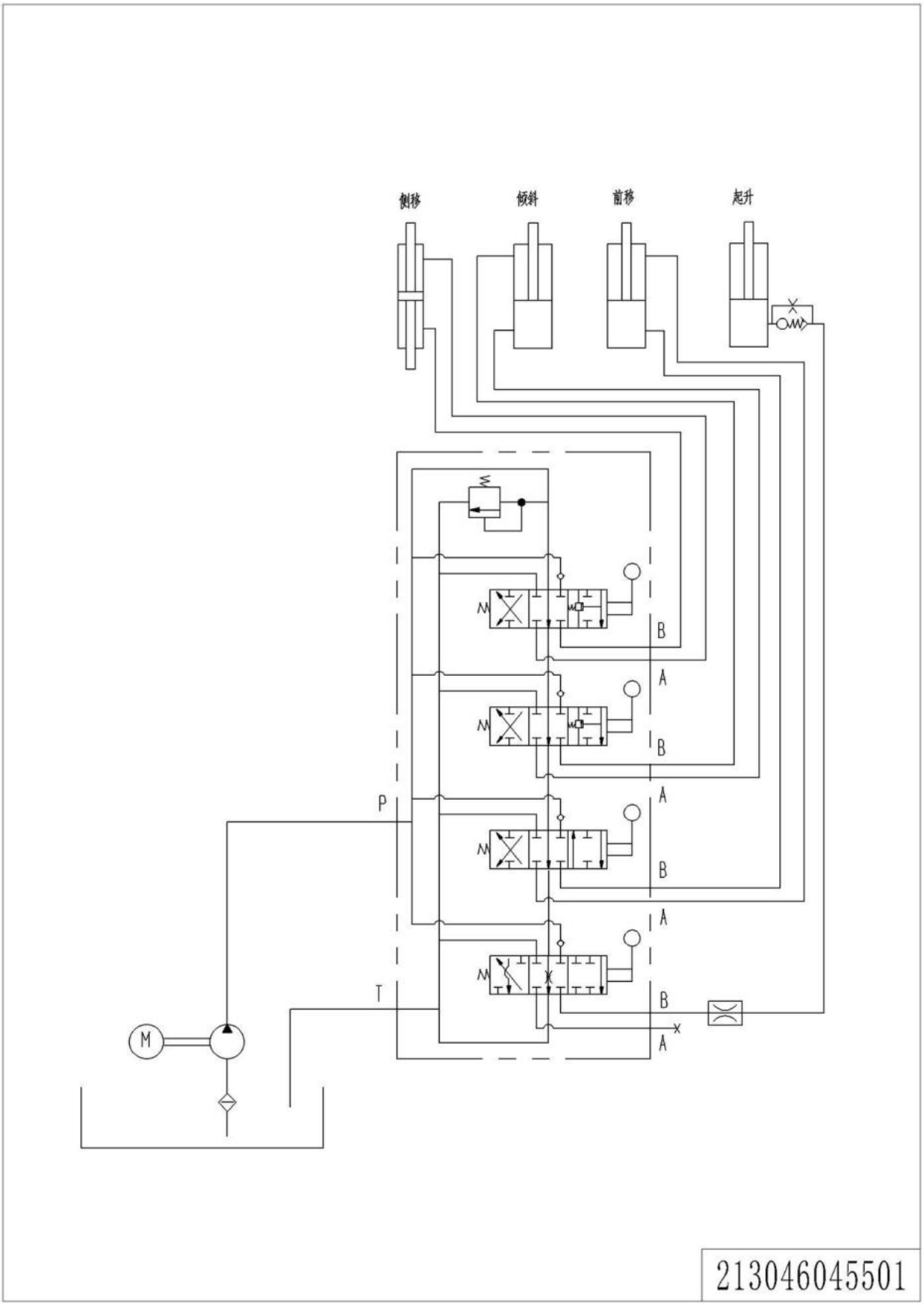

1= Supply as package. 2= Supply with constraints. 3= Phasing-out supply. 4= Supply as assembly. 5= Check other tables.

05 Consumable Parts List

No.	Item Code	Item Description	Qty.	Chapter/ Section/ Number
1	940500100012	Bushing	1	Chapter 7/01/10
2	940500100016	Bushing	1	Chapter 4/06/17，Chapter 4/07/17
3	940500100079	Bushing	20	Chapter 4/06/32，Chapter 4/07/32
4	255044020131	Subplate	4	Chapter 7/01/17
5	940300400041	WheelΦ343x140	1	Chapter 1/01/20
6	940300300034	WheelΦ285x110	2	Chapter 5/04/08
7	212198510002	Seal Kit	2	Chapter 4/01/17.01
8	212198510003	Seal Kit	1	Chapter 4/03/15.01
9	212198510000	Seal Kit	1	Chapter 2/05/2.01
10	940500400013	Bearing	4	Chapter 4/05/11
11	910700200019	Bearing	4	Chapter 4/06/03，Chapter 4/07/03
12	910700200004	Bearing	1	Chapter 5/01/12
13	212144520242	Crash Pad	2	Chapter 4/03/04
14	212144520065	Crash Pad	2	Chapter 4/01/16
15	212198510004	Seal Kit	1	Chapter 2/03/6.01

1= Supply as package. 2= Supply with constraints. 3= Phasing-out supply. 4= Supply as assembly. 5= Check other tables.