Print Number: Print Date:

NOBLELIFT

Scan QR Code for More

Reach Truck RT16Li

PARTS MANUAL

212746020101

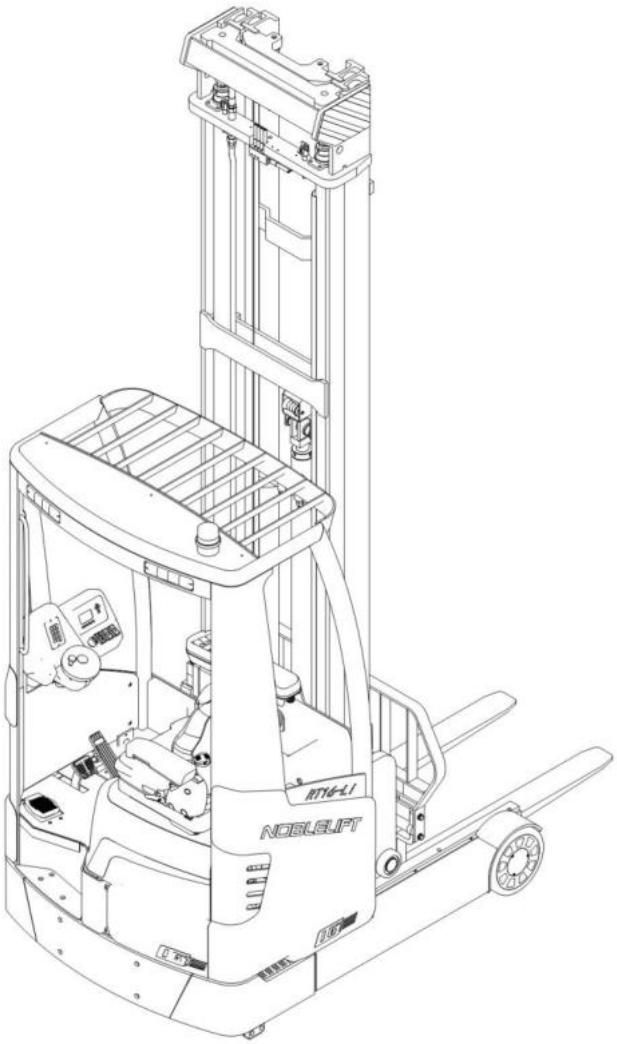

Version V02

Truck Identification Number From:

Parts Manual

RT16Li-PM02EN

Please order spare parts from authorized dealers of Noblelift Intelligent Equipment Co., LTD.

In order to avoid wrong delivery, all the orders for spare parts should specify the following items:

- Truck model, identification number and manufacture year.
- Orders for spare parts of mast, hydraulic transmission unit, steering axle, motor, etc. shall indicate the manufacture number of these parts.
- Codes for Noblelift spare parts are shown in the table of parts manual. Please also pay attention to the description of supply status, order quantity, etc. (check the number listed in "Mark" column of the parts manual).

"Mark" Column:

The unmarked indicates the parts are in short supply cycle.

Number 1: supply as package. Indicating these that parts are small parts and seal parts, which are supplied in package unit and in short supply cycle.

Number 2: supply with constraints. Indicating that these spare parts are not in stock and will be prepared for production after receiving the order from customers, which are in long supply cycle.

Number 3: phasing-out supply. Indicating that these parts will be replaced by new parts due to technical improvements and the current stock will not be available when these parts run out. Please check the description of technical improvements notice.

Number 4: supply as assembly. Indicating that these parts are assembly parts defined by manufacture process, which cannot be supplied as a single part.

Number 5: check other tables.

This parts manual is the property of Noblelift and can be shared under the confidential agreement only, Noblelift has the right to claim for compensation of any unauthorized use. Copy without permission is not allowed. Figures in the manual are not limited by the original design. Noblelift Intelligent Equipment Co., LTD reserves the right to improve the products for continuous technology progress.

Table of Contents

Chapter 1：Drive System 1
01 Drive Unit(212746013501) 1
02 Lift Unit(212146032501) 3
Chapter 2：Hydraulic System 5
01 Hydraulic Assembly(212746025001) 5
02 Reach Cylinder(212746020001) 7
03 Oil Tank(212746019001) 9
04 Tilt Cylinder(212146020501) 11
Chapter 3：Truck Frame 13
01 Chassis(212746021501) 13
02 Overhead Guard(212746022001) 15
03 Platform(212746018001) 17
04 Seat(212746037501) 19
Chapter 4：Mast 21
01 Outer Mast(212146044501) 21
01 Outer Mast(212146044501)Continuation1 23
01 Outer Mast(212146044501)Continuation2 25
02 Middle Mast (212146044502) 27
03Inner Mast (212146044503) 29
03Inner Mast (212146044503)Continuation 31
04 Reach Frame(212146044504) 33
04 Reach Frame(212146044504)Continuation 35
05 Fork Carriage(212146044505) 37
06 Mast Hydraulic(212146044506) 39
06 Mast Hydraulic(212146044506)Continuation1 41
06 Mast Hydraulic(212146044506)Continuation2 43
06 Mast Hydraulic(212146044506)Continuation3 45
Chapter 5：Steering System, Braking System, Wheels 47
01 Steering Wheel(212746031501) 47
01 Steering Wheel(212746031501)Continuation 49
02 Brake Unit(212146011501) 51
03 Brake Pedal(212146011502) 53
04 Load Wheel(212146017001) 55
Chapter 6：Electrical Parts 57
01 Steering Wheel(212746033003) 57
02 Controller(Curtis 1232SE)(212746033002) 59
03 Controller(Curtis F4A)(212746033005) 61
04 Controller(Inmotion)(212746033004) 63
05 Charger(212746036501) 65
06 Battery(212746037001) 67
Chapter 7：Special Parts 69
01 Monitor(212146036001) 69

02 Monitor(Wireless)(212746036001) 71
Chapter 8：Others 75
01 Integrated Control Console(212746010001) 75
02 Labels and Decals(212746047002) 77
Appendix 79
01 Electrical Circuit Diagram(Curtis 1232SE)(212746045501) 79
02 Electrical Circuit Diagram(Curtis F4A)(212746045503) 80
03 Electrical Circuit Diagram(Inmotion)(212746045502) 81
04 Hydraulic Circuit Diagram 82
05 Consumable Parts List 83

Chapter 1：Drive System

01 Drive Unit(212746013501)

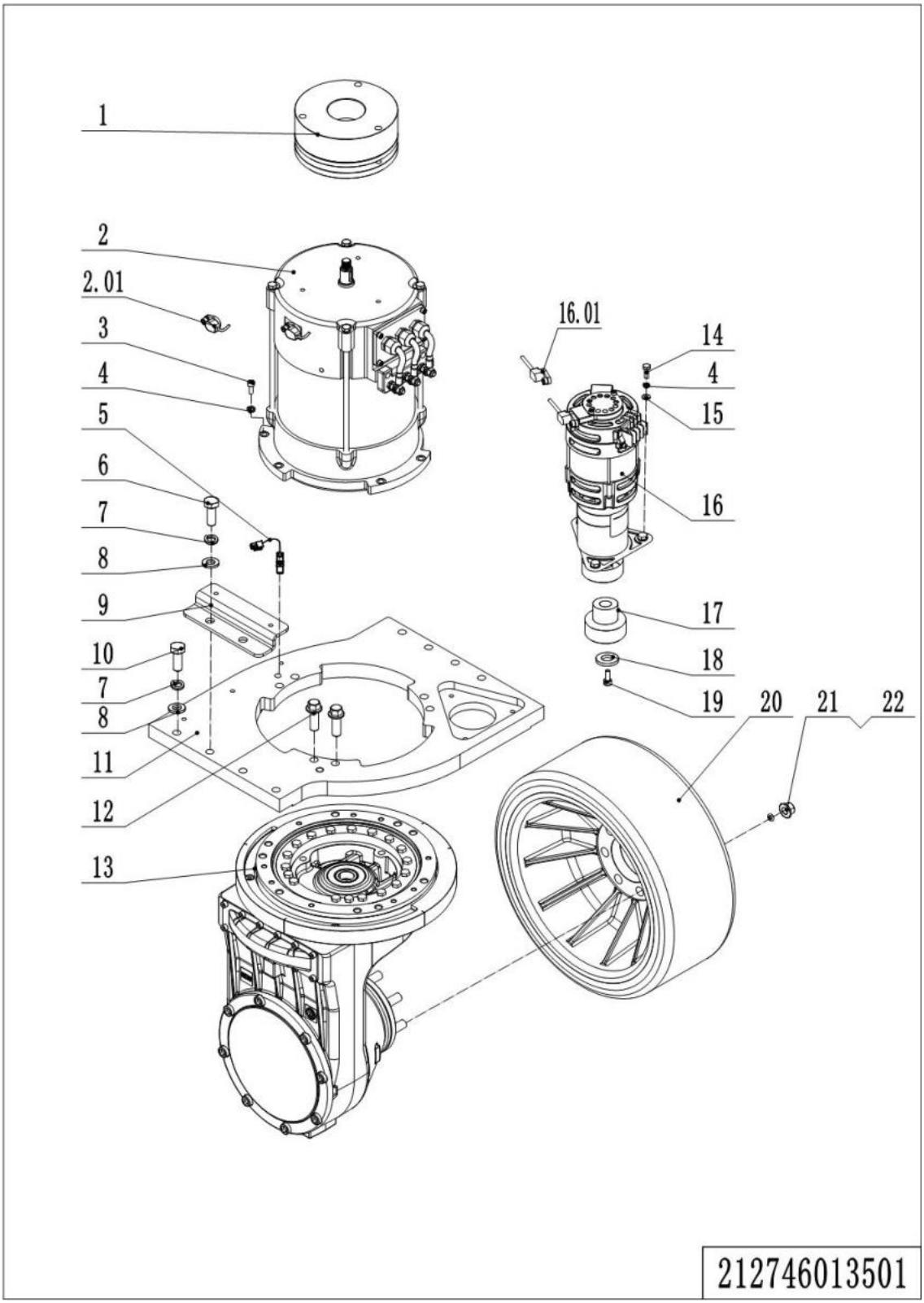

1= Supply as package. 2= Supply with constraints. 3= Phasing-out supply. 4= Supply as assembly. 5= Check other tables.

01 Drive Unit(212746013501)

No.	Item Code	Mark	Item Description	Qty.	Substitute	Note
1	940700100003		Brake	1		
2	920900100110		Motor	1		
2	920900100102		Motor	1		SCH
2.01	921800200011		Encoder	1		
2.01	921800200037		Encoder	1		SCH
3	910200200061	1	Screw	6		
4	910400500006	1	Spring Washer	10		
5	920200400022		Proximity Switch	1		
6	910100300096	1	Bolt	2		
7	910400500008	1	Spring Washer	8		
8	910400100008	1	Flat Washer	8		
9	212721520013		Fixing Plate	1		
10	910100300095	1	Bolt	7		
11	213021520224		Fixing Base	1		
12	910100800003	1	Bolt	6		
13	941000100007		Gearbox	1		
14	910400100006	1	Flat Washer	3		
15	910100300023	1	Bolt	3		
16	940900800001		Steering Unit	1		
16.01	921800200012		Encoder	1		
17	940998520071		Gear	1		
18	212213520000		Washer	1		
19	910200200058	1	Screw	1		
20	940300400041		WheelΦ343x140	1		
21	940998520072	1	Nut	7		
22	940998520073	1	Spring Washer	7		

1= Supply as package. 2= Supply with constraints. 3= Phasing-out supply. 4= Supply as assembly. 5= Check other tables.

02 Lift Unit(212146032501)

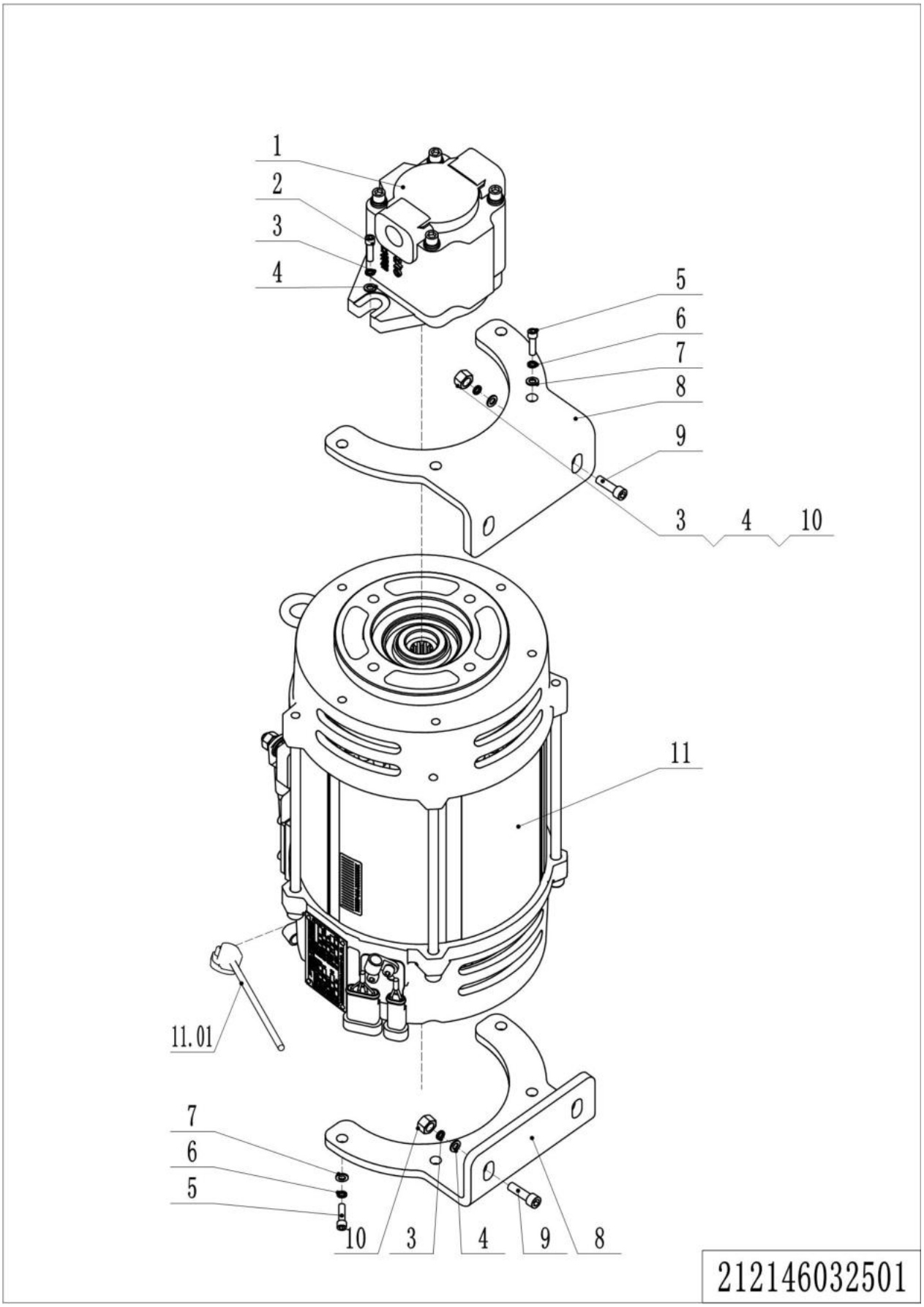

1= Supply as package. 2= Supply with constraints. 3= Phasing-out supply. 4= Supply as assembly. 5= Check other tables.

02 Lift Unit(212146032501)

No.	Item Code	Mark	Item Description	Qty.	Substitute	Note
1	950800200008		Gear Pump	1		
2	910200200077	1	Screw	2		
3	910400500007	1	Spring Washer	6		
4	910400100007	1	Flat Washer	6		
5	910200200057	1	Screw	8		
6	910400500006	1	Spring Washer	8		
7	910400100006	1	Flat Washer	8		
8	212132520000		Mounting Plate	2		
9	910200200079	1	Screw	4		
10	910300100007	1	Nut	4		
11	920900100027		Motor	1		KDS
11	920900100126		Motor	1		
11.01	921800200013		Encoder	1		KDS
11.01	921800200038		Encoder	1		

1= Supply as package. 2= Supply with constraints. 3= Phasing-out supply. 4= Supply as assembly. 5= Check other tables.

Chapter 2：Hydraulic System

01 Hydraulic Assembly(212746025001)

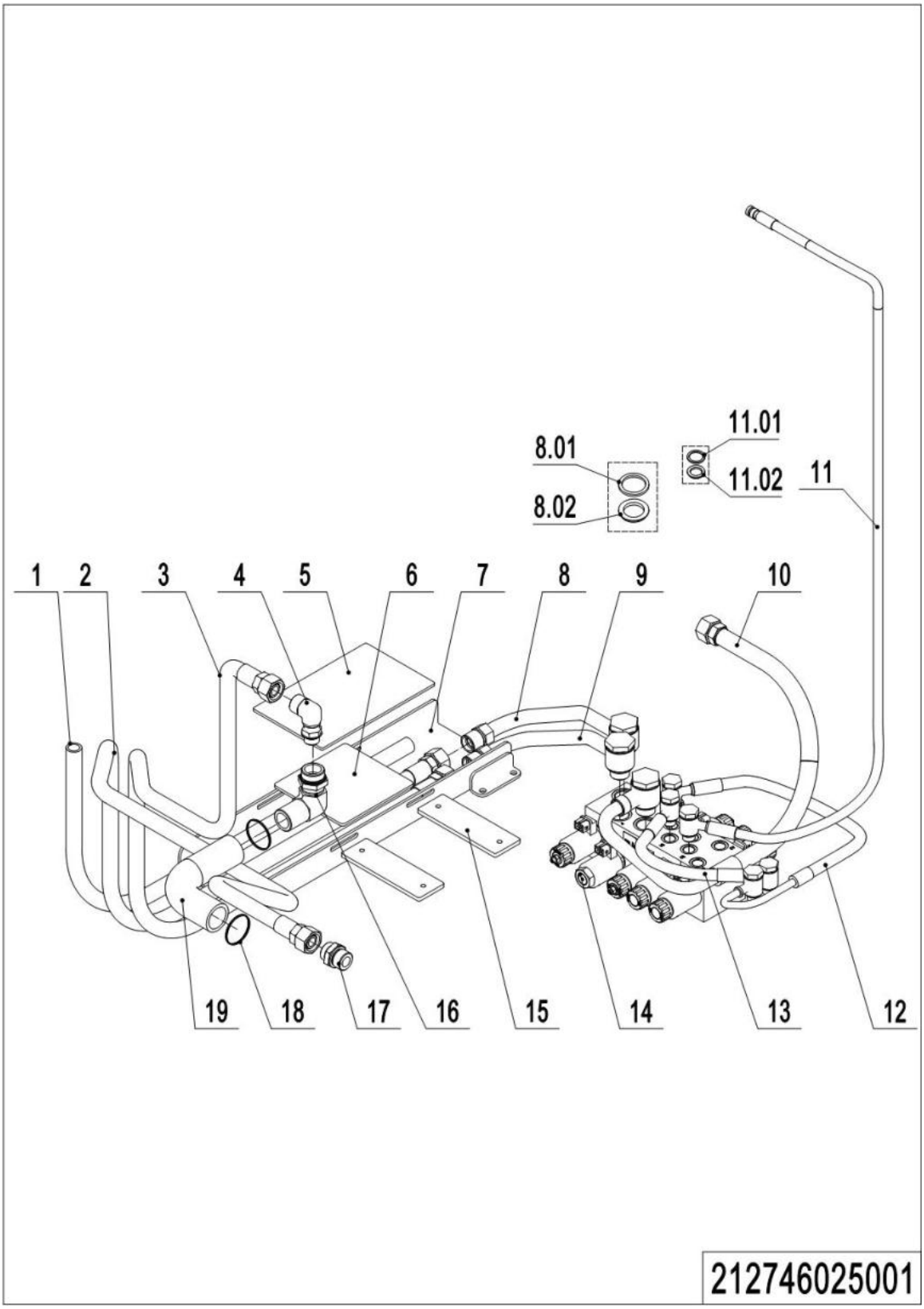

1= Supply as package. 2= Supply with constraints. 3= Phasing-out supply. 4= Supply as assembly. 5= Check other tables.

01 Hydraulic Assembly(212146025001)

No.	Item Code	Mark	Item Description	Qty.	Substitute	Note
1	212125020014		Hose	1		
2	212125020012		Hose	1		
3	212125020013		Hose	1		
4	950401100005		Joint	1		
5	212125020010		Press Plate	1		
6	212125020011		Plate	1		
7	212125010000		Guide Slot	1		
8	212125020005		Steel Tube	1		
8.01	910800900008		Washer	3		
8.02	910800900016		Washer	3		
9	212125020006		Steel Tube	1		
10	212125020028		Hose	1		
11	212125020015		Hose	4		4500
11	212125020026		Hose	4		5000
11	212125020027		Hose	4		5500
11	212125020018		Hose	4		6000
11	212125020019		Hose	4		6500
11	212125020020		Hose	4		7000
11	212125020021		Hose	4		7500
11	212125020022		Hose	4		8000
11	212125020023		Hose	4		8500
11	212125020024		Hose	4		9000
11	212125020025		Hose	4		9500
11.01	910800900005		Washer	8		
11.02	910800900015		Washer	8		
12	212125020016		Hose	1		
13	212125020004		Hose	1		
14	950600100023		Hydraulic Valve	1		
15	212125020030		Press Plate	1		
16	216525020008		Adapter	1		
17	950400300016		Joint	1		
18	911000600006		Hose Clamp	2		
19	950401100005		Joint	1		

1= Supply as package. 2= Supply with constraints. 3= Phasing-out supply. 4= Supply as assembly. 5= Check other tables.

02 Reach Cylinder(212746020001)

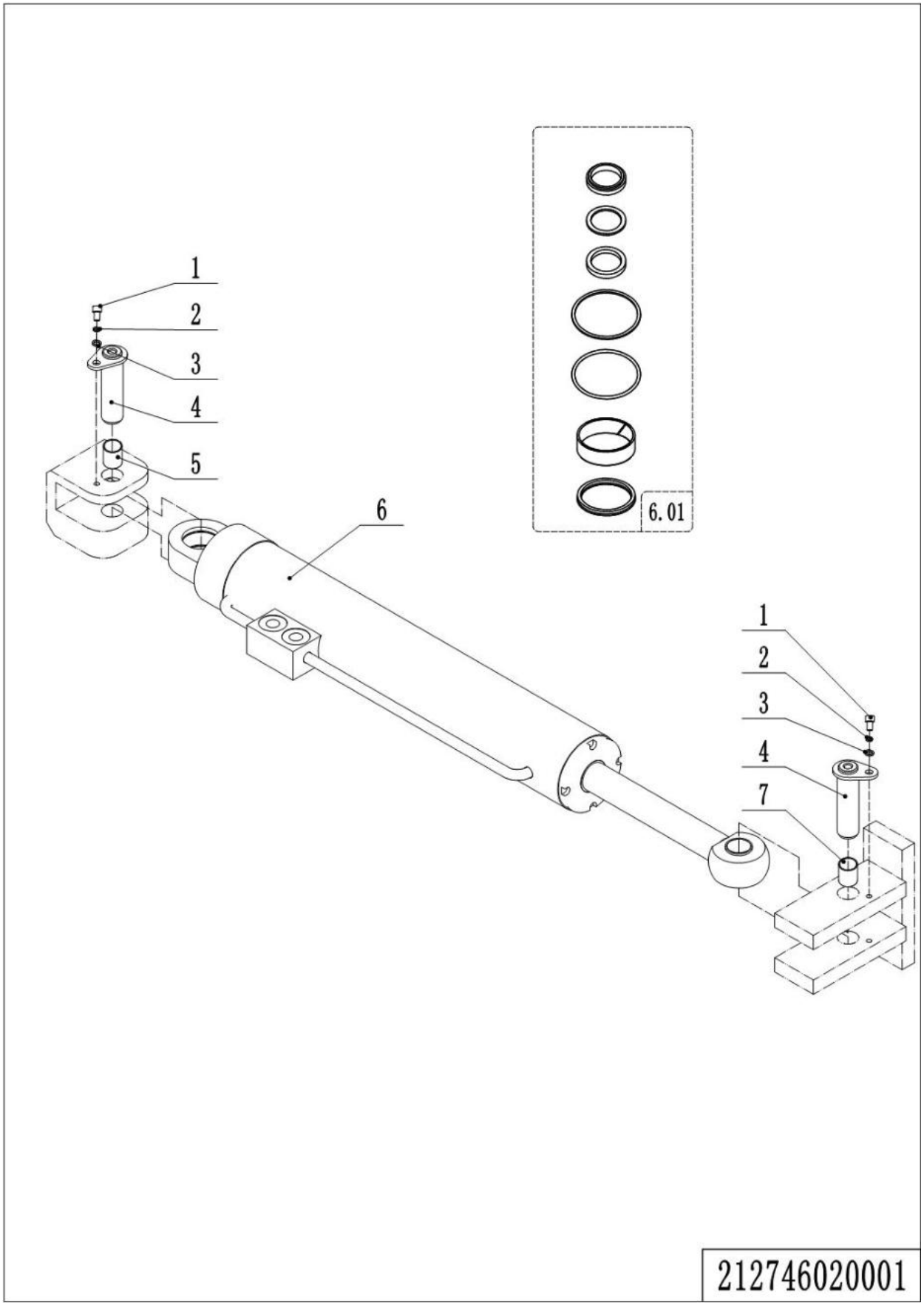

1= Supply as package. 2= Supply with constraints. 3= Phasing-out supply. 4= Supply as assembly. 5= Check other tables.

02 Reach Cylinder(212746020001)

No.	Item Code	Mark	Item Description	Qty.	Substitute	Note
1	910200200034	1	Screw	2		
2	910400500005	1	Spring Washer	2		
3	910400100005	1	Flat Washer	2		
4	212120010001		Pin	2		
5	212120020002		Bushing	1		
6	212720010000		Cylinder	1		
6.01	212198510004		Seal Kit	1		
7	212120020003		Bushing	1		

1= Supply as package. 2= Supply with constraints. 3= Phasing-out supply. 4= Supply as assembly. 5= Check other tables.

03 Oil Tank(212746019001)

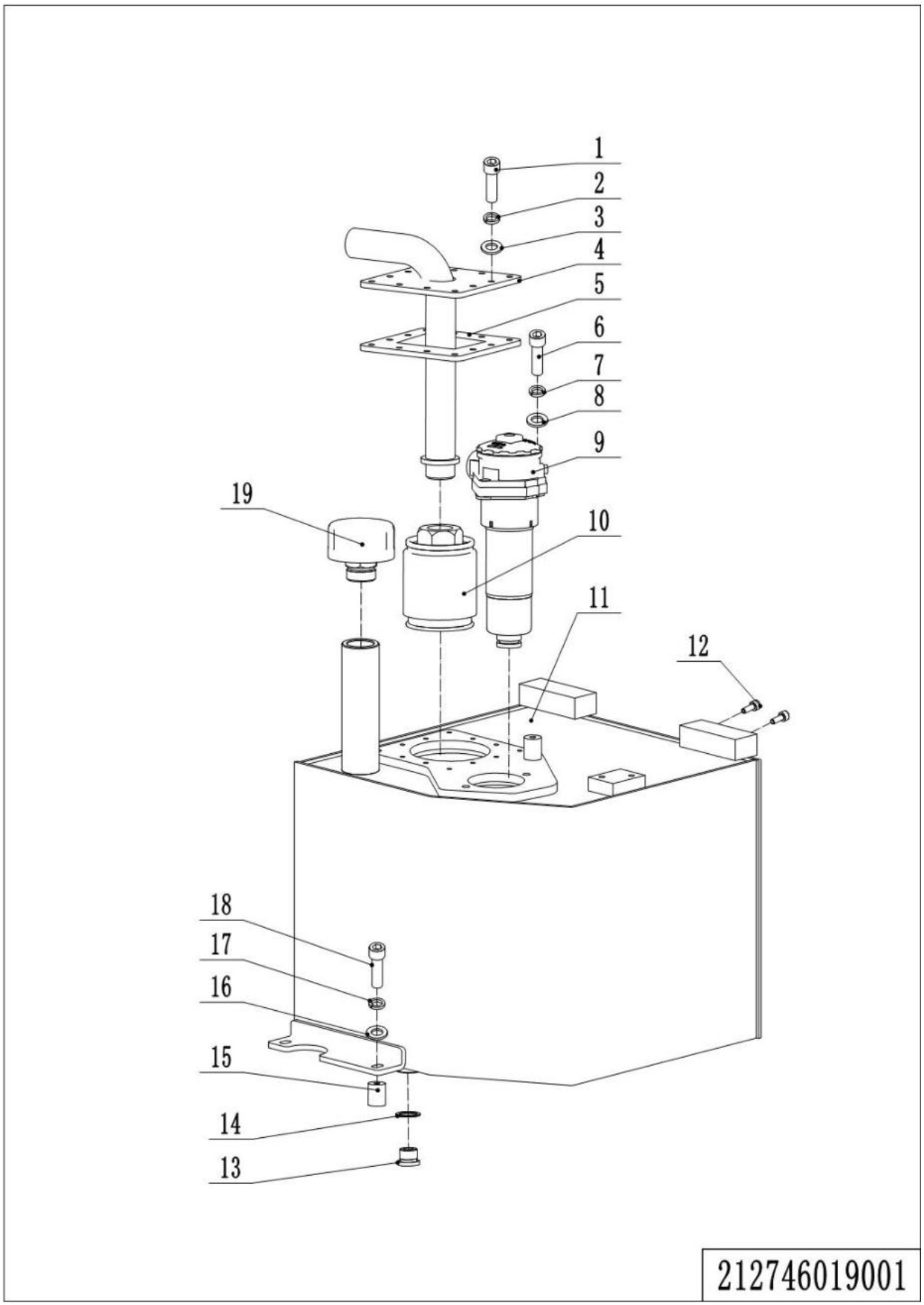

1= Supply as package. 2= Supply with constraints. 3= Phasing-out supply. 4= Supply as assembly. 5= Check other tables.

03 Oil Tank(212746019001)

No.	Item Code	Mark	Item Description	Qty.	Substitute	Note
1	910200200035	1	Screw	12		
2	910400500005	1	Spring Washer	12		
3	910400100005	1	Flat Washer	12		
4	212119010001		Cap-Tank	1		
5	212119020000		Sealing Gasket	1		
6	910200200077	1	Screw	2		
7	910400500007	1	Spring Washer	2		
8	910400100007	1	Flat Washer	2		
9	951000300005		Filter	1		
10	951000400001		Filter	1		
11	212719010000		Tank	1		
12	910200200074	1	Screw	4		
13	255019020015		Filler Plug	1		
14	910800900001		Bonded Washer	1		
15	532621520062		Crash Pad	2		
16	910400100006	1	Flat Washer	3		
17	910400500006	1	Spring Washer	3		
18	910200200058	1	Screw	2		
19	212119020019		Cap-Tank	1		

1= Supply as package. 2= Supply with constraints. 3= Phasing-out supply. 4= Supply as assembly. 5= Check other tables.

04 Tilt Cylinder(212146020501)

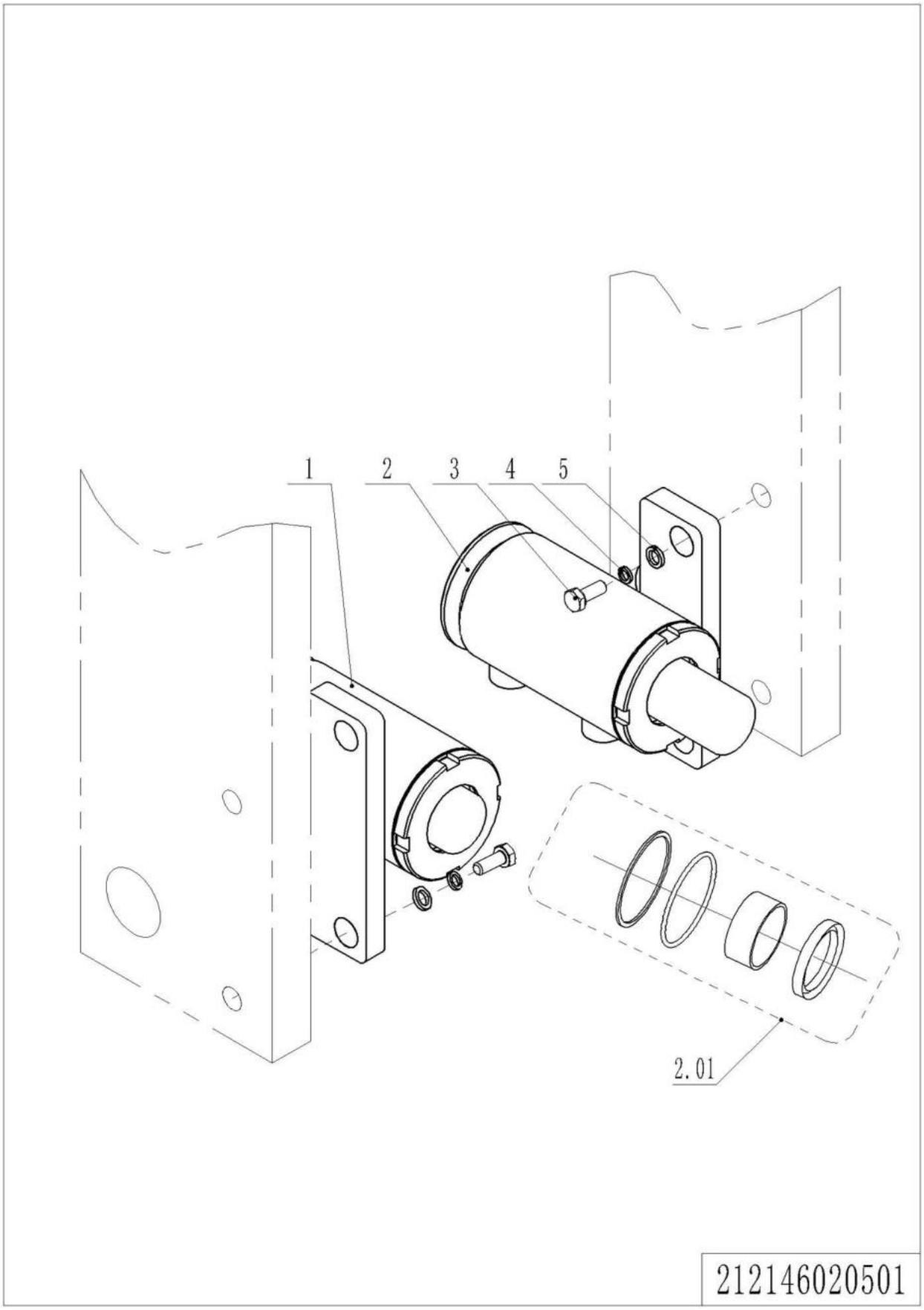

1= Supply as package. 2= Supply with constraints. 3= Phasing-out supply. 4= Supply as assembly. 5= Check other tables.

04 Tilt Cylinder(212146020501)

No.	Item Code	Mark	Item Description	Qty.	Substitute	Note
1	214120510001		Tilt Cylinder	1		
2	214120510000		Tilt Cylinder	1		
2.01	212198510000		Seal Kit	2		
3	910100300063	1	Bolt	4		
4	910400500009	1	Spring Washer	4		
5	910400100009	1	Flat Washer	4		

1= Supply as package. 2= Supply with constraints. 3= Phasing-out supply. 4= Supply as assembly. 5= Check other tables.

Chapter 3：Truck Frame

01 Chassis(212746021501)

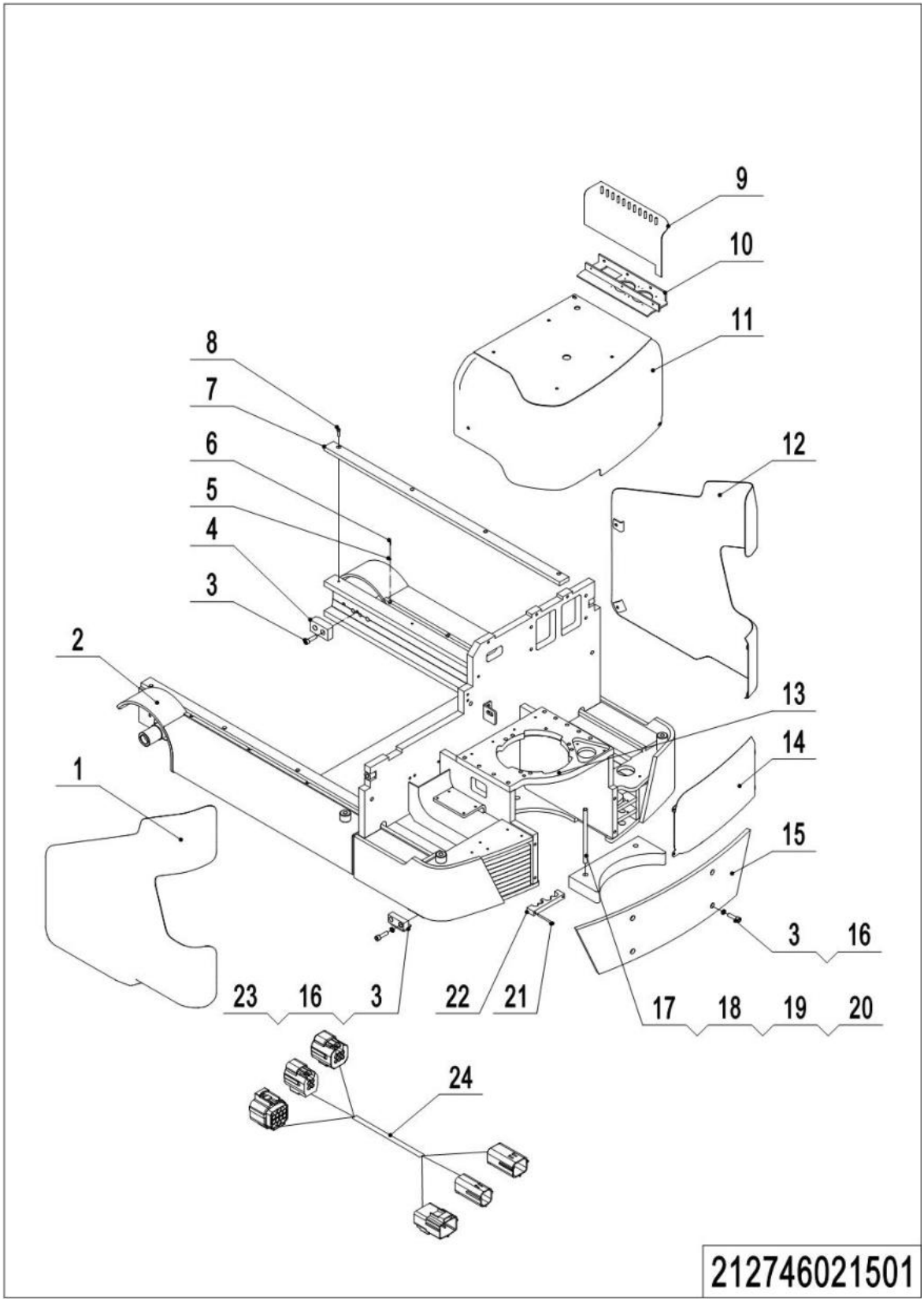

1= Supply as package. 2= Supply with constraints. 3= Phasing-out supply. 4= Supply as assembly. 5= Check other tables.

01 Chassis(212746021501)

No.	Item Code	Mark	Item Description	Qty.	Substitute	Note
1	212721510001		Side Plate(left)	1		
2	212721510000		Chassis	1		
3	910200200098		Screw	12		
4	216521520001		Crash Pad	2		
5	212121520075		Press Plate	8		
6	910200300011		Screw	8		
7	212121520049		Guide Rail	2		
8	910200200058		Screw	8		
9	212721520008		Vent	1		
10	212721510005		Fixing Plate	1		
11	212721510003		Cover	1		
12	212721510002		Side Plate(right)	1		
13	213021520224		Fixing Base	1		
14	212721510004		Close Plate	1		
15	212121520046		Close Plate	1		
16	910400500008		Spring Washer	8		
17	910300100010		Nut	2		
18	910400100010		Flat Washer	2		
19	212721520010		Fixing Plate	2		
20	910400500010		Spring Washer	2		
21	910200200065		Screw	2		
22	212121520064		Fixing Plate	1		
23	212121520068		Support Leg	2		
24	212733010003		Wiring Harness	1		Curtis
24	212733010103		Wiring Harness(Inmotion+Li)	1		Inmotion

1= Supply as package. 2= Supply with constraints. 3= Phasing-out supply. 4= Supply as assembly. 5= Check other tables.

02 Overhead Guard(212746022001)

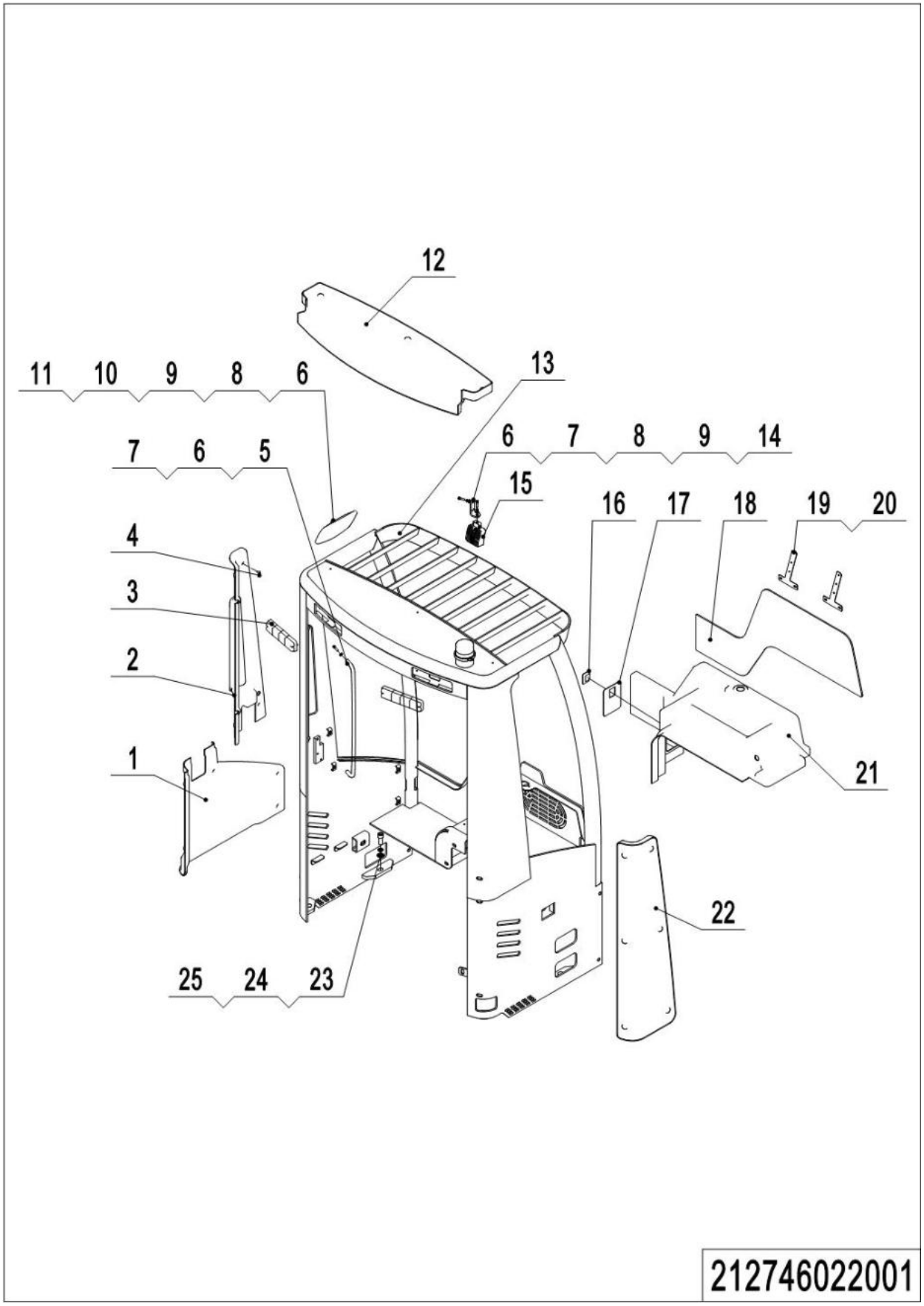

1= Supply as package. 2= Supply with constraints. 3= Phasing-out supply. 4= Supply as assembly. 5= Check other tables.

02 Overhead Guard(212746022001)

No.	Item Code	Mark	Item Description	Qty.	Substitute	Note
1	212722020032		Side Plate	1		
2	212722020034		Side Plate	1		
3	922000100003		Lamp	2		
4	910200300020		Screw	15		
5	212722020033		Handrail	1		
6	910400100006		Flat Washer	7		
7	910200200058		Screw	6		
8	910400500006		Spring Washer	5		
9	910300100006		Nut	5		
10	212722020035		Fixing Plate	1		
11	251149520001		Rearview Mirror	1		
12	212722020030		Cover	1		
13	212722010000		Overhead Guard	1		
14	212122020023		Mounting Plate	2		
15	922000100001		Lamp	2		
16	940800300002		Panel Lock	1		
17	212722010001		Side Door	1		
18	212722020046		Guard Plate	1		
19	212722020048		Mounting Plate	2		
20	212722020047		Subplate	2		
21	212722020037		Cover	1		
22	212722020031		Side Plate	1		
23	910400100010		Flat Washer	1		
24	910400500010		Spring Washer	2		
25	910200200121		Screw	2		

1= Supply as package. 2= Supply with constraints. 3= Phasing-out supply. 4= Supply as assembly. 5= Check other tables.

03 Platform(212746018001)

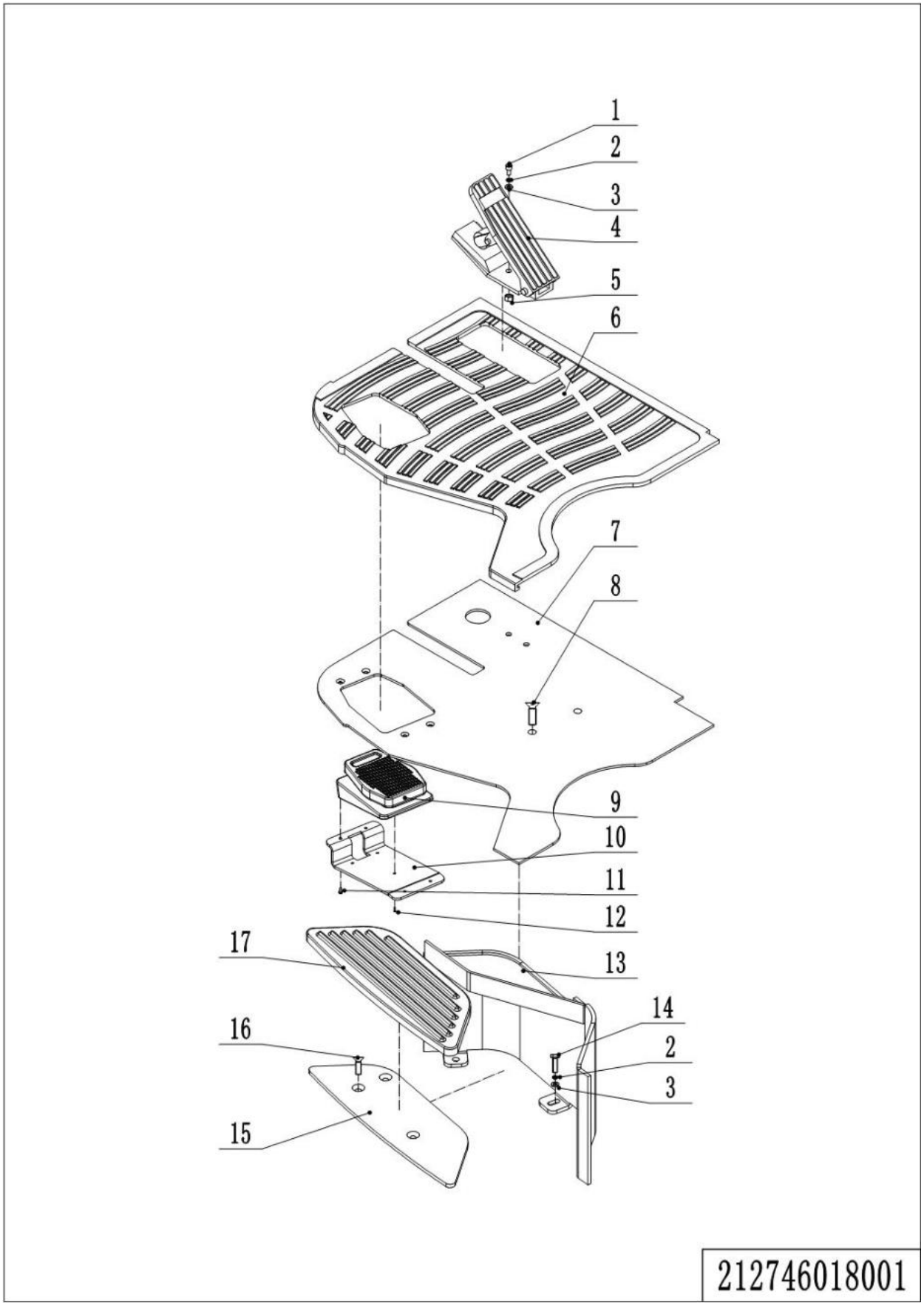

1= Supply as package. 2= Supply with constraints. 3= Phasing-out supply. 4= Supply as assembly. 5= Check other tables.

03 Platform(212746018001)

No.	Item Code	Mark	Item Description	Qty.	Substitute	Note
1	910200200057	1	Screw	2		
2	910400100006	1	Flat Washer	4		
3	910400500006	1	Spring Washer	4		
4	921700100005		Accelerator	1		
5	910300100006	1	Nut	2		
6	212718020002		Mat	1		
7	212718020001		Platform	1		
8	910200400033	1	Screw	2		
9	212133510019		Foot Switch	1		
10	212118020008		Mounting Plate	1		
11	910200400009	1	Screw	4		
12	212198520048	1	Screw	3		
13	212718010000		Bracket	1		
14	910100300022	1	Bolt	2		
15	212118010001		Platform	1		
16	910200400026	1	Screw	3		
17	212118020002		Mat	1		

1= Supply as package. 2= Supply with constraints. 3= Phasing-out supply. 4= Supply as assembly. 5= Check other tables.

04 Seat(212746037501)

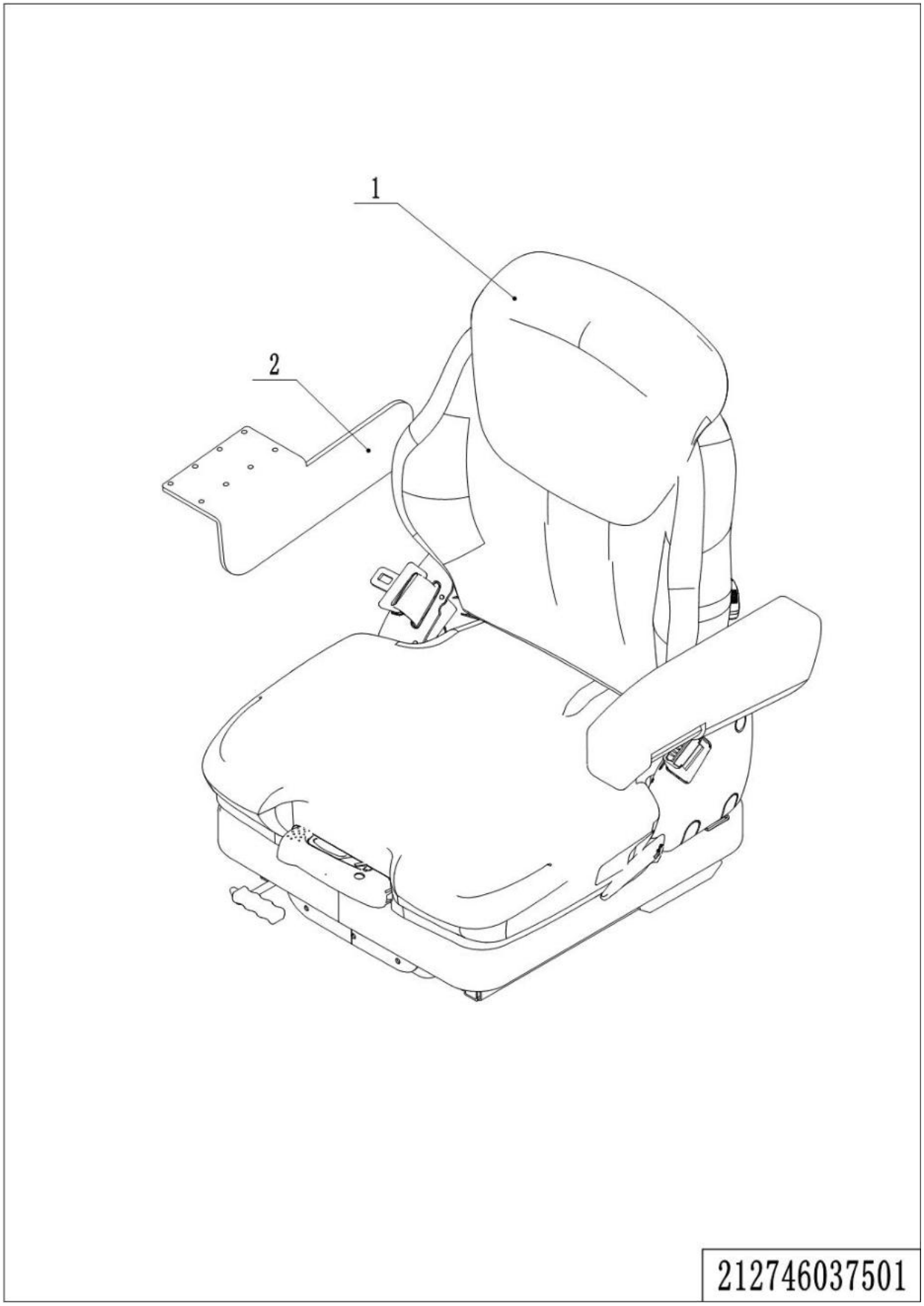

1= Supply as package. 2= Supply with constraints. 3= Phasing-out supply. 4= Supply as assembly. 5= Check other tables.

04 Seat(212746037501)

No.	Item Code	Mark	Item Description	Qty.	Substitute	Note
1	212737510000		Seat	1		
2	212737510001		Fixing Base	1		

1= Supply as package. 2= Supply with constraints. 3= Phasing-out supply. 4= Supply as assembly. 5= Check other tables.

Chapter 4：Mast

01 Outer Mast(212146044501)

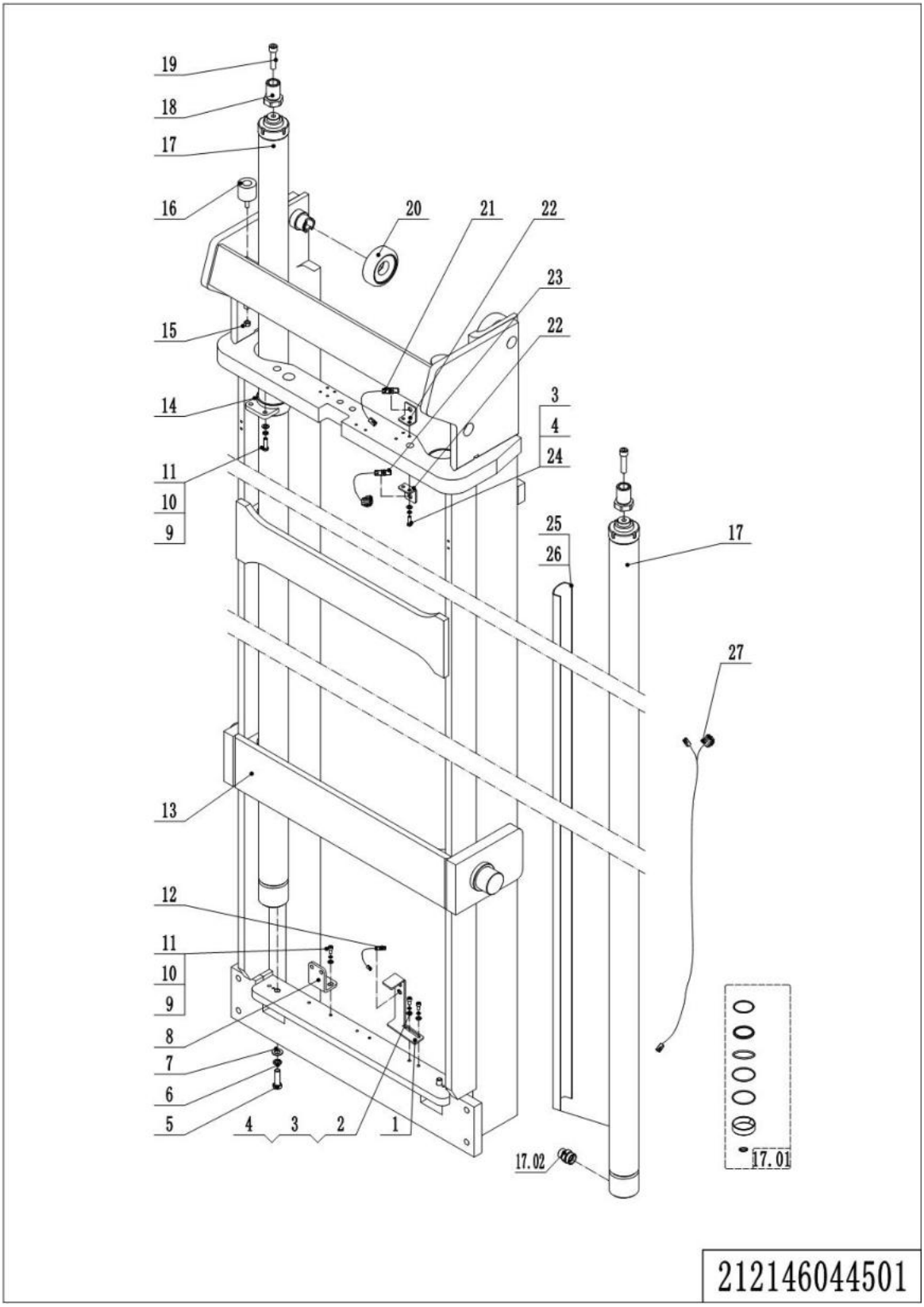

1= Supply as package. 2= Supply with constraints. 3= Phasing-out supply. 4= Supply as assembly. 5= Check other tables.

01 Outer Mast(212146044501)

No.	Item Code	Mark	Item Description	Qty.	Substitute	Note
1	212144520297		Fixing Plate	1		
2	910200200033	1	Screw	2		
3	910400500005	1	Spring Washer	6		
4	910400100005	1	Flat Washer	6		
5	910100400012	1	Bolt	2		
6	910400500008	1	Spring Washer	2		
7	910400100008	1	Flat Washer	2		
8	212144520062		Fixing Plate	1		
9	910200200058	1	Screw	6		
10	910400500006	1	Spring Washer	6		
11	910400100006	1	Flat Washer	6		
12	212133510005		Proximity Switch	1		
13	212144510005		Outer Mast(4500)	1		
13	212144510006		Outer Mast(5000)	1		
13	212144510007		Outer Mast(5500)	1		
13	212144510008		Outer Mast(6000)	1		
13	212144510009		Outer Mast(6500)	1		
13	212144510010		Outer Mast(7000)	1		
13	212144510011		Outer Mast(7500)	1		
13	212144510012		Outer Mast(8000)	1		
13	212144510013		Outer Mast(8500)	1		
13	212144510014		Outer Mast(9000)	1		
13	212144510015		Outer Mast(9500)	1		
14	212144510048		Fixing Base	2		
15	910300500004	1	Nut	2		
16	212144520065		Crash Pad	2		
17	212144510055		Cylinder	2		4500
17	212144510056		Cylinder	2		5000
17	212144510057		Cylinder	2		5500
17	212144510058		Cylinder	2		6000

1= Supply as package. 2= Supply with constraints. 3= Phasing-out supply. 4= Supply as assembly. 5= Check other tables.

01 Outer Mast(212146044501)Continuation1

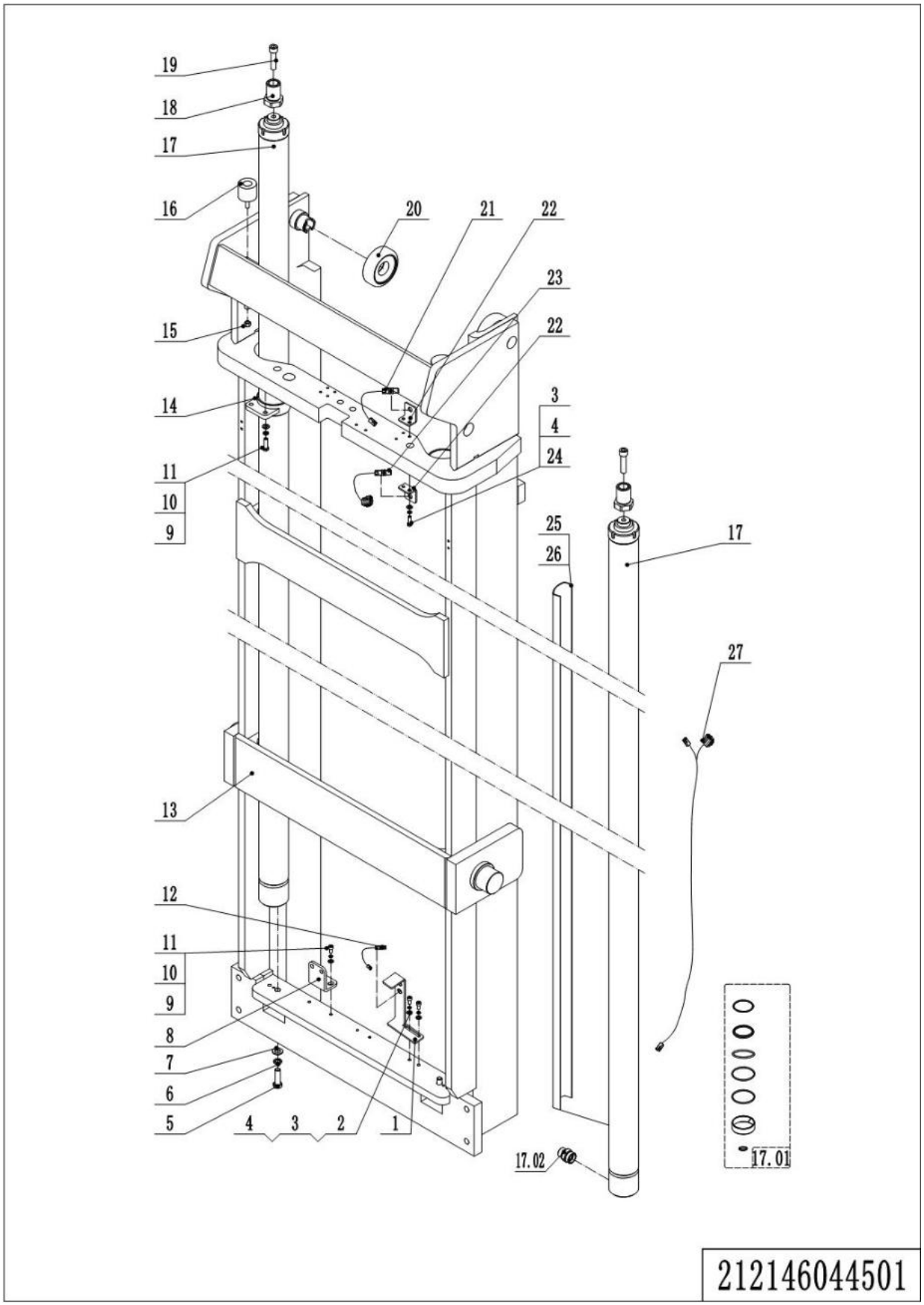

1= Supply as package. 2= Supply with constraints. 3= Phasing-out supply. 4= Supply as assembly. 5= Check other tables.

01 Outer Mast(212146044501)Continuation1

No.	Item Code	Mark	Item Description	Qty.	Substitute	Note
17	212144510059		Cylinder	2		6500
17	212144510060		Cylinder	2		7000
17	212144510061		Cylinder	2		7500
17	212144510062		Cylinder	2		8000
17	212144510063		Cylinder	2		8500
17	212144510064		Cylinder	2		9000
17	212144510065		Cylinder	2		9500
17.01	212198510002		Seal Kit	1		
17.02	212198520022		Anti-explosion Valve	1		
18	212144520060		Barrel	2		
19	910100300054	1	Bolt	2		
20	940200300052		Compound Roller	2		
21	212133510008		Proximity Switch	1		
22	212144520061		Fixing Plate	2		
23	212133510006		Proximity Switch	1		
24	910200500052	1	Screw	4		
25	212144520250		Shield	1		
25	212144520251		Shield	1		
25	212144520252		Shield	1		
25	212144520253		Shield	1		
25	212144520295		Shield	1		
26	911000600007		Hose Clamp	6		
27	212133010019		Wire Harness	1		4500
27	212133010020		Wire Harness	1		5000
27	212133010022		Wire Harness	1		5500
27	212133010023		Wire Harness	1		6000
27	212133010024		Wire Harness	1		6500
27	212133010025		Wire Harness	1		7000
27	212133010026		Wire Harness	1		7500
27	212133010027		Wire Harness	1		8000

1= Supply as package. 2= Supply with constraints. 3= Phasing-out supply. 4= Supply as assembly. 5= Check other tables.

01 Outer Mast(212146044501)Continuation2

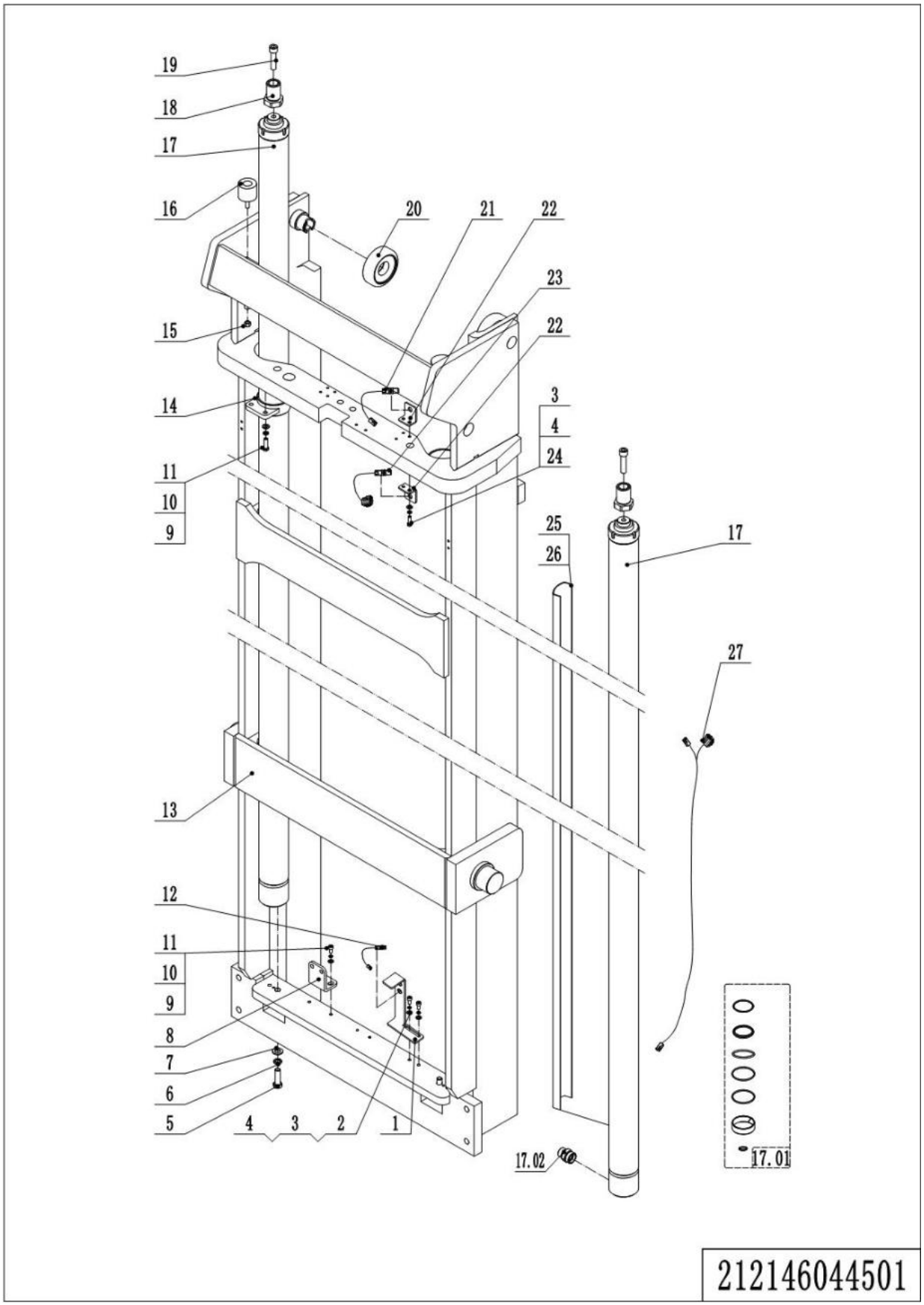

1= Supply as package. 2= Supply with constraints. 3= Phasing-out supply. 4= Supply as assembly. 5= Check other tables.

01 Outer Mast(212146044501)Continuation2

No.	Item Code	Mark	Item Description	Qty.	Substitute	Note
27	212133010028		Wire Harness	1		8500
27	212133010029		Wire Harness	1		9000
27	212133010017		Wire Harness	1		9500

02 Middle Mast (212146044502)

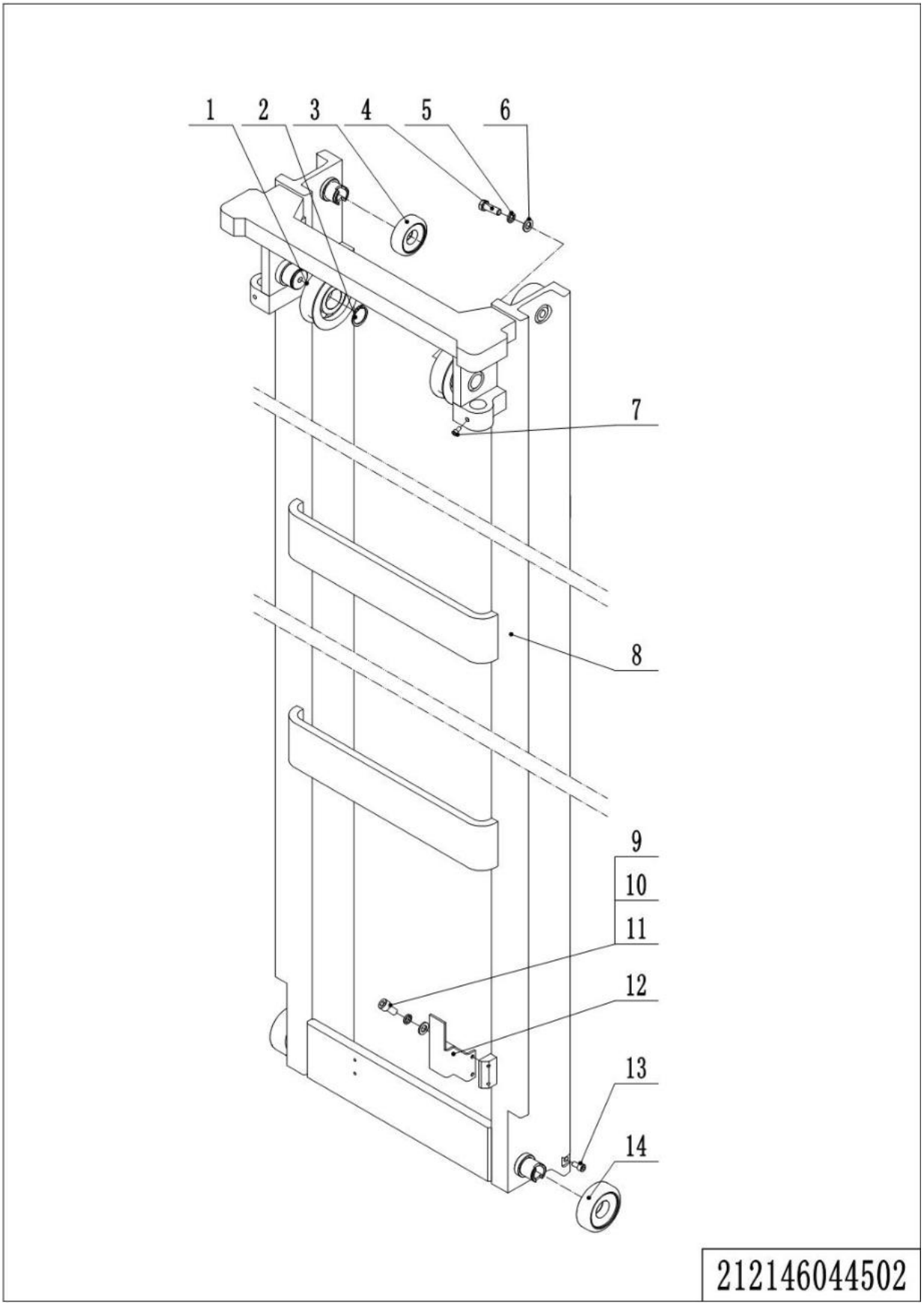

1= Supply as package. 2= Supply with constraints. 3= Phasing-out supply. 4= Supply as assembly. 5= Check other tables.

02 Middle Mast (212146044502)

No.	Item Code	Mark	Item Description	Qty.	Substitute	Note
1	940200500001		Sprocket Bearing	2		
2	910401300020		Circlip	2		
3	940200300046		Compound Roller	2		
4	910100300051		Bolt	1		
5	910400500008		Spring Washer	1		
6	910400100008		Flat Washer	1		
7	910200900014		Screw	2		
8	212144510020		Middle Mast(4500)	1		4500
8	212144510021		Middle Mast(5000)	1		5000
8	212144510022		Middle Mast(5500)	1		5500
8	212144510023		Middle Mast(6000)	1		6000
8	212144510024		Middle Mast(6500)	1		6500
8	212144510025		Middle Mast(7000)	1		7000
8	212144510026		Middle Mast(7500)	1		7500
8	212144510027		Middle Mast(8000)	1		8000
8	212144510028		Middle Mast(8500)	1		8500
8	212144510029		Middle Mast(9000)	1		9000
8	212144510030		Middle Mast(9500)	1		9500
9	910200200036		Screw	2		
10	910400500005		Spring Washer	2		
11	910400100005		Flat Washer	2		
12	212144520066		Fixing Plate	1		
13	910200200096		Screw	2		
14	940200300052		Compound Roller	2		

1= Supply as package. 2= Supply with constraints. 3= Phasing-out supply. 4= Supply as assembly. 5= Check other tables.

03Inner Mast (212146044503)

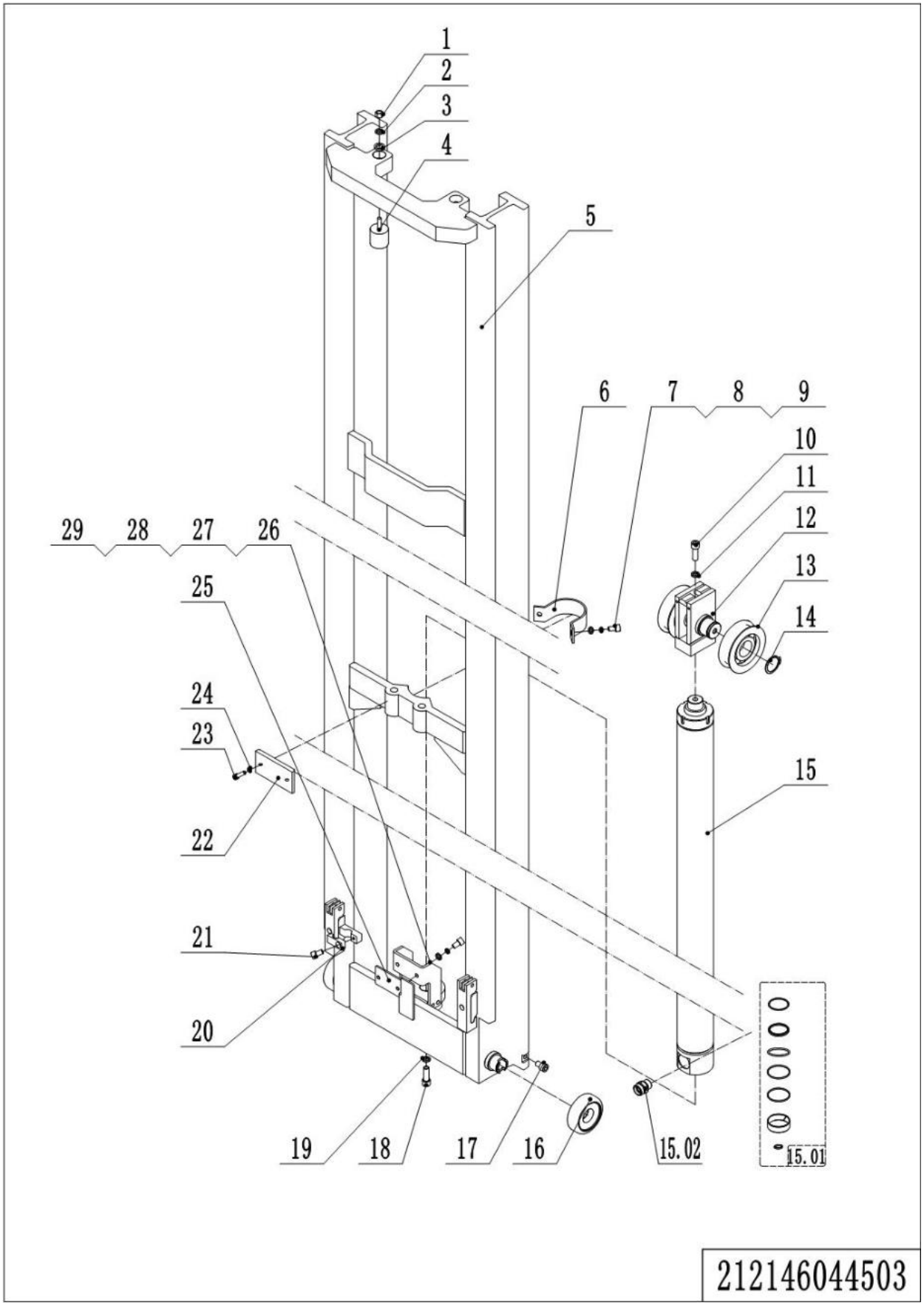

1= Supply as package. 2= Supply with constraints. 3= Phasing-out supply. 4= Supply as assembly. 5= Check other tables.

03Inner Mast(212146044503)

No.	Item Code	Mark	Item Description	Qty.	Substitute	Note
1	910300500004	1	Nut	2		
2	910400500006	1	Spring Washer	3		
3	910400100006	1	Flat Washer	2		
4	212144520242		Crash Pad	2		
5	212144510035		Inner Mast(4500)	1		4500
5	212144510036		Inner Mast(5000)	1		5000
5	212144510037		Inner Mast(5500)	1		5500
5	212144510038		Inner Mast(6000)	1		6000
5	212144510039		Inner Mast(6500)	1		6500
5	212144510040		Inner Mast(7000)	1		7000
5	212144510041		Inner Mast(7500)	1		7500
5	212144510042		Inner Mast(8000)	1		8000
5	212144510043		Inner Mast(8500)	1		8500
5	212144510044		Inner Mast(9000)	1		9000
5	212144510045		Inner Mast(9500)	1		9500
6	212144520068		Fixing Plate	1		
7	910100200005	1	Bolt	2		
8	910400500007	1	Spring Washer	2		
9	910400100007	1	Flat Washer	2		
10	910200200099	1	Screw	2		
11	910400500008	1	Spring Washer	4		
12	212144510049		Yoke	1		
13	940200500001		Sprocket Bearing	2		
14	910401300020	1	Circlip	2		
15	212144510070		Cylinder	1		4500
15	212144510071		Cylinder	1		5000
15	212144510072		Cylinder	1		5500
15	212144510073		Cylinder	1		6000
15	212144510074		Cylinder	1		6500
15	212144510075		Cylinder	1		7000

1= Supply as package. 2= Supply with constraints. 3= Phasing-out supply. 4= Supply as assembly. 5= Check other tables.

03Inner Mast (212146044503)Continuation

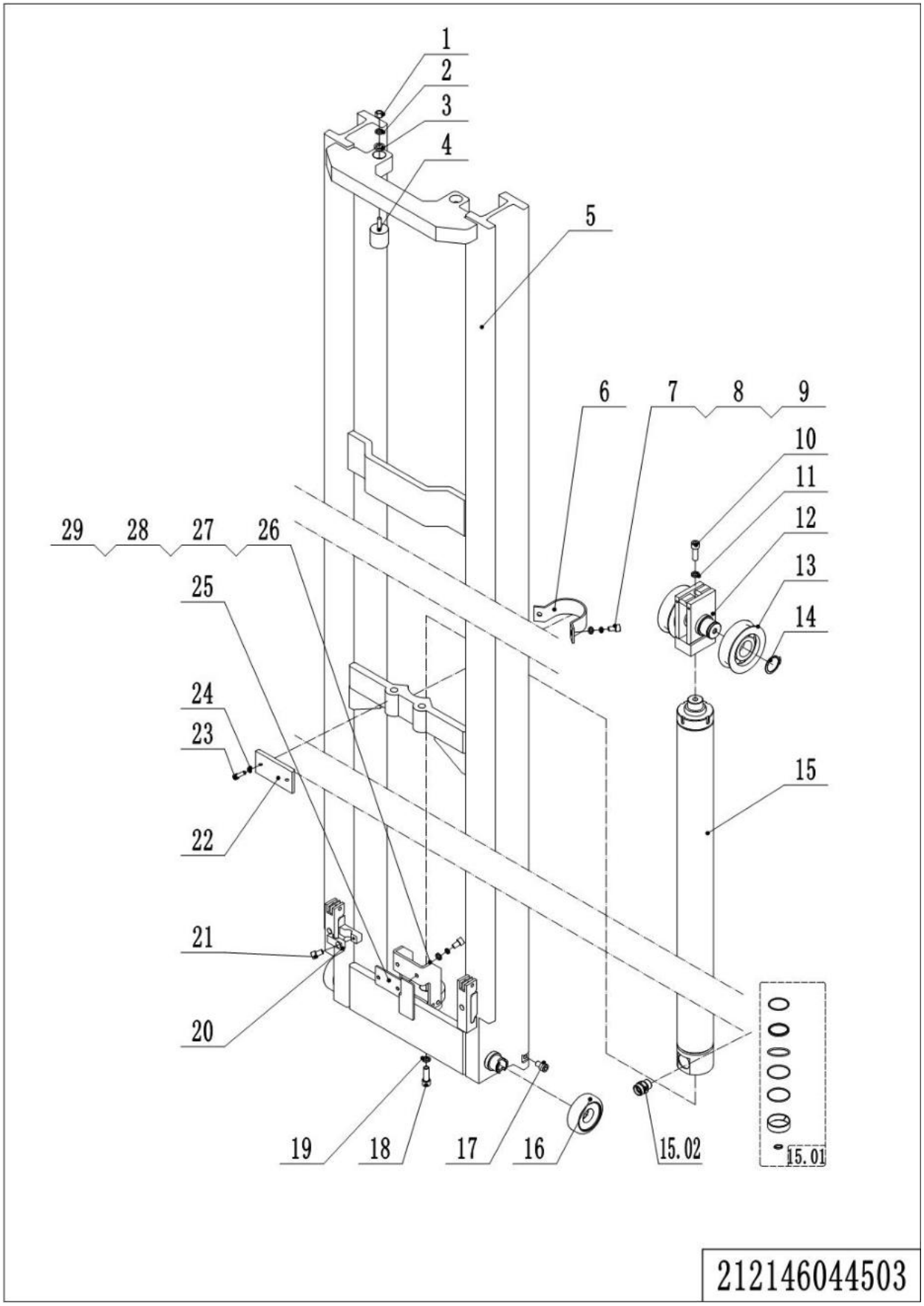

1= Supply as package. 2= Supply with constraints. 3= Phasing-out supply. 4= Supply as assembly. 5= Check other tables.

03Inner Mast(212146044503)Continuation

No.	Item Code	Mark	Item Description	Qty.	Substitute	Note
15	212144510076		Cylinder	1		7500
15	212144510077		Cylinder	1		8000
15	212144510078		Cylinder	1		8500
15	212144510079		Cylinder	1		9000
15	212144510080		Cylinder	1		9500
15.01	212198510003		Seal Kit	1		
15.02	212198520036		Anti-explosion Valve	1		
16	940200300046		Compound Roller	2		
17	910200200096	1	Screw	2		
18	910100200005	1	Bolt	1		
19	910400100008	1	Flat Washer	1		
20	213044520110		Pipe Clip	1		
21	910200200055	1	Screw	1		
22	212144520236		Press Plate	1		
23	910200500051	1	Screw	2		
24	910400500005	1	Spring Washer	2		
25	212144520298		Mounting Plate	1		
26	212144520049		Mounting Base	1		
27	910400100006	1	Flat Washer	2		
28	910400500006	1	Spring Washer	2		
29	910200200058	1	Screw	2		

1= Supply as package. 2= Supply with constraints. 3= Phasing-out supply. 4= Supply as assembly. 5= Check other tables.

04 Reach Frame(212146044504)

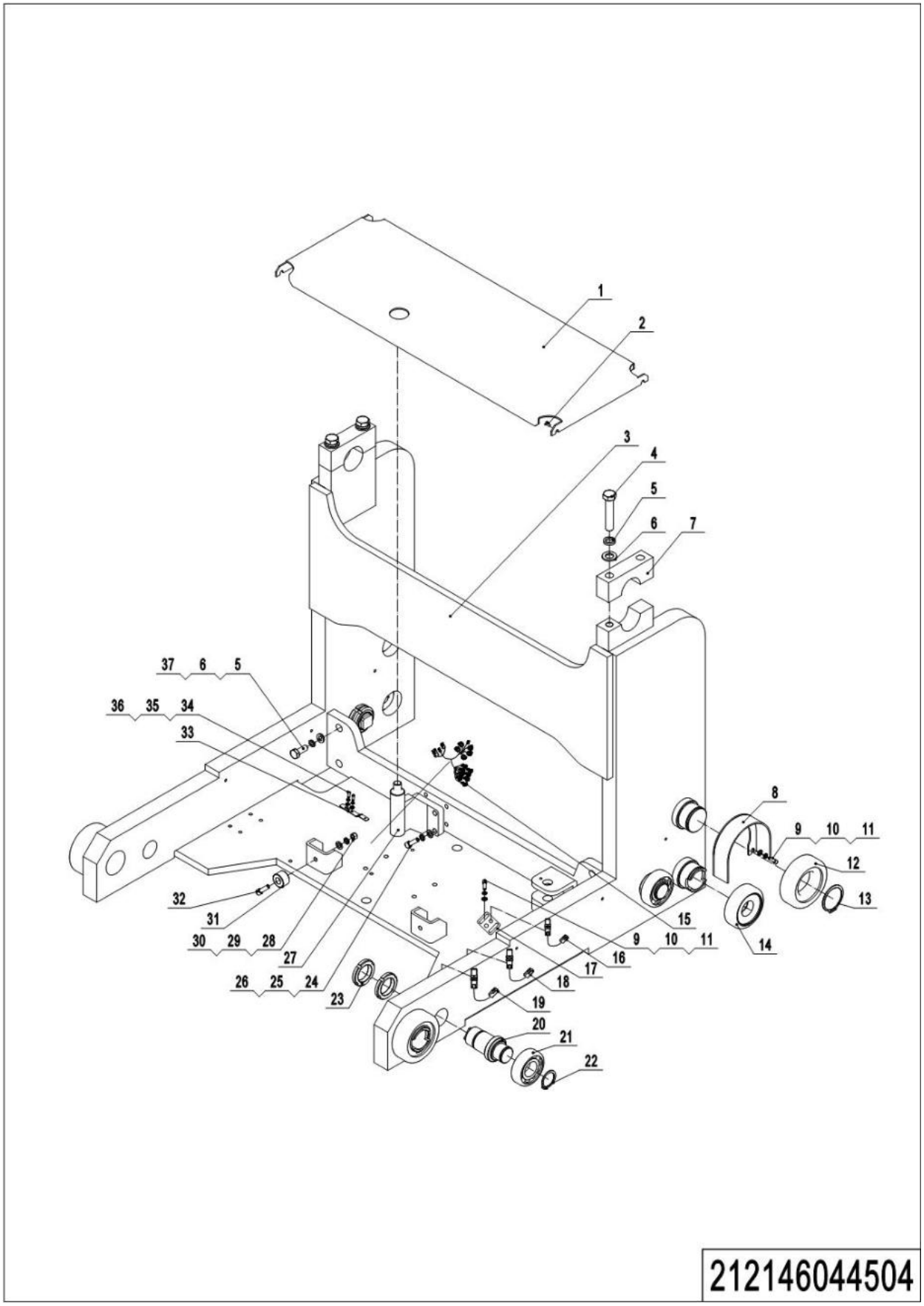

1= Supply as package. 2= Supply with constraints. 3= Phasing-out supply. 4= Supply as assembly. 5= Check other tables.

04 Reach Frame(212146044504)

No.	Item Code	Mark	Item Description	Qty.	Substitute	Note
1	212144520234		Close Plate	1		
2	910100300010	1	Bolt	4		
3	212144510050		Frame	1		
4	910100200017	1	Bolt	4		
5	910400100010	1	Flat Washer	8		
6	910400500010	1	Spring Washer	8		
7	212144520217		Fixing Plate	2		
8	212144510081		Protective Cover	2		
9	910200200036	1	Screw	10		
10	910400100005	1	Flat Washer	10		
11	910400500005	1	Spring Washer	10		
12	940200100042		Main Roller	2		
13	910401300026	1	Circlip	6		
14	940200300042		Compound Roller	4		
15	212133010015		Wire Harness	1		
16	212133510002		Proximity Switch	1		
17	212144520235		Fixing Plate	3		
18	212133510003		Proximity Switch	1		
19	212133510004		Proximity Switch	1		
20	212144520218		Axle	4		
21	940200100008		Main Roller	4		
22	910401300018	1	Circlip	4		
23	910300800008		Nut	8		
24	910200200079	1	Screw	4		
25	910400100007	1	Flat Washer	4		
26	910400500007	1	Spring Washer	4		
27	212144510051		Fixing Base	1		
28	910300500004	1	Nut	2		
29	910400100006	1	Flat Washer	8		
30	910400500006	1	Spring Washer	8		

1= Supply as package. 2= Supply with constraints. 3= Phasing-out supply. 4= Supply as assembly. 5= Check other tables.

04 Reach Frame(212146044504)Continuation

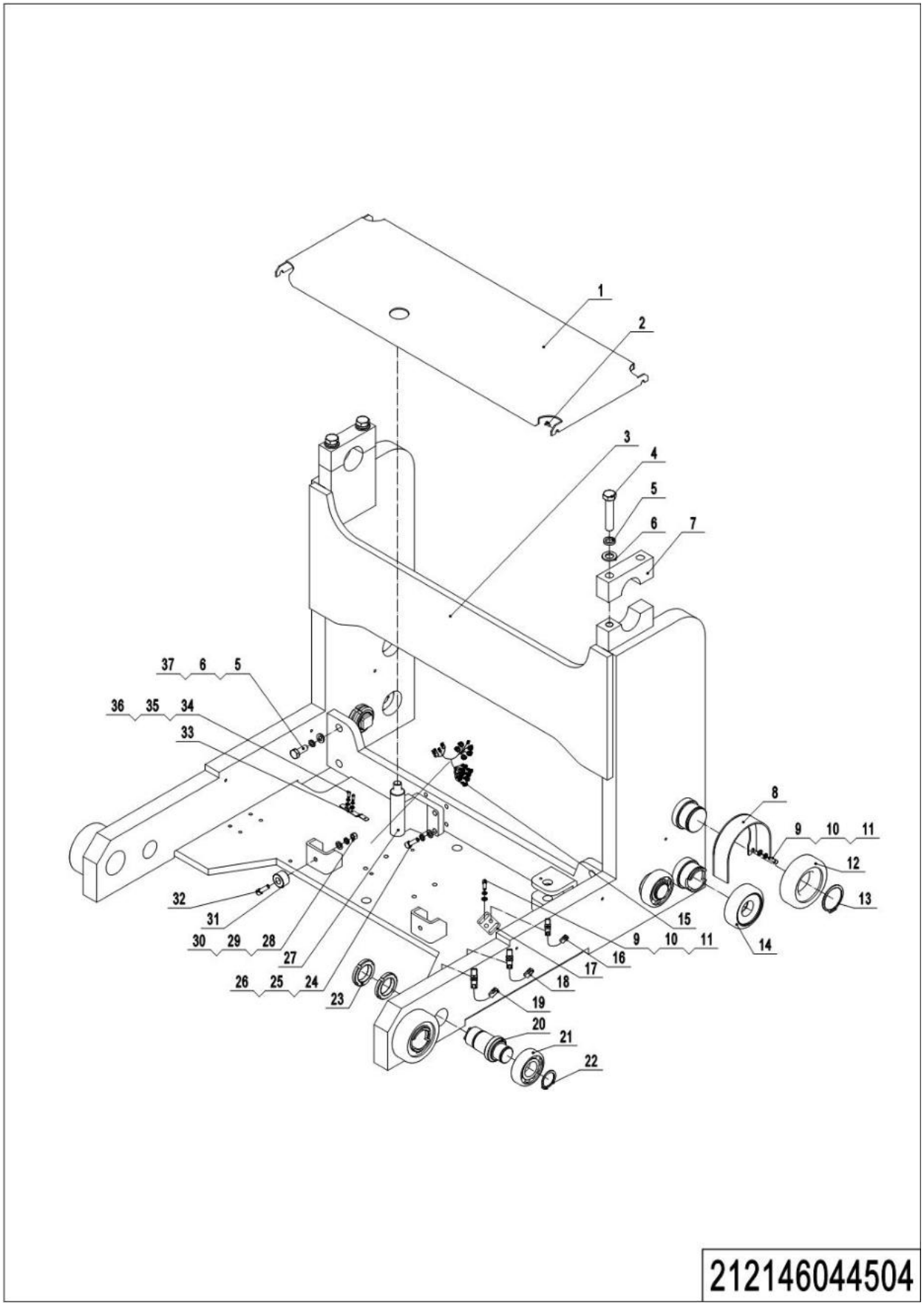

1= Supply as package. 2= Supply with constraints. 3= Phasing-out supply. 4= Supply as assembly. 5= Check other tables.

04 Reach Frame(212146044504)Continuation1

No.	Item Code	Mark	Item Description	Qty.	Substitute	Note
31	532621520062		Crash Pad	2		
32	910200200060	1	Screw	2		
33	921300300005		Holder	9		
34	910200500037	1	Screw	18		
35	910400500004	1	Spring Washer	18		
36	910400100004	1	Flat Washer	18		
37	910100200014	1	Bolt	4		

05 Fork Carriage(212146044505)

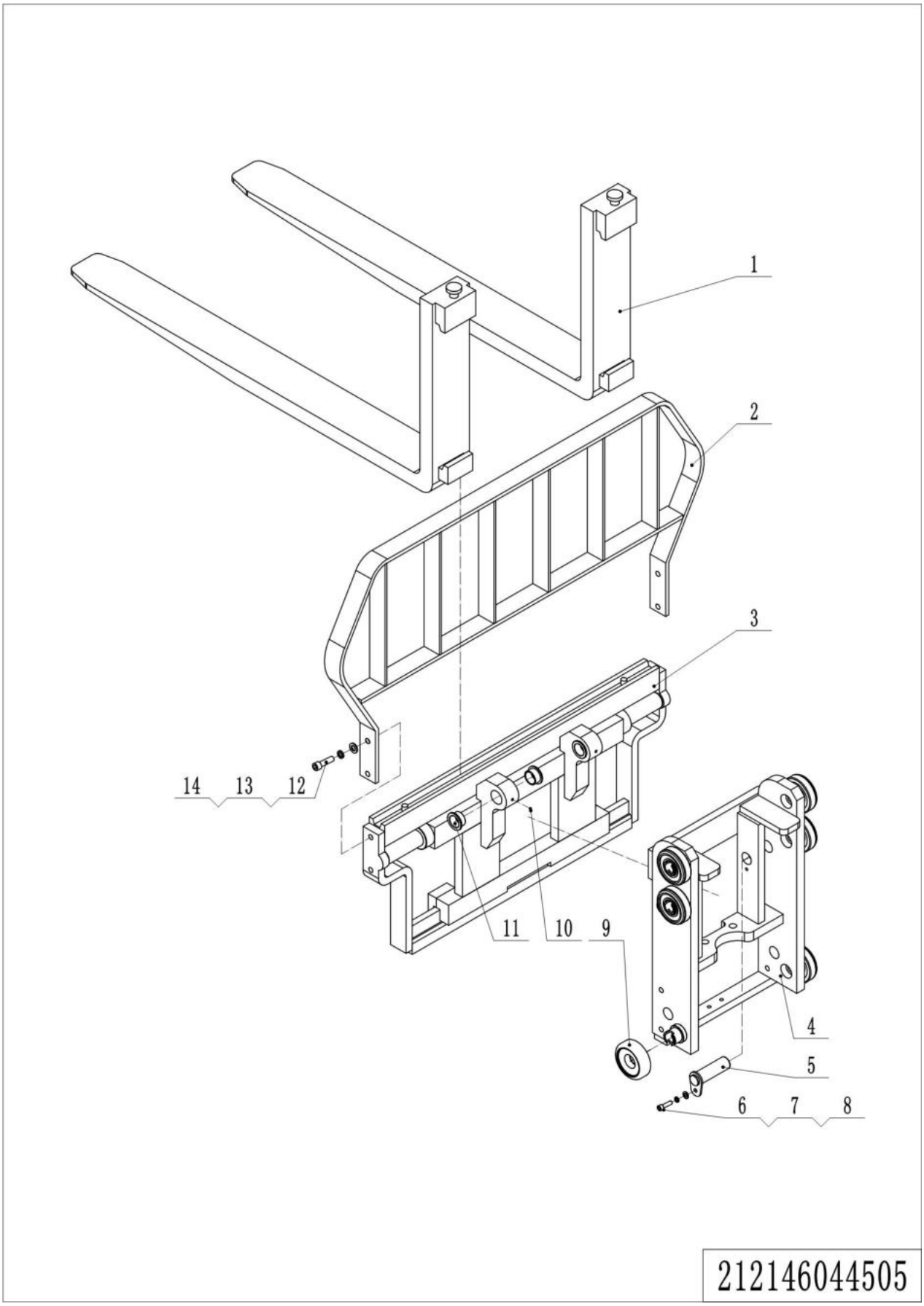

1= Supply as package. 2= Supply with constraints. 3= Phasing-out supply. 4= Supply as assembly. 5= Check other tables.

05 Fork Carriage(212146044505)

No.	Item Code	Mark	Item Description	Qty.	Substitute	Note
1	940100100001		Fork100x35x920	2		
1	940100100002		Fork100x35x950	2		
1	940100100003		Fork100x35x1070	2		
1	940100100004		Fork100x35x1150	2		
1	940100100005		Fork100x35x1220	2		
1	940100100006		Fork100x35x1370	2		
1	940100100029		Fork100x35x1520	2		
1	940100100047		Fork100x35x920-side hole	2		Wireless
1	940100100048		Fork100x35x950-side hole	2		Wireless
1	940100100049		Fork100x35x1070-side hole	2		Wireless
1	940100100050		Fork100x35x1150-side hole	2		Wireless
1	940100100051		Fork100x35x1220-side hole	2		Wireless
1	940100100053		Fork100x35x1370-side hole	2		Wireless
1	940100100054		Fork100x35x1520-side hole	2		Wireless
2	212140510000		Load Backrest	1		
3	940100200006		Side Shifter	1		
4	212138010000		Carriage	1		
5	212138010003		Pin	2		
6	910200300025	1	Screw	2		
7	910400100006	1	Flat Washer	2		
8	910400500019	1	Spring Washer	2		
9	940200300040		Compound Roller	6		
10	911200100002		Oil Cup	2		
11	940500400013		Bearing	4		
12	910100300050	1	Bolt	4		
13	910400500008	1	Spring Washer	4		
14	910400100008	1	Flat Washer	4		

1= Supply as package. 2= Supply with constraints. 3= Phasing-out supply. 4= Supply as assembly. 5= Check other tables.

06 Mast Hydraulic(212146044506)

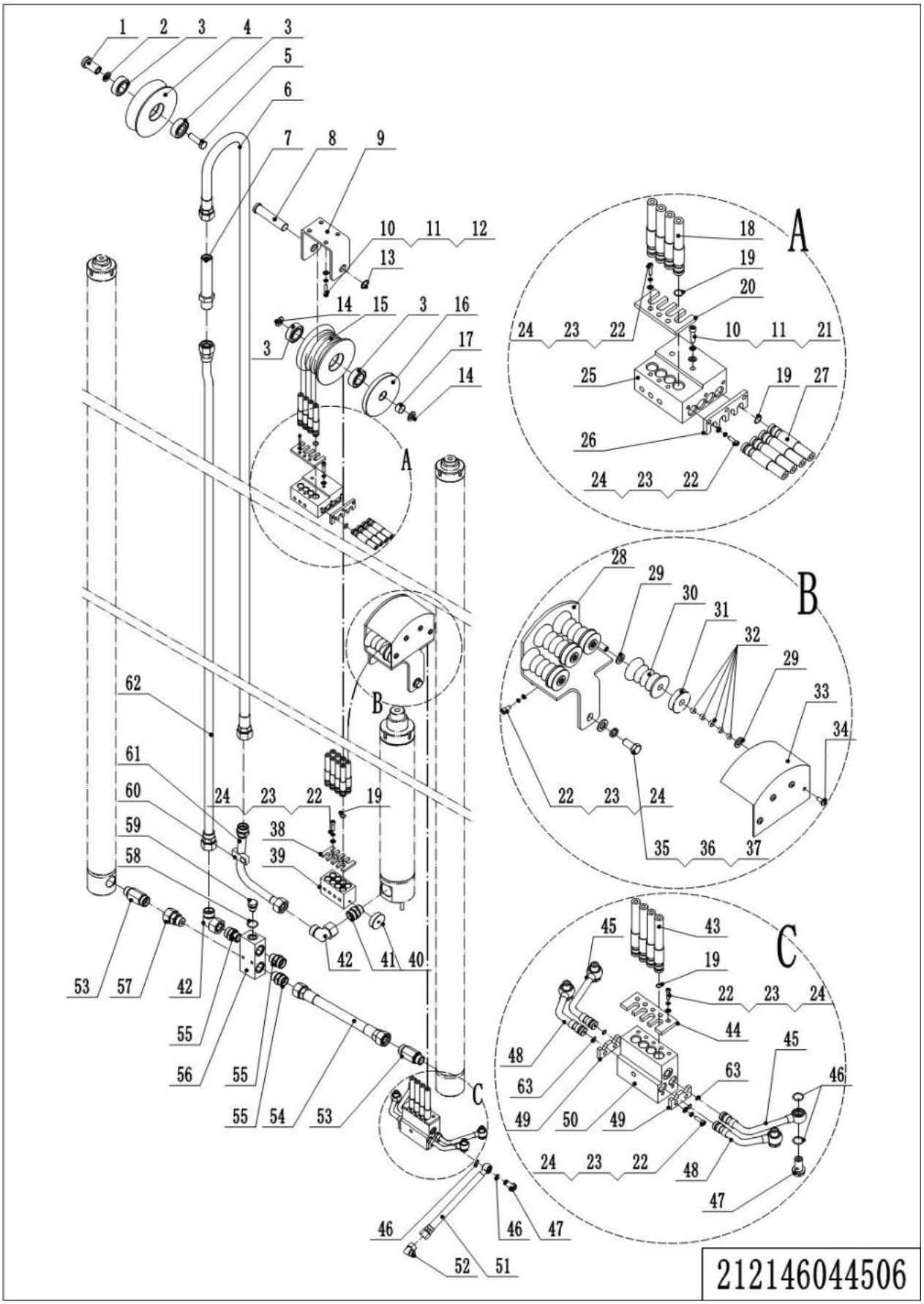

1= Supply as package. 2= Supply with constraints. 3= Phasing-out supply. 4= Supply as assembly. 5= Check other tables.

06 Mast Hydraulic(212146044506)

No.	Item Code	Mark	Item Description	Qty.	Substitute	Note
1	212144520051		Pin	1		
2	212144520052		Washer	1		
3	910700200019		Bearing	4		
4	212144520050		Pulley	1		
5	910100300057	1	Bolt	1		
6	212144520130		Hose	1		4500
6	212144520131		Hose	1		5000
6	212144520132		Hose	1		5500
6	212144520133		Hose	1		6000
6	212144520134		Hose	1		6500
6	212144520135		Hose	1		7000
6	212144520136		Hose	1		7500
6	212144520137		Hose	1		8000
6	212144520138		Hose	1		8500
6	212144520139		Hose	1		9000
6	212144520140		Hose	1		9500
7	950400500003		Joint	1		
8	212144520057		Pin	1		
9	212144520044		Mounting Base	1		
10	910400100006	1	Flat Washer	10		
11	910400500006	1	Spring Washer	15		
12	910200200058	1	Screw	13		
13	910401300011	1	Circlip	1		
14	212144520056		Washer	2		
15	212144520053		Pulley	1		
16	212144520054		Pulley	1		
17	940500100016		Bushing	1		
18	212144520100		Hose	4		4500
18	212144520101		Hose	4		5000
18	212144520102		Hose	4		5500

1= Supply as package. 2= Supply with constraints. 3= Phasing-out supply. 4= Supply as assembly. 5= Check other tables.

06 Mast Hydraulic(212146044506)Continuation1

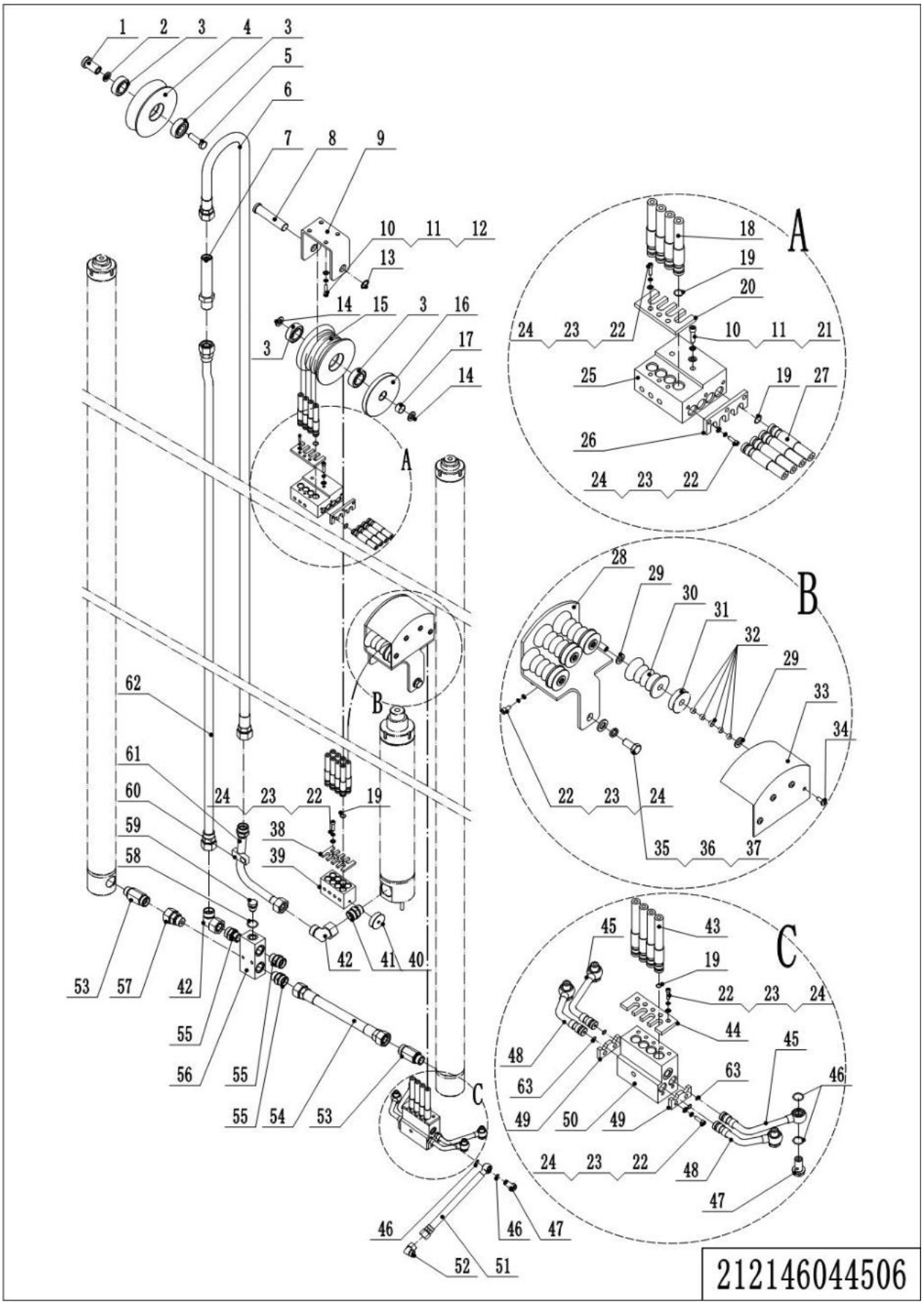

1= Supply as package. 2= Supply with constraints. 3= Phasing-out supply. 4= Supply as assembly. 5= Check other tables.

06 Mast Hydraulic(212146044506)Continuation1

No.	Item Code	Mark	Item Description	Qty.	Substitute	Note
18	212144520103		Hose	4		6000
18	212144520104		Hose	4		6500
18	212144520105		Hose	4		7000
18	212144520106		Hose	4		7500
18	212144520107		Hose	4		8000
18	212144520108		Hose	4		8500
18	212144520109		Hose	4		9000
18	212144520110		Hose	4		9500
19	910800100124		O-Ring	26		
20	212144520045		Plate	1		
21	910200200062	1	Screw	2		
22	910200200035	1	Screw	16		
23	910400500005	1	Spring Washer	16		
24	910400100005	1	Flat Washer	16		
25	212144520047		Valve Block	1		
26	212144520046		Plate	1		
27	212125020015		Hose	4		4500
27	212125020026		Hose	4		5000
27	212125020027		Hose	4		5500
27	212125020018		Hose	4		6000
27	212125020019		Hose	4		6500
27	212125020020		Hose	4		7000
27	212125020021		Hose	4		7500
27	212125020022		Hose	4		8000
27	212125020023		Hose	4		8500
27	212125020024		Hose	4		9000
27	212125020025		Hose	4		9500
28	212144510047		Wheel Casing	1		
29	910400100007	1	Flat Washer	8		
30	212144520058		Pulley	4		

1= Supply as package. 2= Supply with constraints. 3= Phasing-out supply. 4= Supply as assembly. 5= Check other tables.

06 Mast Hydraulic(212146044506)Continuation2

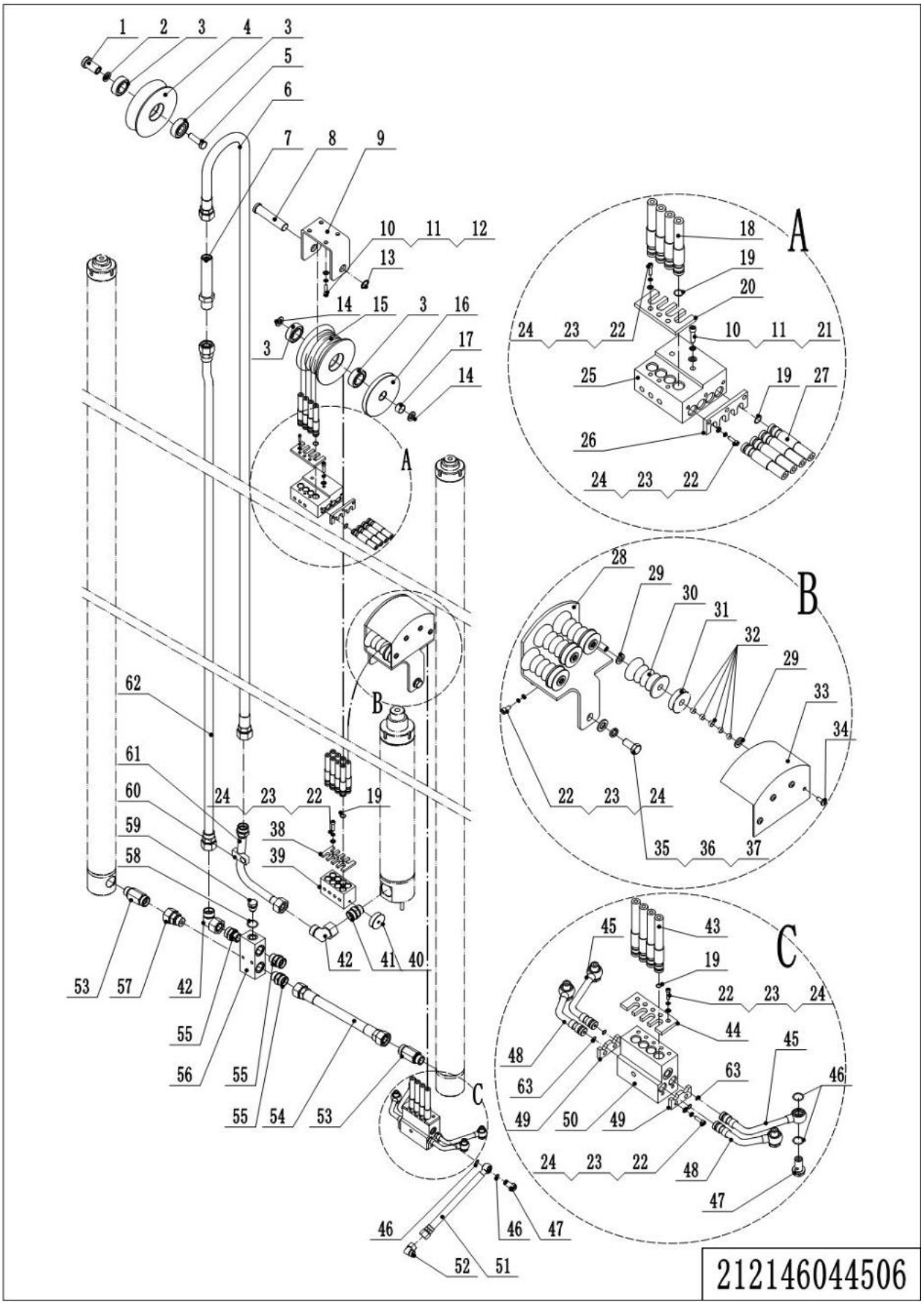

1= Supply as package. 2= Supply with constraints. 3= Phasing-out supply. 4= Supply as assembly. 5= Check other tables.

06 Mast Hydraulic4 路(212146044506)Continuation2

No.	Item Code	Mark	Item Description	Qty.	Substitute	Note
31	212144520059		Pulley	4		
32	940500100079		Bushing	20		
33	212144510046		Wheel Casing	1		
34	910200500052	1	Screw	4		
35	910100300048		Bolt	2		
36	910400500008	1	Spring Washer	3		
37	910400100008	1	Flat Washer	2		
38	212144520040		Plate	1		
39	212144520039		Valve Block	1		
40	212144520037		Pulley	1		
41	212198520036		Anti-explosion Valve	1		
42	950400200006		Joint	2		
43	212144520085		Hose	4		4500
43	212144520086		Hose	4		5000
43	212144520087		Hose	4		5500
43	212144520088		Hose	4		6000
43	212144520089		Hose	4		6500
43	212144520090		Hose	4		7000
43	212144520091		Hose	4		7500
43	212144520092		Hose	4		8000
43	212144520093		Hose	4		8500
43	212144520094		Hose	4		9000
43	212144520095		Hose	4		9500
44	212144520032		Plate	1		
45	212144520033		Steel Tube	2		
46	910800100125		O-Ring	4		
47	212144520042	1	Bolt	4		
48	212144520034		Steel Tube	2		
49	212144520031		Plate	2		
50	212144520030		Valve Block	1		

1= Supply as package. 2= Supply with constraints. 3= Phasing-out supply. 4= Supply as assembly. 5= Check other tables.

06 Mast Hydraulic(212146044506)Continuation3

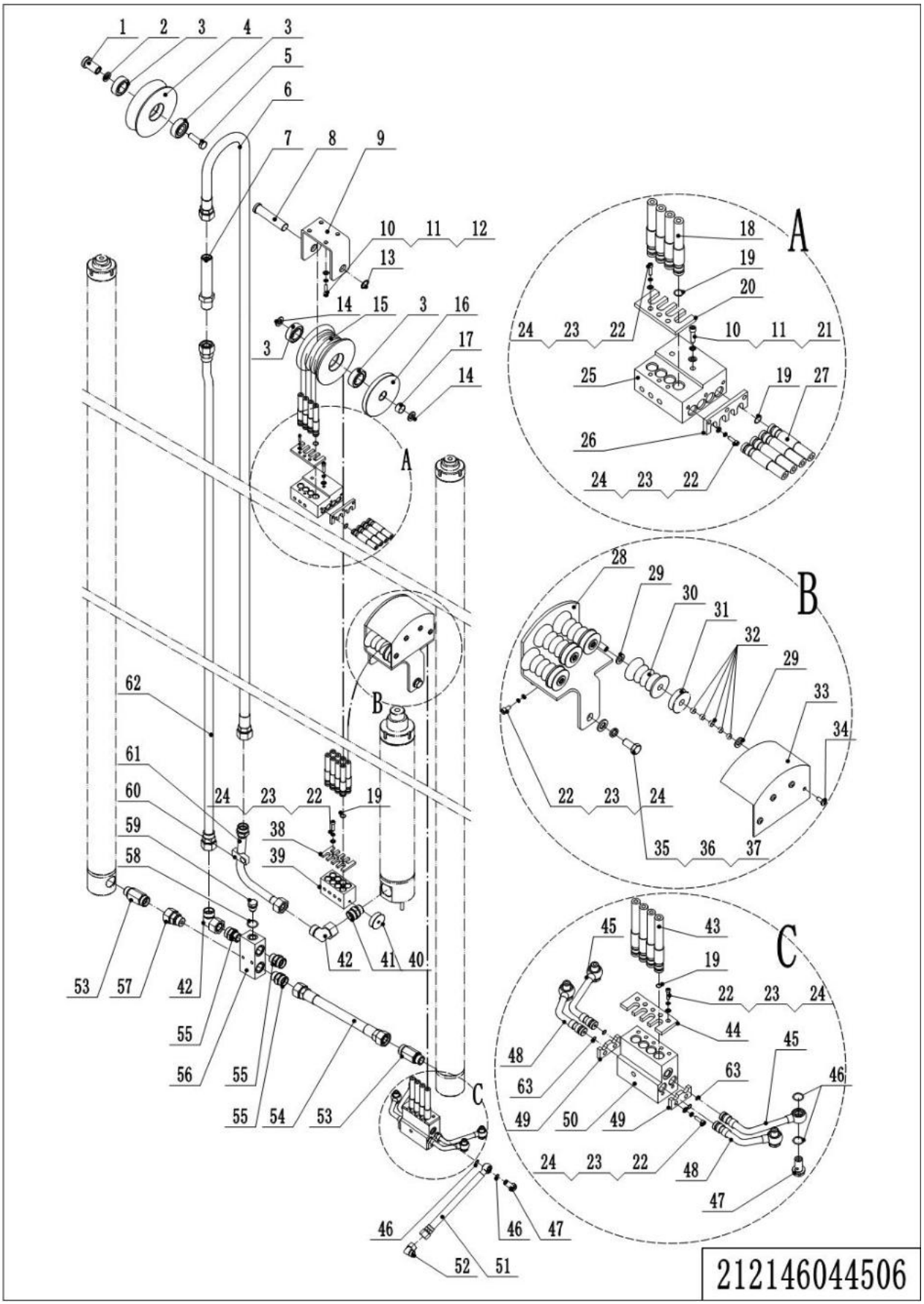

1= Supply as package. 2= Supply with constraints. 3= Phasing-out supply. 4= Supply as assembly. 5= Check other tables.

06 Mast Hydraulic(212146044506)Continuation3

No.	Item Code	Mark	Item Description	Qty.	Substitute	Note
51	212144520035		Hose	2		
52	950400200001		Joint	2		
53	212198520022		Anti-explosion Valve	2		
54	212144520036		Hose	1		
55	950400400011		Joint	3		
56	212144520041		Valve Block	1		
57	950400100003		Joint	1		
58	910800900005		Bonded Washer	1		
59	911300100001		Screw Plug	1		
60	213044520110		Pipe Clip	1		
61	212144520048		Steel Tube	1		
62	212144520115		Steel Tube	1		4500
62	212144520116		Steel Tube	1		5000
62	212144520117		Steel Tube	1		5500
62	212144520118		Steel Tube	1		6000
62	212144520119		Steel Tube	1		6500
62	212144520120		Steel Tube	1		7000
62	212144520121		Steel Tube	1		7500
62	212144520122		Steel Tube	1		8000
62	212144520123		Steel Tube	1		8500
62	212144520124		Steel Tube	1		9000
62	212144520125		Steel Tube	1		9500
63	910800100061		O-Ring	4		

1= Supply as package. 2= Supply with constraints. 3= Phasing-out supply. 4= Supply as assembly. 5= Check other tables.

Chapter 5：Steering System, Braking System, Wheels

01 Steering Wheel(212746031501)

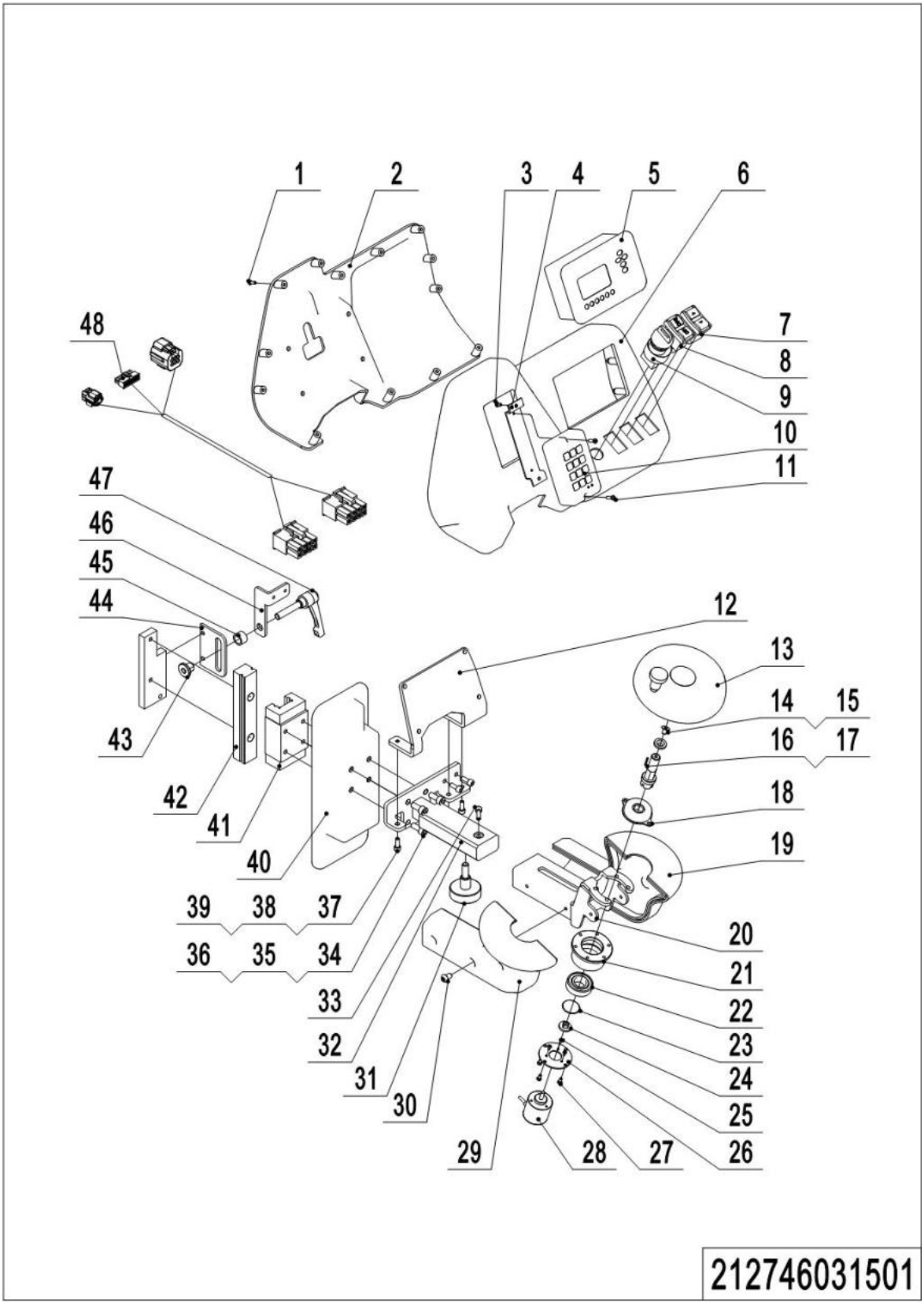

1= Supply as package. 2= Supply with constraints. 3= Phasing-out supply. 4= Supply as assembly. 5= Check other tables.

01 Steering Wheel(212746031501)

No.	Item Code	Mark	Item Description	Qty.	Substitute	Note
1	910200500024		Screw	13		
2	212731520001		Close Plate	1		
3	910200500021		Screw	2		
4	212731520011		Fixing Plate	1		
5	921100100011		Display	1		1232SE
5			Display	1		F4A
5	921100100110		Display			Inmotion
6	212731520000		Cover	1		
7	920200800040		Switch	1		
8	920200800041		Switch	1		180/360
9	212734001000		Key Switch(Li)	1		
10	920200200015		Pin-code Lock	1		
11	910200500024		Screw	2		
12	212731520003		Fixing Base	1		
13	940801700001		Handwheel	1		
14	910200400015		Screw	1		
15	212131520006		Washer	1		
16	212131520005		Axle	1		
17	910600800004		Flat Key	1		
18	271531511021		Rotary Damper	1		
19	212131520000		Protective Cover	1		
20	212131510001		Fixing Base	1		
21	212131520007		Bracket	1		
22	910700200004		Bearing	1		
23	910401400012		Circlip	1		
24	505931520002		Link Block	1		
25	910200500009		Screw	3		
26	212131520008		Fixing Plate	1		
27	910200500021		Screw	4		
28	921800200019		Potentiometer	1		
29	212131520001		Protective Cover	1		

1= Supply as package. 2= Supply with constraints. 3= Phasing-out supply. 4= Supply as assembly. 5= Check other tables.

01 Steering Wheel(212746031501)Continuation

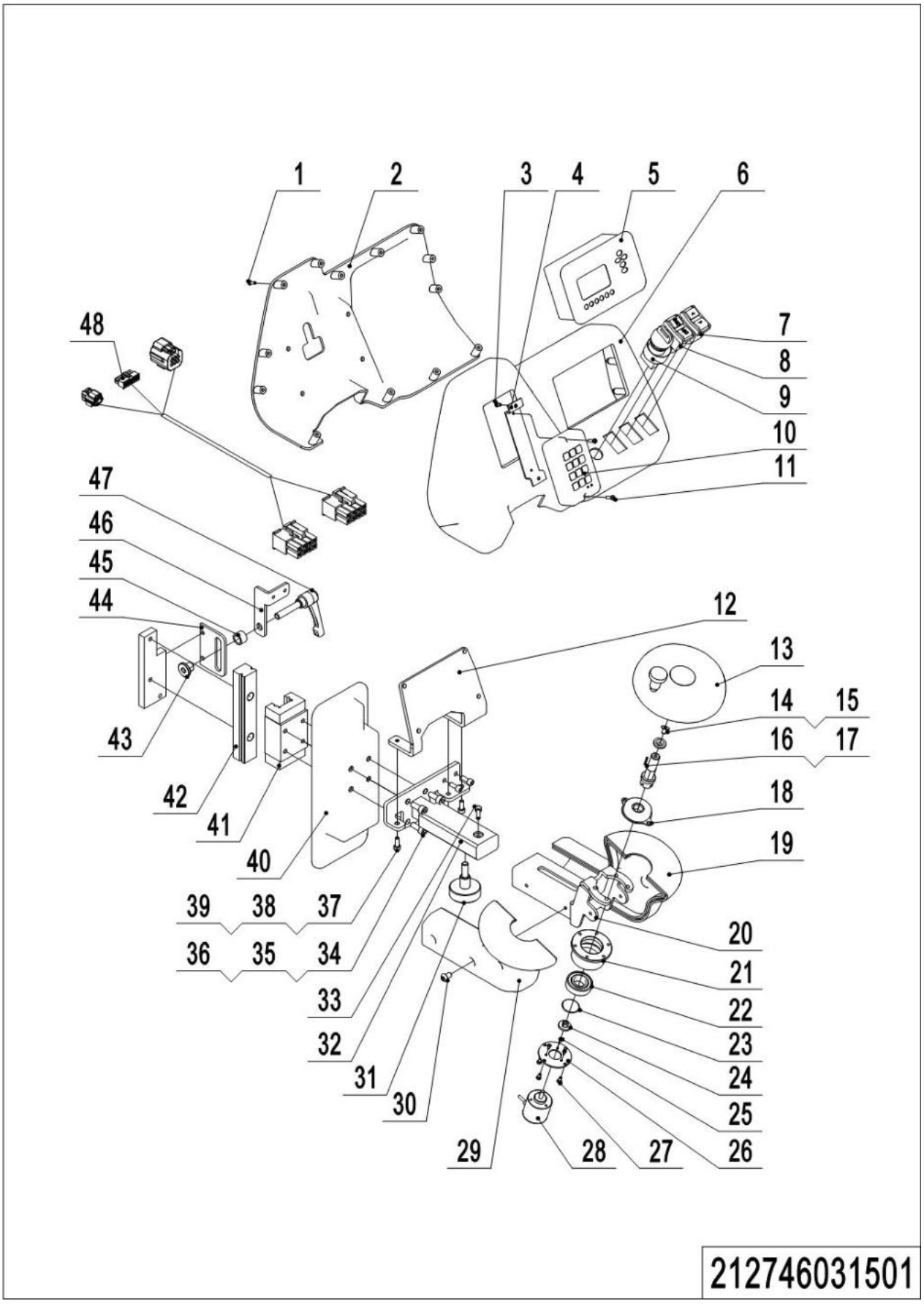

1= Supply as package. 2= Supply with constraints. 3= Phasing-out supply. 4= Supply as assembly. 5= Check other tables.

01 Steering Wheel(212746031501)Continuation

No.	Item Code	Mark	Item Description	Qty.	Substitute	Note
30	910200300017		Screw	6		
31	212731520004		Handwheel	1		
32	212731510001		Mounting Base	1		
33	910200200173		Screw	1		
34	910200200147		Screw	6		
35	910400500006		Spring Washer	6		
36	910400100006		Flat Washer	6		
37	910200200139		Screw	11		
38	910400500005		Spring Washer	11		
39	910400100005		Flat Washer	11		
40	212731520002		Cover	1		
41	212798520000		Pedestal	1		
42	212798520001		Guide Rail	1		
43	212731520008		Barrel	1		
44	212731520007		Fixing Plate	1		
45	212731520006		Spacer Bush	1		
46	212731520005		Fixing Plate	1		
47	271531510006		Handle	1		
48	212733010001		Wiring Harness	1		Curtis
48	212733010101		Wiring Harness(Inmotion+Li)	1		Inmotion

1= Supply as package. 2= Supply with constraints. 3= Phasing-out supply. 4= Supply as assembly. 5= Check other tables.

02 Brake Unit(212146011501)

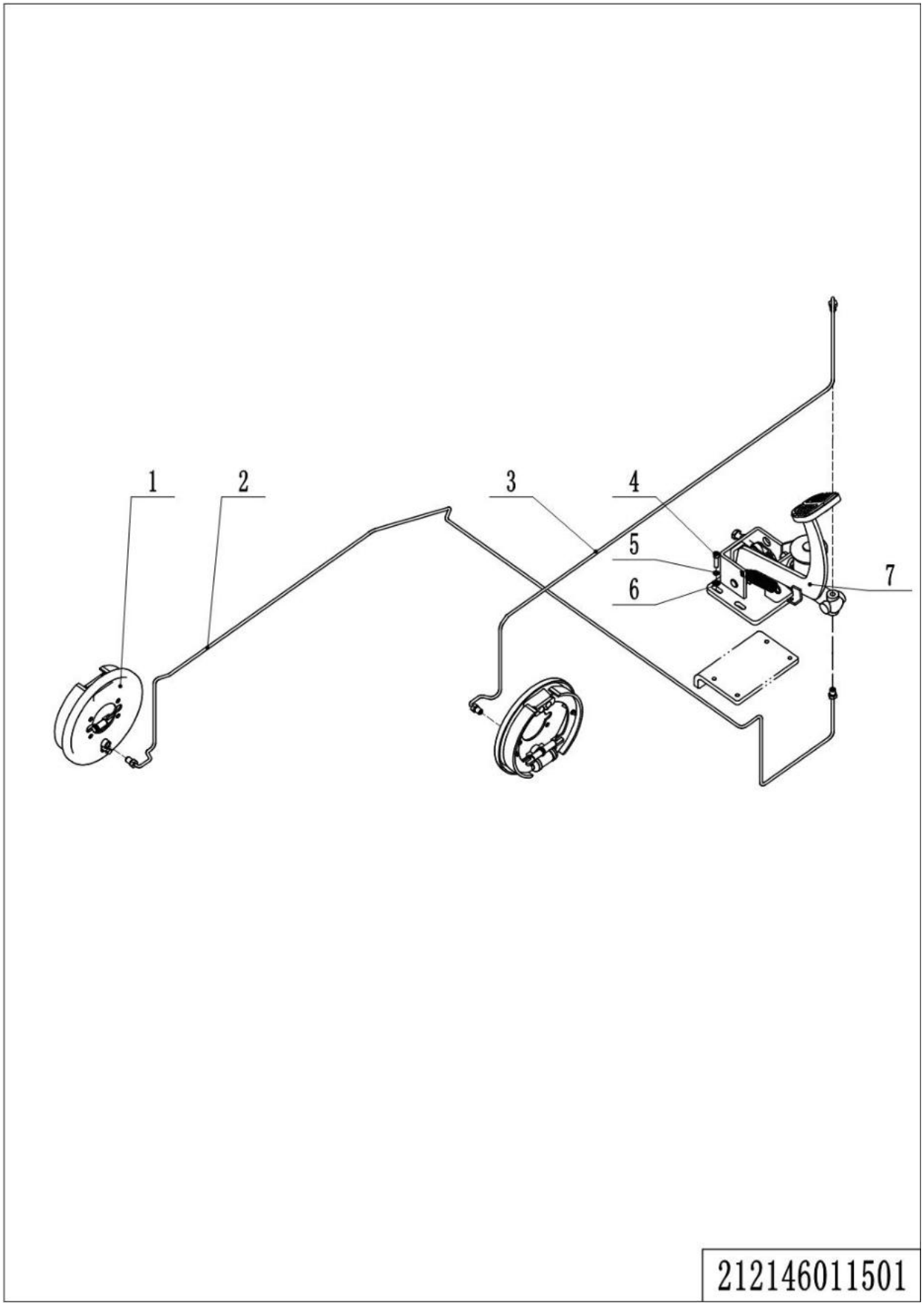

1= Supply as package. 2= Supply with constraints. 3= Phasing-out supply. 4= Supply as assembly. 5= Check other tables.

02 Brake Unit(212146011501)

No.	Item Code	Mark	Item Description	Qty.	Substitute	Note
1	940700200004		Brake	2		
2	212111510005		Steel Tube	1		
3	212111510004		Steel Tube	1		
4	910200200058	1	Screw	4		
5	910400500006	1	Spring Washer	4		
6	910400100006	1	Flat Washer	4		
7	212111510000		Foot Brake Assembly	1		212146011502

1= Supply as package. 2= Supply with constraints. 3= Phasing-out supply. 4= Supply as assembly. 5= Check other tables.

03 Brake Pedal(212146011502)

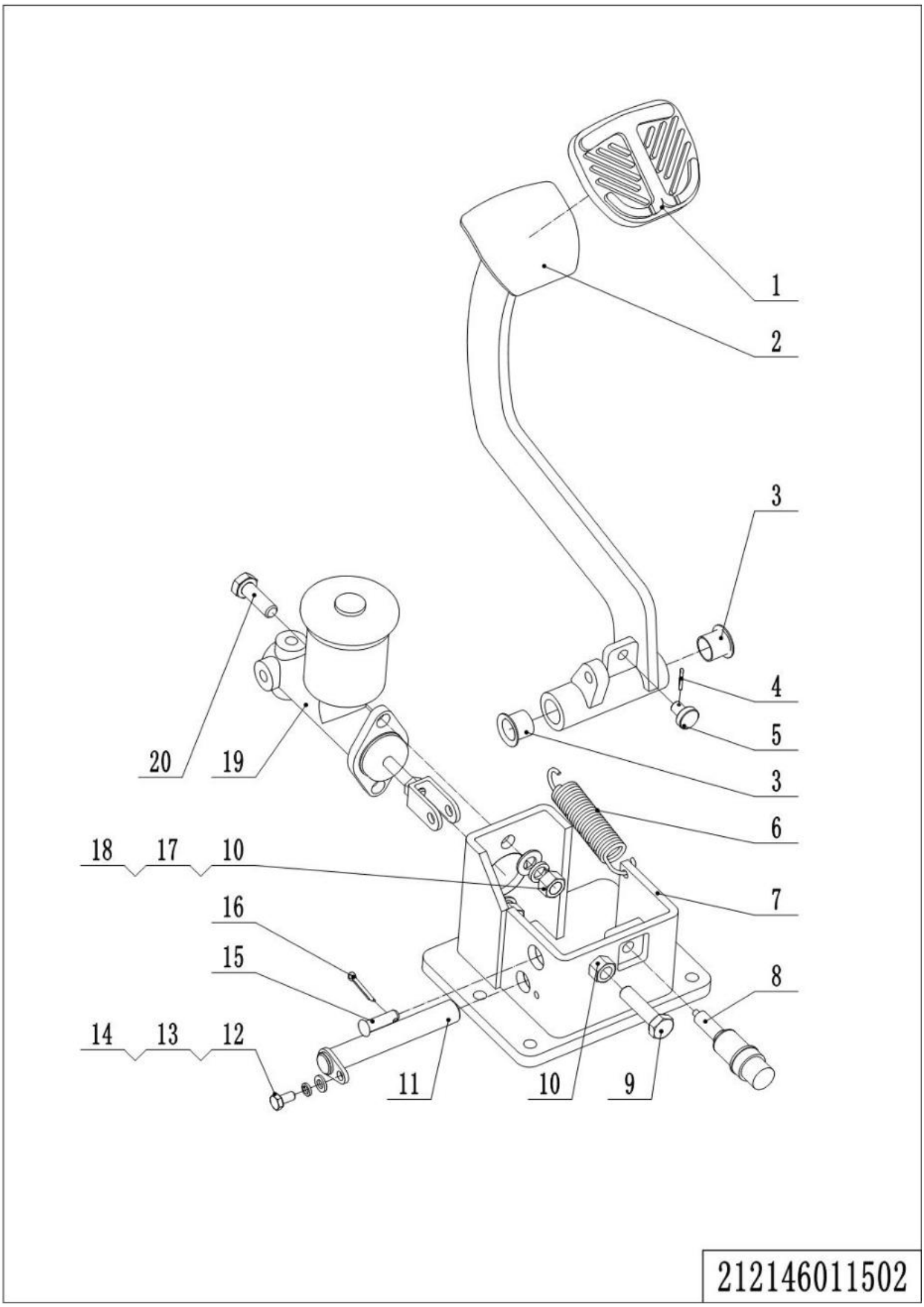

1= Supply as package. 2= Supply with constraints. 3= Phasing-out supply. 4= Supply as assembly. 5= Check other tables.

03 Brake Pedal(212146011502)

No.	Item Code	Mark	Item Description	Qty.	Substitute	Note
1	253511520010		Rubber Mat	1		
2	212111510003		Platform	1		
3	940500200016		Bushing	2		
4	910600600011		Cotter Pin	1		
5	251011520015		Crash Pad	1		
6	275211521013		Spring	1		
7	212111510001		Bracket	1		
8	920201000002		Switch	1		
9	910100300039	1	Bolt	1		
10	910300100007	1	Nut	3		
11	212111510002		Pin	1		
12	910400100005	1	Flat Washer	1		
13	910400500005	1	Spring Washer	1		
14	910100300009	1	Bolt	1		
15	910600700026		Pin	1		
16	910600600026		Cotter Pin	1		
17	910400100007	1	Flat Washer	2		
18	910400500007	1	Spring Washer	2		
19	212111510006		Brake Pump	1		
20	910100300037	1	Bolt	2		

1= Supply as package. 2= Supply with constraints. 3= Phasing-out supply. 4= Supply as assembly. 5= Check other tables.

04 Load Wheel(212146017001)

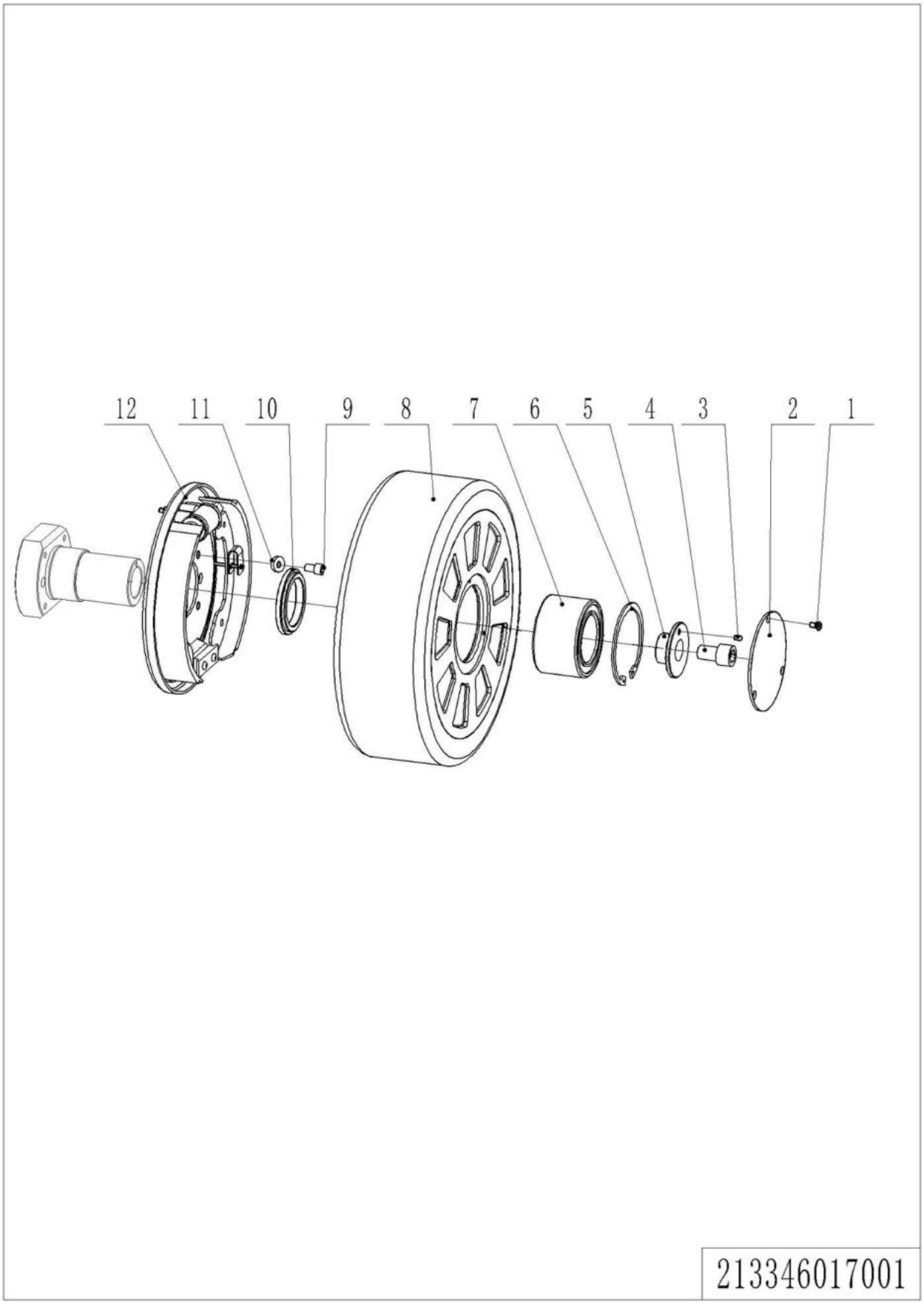

1= Supply as package. 2= Supply with constraints. 3= Phasing-out supply. 4= Supply as assembly. 5= Check other tables.

04 Load Wheel(212146017001)

No.	Item Code	Mark	Item Description	Qty.	Substitute	Note
1	910200600016	1	Screw	3		
2	212117020000		Close Plate	1		
3	910600100009		Cylindrical Pin	1		
4	910202500001	1	Screw	1		
5	212117020002		Press Cover	1		
6	910401400024	1	Circlip	1		
7	941101000005		Bearing	1		
8	940300300034		WheelΦ285x110	1		
9	910100300022	1	Bolt	4		
10	212117020001	1	Washer	1		
11	910400100006	1	Flat Washer	4		
12	940700200004		Brake	2		

1= Supply as package. 2= Supply with constraints. 3= Phasing-out supply. 4= Supply as assembly. 5= Check other tables.

Chapter 6：Electrical Parts

01 Steering Wheel(212746033003)

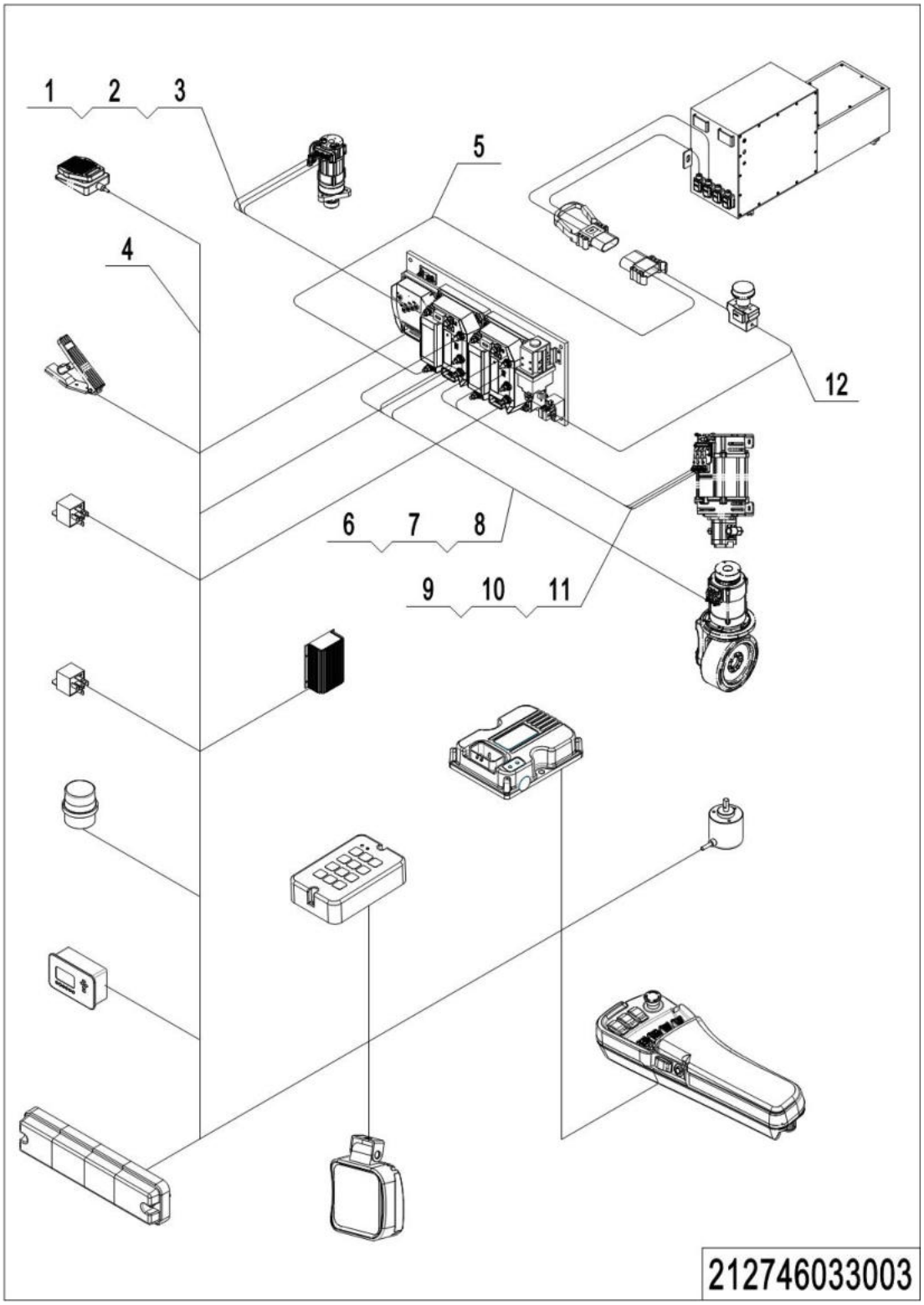

1= Supply as package. 2= Supply with constraints. 3= Phasing-out supply. 4= Supply as assembly. 5= Check other tables.

01 Steering Wheel(Inmotion)(212746033003)

No.	Item Code	Mark	Item Description	Qty.	Substitute	Note
1	212733010011		Cables	1		
2	212733010012		Cables	1		
3	212733010013		Cables	1		
4	212733010100		Wiring Harness	1		Inmotion
4	212733010000		Wiring Harness	1		1232SE/F4A
5	212733010016		Wiring Harness	1		
6	212733010005		Cables	1		
7	212733010006		Cables	1		
8	212733010007		Cables	1		
9	212733010008		Cables	1		
10	212733010009		Cables	1		
11	212733010010		Cables	1		
12	212733010014		Cables	1		

1= Supply as package. 2= Supply with constraints. 3= Phasing-out supply. 4= Supply as assembly. 5= Check other tables.

02 Controller(Curtis 1232SE)(212746033002)

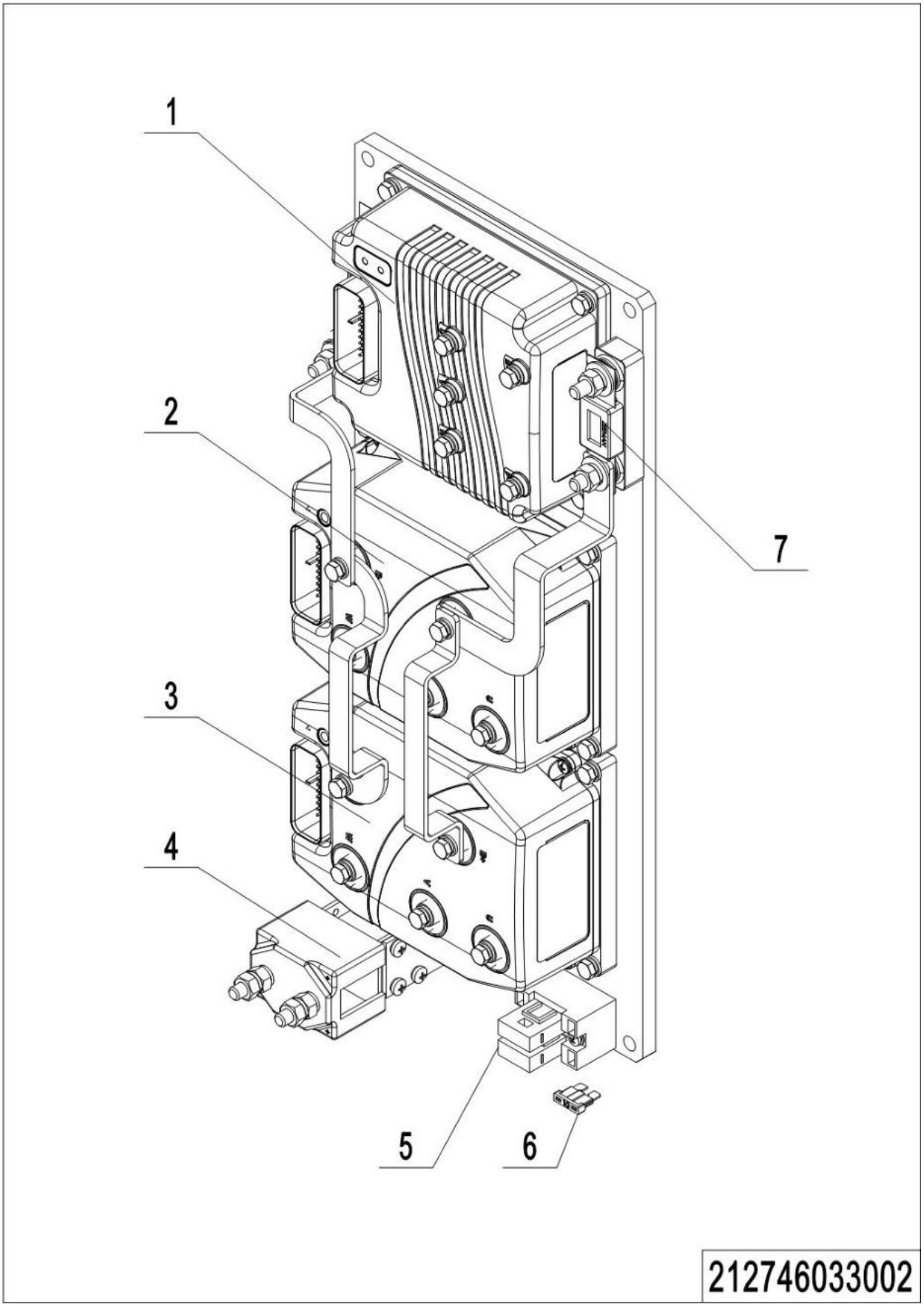

1= Supply as package. 2= Supply with constraints. 3= Phasing-out supply. 4= Supply as assembly. 5= Check other tables.

02 **Controller(Curtis 1232SE)(212746033002)**

No.	Item Code	Mark	Item Description	Qty.	Substitute	Note
1	921400100004		Controller	1		
2	921400100043		Controller	1		
3	921400100043		Controller	1		
4	920700100008		Contactor	1		
5	920100400005		Fuse Holder	1		
6	920100200002		Fuse	1		
7	920100100014		Fuse	1		

1= Supply as package. 2= Supply with constraints. 3= Phasing-out supply. 4= Supply as assembly. 5= Check other tables.

03 Controller(Curtis F4A)(212746033005)

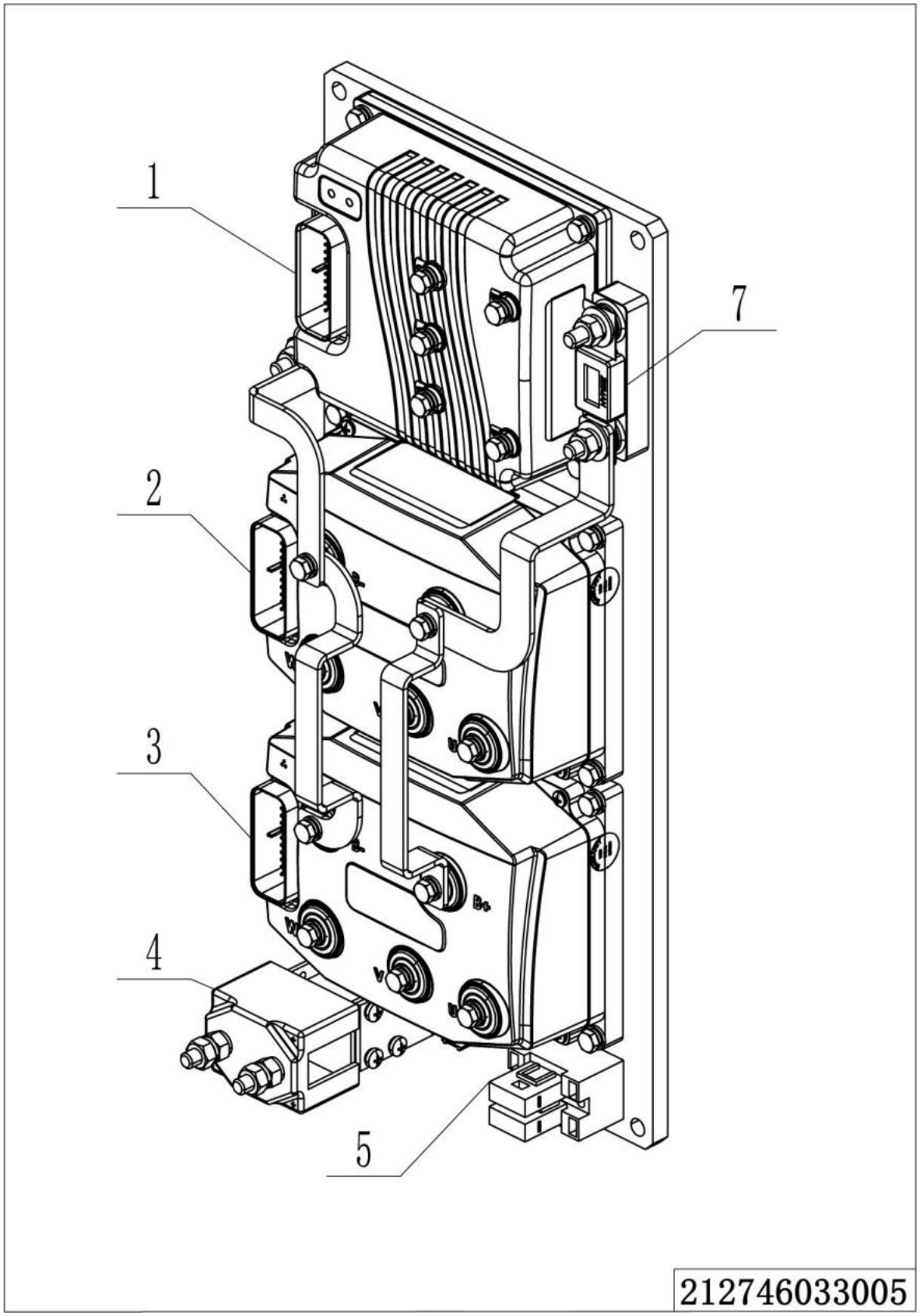

1= Supply as package. 2= Supply with constraints. 3= Phasing-out supply. 4= Supply as assembly. 5= Check other tables.

03 **Controller(Curtis F4A)(212746033005)**

No.	Item Code	Mark	Item Description	Qty.	Substitute	Note
1	921400100004		Controller	1		
2	921400100156		Controller	1		
3	921400100156		Controller	1		
4	920700100008		Contactor	1		
5	920100400004		Fuse Holder	1		
6	920100200002		Fuse	1		
7	920100100014		Fuse	1		

04 Controller(Inmotion)(212746033004)

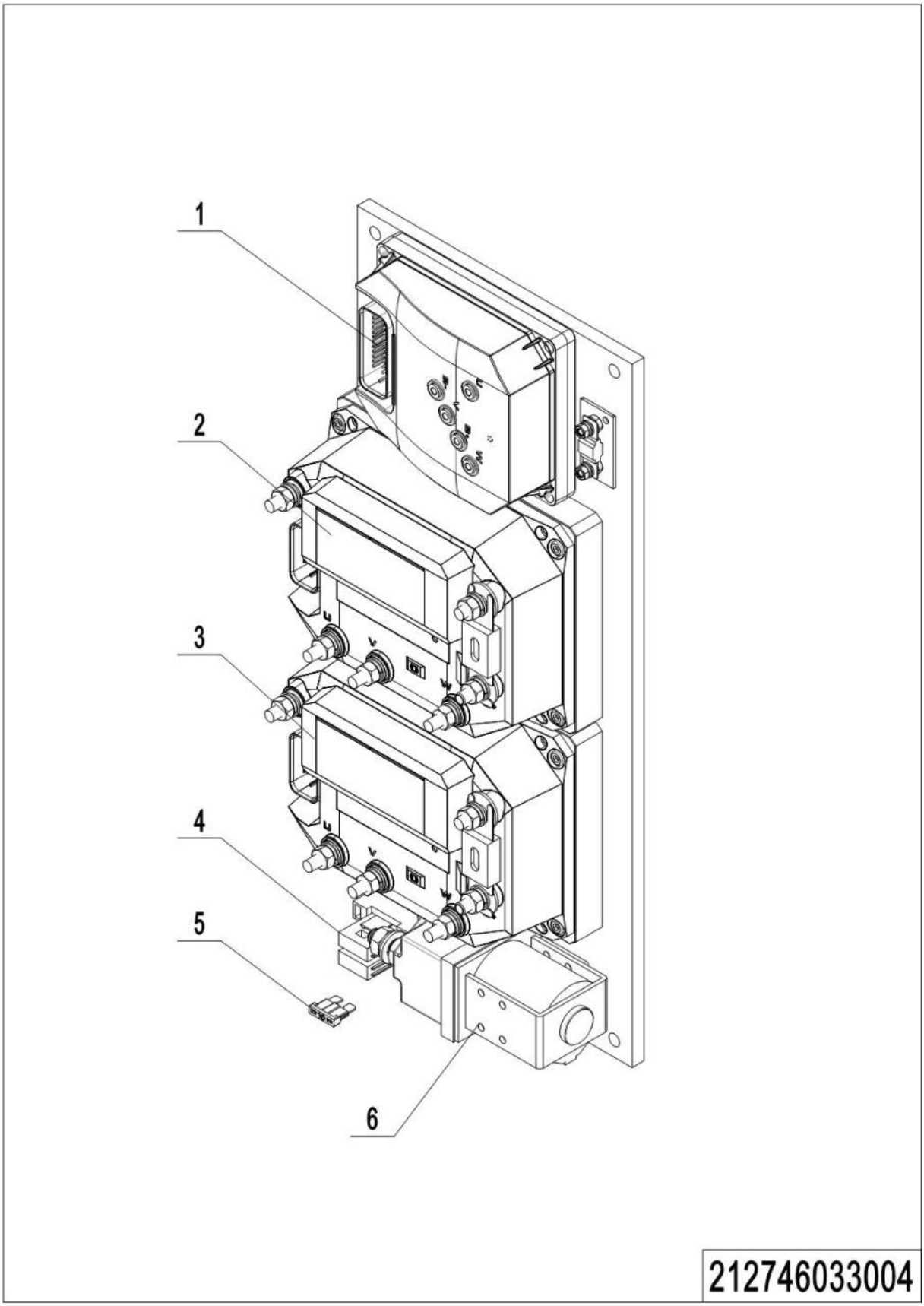

1= Supply as package. 2= Supply with constraints. 3= Phasing-out supply. 4= Supply as assembly. 5= Check other tables.

04 **Controller(Curtis)(212746033004)**

No.	Item Code	Mark	Item Description	Qty.	Substitute	Note
1	921400100165		Controller	1		
2	921400100069		Controller	1		
3	921400100069		Controller	1		
4	920100400005		Fuse Holder	1		
5	920100200002		Fuse	1		
6	920700100029		Relay	1		

1= Supply as package. 2= Supply with constraints. 3= Phasing-out supply. 4= Supply as assembly. 5= Check other tables.

05 Charger(212746036501)

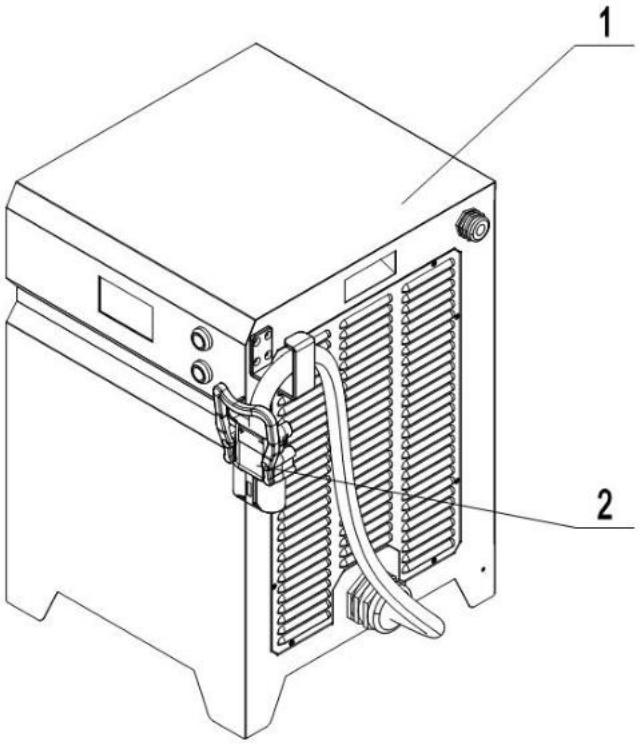

212746036501

1= Supply as package. 2= Supply with constraints. 3= Phasing-out supply. 4= Supply as assembly. 5= Check other tables.

05 Charger(212746036501)

No.	Item Code	Mark	Item Description	Qty.	Substitute	Note
1	921000200401		Charger 48V200A (Aisa-CHN)	1		
1	921000200481		Charger 48V200A (EU)	1		
2	920400100037		Connector	1		

06 Battery(212746037001)

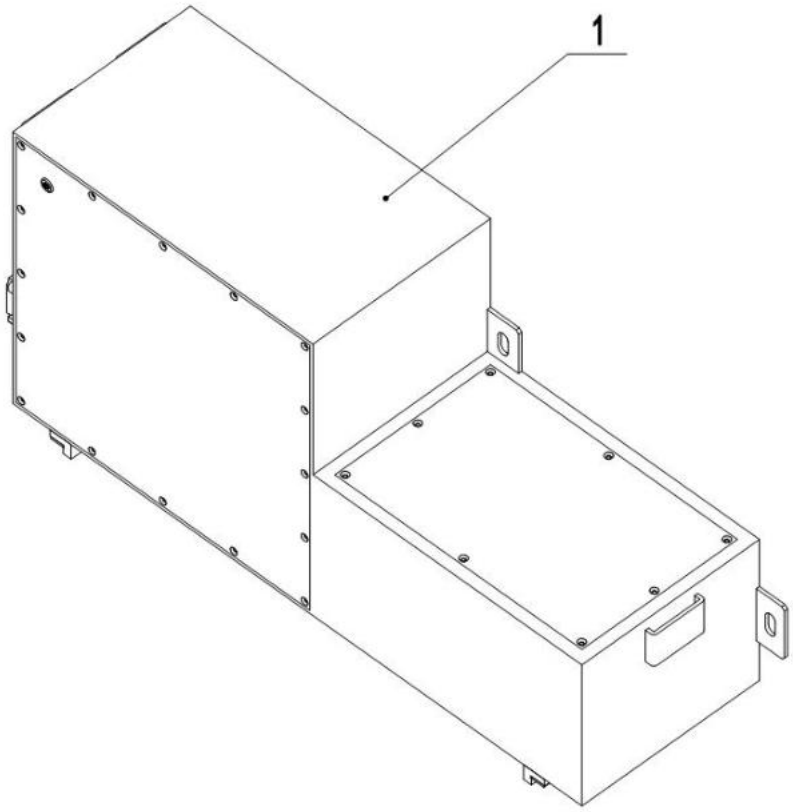

212746037001

1= Supply as package. 2= Supply with constraints. 3= Phasing-out supply. 4= Supply as assembly. 5= Check other tables.

06 Battery(212746037001)

No.	Item Code	Mark	Item Description	Qty.	Substitute	Note
1	212737010000		Li Battery48V350Ah	1		
1	920600100417		Li Battery48V350Ah	1		

1= Supply as package. 2= Supply with constraints. 3= Phasing-out supply. 4= Supply as assembly. 5= Check other tables.

Chapter 7：Special Parts

01 Monitor(212146036001)

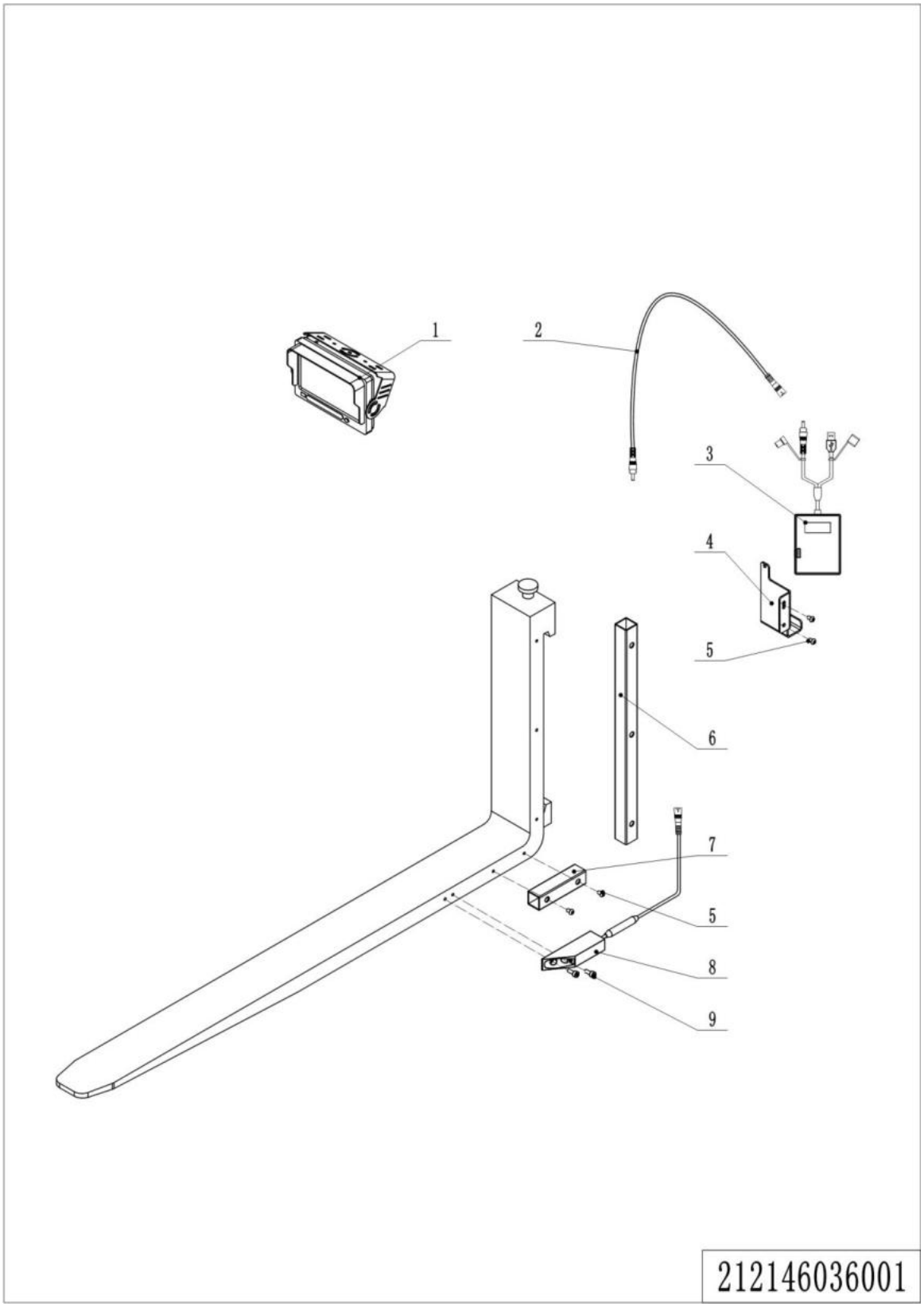

1= Supply as package. 2= Supply with constraints. 3= Phasing-out supply. 4= Supply as assembly. 5= Check other tables.

01 Monitor(212146036001)

No.	Item Code	Mark	Item Description	Qty.	Substitute	Note
1	921100100058		Display	1		
2	921500100110		Wire	1		
3	920600100384		Li Battery3.7V30000mAh	1		
4	212136020010		Mounting Bracket	1		
5	910200300017	1	Screw	7		
6	212136020002		Conduit	1		
7	212136020001		Conduit	1		
8	921100100059		Camera	1		
9	910200200033	1	Screw	2		

1= Supply as package. 2= Supply with constraints. 3= Phasing-out supply. 4= Supply as assembly. 5= Check other tables.

02 Monitor(Wireless)(212746036001)

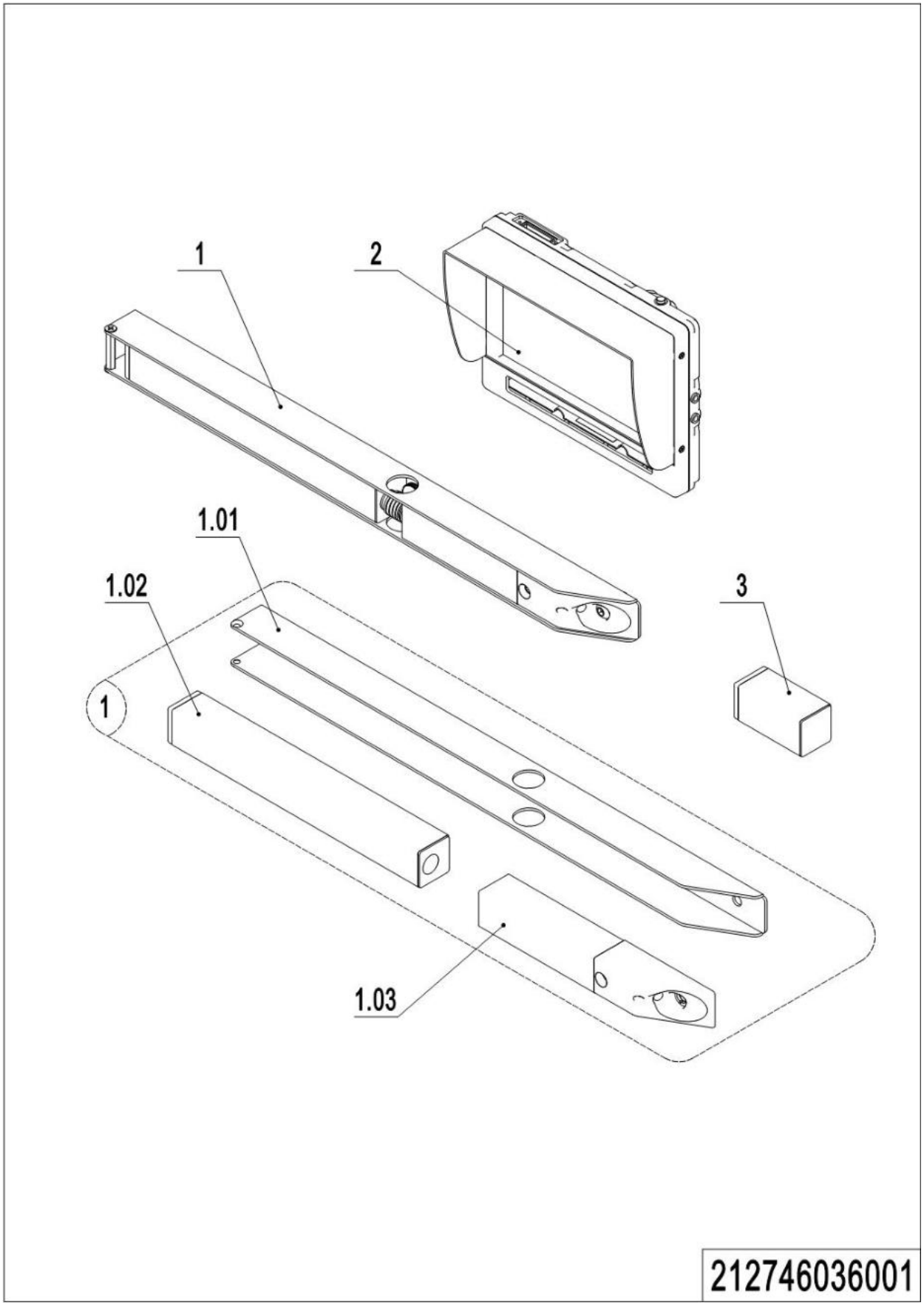

1= Supply as package. 2= Supply with constraints. 3= Phasing-out supply. 4= Supply as assembly. 5= Check other tables.

02 Monitor(Wireless)(212746036001)

No.	Item Code	Mark	Item Description	Qty.	Substitute	Note
1	922200100036		Camera Assembly	1		
1.01	212798510010		Fixing Mount	1		
1.02	920600100234		Li Battery12V6800mAh	1		
1.03	921100100103		Wireless Camera	1		
2	921100100102		Display	1		
3	921000200624		Charger12.6V2A	1		ASIA
3	921000200653		Charger	1		US
3	921000200654		Charger	1		AUS/ARG
3	921000200655		Charger	1		ITL
3	921000200656		Charger	1		ENG
3	921000200657		Charger	1		BRA
3	921000200658		Charger	1		ISR
3	921000200659		Charger	1		ZA
3	921000200660		Charger	1		IND
3	921000200661		Charger	1		EU

1= Supply as package. 2= Supply with constraints. 3= Phasing-out supply. 4= Supply as assembly. 5= Check other tables.

03 Monitor(Wired power) (213346036002)

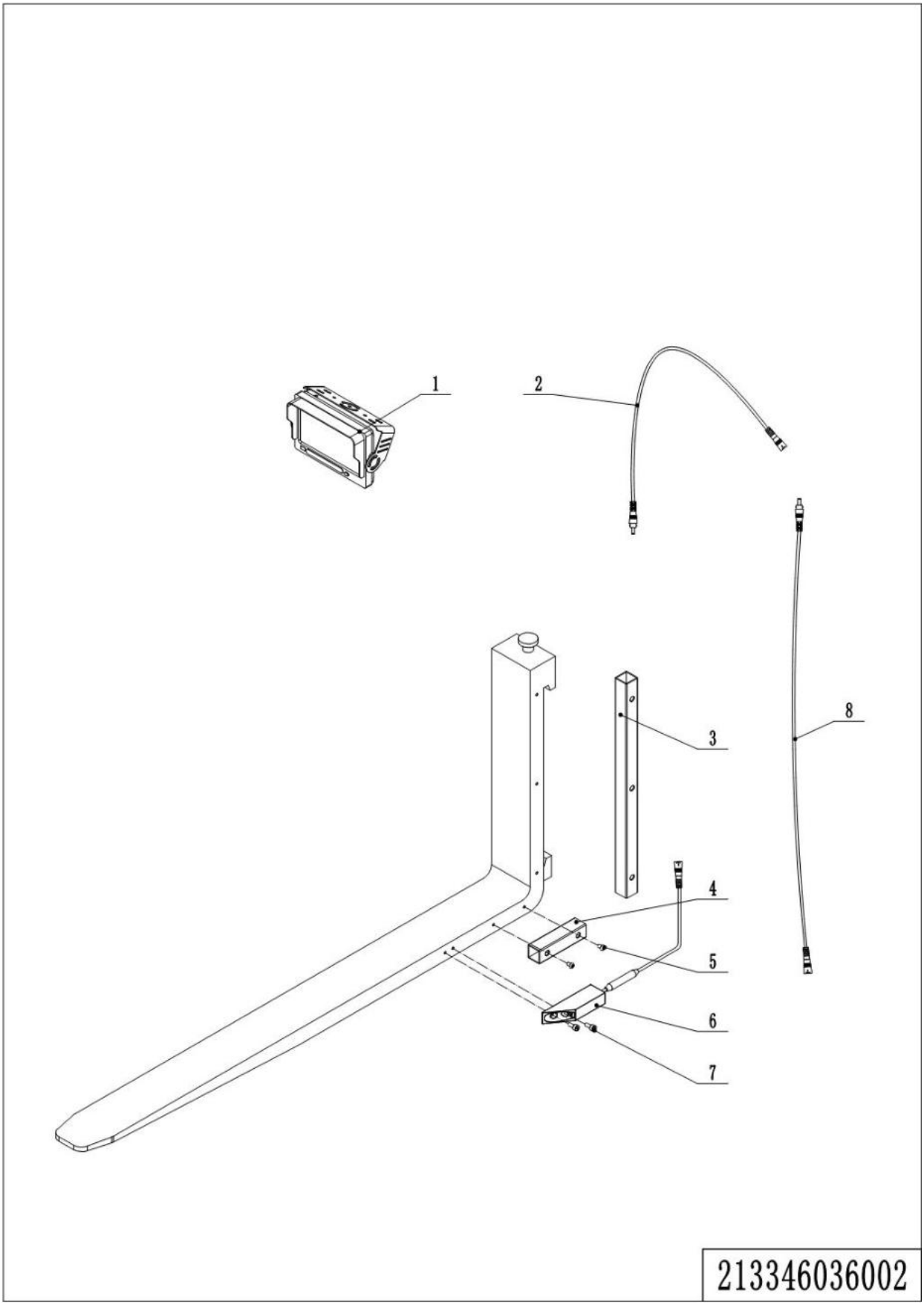

1= Supply as package. 2= Supply with constraints. 3= Phasing-out supply. 4= Supply as assembly. 5= Check other tables.

02 Monitor(Wired power) (213346036002)

No.	Item Code	Mark	Item Description	Qty.	Substitute	Note
1	921100100058		Display	1		
2	921500100110		Wire	1		
3	212136020002		Conduit	1		
4	212136020001		Conduit	1		
5	910200300017		Screw	7		
6	921100100059		Camera	1		
7	910200200033		Screw	2		
8	/		Wire	1		

Chapter 8：Others

01 Integrated Control Console(212746010001)

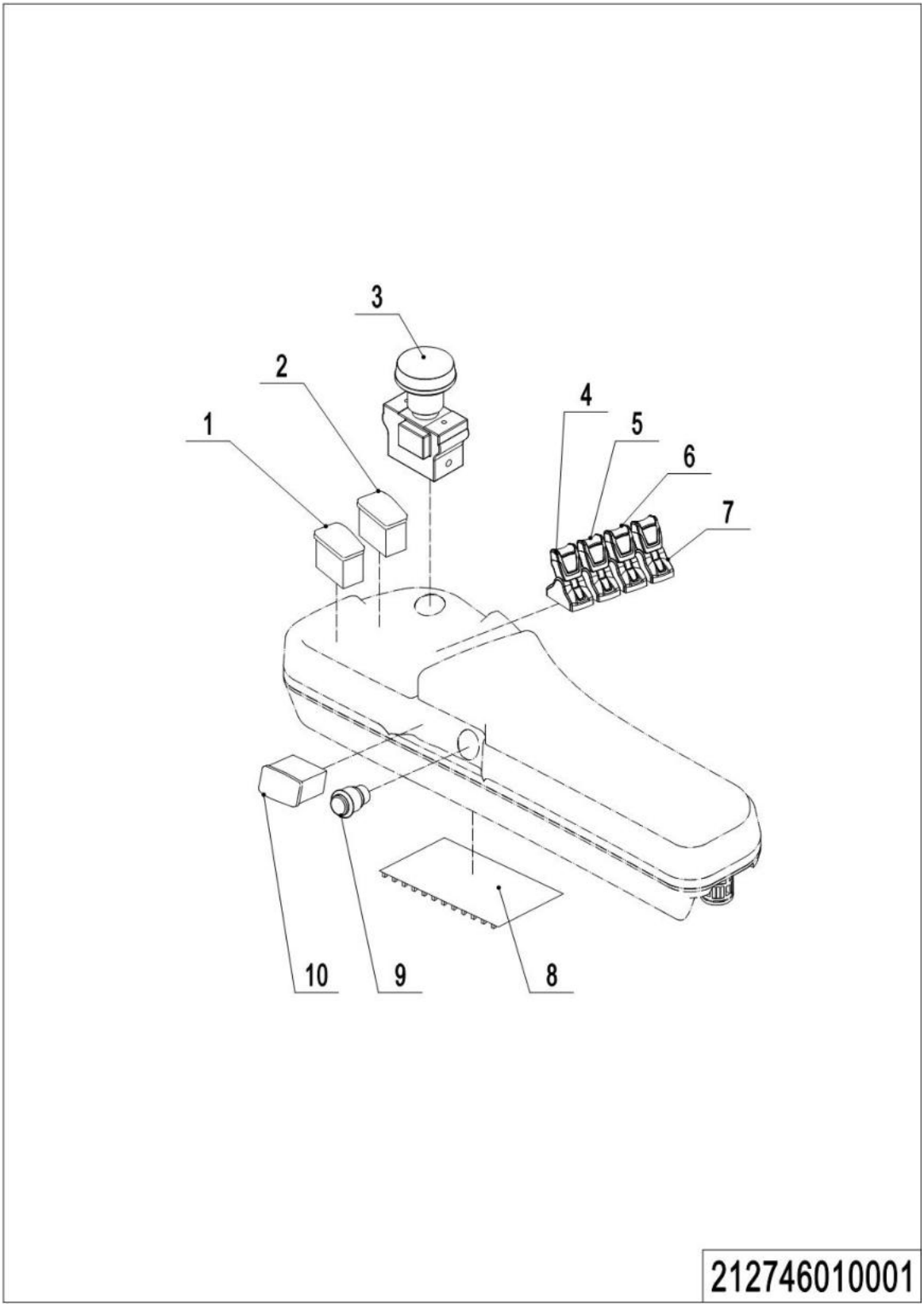

1= Supply as package. 2= Supply with constraints. 3= Phasing-out supply. 4= Supply as assembly. 5= Check other tables.

01 Integrated Control Console(212746010001)

No.	Item Code	Mark	Item Description	Qty.	Substitute	Note
1	212798510002		Switch	1		
2	212798510001		Switch	1		
3	212798510000		Button	1		
4	212798510006		Switch	1		
5	212798510005		Switch	1		
6	212798510004		Switch	1		
7	212798510003		Switch	1		
8	212798510009		Sampling Board	1		
9	212798510008		Horn Button	1		
10	212798510007		Switch	1		

1= Supply as package. 2= Supply with constraints. 3= Phasing-out supply. 4= Supply as assembly. 5= Check other tables.

02 Labels and Decals(212746047002)

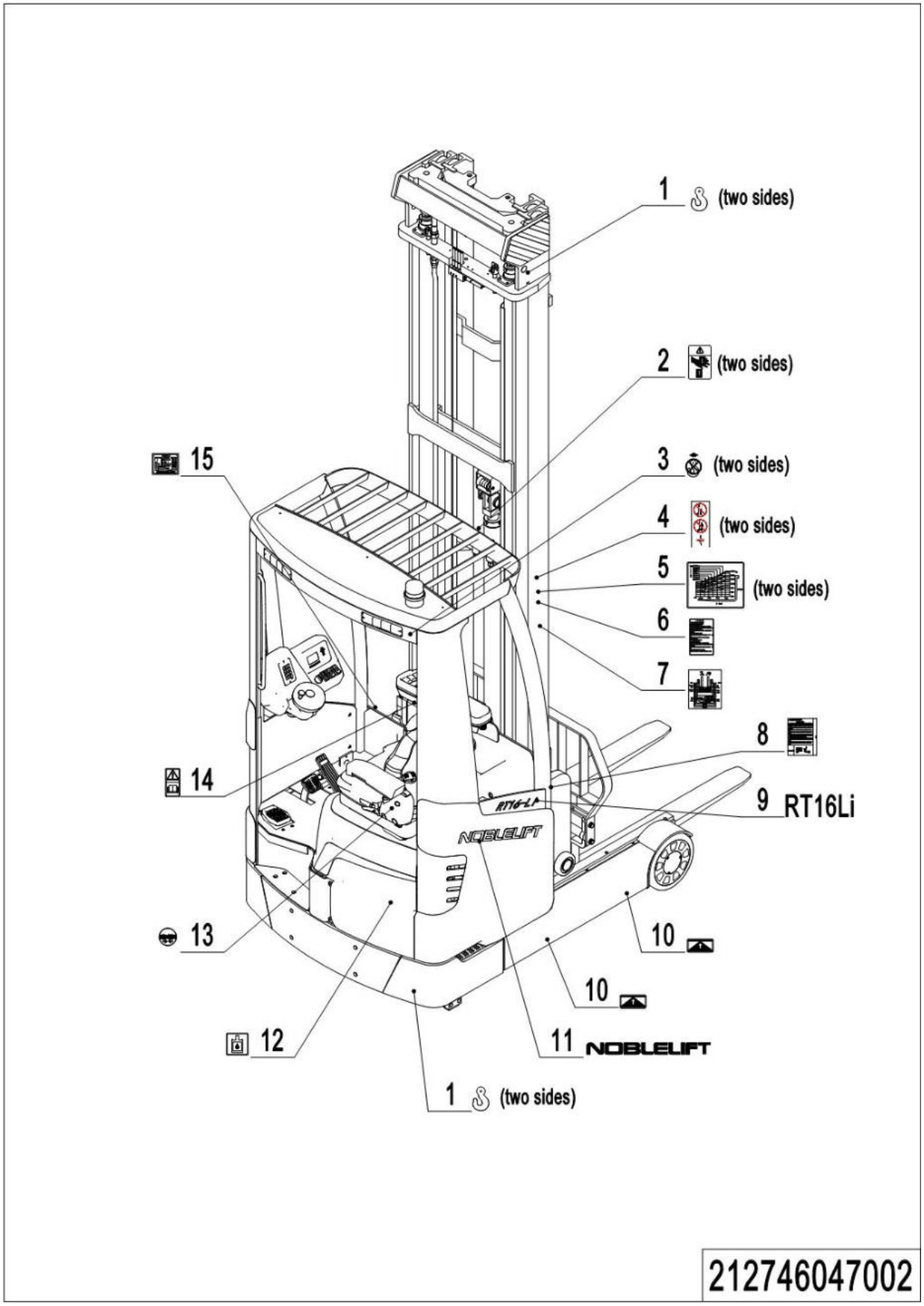

1= Supply as package. 2= Supply with constraints. 3= Phasing-out supply. 4= Supply as assembly. 5= Check other tables.

02 Labels and Decals(212746047002)

No.	Item Code	Mark	Item Description	Qty.	Substitute	Note
1	941200300001		Label	4		
2	941200100027		Label	2		
3	941200100025		Label	2		
4	941200100004		Label	2		
5	212147020016		Load Capacity Diagram	2		
6	212147020012		Label	1		
7	212147020010		Label,Lubrication	1		
8	212147020011		Label	1		
9	212747020001		Label	1		
10	255047020023		Label	2		
11	212147020006		Label	1		
12	255047020004		Label	1		
13	255047020012		Label	1		
14	941200300011		Label	1		
15	941200600003		Identification Plate	1		

1= Supply as package. 2= Supply with constraints. 3= Phasing-out supply. 4= Supply as assembly. 5= Check other tables.

Appendix

01 Electrical Circuit Diagram(Curtis 1232SE)(212746045501)

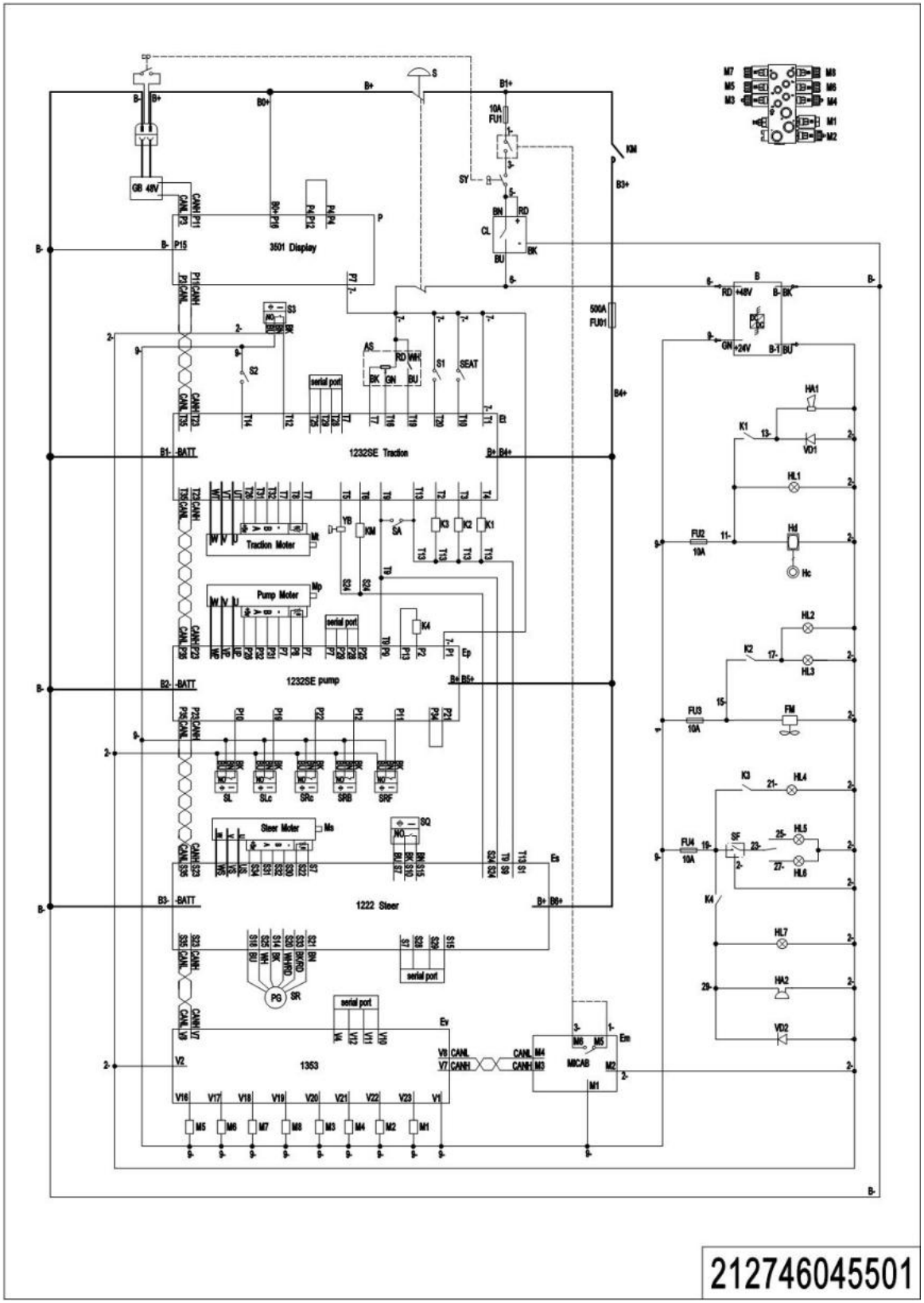

1= Supply as package. 2= Supply with constraints. 3= Phasing-out supply. 4= Supply as assembly. 5= Check other tables.

02 Electrical Circuit Diagram(Curtis F4A)(212746045503)

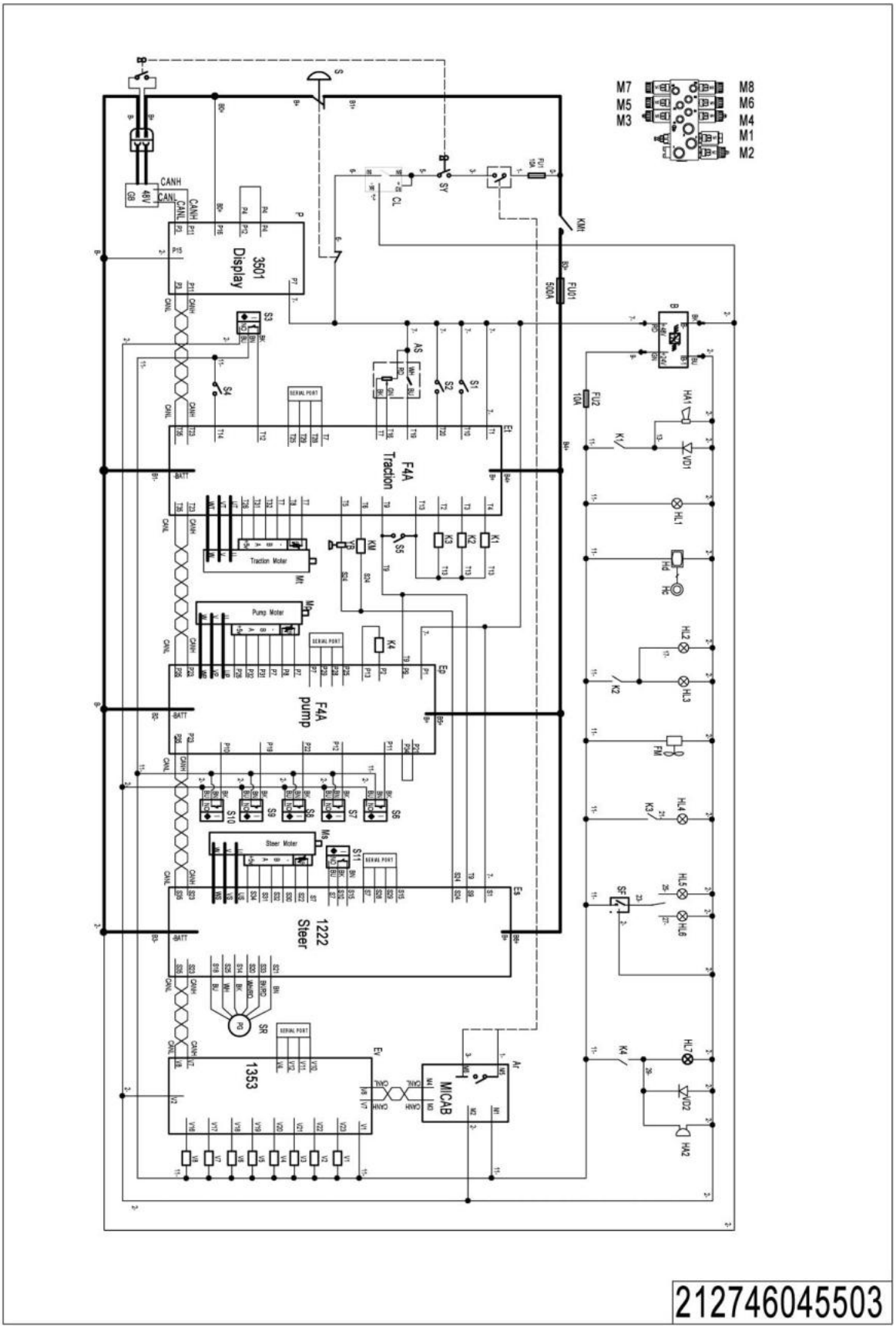

1= Supply as package. 2= Supply with constraints. 3= Phasing-out supply. 4= Supply as assembly. 5= Check other tables.

03 Electrical Circuit Diagram(Inmotion)(212746045502)

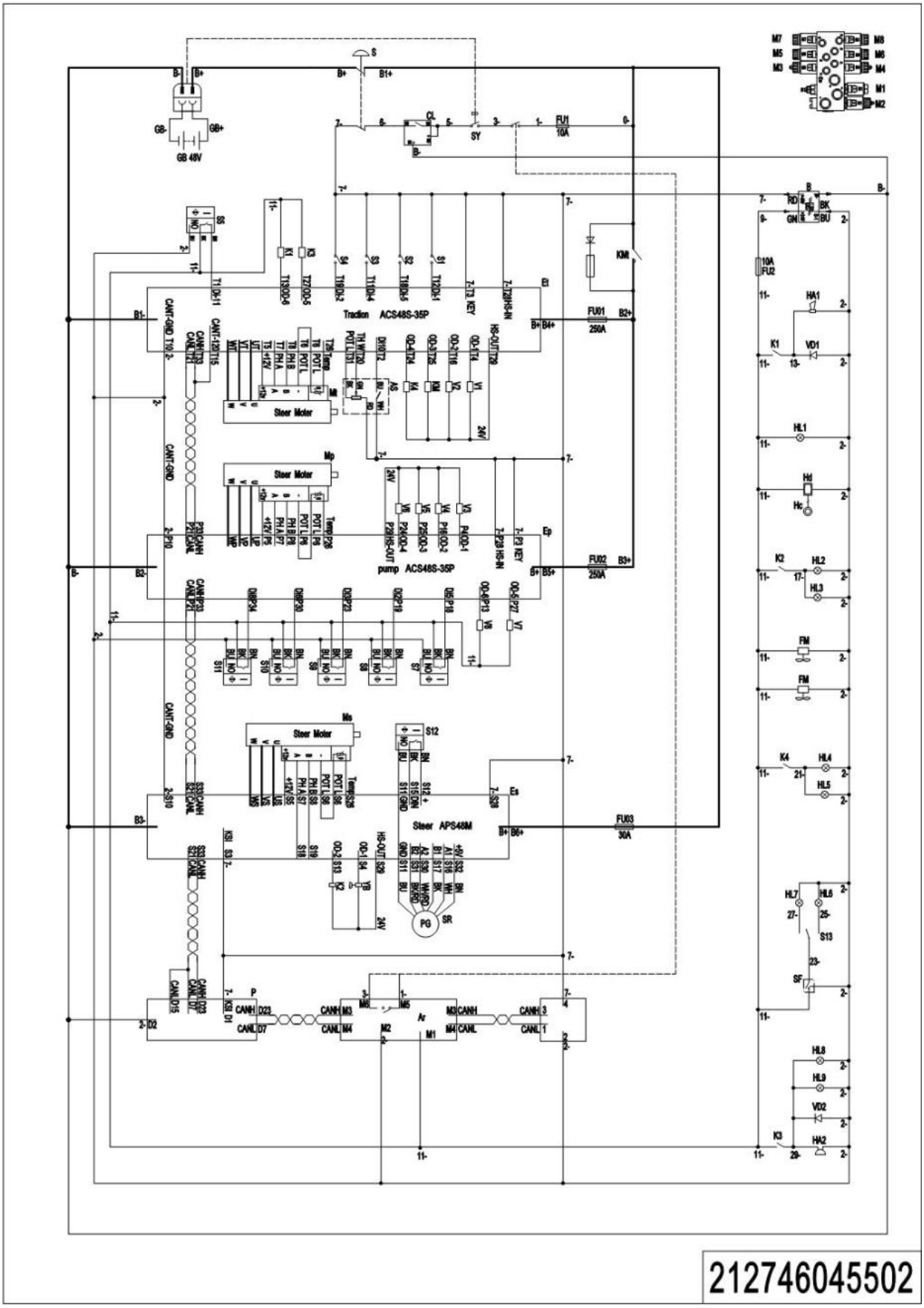

1= Supply as package. 2= Supply with constraints. 3= Phasing-out supply. 4= Supply as assembly. 5= Check other tables.

04 Hydraulic Circuit Diagram

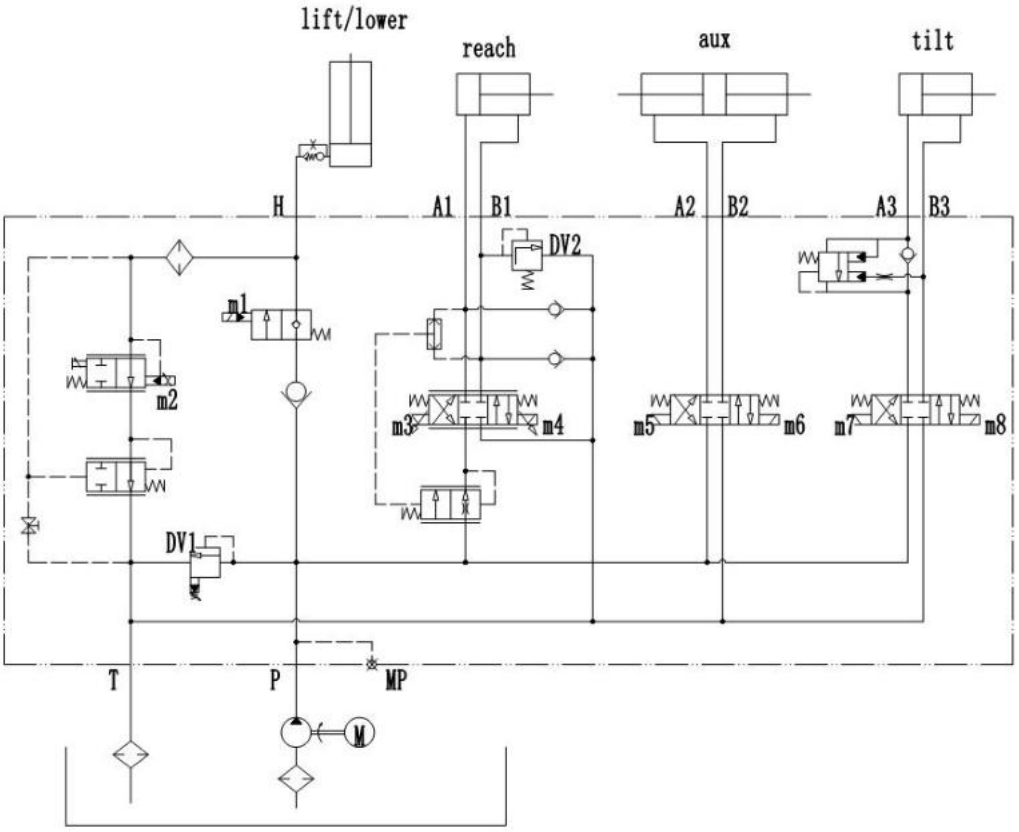

212146045502

1= Supply as package. 2= Supply with constraints. 3= Phasing-out supply. 4= Supply as assembly. 5= Check other tables.

05 Consumable Parts List

No.	Item Code	Item Description	Qty.	Chapter/ Section/ Number
1	940300400041	WheelΦ343x140	1	Chapter 1/01/20
2	212198510004	Seal Kit	1	Chapter 2/02/6.01
3	212198510000	Seal Kit	2	Chapter 2/04/2.01
4	212198510002	Seal Kit	2	Chapter 4/01/17.01
5	940200300052	Compound Roller	4	Chapter 4/01/20Chapter 4/02/18
6	940200300046	Compound Roller	4	Chapter 4/02/3Chapter 4/03/16
7	212198510003	Seal Kit	1	Chapter 4/03/15.01
8	940200100042	Main Roller	2	Chapter 4/04/12
9	940200300042	Compound Roller	4	Chapter 4/04/14
10	940200100008	Main Roller	4	Chapter 4/04/21
11	940200300040	Compound Roller	6	Chapter 4/05/9
12	910700200019	Bearing	4	Chapter 4/06/3
13	940500100016	Bushing	1	Chapter 4/06/17
14	910800100124	O-Ring	26	Chapter 4/06/19
15	940500100079	Bushing	20	Chapter 4/06/32
16	910800100125	O-Ring	4	Chapter 4/06/46
17	910800100061	O-Ring	4	Chapter 4/06/63
18	910700200004	Bearing	1	Chapter 5/01/23
19	940500200016	Bushing	2	Chapter 5/03/3
20	941101000005	Bearing	1	Chapter 5/04/7
21	940300300034	WheelΦ285x110	2	Chapter 5/04/8
22	920100200002	Fuse	1	Chapter 6/03/6Chapter 6/04/5
23	920100100014	Fuse	1	Chapter 6/03/7

1= Supply as package. 2= Supply with constraints. 3= Phasing-out supply. 4= Supply as assembly. 5= Check other tables.