NOBLELIFT

Stand Reach Truck RT15ST2

PARTS MANUAL

216146020101

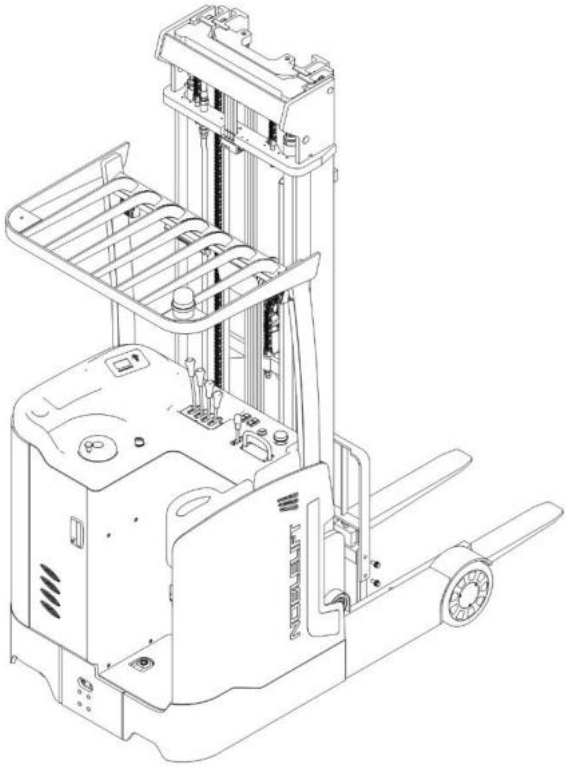

Version: V03

Truck Identification Number From:

Parts Manual

RT15ST2-PM03EN

Please order spare parts from authorized dealers of Noblelift Intelligent Equipment Co., LTD.

In order to avoid wrong delivery, all the orders for spare parts should specify the following items:

- Truck model, identification number and manufacture year.
- Orders for spare parts of mast, hydraulic transmission unit, steering axle, motor, etc. shall indicate the manufacture number of these parts.
- Codes for Noblelift spare parts are shown in the table of parts manual. Please also pay attention to the description of supply status, order quantity, etc. (check the number listed in "Mark" column of the parts manual).

"Mark" Column:

The unmarked indicates the parts are in short supply cycle.

Number 1: supply as package. Indicating these that parts are small parts and seal parts, which are supplied in package unit and in short supply cycle.

Number 2: supply with constraints. Indicating that these spare parts are not in stock and will be prepared for production after receiving the order from customers, which are in long supply cycle.

Number 3: phasing-out supply. Indicating that these parts will be replaced by new parts due to technical improvements and the current stock will not be available when these parts run out. Please check the description of technical improvements notice.

Number 4: supply as assembly. Indicating that these parts are assembly parts defined by manufacture process, which cannot be supplied as a single part.

Number 5: check other tables.

This parts manual is the property of Noblelift and can be shared under the confidential agreement only, Noblelift has the right to claim for compensation of any unauthorized use. Copy without permission is not allowed. Figures in the manual are not limited by the original design. Noblelift Intelligent Equipment Co., LTD reserves the right to improve the products for continuous technology progress.

Table of Contents

Chapter 1：Drive System....1
01 Drive Unit (216146013501)....1
01 Drive Unit (216146013501) Continuation 1....3
02 Lift Unit (216146032501)....5
Chapter 2：Hydraulic System....7
01 Four Way Hydraulic Circuit of Chassis (216146025501)....7
01 Four Way Hydraulic Circuit of Chassis (216146025501) Continuation 1....9
02 Multi-way Valve Assembly for Four Way Circuit (216146025502)....11
03 Three Way Hydraulic Circuit of Chassis (216146025503)....13
03 Three Way Hydraulic Circuit of Chassis (216146025503) Continuation 1....15
04 Multi-way Valve Assembly for Three Way Circuit (216146025504)....17
05 Reach Cylinder (216146020001)....19
06 Oil Tank (216146019001)....21
07 Tilt Cylinder (212146020501)....23
Chapter 3：Truck Frame....25
01 Chassis (216146021501)....25
01 Chassis (216146021501) Continuation 1....27
02 Handle Assembly (216146021502)....29
03 Overhead Guard (216146022001)....31
04 Platform (216146018001)....33
Chapter 4：Mast....35
01 Outer Mast (216146044501)....35
01 Outer Mast (216146044501) Continuation 1....37
02 Middle Mast (216146044502)....39
02 Middle Mast (216146044502) Continuation 1....41
03 Inner Mast (216146044503)....43
03 Inner Mast (216146044503) Continuation 1....45
04 Fork Carriage (216146044504)....47
05 Four Way Hydraulic Circuit of Mast (216146044505)....49
05 Four Way Hydraulic Circuit of Mast (216146044505) Continuation 1....51
05 Four Way Hydraulic Circuit of Mast (216146044505) Continuation 2....53
06 Three Way Hydraulic Circuit of Mast (216146044506)....55
06 Three Way Hydraulic Circuit of Mast (216146044506) Continuation 1....57
06 Three Way Hydraulic Circuit of Mast (216146044506) Continuation 2....59
Chapter 5：Steering System And Wheels....61
01 Steering Wheel (216146031501)....61
02 Load Wheel (216146017001)....63
Chapter 6：Electrical Parts....65
01 Controller (Inmotion) (216146033001)....65
02 Controller (F4A) (216146033002)....67
03 Wire Harness(Inmotion)(216146033003)....69
04 Wire Harness(F4A) (216146033004)....71

05 Charger (216146036501) 73
Chapter 7：Special Parts 75
01 Battery Holder (216146012501) 75
02 Monitor (212146036001)....77
Chapter 8: Others....79
01 Control Panel (216146010001) 79
02 Labels and Decal (216146047001)....81
Appendix....83
01 Electrical Circuit Diagram(Inmotion) (216146003001) 83
02 Electrical Circuit Diagram(F4A) (216146003002)....84
03 Electrical Circuit Diagram(F4A+Li) (216246003003) 85
04 Hydraulic Circuit Diagram (216146045501)....86
05 Consumable Parts List....87

Chapter 1： Drive System

01 Drive Unit (216146013501)

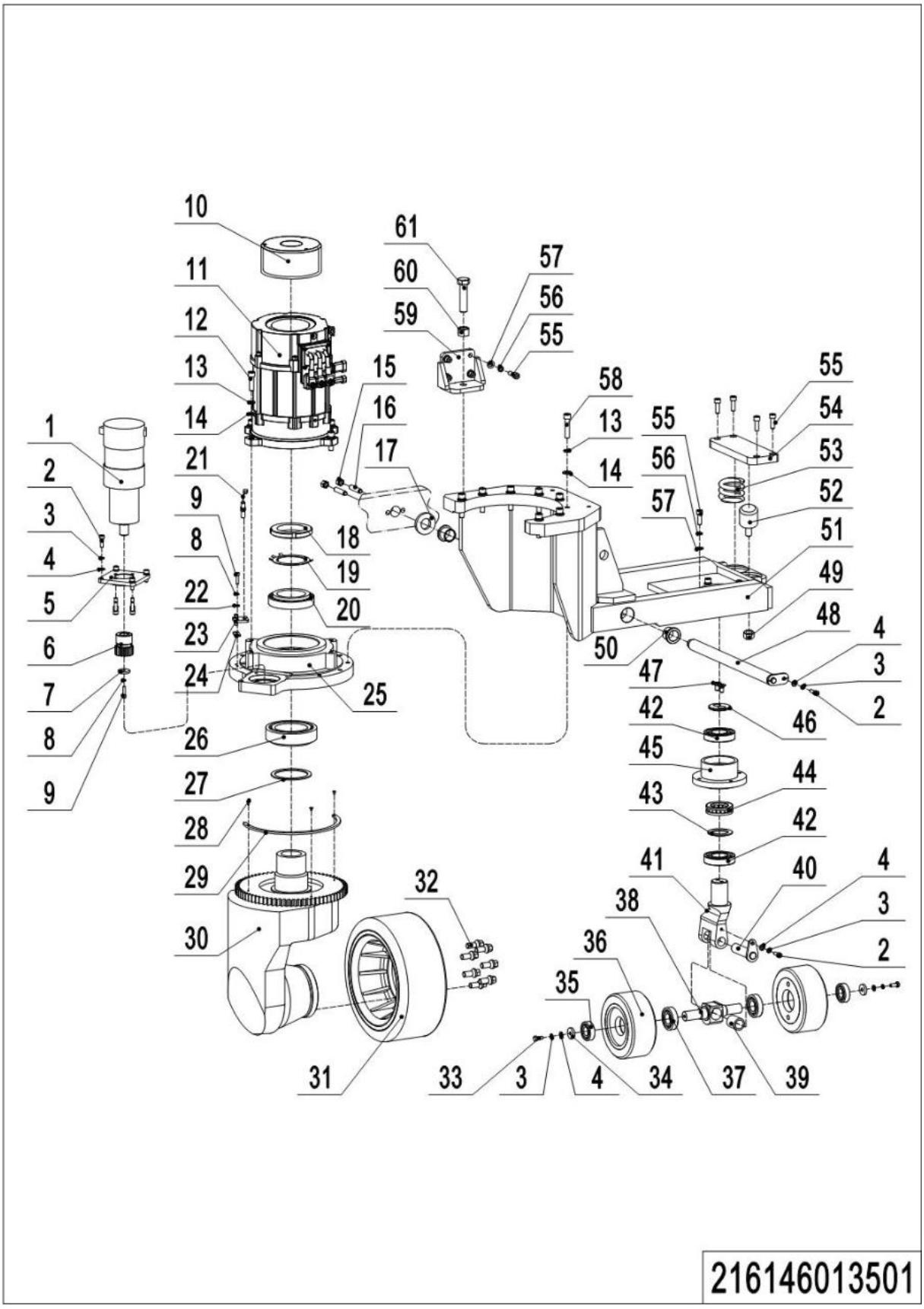

1= Supply as package. 2= Supply with constraints. 3= Phasing-out supply. 4= Supply as assembly. 5= Check other tables.

01 Drive Unit (216146013501)

No.	Item Code	Mark	Item Description	Qty.	Substitute	Note
1	940900800001		Steering Unit	1		
2	910200200058		Screw	10		
3	910400500006		Spring Washer	8		
4	910400100006		Flat Washer	8		
5	216113520014		Flange	1		
6	216113520025		Gear	1		
7	505616520007		Retaining Ring	1		
8	910400500005		Spring Washer	3		
9	910200200038		Screw	3		
10	940700100003		Brake	1		
11	920900100151		Motor	1		
12	910200200100		Screw	4		
13	910400500008		Spring Washer	12		
14	910400100008		Flat Washer	12		
15	910300100008		Nut	2		
16	910201000021		Screw	2		
17	216113520029		Washer	1		
18	216514020000		Nut	1		
19	910400900016		Lock Washer	1		
20	910700600024		Bearing	1		
21	212133510007		Proximity Switch			
22	910400100005		Flat Washer	3		
23	216113520012		Fixing Plate	1		
24	216113520013		Subplate	1		
25	216113520011		Fixing Base	1		
26	910700600039		Bearing	1		
27	216514020002		Spacer Bush	1		
28	910200400003		Screw	3		
29	216113520030		Induction Block	1		
30	941000100002		Gearbox	1		
31	940300400007		Wheel Φ343x140	1		

01 Drive Unit (216146013501) Continuation 1

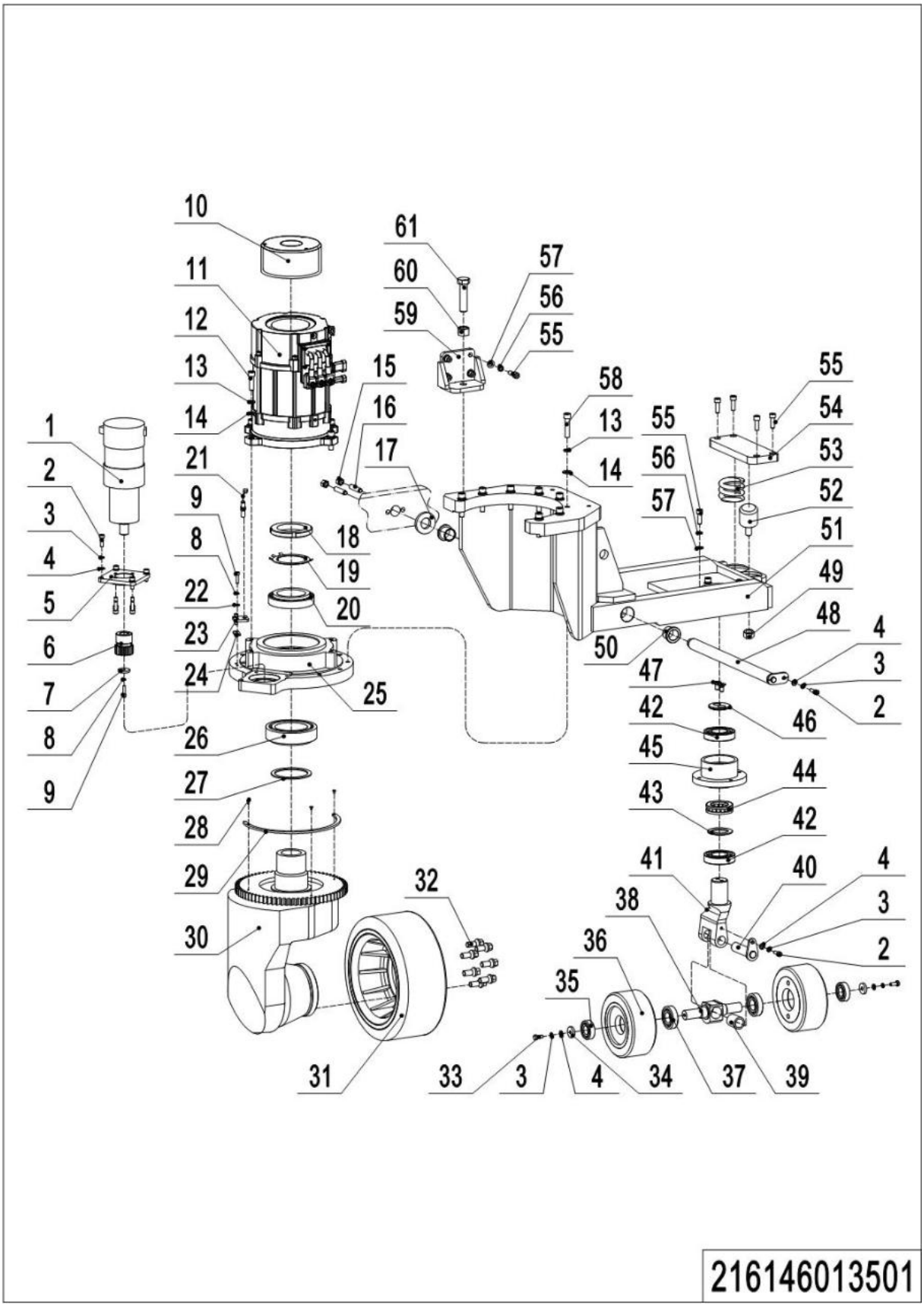

01 Drive Unit (216146013501) Continuation 1

No.	Item Code	Mark	Item Description	Qty.	Substitute	Note
32	216513020000		Bolt	7		
33	910100300022		Bolt	2		
34	216516520000		Fixing Plate	2		
35	910700200020		Bearing	2		
36	940300300022		Wheel Φ180x76	2		
37	910700200021		Bearing	2		
38	216516520004		Axle	1		
39	940500400007		Bearing	1		
40	216516510000		Pin	1		
41	216516520003		Wheel Carrier	1		
42	910700200024		Bearing	2		
43	216516520007		Washer	1		
44	910700700015		Bearing	1		
45	216113520017		Bearing Base	1		
46	216113520016		Press Plate	1		
47	910200400035		Screw	2		
48	216113510001		Pin	1		
49	910300500008		Nut	1		
50	940500400004		Bearing	2		
51	216113510000		Drive Axle	1		
52	212144520065		Crash Pad	1		
53	216113520028		Spring	1		
54	216113520015		Press Plate	1		
55	910200200077		Screw	12		
56	910400500007		Spring Washer	8		
57	910400100007		Flat Washer	8		
58	910200200103		Screw	8		
59	216113510002		Fixing Base	1		
60	910300100012		Nut	1		
61	910100100090		Bolt	1		

02 Lift Unit (216146032501)

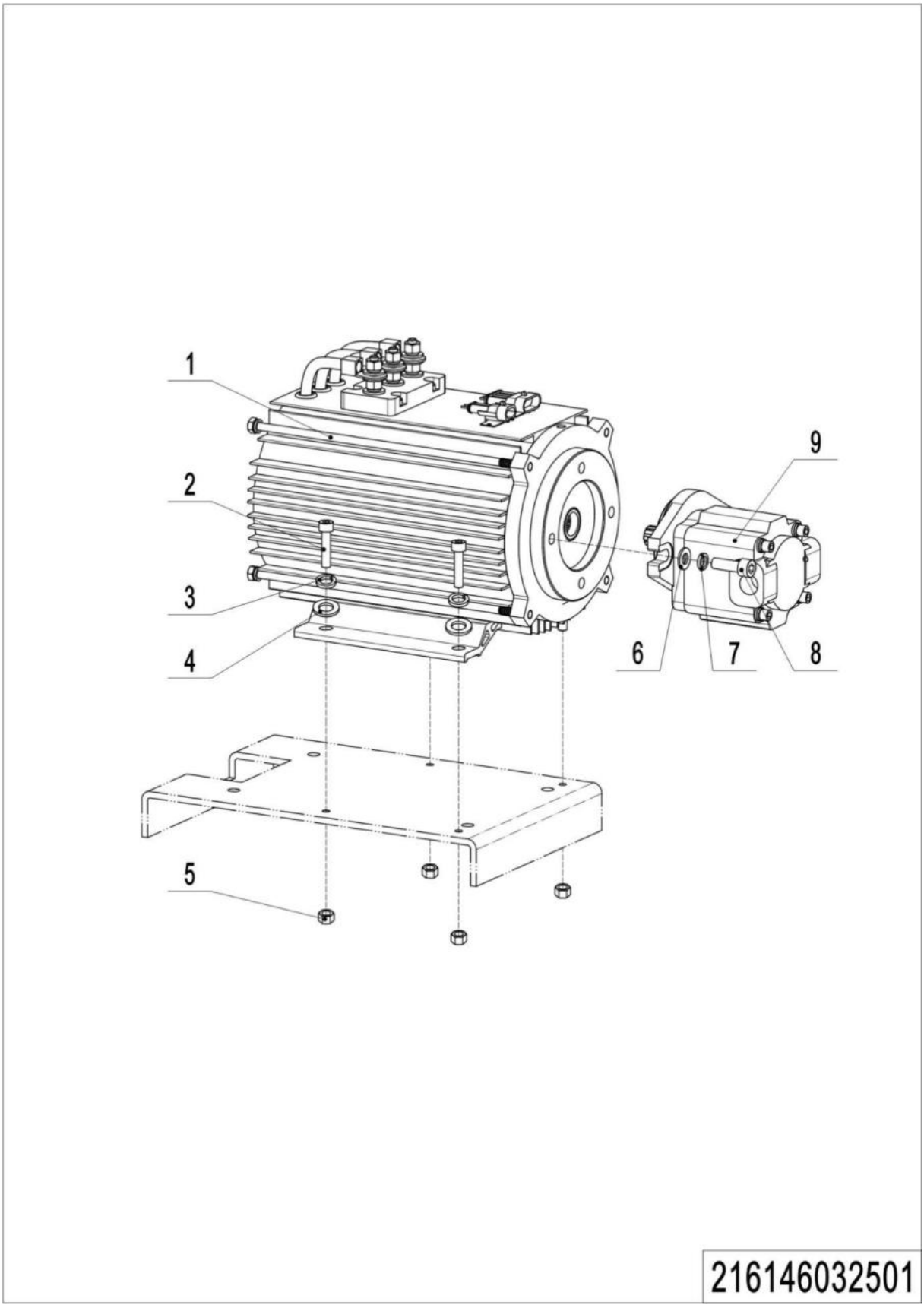

1= Supply as package. 2= Supply with constraints. 3= Phasing-out supply. 4= Supply as assembly. 5= Check other tables.

02 Lift Unit (216146032501)

No.	Item Code	Mark	Item Description	Qty.	Substitute	Note
1	920900100103		Motor	1		
2	910200200059		Screw	4		
3	910400500006		Spring Washer	4		
4	910400100006		Flat Washer	4		
5	910300100006		Nut	4		
6	910400100007		Flat Washer	2		
7	910400500007		Spring Washer	2		
8	910200200077		Screw	2		
9	950800200008		Gear Pump	1		

1= Supply as package. 2= Supply with constraints. 3= Phasing-out supply. 4= Supply as assembly. 5= Check other tables.

Chapter 2：Hydraulic System

01 Four Way Hydraulic Circuit of Chassis (216146025501)

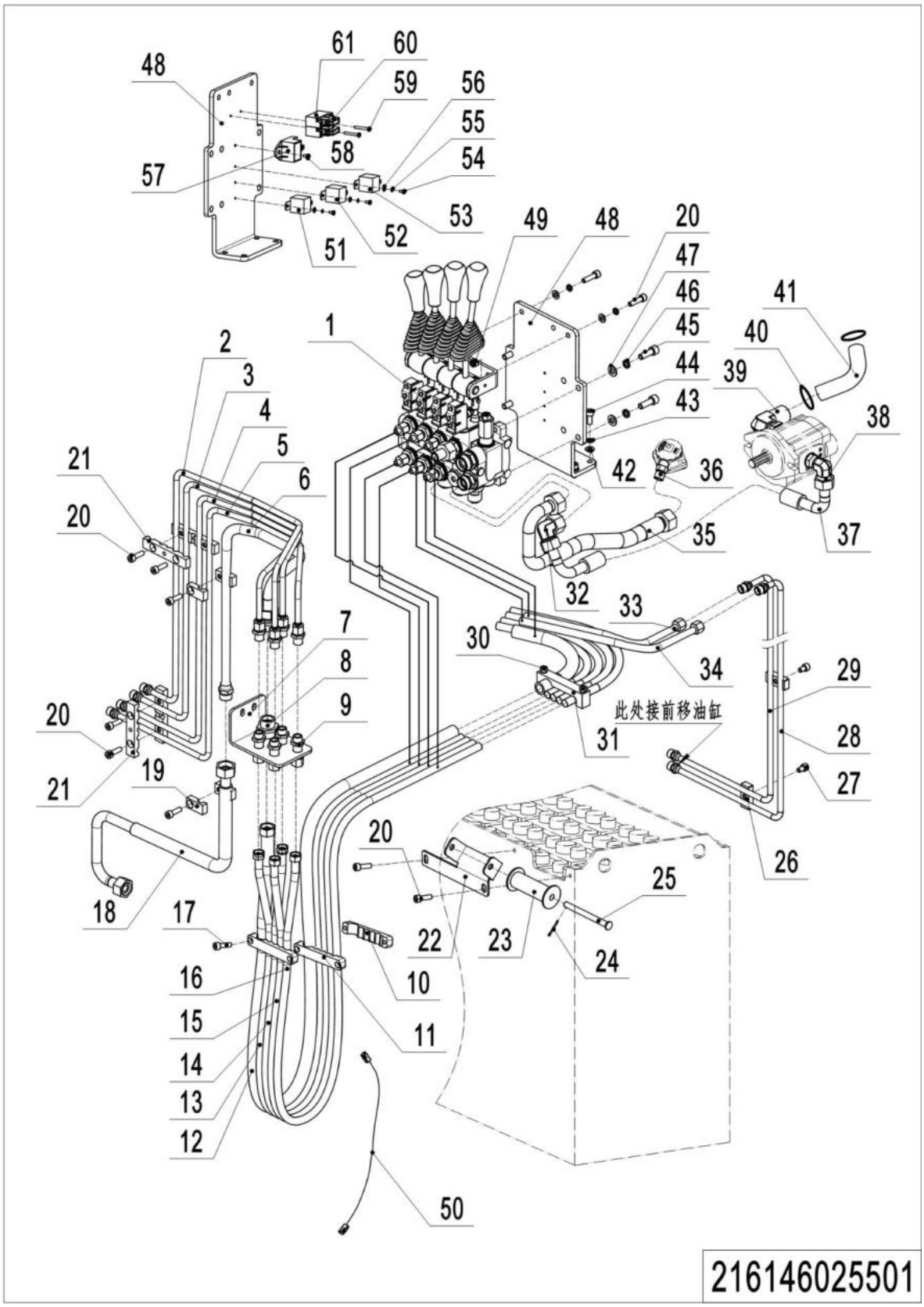

01 Four Way Hydraulic Circuit of Chassis (216146025501)

No.	Item Code	Mark	Item Description	Qty.	Substitute	Note
1	216125501002		Multitandem Valve Kits	1		
2	216125520035		Steel Tube	1		
3	216125520034		Steel Tube	1		
4	216125520033		Steel Tube	1		
5	216125520032		Steel Tube	1		
6	216125520036		Steel Tube	1		
7	216125520038		Fixing Plate	1		
8	950400500005		Adapter	1		
9	950400500001		Joint	4		
10	216125520044		Pipe Clip	2		
11	216125520045		Pipe Clip	2		
12	216125520031		Hose	1		
13	216125520027		Hose	1		
14	216125520025		Hose	1		
15	216125520026		Hose	1		
16	216125520028		Hose	1		
17	910200200035		Screw	4		
18	216125520005		Hose	1		
19	213044520110		Pipe Clip	4		
20	910200200058		Screw	10		
21	201038020008		Pipe Clip	2		
22	216125520041		Fixing Plate	1		
23	216125520040		Slideway	1		
24	910600600019		Cotter Pin	1		
25	216125520042		Pin	1		
26	201044520027		Pipe Clip	5		
27	910200200055		Screw	2		
28	216125520017		Hose	1		
29	216125520016		Hose	1		
30	910200200061		Screw	2		

01 Four Way Hydraulic Circuit of Chassis (216146025501) Continuation 1

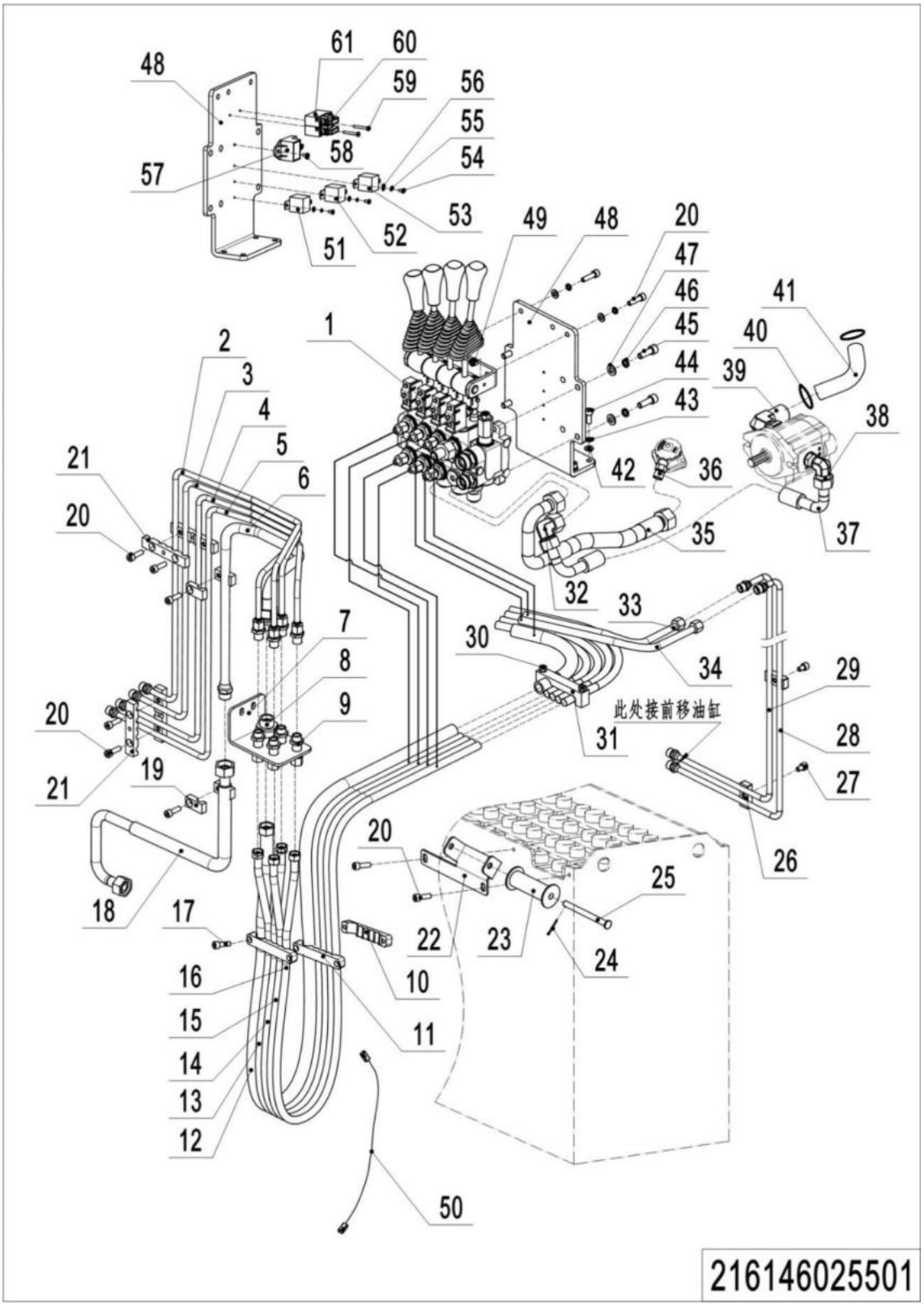

1= Supply as package. 2= Supply with constraints. 3= Phasing-out supply. 4= Supply as assembly. 5= Check other tables.

01 Four Way Hydraulic Circuit of Chassis (216146025501) Continuation 1

No.	Item Code	Mark	Item Description	Qty.	Substitute	Note
31	216125520039		Pipe Clip	1		
32	950400200006		Joint	1		
33	216125520030		Hose	1		
34	216125520029		Hose	1		
35	216125520019		Hose	1		
36	950400300017		Joint	1		
37	216125520018		Hose	1		
38	950401100005		Joint	1		
39	216525020008		Adapter	1		
40	911000600006		Hose Clamp	2		
41	212125020001		Oil Tube	1		
42	910400100006		Flat Washer	6		
43	910400500006		Spring Washer	6		
44	910200200057		Screw	4		
45	910100200025		Bolt	4		
46	910400500007		Spring Washer	4		
47	910400100007		Flat Washer	4		
48	216125520001		Mounting Plate	1		
49	910300100007		Nut	2		
50	216133010014		Wiring Harness	1		
51	920800100011		Relay	1		Optional
52	920800100011		Relay	1		
53	920800100011		Relay	1		
54	910200500034		Screw	3		
55	910400500003		Spring Washer	3		
56	910400100003		Flat Washer	3		
57	922000100005		Lamp	1		
58	910200500036		Screw	2		
59	910200500028		Screw	2		
60	920100200002		Fuse	2		
61	920100400005		Fuse Holder	1		

02 Multi-way Valve Assembly for Four Way Circuit (216146025502)

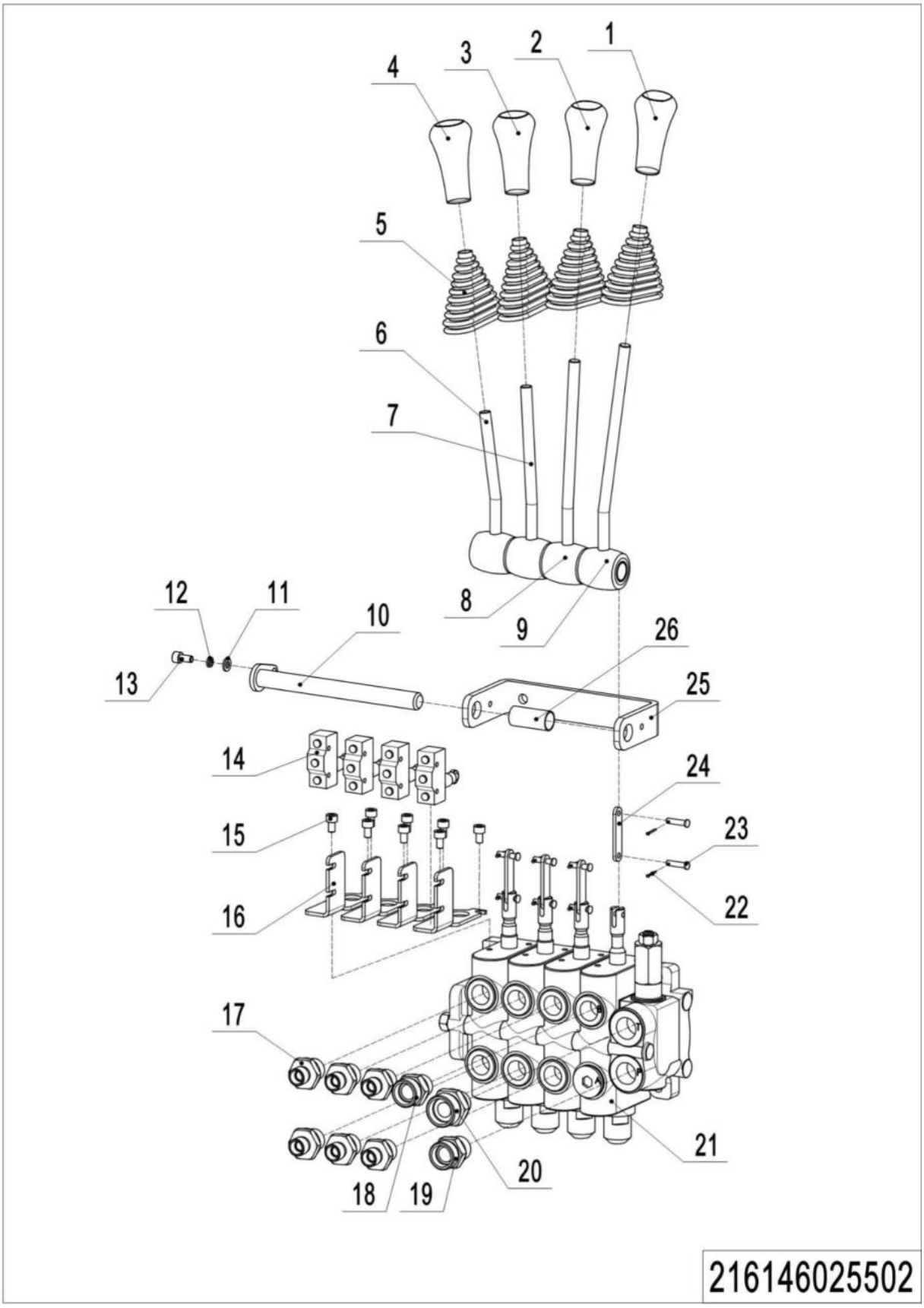

1= Supply as package. 2= Supply with constraints. 3= Phasing-out supply. 4= Supply as assembly. 5= Check other tables.

02 Multi-way Valve Assembly for Four Way Circuit (216146025502)

No.	Item Code	Mark	Item Description	Qty.	Substitute	Note
1	253524520010		Knob	1		
2	216525020011		Knob	1		
3	253524520009		Knob	1		
4	253525020002		Knob	1		
5	216510520004		Jacket	4		
6	216125510003		Joystick	1		
7	216125510002		Joystick	1		
8	216125510001		Joystick	1		
9	216125510000		Joystick	1		
10	201025510001		Pin	1		
11	910400100005		Flat Washer	1		
12	910400500005		Spring Washer	1		
13	910200200033		Screw	1		
14	920200300004		Microswitch	4		
15	910200200171		Screw	8		
16	212225520021		Fixing Plate	4		
17	950400400012		Joint	6		
18	213025020007		Adapter	1		
19	950400400008		Joint	1		
20	213025020008		Adapter	1		
21	950700100006		Multi-way Valve	1		
22	910600600011		Cotter Pin	8		
23	941100800001		Pin	8		
24	216125520002		Plate	4		
25	216125520000		Fixing Plate	1		
26	940500100007		Bushing	4		

03 Three Way Hydraulic Circuit of Chassis (216146025503)

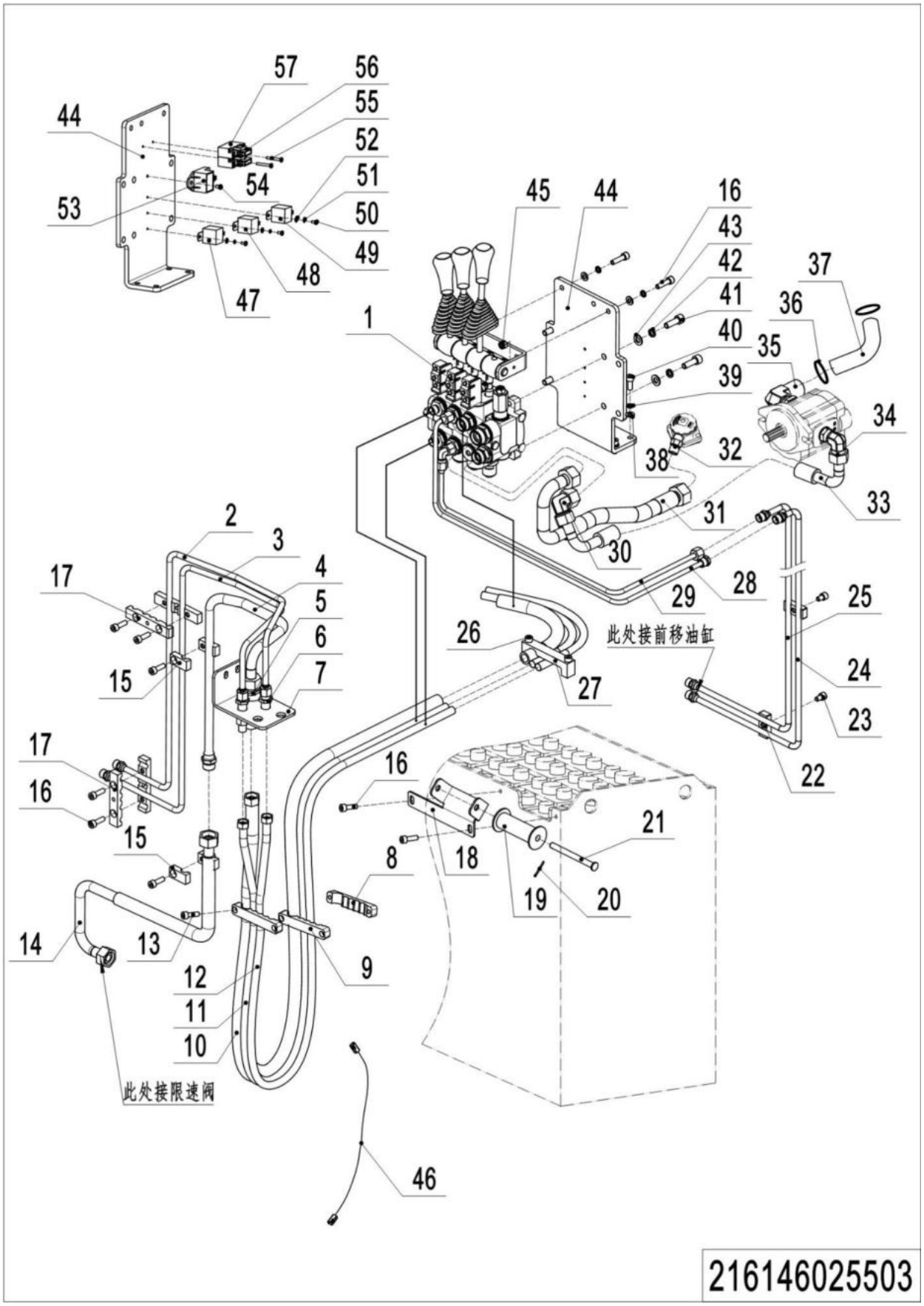

1= Supply as package. 2= Supply with constraints. 3= Phasing-out supply. 4= Supply as assembly. 5= Check other tables.

03 Three Way Hydraulic Circuit of Chassis (216146025503)

No.	Item Code	Mark	Item Description	Qty.	Substitute	Note
1	216125501002		Multitandem Valve Kits	1		
2	216125520034		Steel Tube	1		
3	216125520033		Steel Tube	1		
4	216125520036		Steel Tube	1		
5	950400500005		Adapter	1		
6	950400500001		Joint	1		
7	216125520038		Fixing Plate	1		
8	216125520044		Pipe Clip	2		
9	216125520045		Pipe Clip	2		
10	216125520031		Hose	1		
11	216125520027		Hose	1		
12	216125520025		Hose	1		
13	910200200035		Screw	4		
14	216125520005		Hose	1		
15	213044520110		Pipe Clip	2		
16	910200200058		Screw	10		
17	201038020008		Pipe Clip	2		
18	216125520041		Fixing Plate	1		
19	216125520040		Slideway	1		
20	910600600019		Cotter Pin	1		
21	216125520042		Pin	1		
22	201044520027		Pipe Clip	5		
23	910200200055		Screw	2		
24	216125520017		Hose	1		
25	216125520016		Hose	1		
26	910200200061		Screw	2		
27	216125520039		Pipe Clip	1		
28	216125520029		Hose	1		
29	216125520030		Hose	1		
30	950400200006		Joint	1		

1= Supply as package. 2= Supply with constraints. 3= Phasing-out supply. 4= Supply as assembly. 5= Check other tables.

03 Three Way Hydraulic Circuit of Chassis (216146025503) Continuation 1

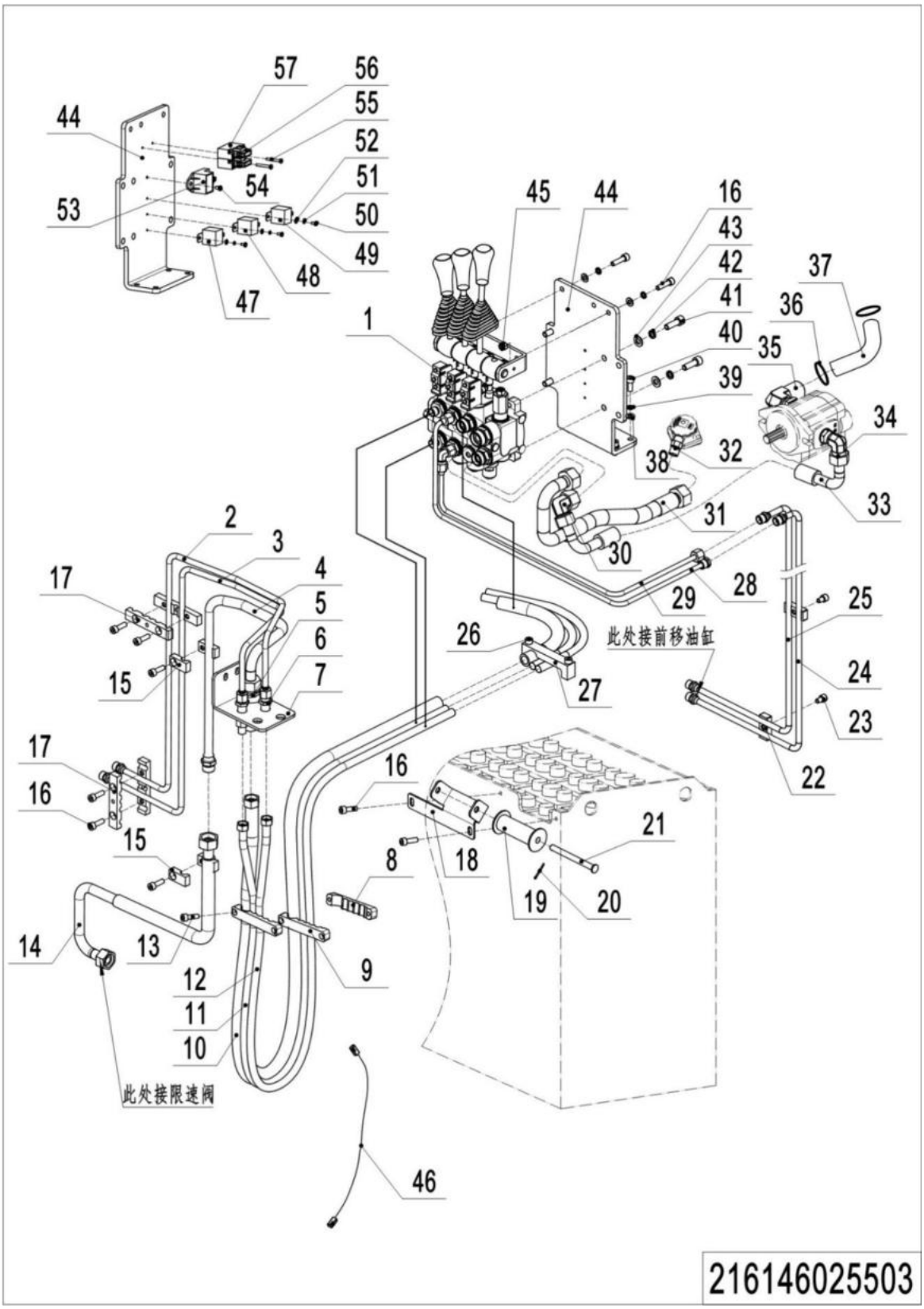

03 Three Way Hydraulic Circuit of Chassis (216146025503) Continuation 1

No.	Item Code	Mark	Item Description	Qty.	Substitute	Note
31	216125520019		Hose	1		
32	950400300017		Joint	1		
33	216125520018		Hose	1		
34	950401100005		Joint	1		
35	216525020008		Adapter	1		
36	911000600006		Hose Clamp	2		
37	212125020001		Oil Tube	1		
38	910400100006		Flat Washer	6		
39	910400500006		Spring Washer	6		
40	910200200057		Screw	4		
41	910100200025		Bolt	4		
42	910400500007		Spring Washer	4		
43	910400100007		Flat Washer	4		
44	216125520001		Mounting Plate	1		
45	910300100007		Nut	2		
46	216133010014		Wiring Harness	1		
47	920800100011		Relay	1		Optional
48	920800100011		Relay	1		
49	920800100011		Relay	1		
50	910200500034		Screw	3		
51	910400500003		Spring Washer	3		
52	910400100003		Flat Washer	3		
53	922000100005		Lamp	1		
54	910200500036		Screw	2		
55	910200500028		Screw	2		
56	920100200002		Fuse	2		
57	920100400005		Fuse Holder	1		

04 Multi-way Valve Assembly for Three Way Circuit (216146025504)

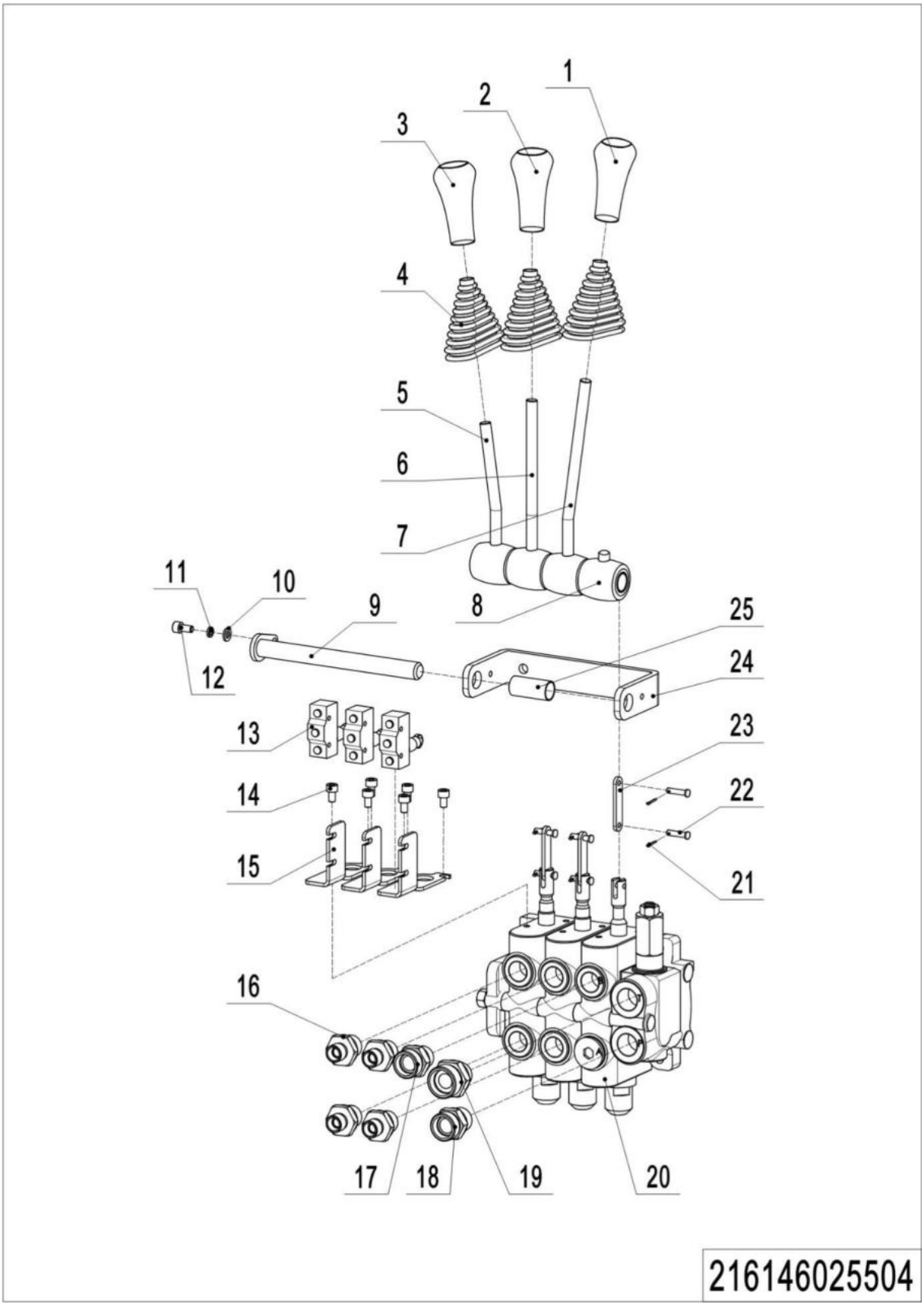

1= Supply as package. 2= Supply with constraints. 3= Phasing-out supply. 4= Supply as assembly. 5= Check other tables.

04 Multi-way Valve Assembly for Three Way Circuit (216146025504)

No.	Item Code	Mark	Item Description	Qty.	Substitute	Note
1	253524520010		Knob	1		
2	216525020011		Knob	1		
3	253524520009		Knob	1		
4	216510520004		Jacket	1		
5	216125510002		Joystick	1		
6	216125510001		Joystick	1		
7	216125510000		Joystick	1		
8	216125520043		Bracket	1		
9	201025510001		Pin	1		
10	910400100005		Flat Washer	1		
11	910400500005		Spring Washer	1		
12	910200200033		Screw	1		
13	920200300004		Microswitch	3		
14	910200200171		Screw	6		
15	212225520021		Fixing Plate	3		
16	950400400012		Joint	4		
17	213025020007		Adapter	1		
18	213025020008		Adapter	1		
19	950400400008		Joint	1		
20	950700100004		Multi-way Valve	1		
21	910600600011		Cotter Pin	6		
22	941100800001		Pin	6		
23	216125520002		Plate	3		
24	216125520000		Fixing Plate	1		
25	940500100007		Bushing	4		

05 Reach Cylinder (216146020001)

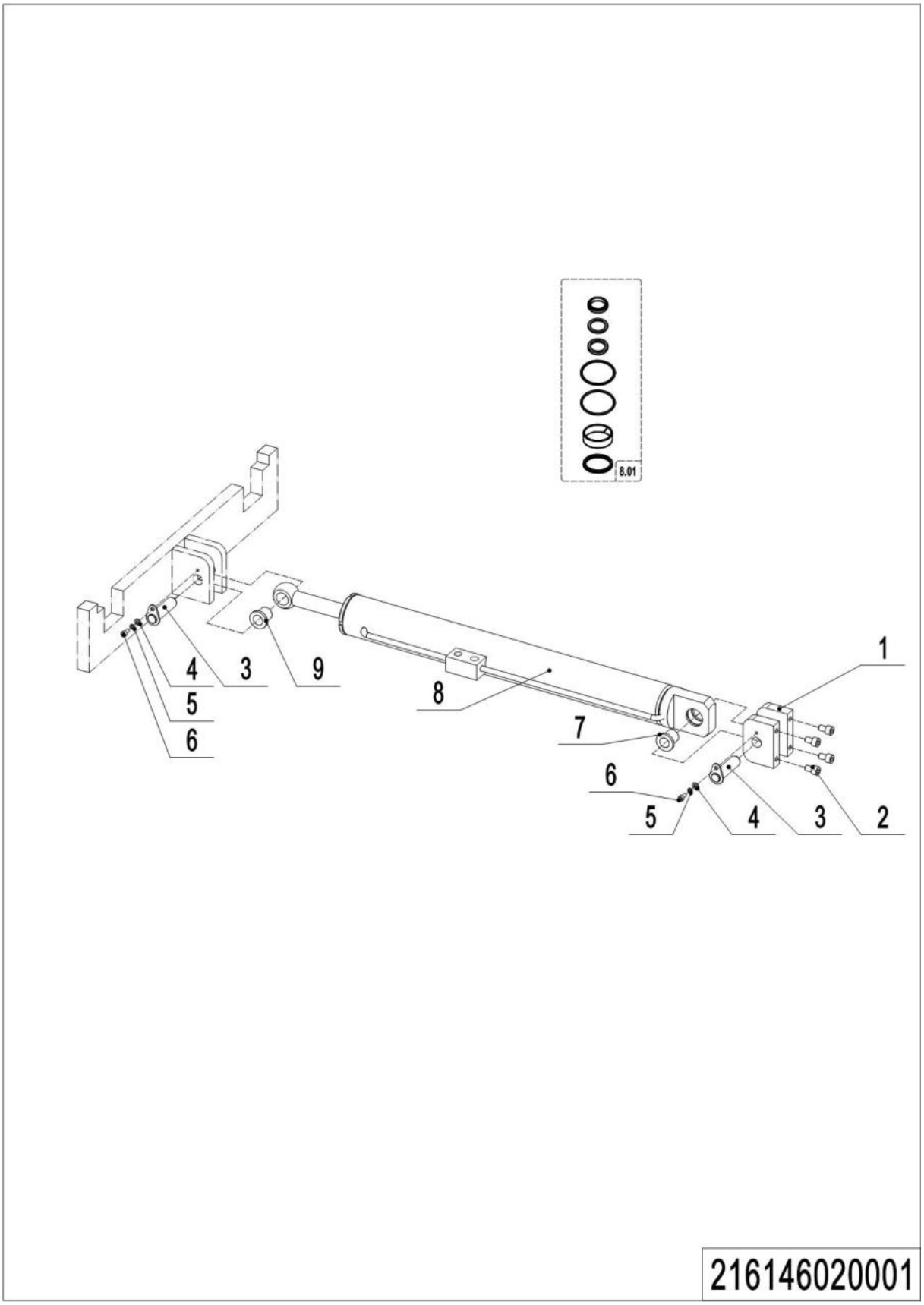

1= Supply as package. 2= Supply with constraints. 3= Phasing-out supply. 4= Supply as assembly. 5= Check other tables.

05 Reach Cylinder (216146020001)

No.	Item Code	Mark	Item Description	Qty.	Substitute	Note
1	216120020000		Fixing Plate	2		
2	910200200076		Screw	4		
3	212120010001		Pin	2		
4	910400100005		Flat Washer	2		
5	910400500005		Spring Washer	2		
6	910200200034		Screw	2		
7	212120020002		Bushing	1		
8	216120010001		Cylinder	1		without sideshift
8	216120010002		Cylinder	1		with sideshift
8.01	212198510004		Seal Kit	1		
9	212120020003		Bushing	1		

06 Oil Tank (216146019001)

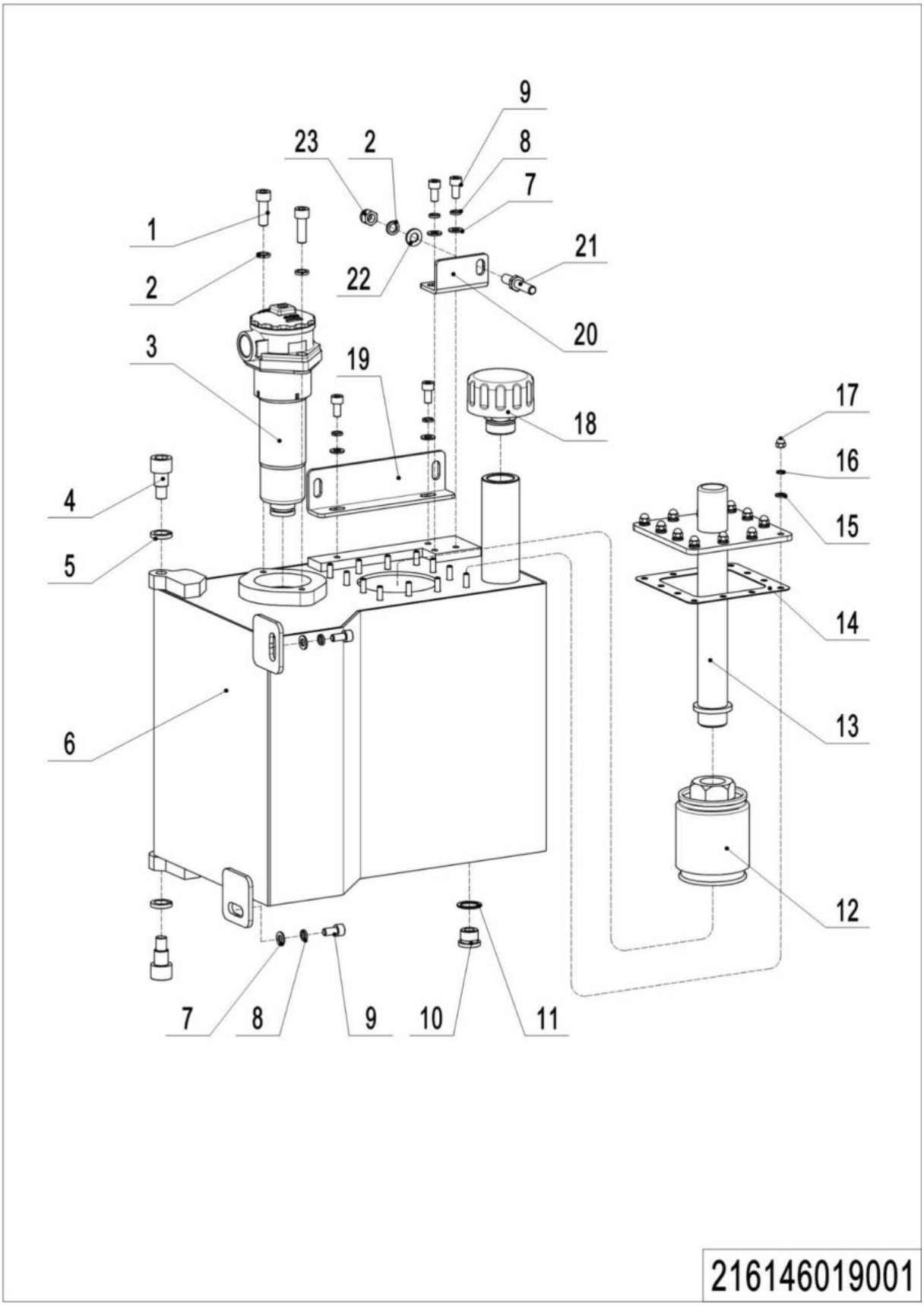

1= Supply as package. 2= Supply with constraints. 3= Phasing-out supply. 4= Supply as assembly. 5= Check other tables.

06 Oil Tank (216146019001)

No.	Item Code	Mark	Item Description	Qty.	Substitute	Note
1	910200200077		Screw	2		
2	910400500007		Spring Washer	3		
3	951000300005		Filter	1		
4	216119020011		Screw	2		
5	910400500010		Spring Washer	2		
6	216119010000		Tank	1		
7	910400500006		Spring Washer	6		
8	910400200003		Flat Washer	6		
9	910200200055		Screw	6		
10	255019020015		Filler Plug	1		
11	910800900001		Bonded Washer	1		
12	951000400001		Filter	1		
13	216119010001		Close Plate	1		
14	212119020000		Sealing Gasket	1		
15	910400100005		Flat Washer	12		
16	910400500005		Spring Washer	12		
17	910301000004		Nut	12		
18	212119020019		Cap-Tank	1		
19	216121520059		Fixing Plate	1		
20	216121520058		Fixing Plate	1		
21	255021020040		Lock Clip	1		
22	910400100007		Flat Washer	1		
23	910300100007		Nut	1		

1= Supply as package. 2= Supply with constraints. 3= Phasing-out supply. 4= Supply as assembly. 5= Check other tables.

07 Tilt Cylinder (212146020501)

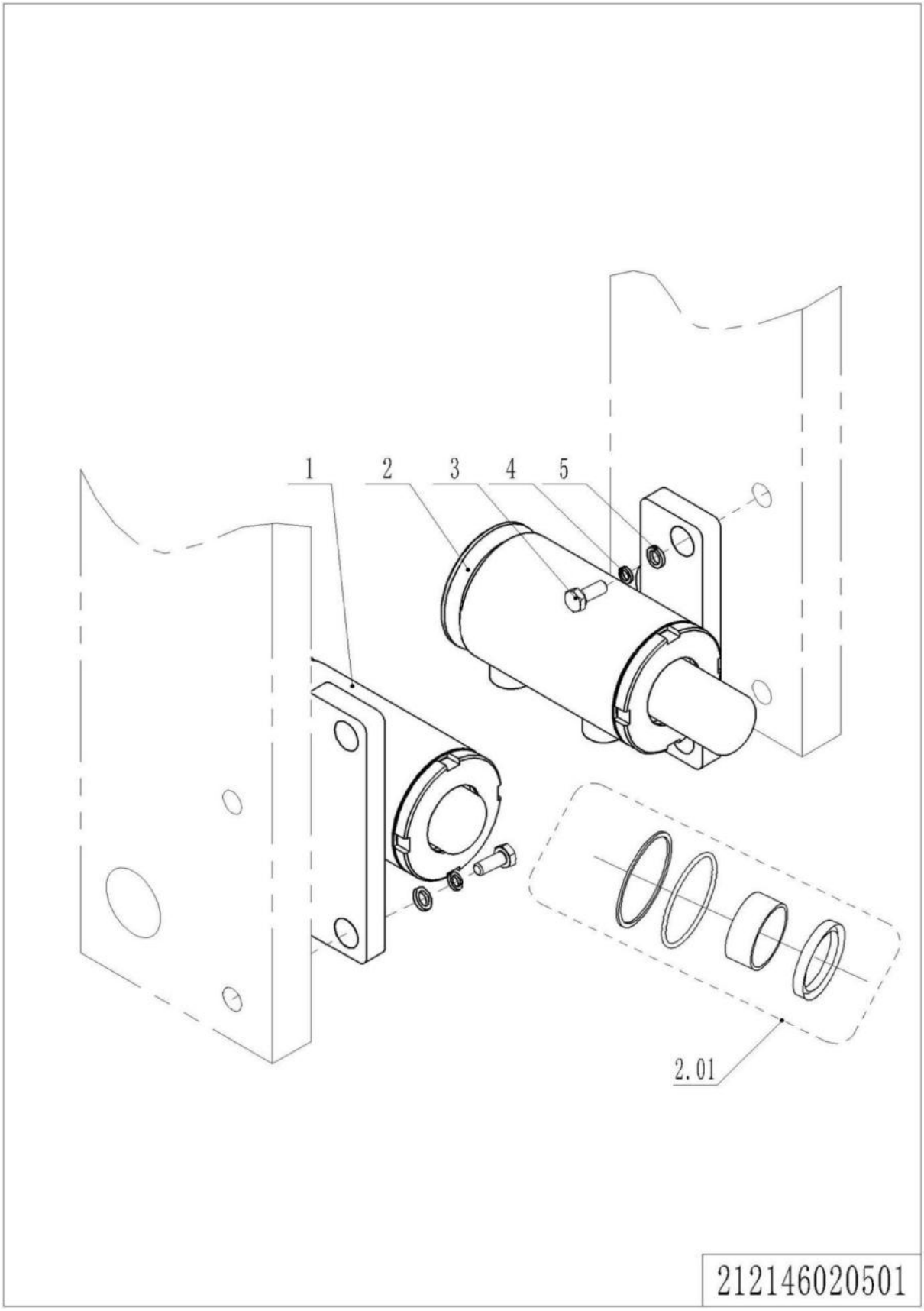

1= Supply as package. 2= Supply with constraints. 3= Phasing-out supply. 4= Supply as assembly. 5= Check other tables.

07 Tilt Cylinder (212146020501)

No.	Item Code	Mark	Item Description	Qty.	Substitute	Note
1	214120510001		Tilt Cylinder	1		
2	214120510000		Tilt Cylinder	1		
2.01	212198510000		Seal Kit	2		
3	910100300063	1	Bolt	4		
4	910400500009	1	Spring Washer	4		
5	910400100009	1	Flat Washer	4		

Chapter 3：Truck Frame

01 Chassis (216146021501)

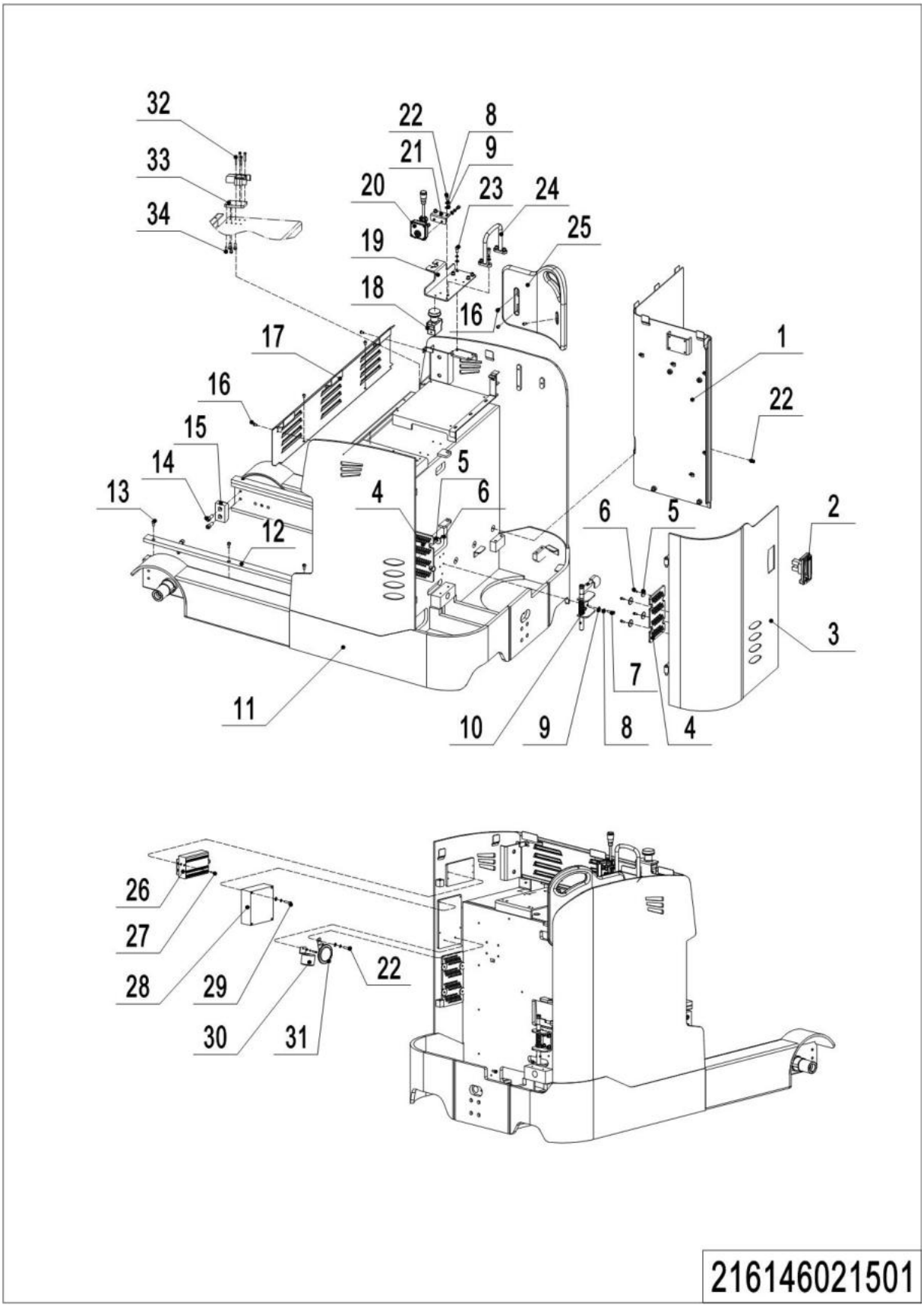

1= Supply as package. 2= Supply with constraints. 3= Phasing-out supply. 4= Supply as assembly. 5= Check other tables.

01 Chassis (216146021501)

No.	Item Code	Mark	Item Description	Qty.	Substitute	Note
1	216121510001		Close Plate	1		
2	255021010009		Lock	1		
3	216121510003		Side Door	1		
4	216121520057		Vent	2		
5	216121520061		Washer	8		
6	910200200033		Screw	8		
7	910200200058		Screw	4		
8	910400500006		Spring Washer	15		
9	910400100006		Flat Washer	15		
10	216121501001		Handle	1		See216146021502
11	216121510000		Chassis	1		
12	216121520056		Guide Rail	2		
13	910200200055		Screw	14		
14	910200200098		Screw	4		
15	216521520001		Crash Pad	2		
16	941100100001		Screw	5		
17	216121510002		Vent	1		
18	920200100001		Emergency Button	1		
19	216121520062		Mounting Plate	1		
20	921700100027		Accelerator	1		
21	216112152006		Fixing Plate	1		
22	910200200053		Screw	6		
23	910200200056		Screw	8		
24	216121510006		Handrail	1		
25	216121520055		Backrest	1		
26	921900100014		Converter	1		
27	910200300011		Screw	5		
28	921400100165		Controller	1		
29	910200200036		Screw	4		
30	920500100017		Horn	1		

1= Supply as package. 2= Supply with constraints. 3= Phasing-out supply. 4= Supply as assembly. 5= Check other tables.

01 Chassis (216146021501) Continuation 1

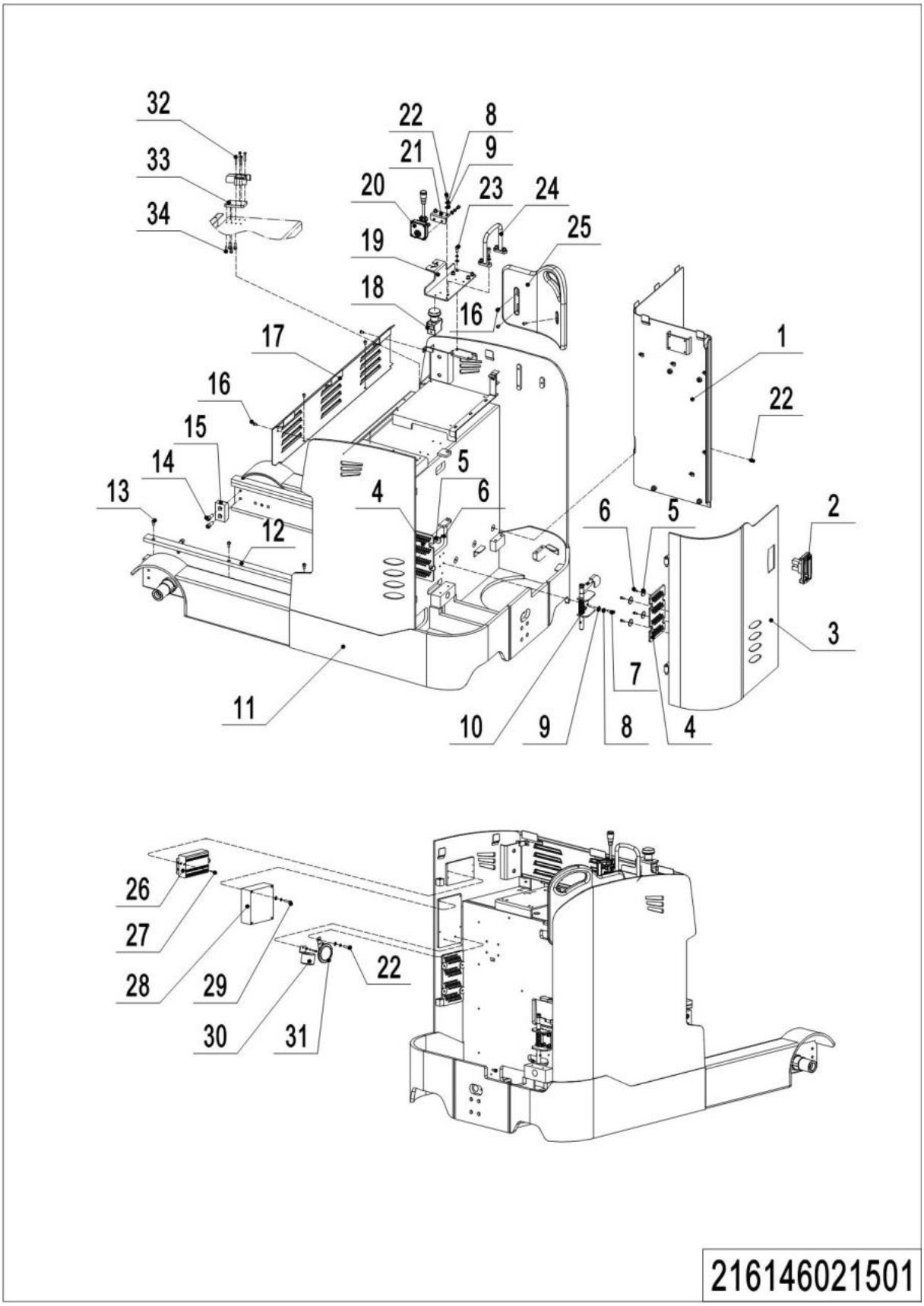

1= Supply as package. 2= Supply with constraints. 3= Phasing-out supply. 4= Supply as assembly. 5= Check other tables.

01 Chassis (216146021501) Continuation 1

No.	Item Code	Mark	Item Description	Qty.	Substitute	Note
31	920500100001		Horn	1		
32	910200200041		Screw	4		
33	216121520060		Fixing Plate	1		
34	910200200035		Screw	4		

02 Handle Assembly (216146021502)

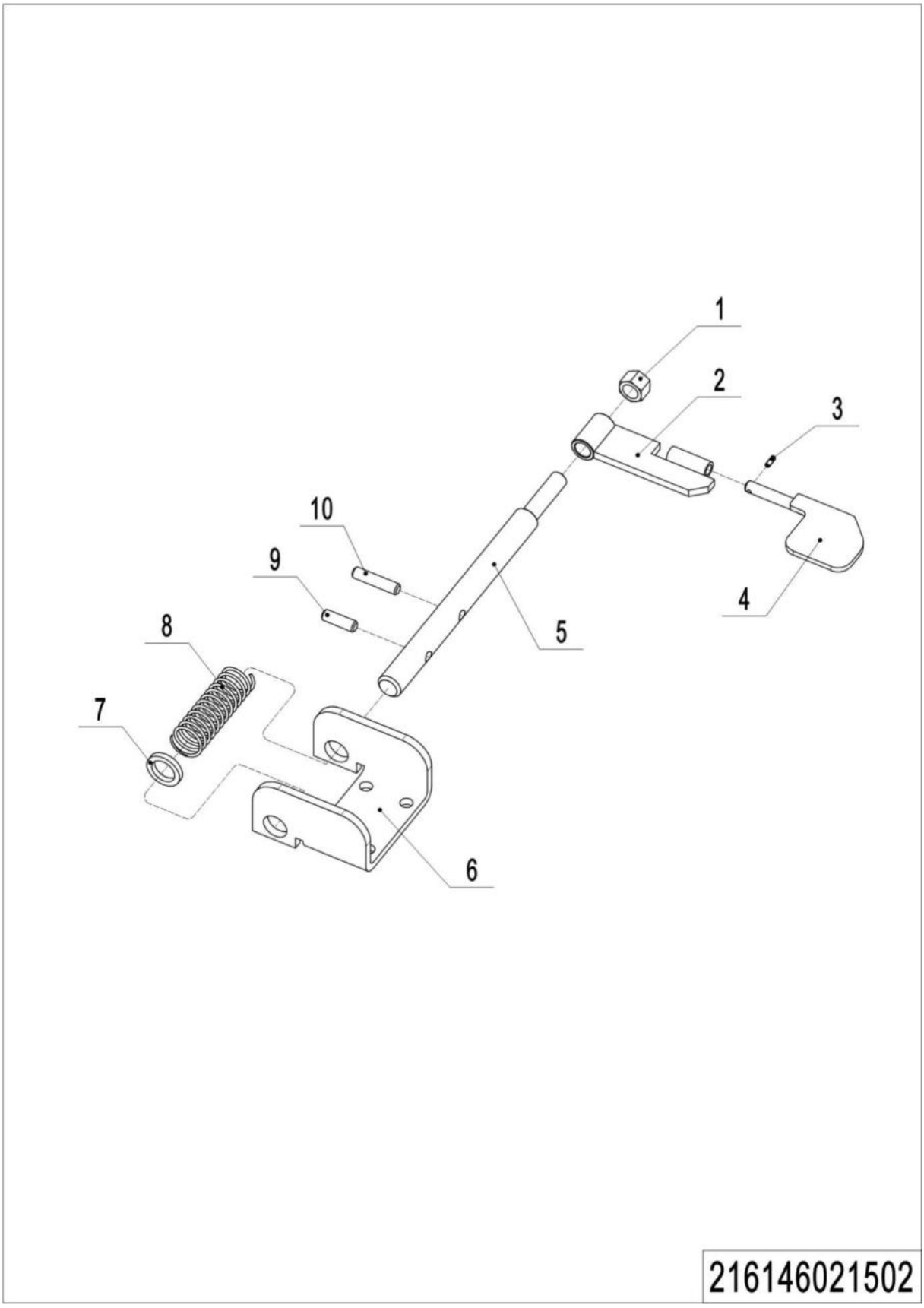

1= Supply as package. 2= Supply with constraints. 3= Phasing-out supply. 4= Supply as assembly. 5= Check other tables.

02 Handle Assembly (216146021502)

No.	Item Code	Mark	Item Description	Qty.	Substitute	Note
1	910300500014		Nut	1		
2	216121510004		Fixing Base	1		
3	910600400002		Spring Pin	1		
4	216121510005		Handle	1		
5	216121520039		Axle	1		
6	216121520040		Fixing Plate	1		
7	212121520052		Washer	1		
8	212121520051		Spring	1		
9	910600400044		Spring Pin	1		
10	910600400046		Spring Pin	1		

03 Overhead Guard (216146022001)

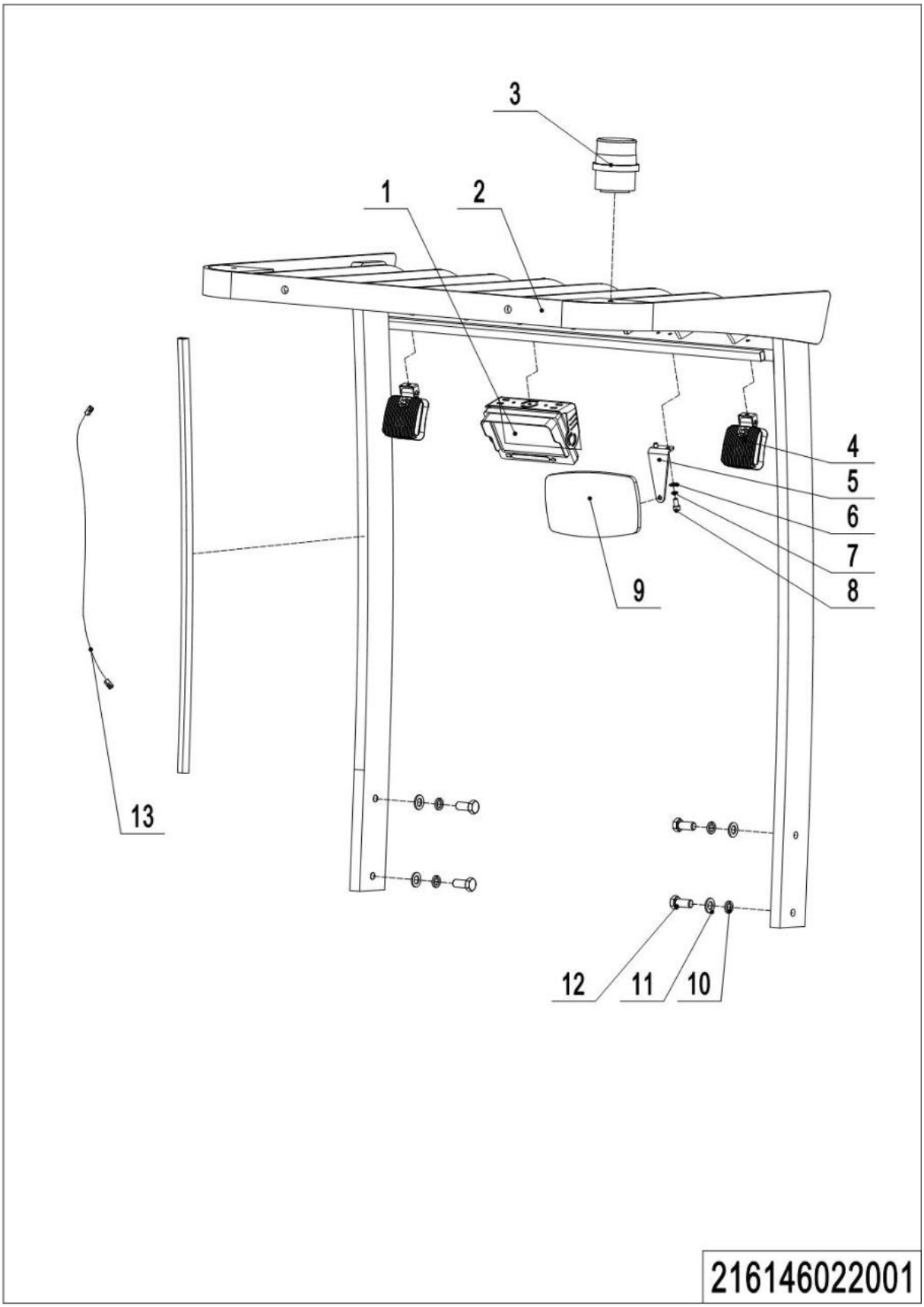

1= Supply as package. 2= Supply with constraints. 3= Phasing-out supply. 4= Supply as assembly. 5= Check other tables.

03 Overhead Guard (216146022001)

No.	Item Code	Mark	Item Description	Qty.	Substitute	Note
1	921100100058		Display	1		
2	216122010000		Overhead Guard	1		
3	922000100059		Lamp	1		
4	922000100058		Lamp	2		
5	216122020008		Mounting Plate	1		
6	910400100006		Flat Washer	2		
7	910400500006		Spring Washer	2		
8	910200200055		Screw	2		
9	251149520001		Rearview Mirror	1		
10	910400100010		Flat Washer	4		
11	910400500010		Spring Washer	4		
12	910100300069		Bolt	4		
13	921500100222		Wire	1		

04 Platform (216146018001)

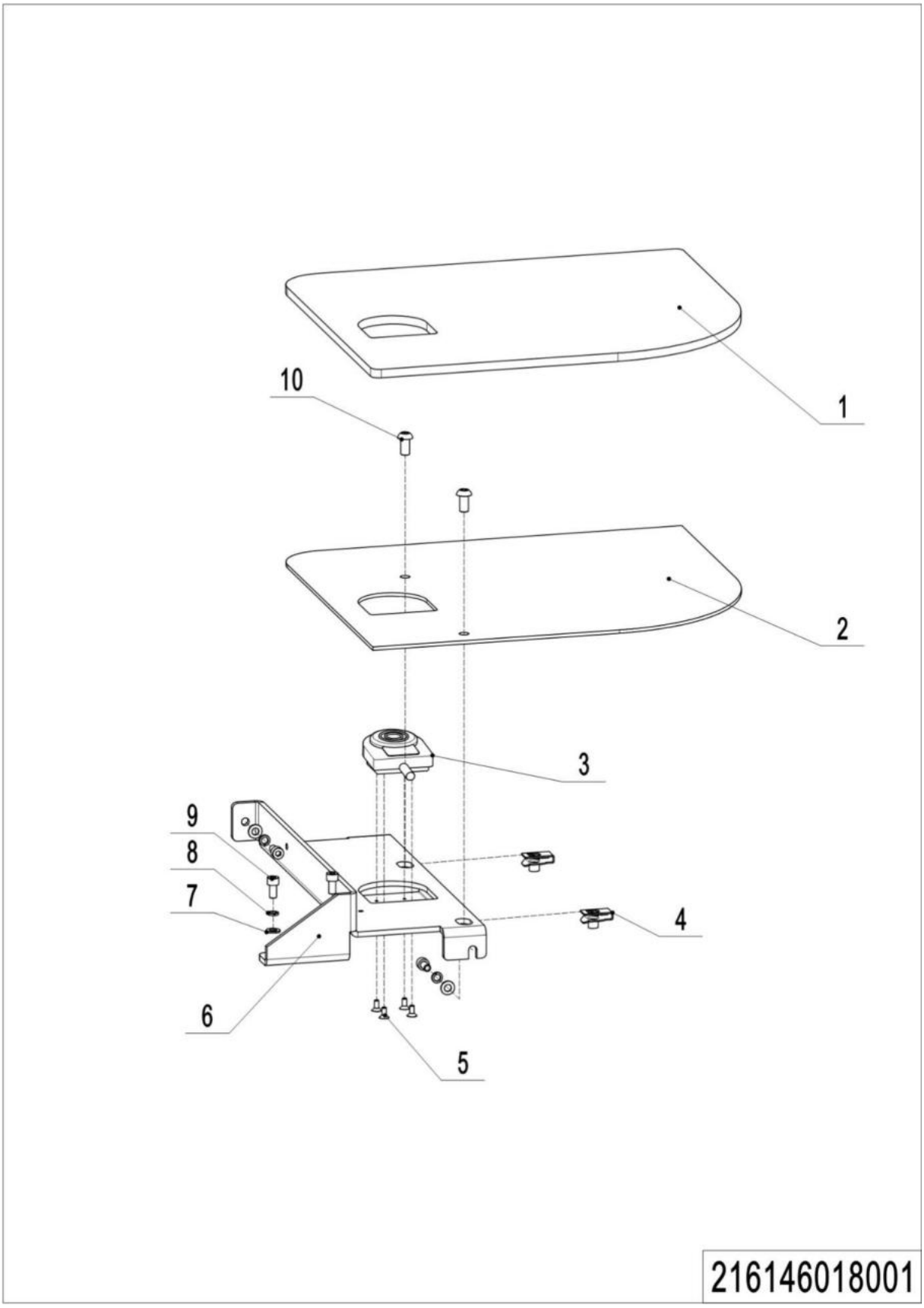

1= Supply as package. 2= Supply with constraints. 3= Phasing-out supply. 4= Supply as assembly. 5= Check other tables.

04 Platform (216146018001)

No.	Item Code	Mark	Item Description	Qty.	Substitute	Note
1	216118020001		Pedal Pad	1		
2	216118020000		Platform	1		
3	216133010017		Switch	1		
4	940400400003		Cage Nut	2		
5	910200500038		Screw	4		
6	216118010000		Bracket	1		
7	910400100006		Flat Washer	5		
8	910400500006		Spring Washer	5		
9	910200200055		Screw	5		
10	941100100007		Screw	2		

1= Supply as package. 2= Supply with constraints. 3= Phasing-out supply. 4= Supply as assembly. 5= Check other tables.

Chapter 4： Mast

01 Outer Mast (216146044501)

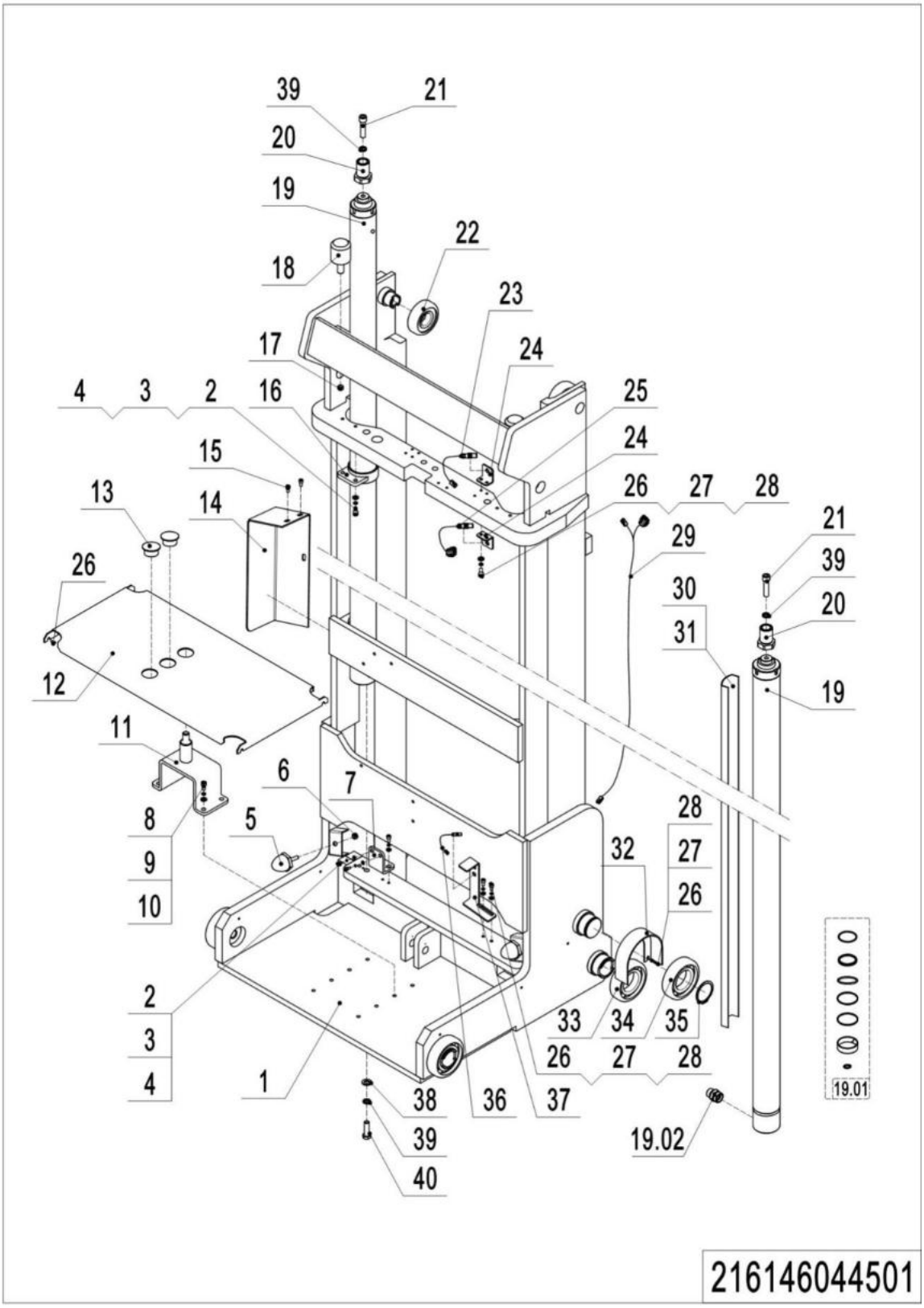

01 Outer Mast (216146044501)

No.	Item Code	Mark	Item Description	Qty.	Substitute	Note
1	216144510005		Outer Mast	1		4500
1	216144510006		Outer Mast	1		5000
1	216144510007		Outer Mast	1		5500
1	216144510008		Outer Mast	1		6000
1	216144510009		Outer Mast	1		6500
1	216144510010		Outer Mast	1		7000
2	910200200058		Screw	6		
3	910400500006		Spring Washer	6		
4	910400100006		Flat Washer	6		
5	212144520242		Crash Pad	2		
6	910300500005		Nut	2		
7	212144520062		Fixing Plate	1		
8	910200200076		Screw	4		
9	910400500007		Spring Washer	4		
10	910400100007		Flat Washer	4		
11	216144510000		Pin	1		
12	216144520010		Close Plate	1		
13	272521521086		Plug	2		
14	216144520009		Protective Cover	1		
15	941100100001		Screw	3		
16	212144510048		Fixing Base	2		
17	910300500008		Nut	2		
18	212144520065		Crash Pad	2		
19	212144510055		Cylinder	2		4500
19	212144510056		Cylinder	2		5000
19	212144510057		Cylinder	2		5500
19	212144510058		Cylinder	2		6000
19	212144510059		Cylinder	2		6500
19	212144510060		Cylinder	2		7000
19.01	212198510002		Seal Kit	1		

01 Outer Mast (216146044501) Continuation 1

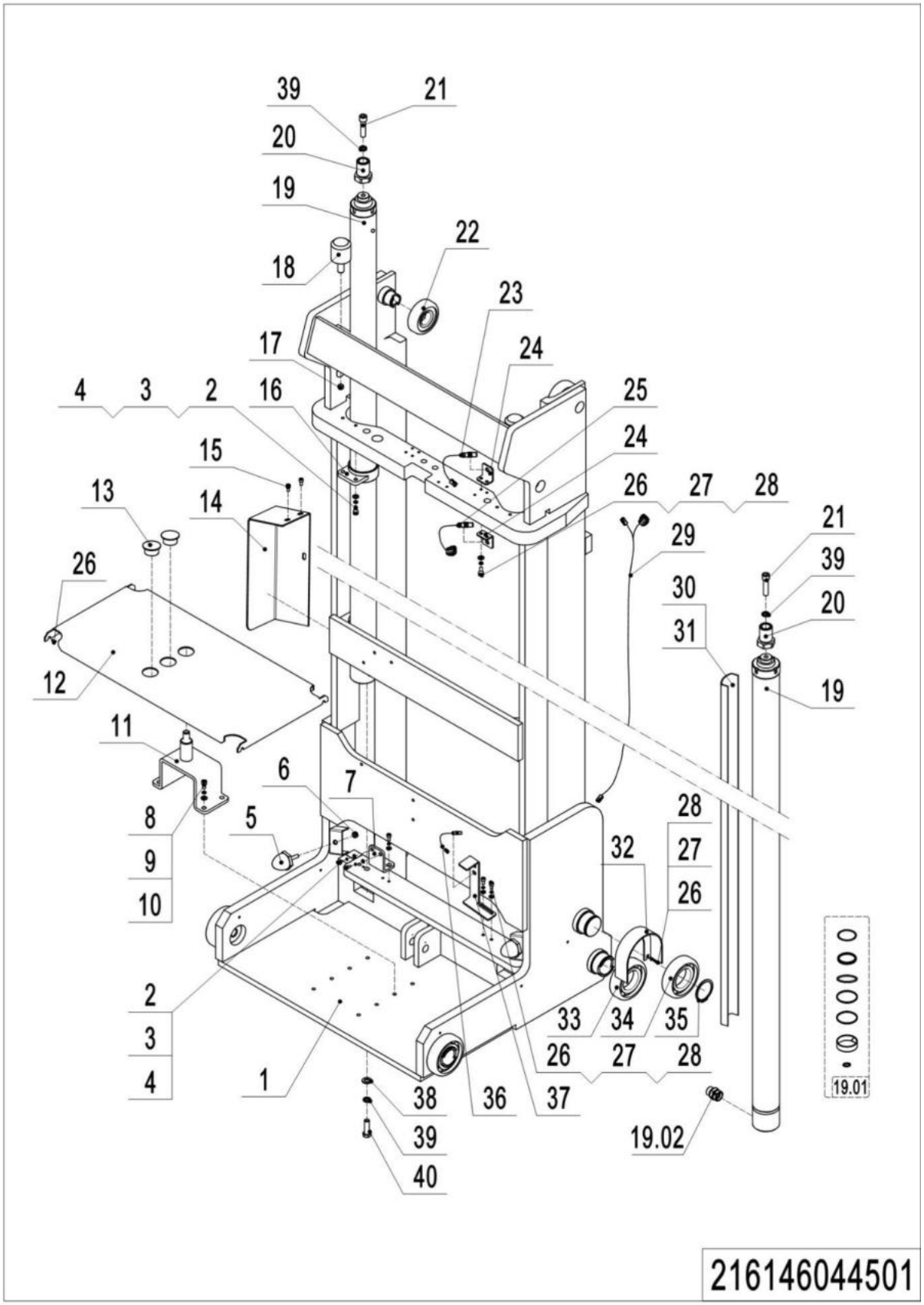

1= Supply as package. 2= Supply with constraints. 3= Phasing-out supply. 4= Supply as assembly. 5= Check other tables.

01 Outer Mast (216146044501) Continuation 1

No.	Item Code	Mark	Item Description	Qty.	Substitute	Note
19.02	212198520022		Anti-explosion Valve	1		
20	212144520060		Barrel	2		
21	910100300054		Bolt	2		
22	940200300052		Compound Roller	2		Φ89.6，most used
22	940200300056		Compound Roller			Φ89.2
22	940200300043		Compound Roller			Φ90
23	216133010041		Proximity Switch	1		OP6L
24	212144520061		Fixing Plate	2		
25	216133010040		Proximity Switch	1		OP6L
26	910200200035		Screw	16		
27	910400500005		Spring Washer	12		
28	910400100005		Flat Washer	12		
29	216133010015		Wiring Harness	1		Wire length 2650
29	216133010015		Wiring Harness	1		Wire length 2800
29	216133010015		Wiring Harness	1		Wire length 2950
29	216133010015		Wiring Harness	1		Wire length 3100
29	216133010015		Wiring Harness	1		Wire length 3300
29	216133010015		Wiring Harness	1		Wire length 3450
30	212144520252		Shield	1		a few
31	911000600007		Hose Clamp	6		a few
32	212144510081		Protective Cover	2		
33	940200300042		Compound Roller	4		
34	940200100042		Main Roller	2		
35	910401300026		Circlip	2		
36	216133010042		Proximity Switch	1		CP6L
37	212144520297		Mounting Plate	1		
38	910400100007		Flat Washer	4		
39	910400500007		Spring Washer	4		
40	910200200076		Screw	4		

02 Middle Mast (216146044502)

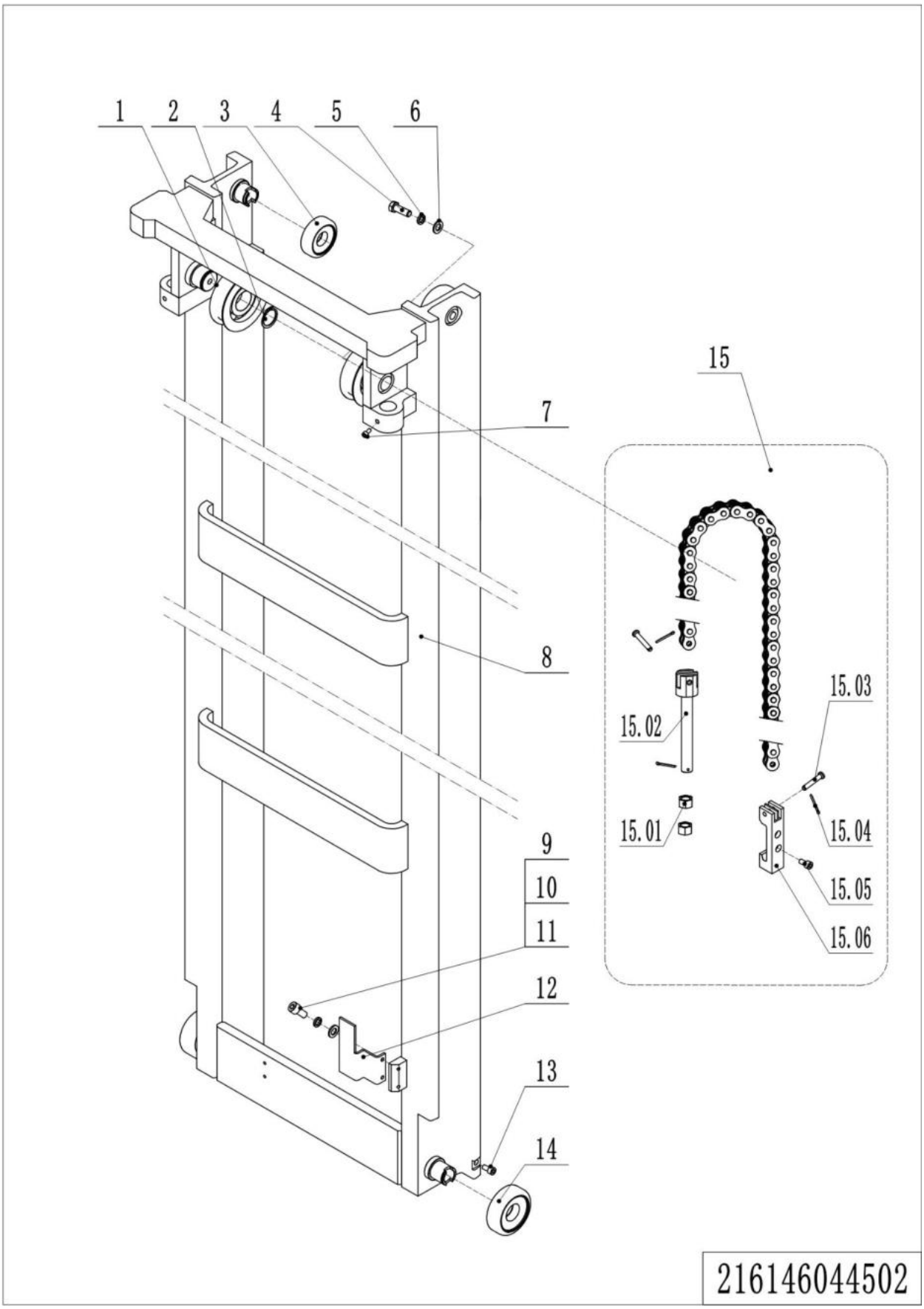

1= Supply as package. 2= Supply with constraints. 3= Phasing-out supply. 4= Supply as assembly. 5= Check other tables.

02 Middle Mast (216146044502)

No.	Item Code	Mark	Item Description	Qty.	Substitute	Note
1	940200500001		Sprocket Bearing	2		
2	910401300020		Circlip	2		
3	940200300034		Compound Roller	2		Φ89.27，most used
3	940200300051		Compound Roller			Φ88.7
3	940200300044		Compound Roller			Φ90.1
4	910100300051		Bolt	1		
5	910400500008		Spring Washer	1		
6	910400100008		Flat Washer	1		
7	910200900014		Screw	2		
8	212144510020		Middle Mast(4500)	1		4500
8	212144510021		Middle Mast(5000)	1		5000
8	212144510022		Middle Mast(5500)	1		5500
8	212144510023		Middle Mast(6000)	1		6000
8	212144510024		Middle Mast(6500)	1		6500
8	212144510025		Middle Mast(7000)	1		7000
9	910200200036		Screw	2		
10	910400500005		Spring Washer	2		
11	910400100005		Flat Washer	2		
12	212144520066		Fixing Plate	1		
13	910200200096		Screw	2		
14	940200300052		Compound Roller	2		Φ89.6，most used
14	940200300056		Compound Roller			Φ89.2
14	940200300043		Compound Roller			Φ90
15	212144510101		Chain	2		4500
15	212144510102		Chain	2		5000
15	212144510103		Chain	2		5500
15	212144510104		Chain	2		6000
15	212144510105		Chain	2		6500
15	212144510106		Chain	2		7000
15.01	910300200008		Nut	2		

02 Middle Mast (216146044502) Continuation 1

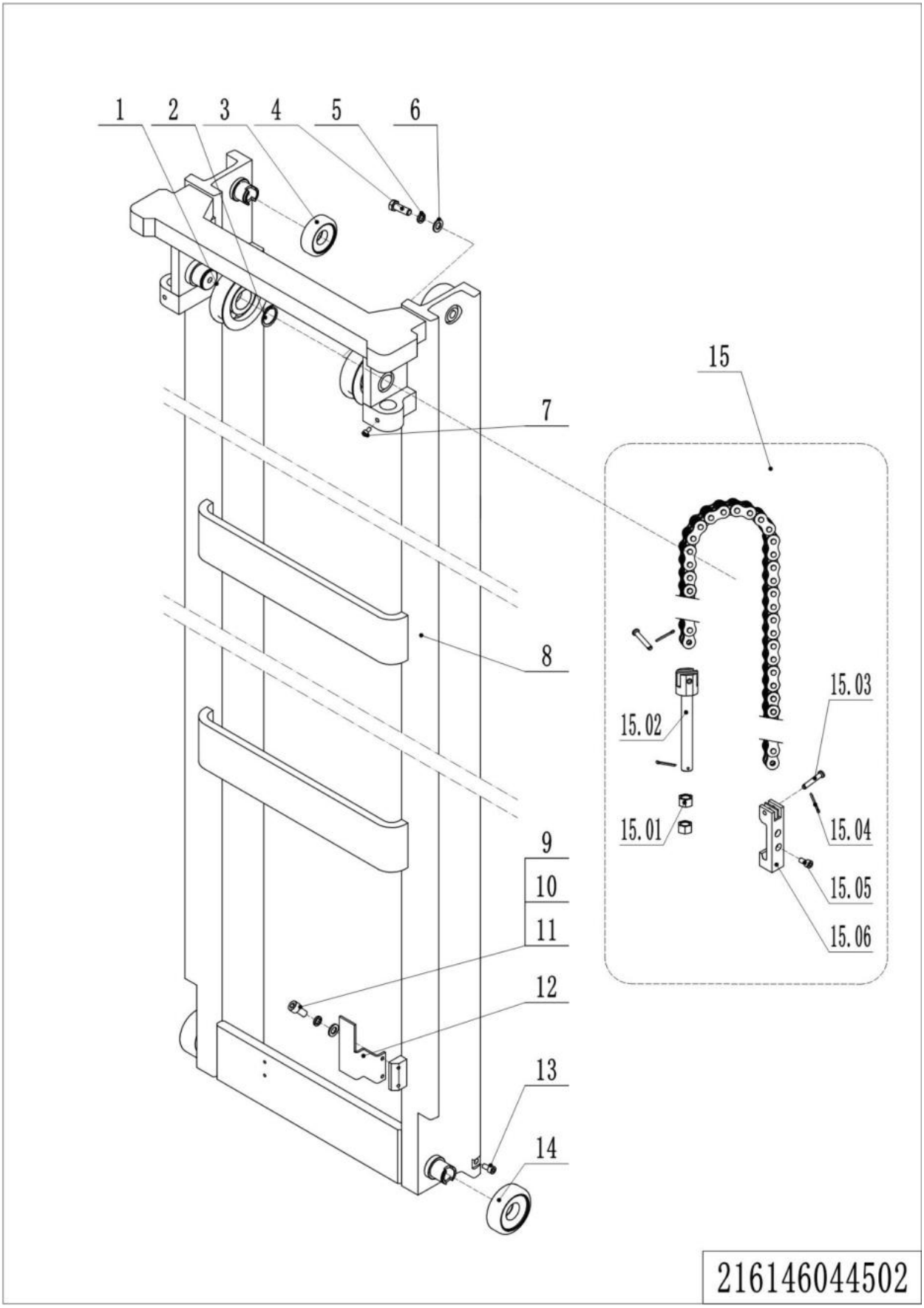

1= Supply as package. 2= Supply with constraints. 3= Phasing-out supply. 4= Supply as assembly. 5= Check other tables.

02 Middle Mast (216146044502) Continuation 1

No.	Item Code	Mark	Item Description	Qty.	Substitute	Note
15.02	941300100012		Chain Bolt	1		
15.03	941100800008		Pin	2		
15.04	910600600030		Cotter Pin	3		
15.05	910200200058		Screw	2		
15.06	212144520081		Anchor	1		

03 Inner Mast (216146044503)

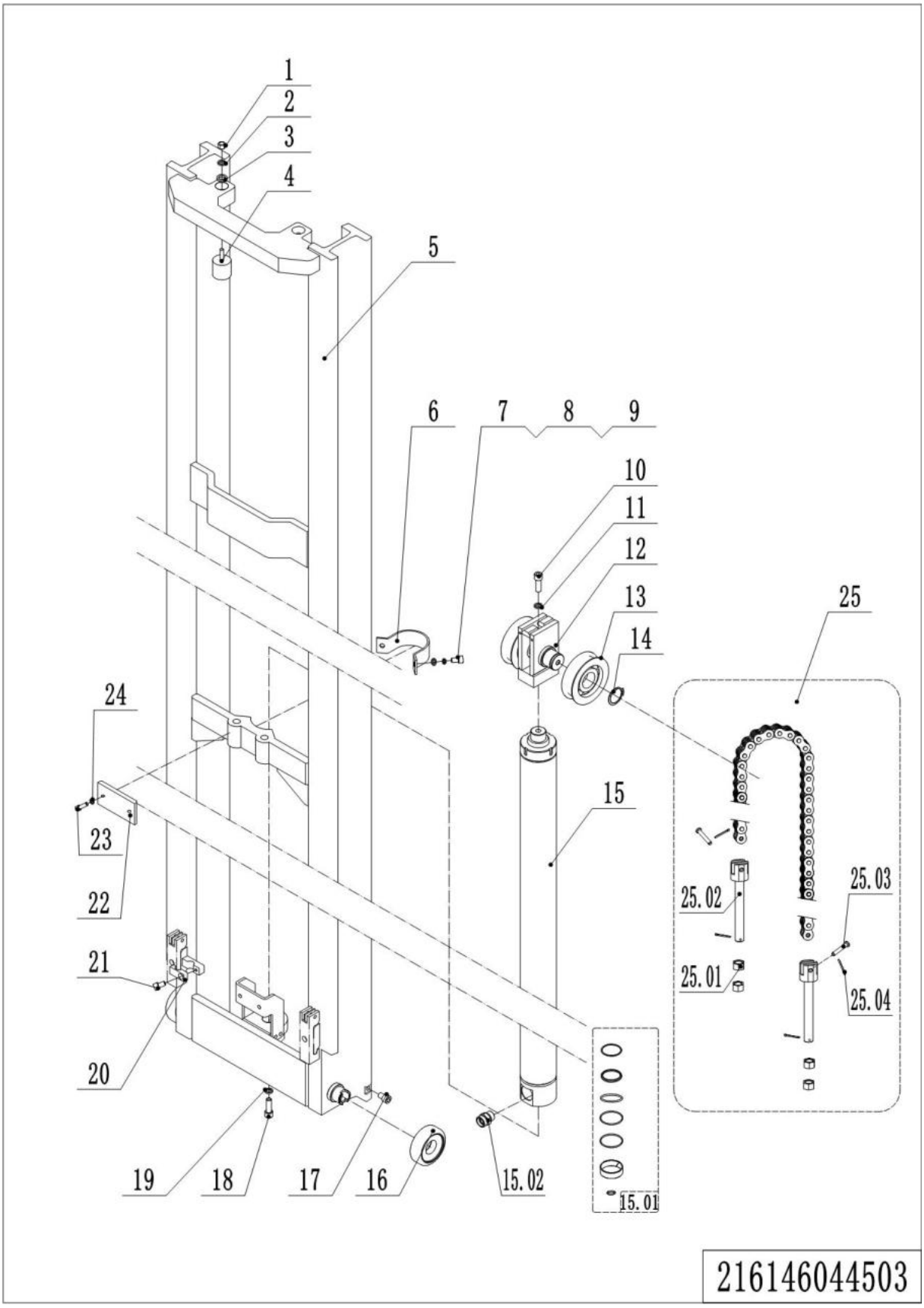

03 Inner Mast (216146044503)

No.	Item Code	Mark	Item Description	Qty.	Substitute	Note
1	910300500004		Nut	2		
2	910400500006		Spring Washer	3		
3	910400100006		Flat Washer	2		
4	212144520242		Crash Pad	2		
5	212145510035		Inner Mast	1		4500
5	212145510036		Inner Mast	1		5000
5	212145510037		Inner Mast	1		5500
5	212145510038		Inner Mast	1		6000
5	212145510039		Inner Mast	1		6500
5	212145510040		Inner Mast	1		7000
6	212144520068		Fixing Plate	1		
7	910100200005		Bolt	2		
8	910400500007		Spring Washer	2		
9	910400100007		Flat Washer	2		
10	910200200099		Screw	2		
11	910400500008		Spring Washer	4		
12	212144510049		Yoke	1		
13	940200500001		Sprocket Bearing	2		
14	910401300020		Circlip	2		
15	212144510070		Cylinder	1		4500
15	212144510071		Cylinder	1		5000
15	212144510072		Cylinder	1		5500
15	212144510073		Cylinder	1		6000
15	212144510074		Cylinder	1		6500
15	212144510075		Cylinder	1		7000
15.01	212198510003		Seal Kit	1		
15.02	212198520036		Anti-explosion Valve	1		
16	940200300034		Compound Roller	2		Φ89.27，most used
16	940200300051		Compound Roller			Φ88.7
16	940200300044		Compound Roller			Φ90.1

03 Inner Mast (216146044503) Continuation 1

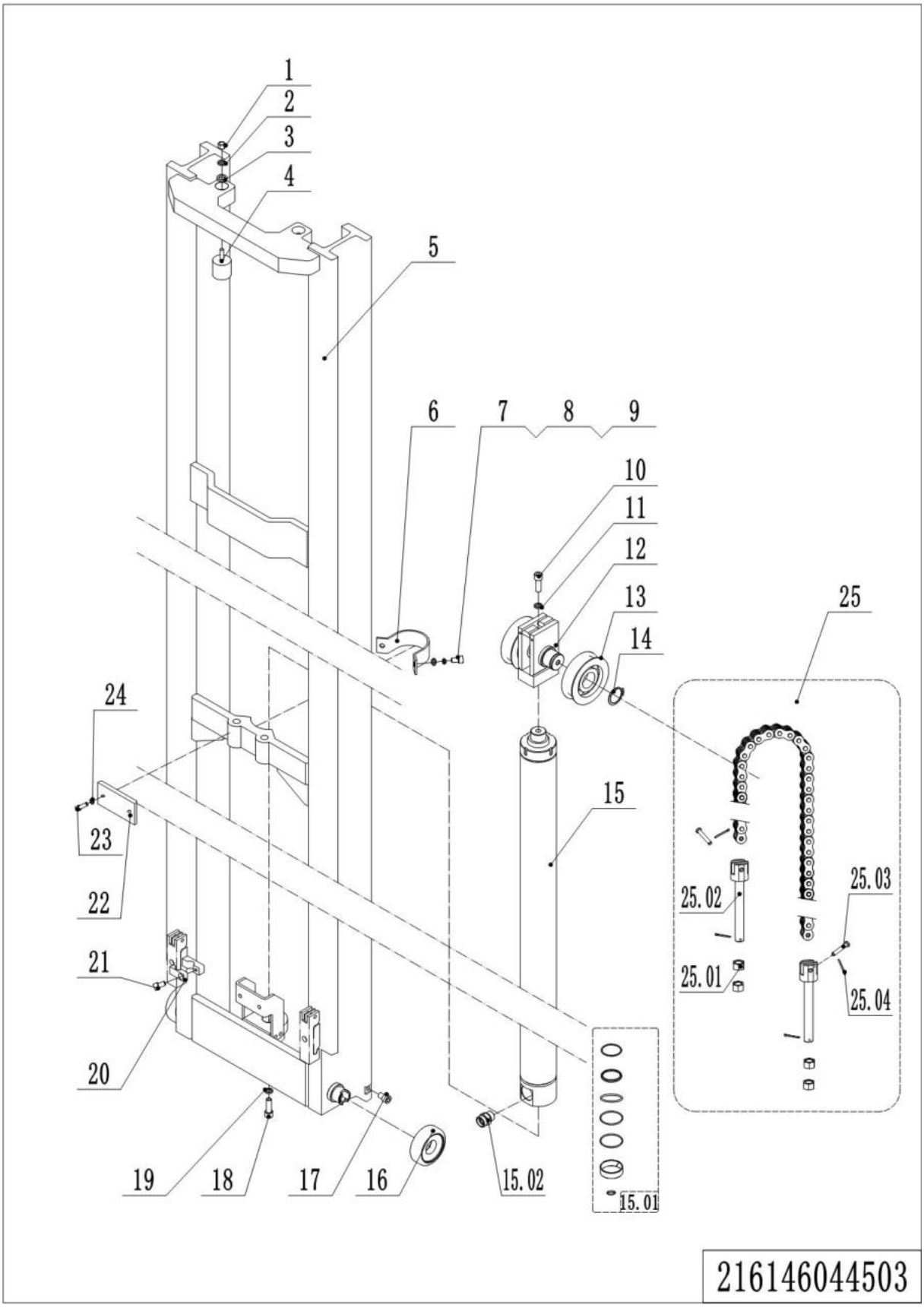

03 Inner Mast (216146044503) Continuation 1

No.	Item Code	Mark	Item Description	Qty.	Substitute	Note
17	910200200096	1	Screw	2		
18	910100200005	1	Bolt	1		
19	910400100008	1	Flat Washer	1		
20	213044520110		Pipe Clip	1		
21	910200200055	1	Screw	1		
22	212144520236		Press Plate	1		
23	910200500051	1	Screw	2		
24	910400500005	1	Spring Washer	2		
25	212144510090		Chain	2		4500
25	212144510091		Chain	2		5000
25	212144510092		Chain	2		5500
25	212144510093		Chain	2		6000
25	212144510094		Chain	2		6500
25	212144510095		Chain	2		7000
25.01	910300200008		Nut	4		
25.02	941300100012		Chain Bolt	2		
25.03	941100800008		Pin	2		
25.04	910600600030		Cotter Pin	4		

1= Supply as package. 2= Supply with constraints. 3= Phasing-out supply. 4= Supply as assembly. 5= Check other tables.

04 Fork Carriage (216146044504)

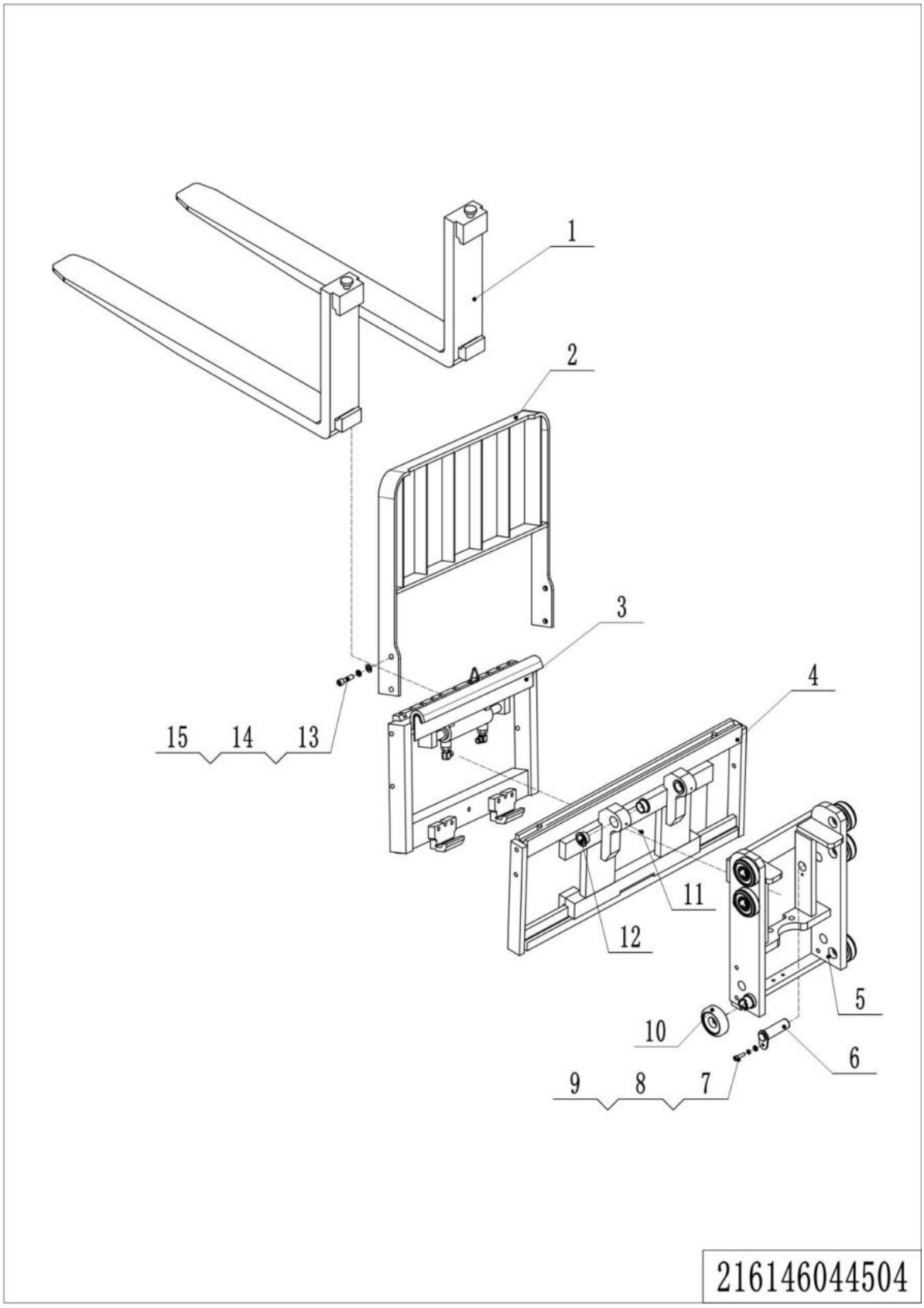

1= Supply as package. 2= Supply with constraints. 3= Phasing-out supply. 4= Supply as assembly. 5= Check other tables.

04 Fork Carriage (216146044504)

No.	Item Code	Mark	Item Description	Qty.	Substitute	Note
1	940100100003		Fork100x35x1070	2		
1	940100100004		Fork100x35x1150	2		
1	940100100005		Fork100x35x1220	2		
1	940100100006		Fork100x35x1370	2		
1	940100100029		Fork100x35x1520	2		
1	940100100049		Fork100x35x1070-side hole	2		Optional wireless camera
1	940100100050		Fork100x35x1150-side hole	2		Optional wireless camera
1	940100100051		Fork100x35x1220-side hole	2		Optional wireless camera
1	940100100053		Fork100x35x1370-side hole	2		Optional wireless camera
1	940100100054		Fork100x35x1520-side hole	2		Optional wireless camera
2	216540510001		Load Backrest	1		with sideshift
2	216140510000		Load Backrest	1		without sideshift
3	940100200008		Side Shifter	1		Optional
4	216138010000		Fork	1		
5	212138010000		Carriage	1		
6	212138010003		Pin	2		
7	910200300025		Screw	2		
8	910400100006		Flat Washer	2		
9	910400500019		Spring Washer	2		
10	940200300034		Compound Roller	2		Φ89.27，most used
10	940200300051		Compound Roller			Φ88.7
10	940200300044		Compound Roller			Φ90.1
11	911200100002		Oil Cup	2		
12	940500400013		Bearing	4		
13	910100300050		Bolt	4		
14	910400500008		Spring Washer	4		
15	910400100008		Flat Washer	4		

05 Four Way Hydraulic Circuit of Mast (216146044505)

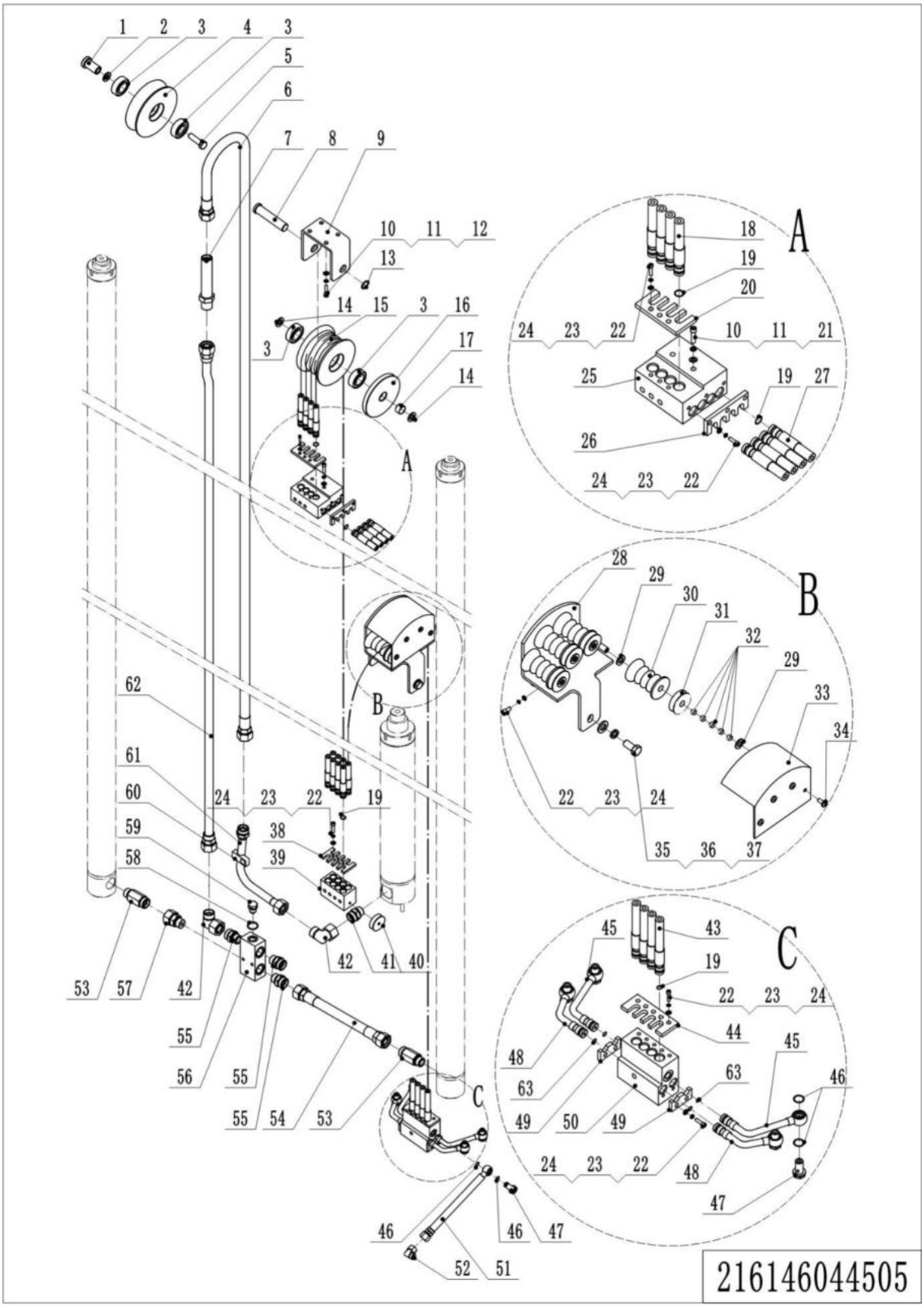

1= Supply as package. 2= Supply with constraints. 3= Phasing-out supply. 4= Supply as assembly. 5= Check other tables.

05 Four Way Hydraulic Circuit of Mast (216146044505)

No.	Item Code	Mark	Item Description	Qty.	Substitute	Note
1	212144520051		Pin	1		
2	212144520052		Washer	1		
3	910700200019		Bearing	4		
4	212144520050		Pulley	1		
5	910100300057		Bolt	1		
6	212144520130		Hose	1		4500
6	212144520131		Hose	1		5000
6	212144520132		Hose	1		5500
6	212144520133		Hose	1		6000
6	212144520134		Hose	1		6500
6	212144520135		Hose	1		7000
7	950400500003		Joint	1		
8	212144520057		Pin	1		
9	212144520044		Mounting Base	1		
10	910400100006		Flat Washer	10		
11	910400500006		Spring Washer	15		
12	910200200058		Screw	13		
13	910401300011		Circlip	1		
14	212144520056		Washer	2		
15	212144520053		Pulley	1		
16	212144520054		Pulley	1		
17	940500100016		Bushing	1		
18	212144520100		Hose	4		4500
18	212144520101		Hose	4		5000
18	212144520102		Hose	4		5500
18	212144520103		Hose	4		6000
18	212144520104		Hose	4		6500
18	212144520105		Hose	4		7000
19	910800100124		O-Ring	26		
20	212144520045		Plate	1		

05 Four Way Hydraulic Circuit of Mast (216146044505)

Continuation 1

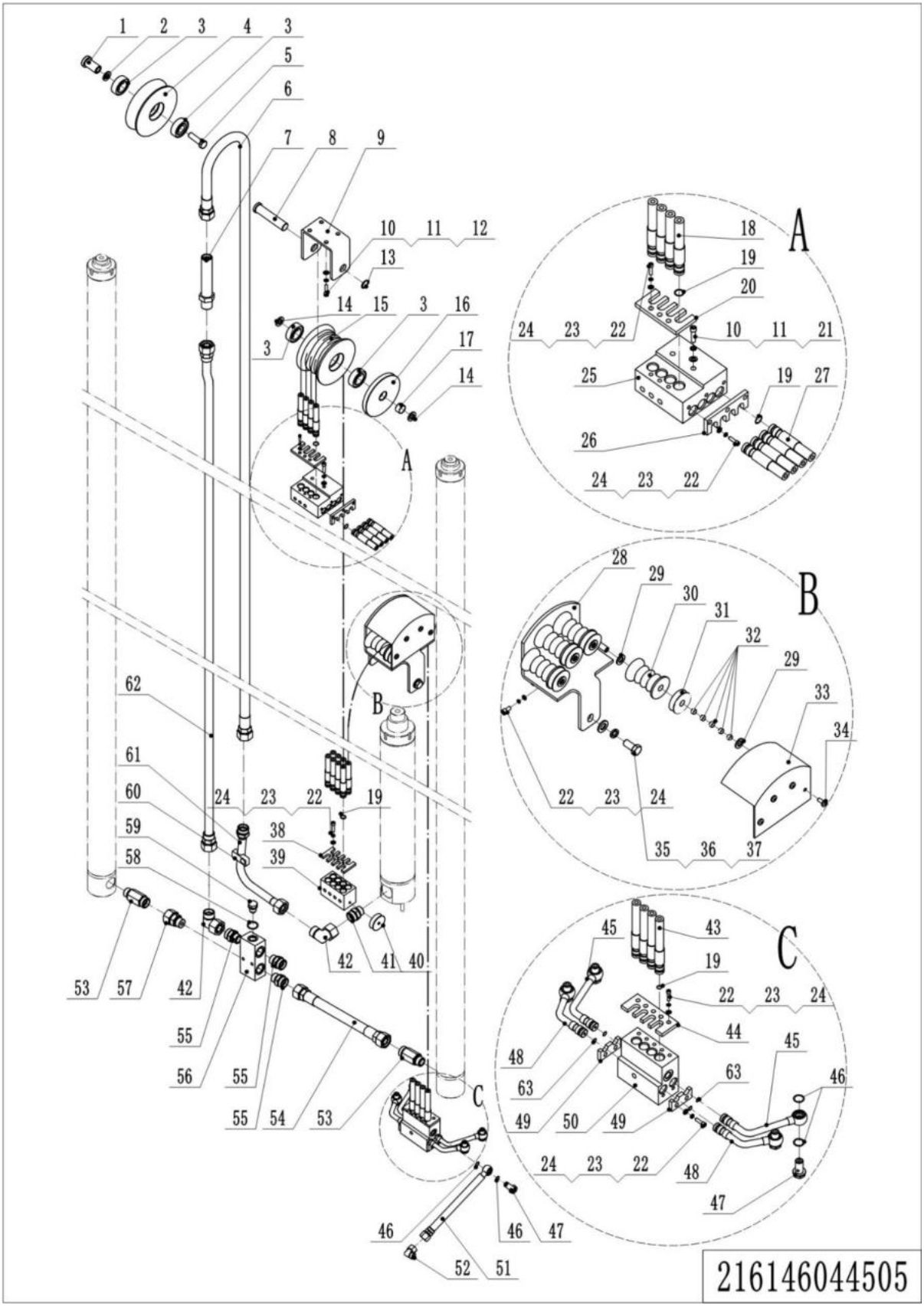

1= Supply as package. 2= Supply with constraints. 3= Phasing-out supply. 4= Supply as assembly. 5= Check other tables.

05 Four Way Hydraulic Circuit of Mast (216146044505) Continuation 1

No.	Item Code	Mark	Item Description	Qty.	Substitute	Note
21	910200200062		Screw	2		
22	910200200035		Screw	16		
23	910400500005		Spring Washer	16		
24	910400100005		Flat Washer	16		
25	212144520047		Valve Block	1		
26	212144520046		Plate	1		
27	216144520015		Hose	4		4500
27	216144520016		Hose	4		5000
27	216144520017		Hose	4		5500
27	216144520018		Hose	4		6000
27	216144520019		Hose	4		6500
27	216144520020		Hose	4		7000
28	212144510047		Wheel Casing	1		
29	910400100007		Flat Washer	8		
30	212144520058		Pulley	4		
31	212144520059		Pulley	4		
32	940500100079		Bushing	20		
33	212144510046		Wheel Casing	1		
34	910200500052		Screw	4		
35	910100300048		Bolt	2		
36	910400500008		Spring Washer	3		
37	910400100008		Flat Washer	2		
38	212144520040		Plate	1		
39	212144520039		Valve Block	1		
40	212144520037		Pulley	1		
41	212198520036		Anti-explosion Valve	1		
42	950400200006		Joint	2		
43	212144520085		Hose	4		4500
43	212144520086		Hose	4		5000
43	212144520087		Hose	4		5500

05 Four Way Hydraulic Circuit of Mast (216146044505)

Continuation 2

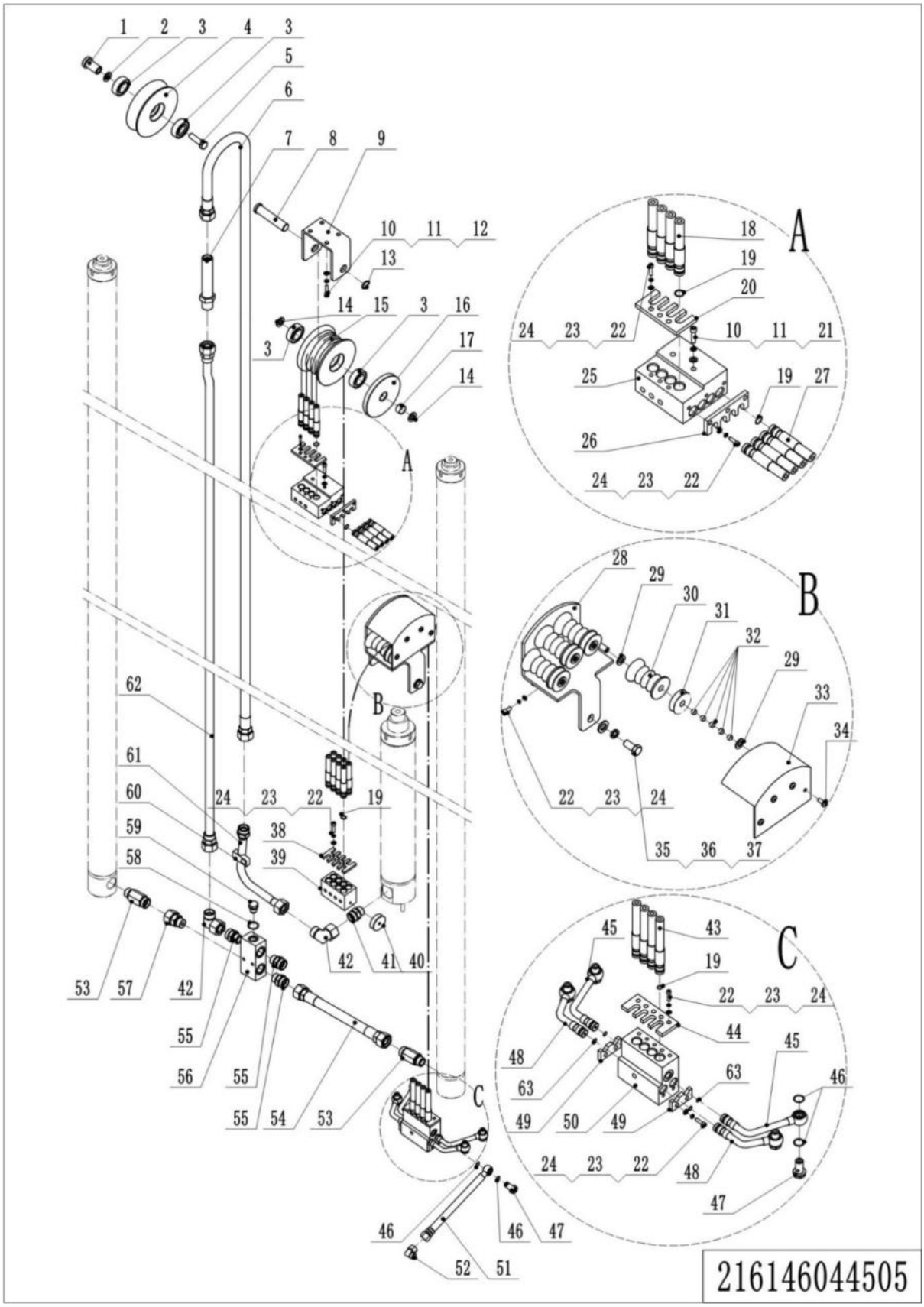

1= Supply as package. 2= Supply with constraints. 3= Phasing-out supply. 4= Supply as assembly. 5= Check other tables.

05 Four Way Hydraulic Circuit of Mast (216146044505) Continuation 2

No.	Item Code	Mark	Item Description	Qty.	Substitute	Note
43	212144520088		Hose	4		6000
43	212144520089		Hose	4		6500
43	212144520090		Hose	4		7000
44	212144520032		Plate	1		
45	212144520033		Steel Tube	2		
46	910800100125		O-Ring	4		
47	212144520042		Bolt	4		
48	212144520034		Steel Tube	2		
49	212144520031		Plate	2		
50	212144520030		Valve Block	1		
51	212144520035		Hose	2		
52	950400200001		Joint	2		
53	212198520022		Anti-explosion Valve	2		
54	212144520036		Hose	1		
55	950400400011		Joint	3		
56	212144520041		Valve Block	1		
57	950400100003		Joint	1		
58	910800900005		Bonded Washer	1		
59	911300100001		Screw Plug	1		
60	213044520110		Pipe Clip	1		
61	212144520048		Steel Tube	1		
62	212144520115		Steel Tube	1		4500
62	212144520116		Steel Tube	1		5000
62	212144520117		Steel Tube	1		5500
62	212144520118		Steel Tube	1		6000
62	212144520119		Steel Tube	1		6500
62	212144520120		Steel Tube	1		7000
63	910800100061		O-Ring	4		

06 Three Way Hydraulic Circuit of Mast (216146044506)

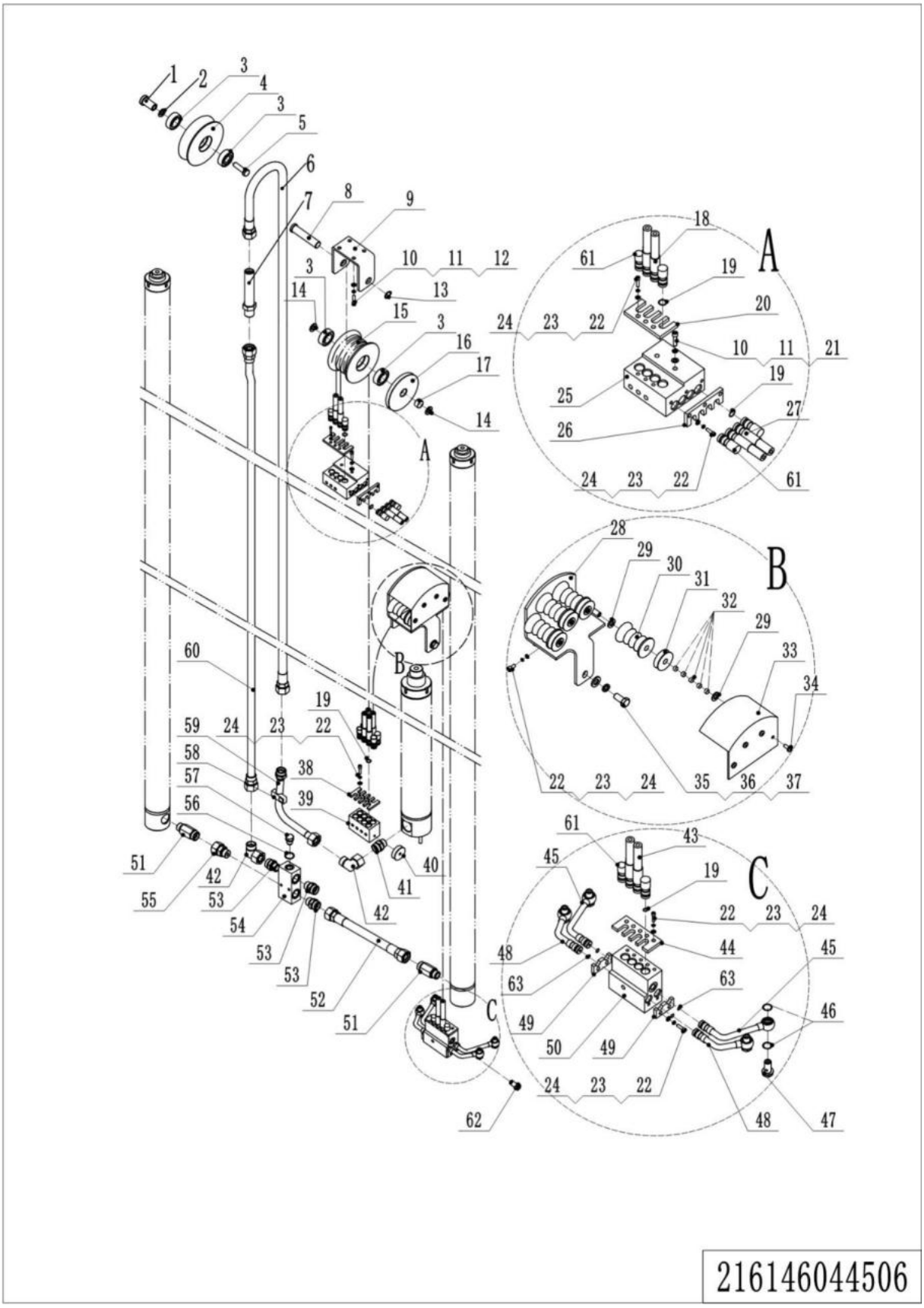

1= Supply as package. 2= Supply with constraints. 3= Phasing-out supply. 4= Supply as assembly. 5= Check other tables.

06 Three Way Hydraulic Circuit of Mast (216146044506)

No.	Item Code	Mark	Item Description	Qty.	Substitute	Note
1	212144520051		Pin	1		
2	212144520052		Washer	1		
3	910700200019		Bearing	4		
4	212144520050		Pulley	1		
5	910100300057		Bolt	1		
6	212144520130		Hose	1		4500
6	212144520131		Hose	1		5000
6	212144520132		Hose	1		5500
6	212144520133		Hose	1		6000
6	212144520134		Hose	1		6500
6	212144520135		Hose	1		7000
7	950400500003		Joint	1		
8	212144520057		Pin	1		
9	212144520044		Mounting Base	1		
10	910400100006		Flat Washer	10		
11	910400500006		Spring Washer	15		
12	910200200058		Screw	13		
13	910401300011		Circlip	1		
14	212144520056		Washer	2		
15	212144520053		Pulley	1		
16	212144520054		Pulley	1		
17	940500100016		Bushing	1		
18	212144520100		Hose	4		4500
18	212144520101		Hose	4		5000
18	212144520102		Hose	4		5500
18	212144520103		Hose	4		6000
18	212144520104		Hose	4		6500
18	212144520105		Hose	4		7000
19	910800100124		O-Ring	26		
20	212144520045		Plate	1		

1= Supply as package. 2= Supply with constraints. 3= Phasing-out supply. 4= Supply as assembly. 5= Check other tables.

06 Three Way Hydraulic Circuit of Mast (216146044506) Continuation 1

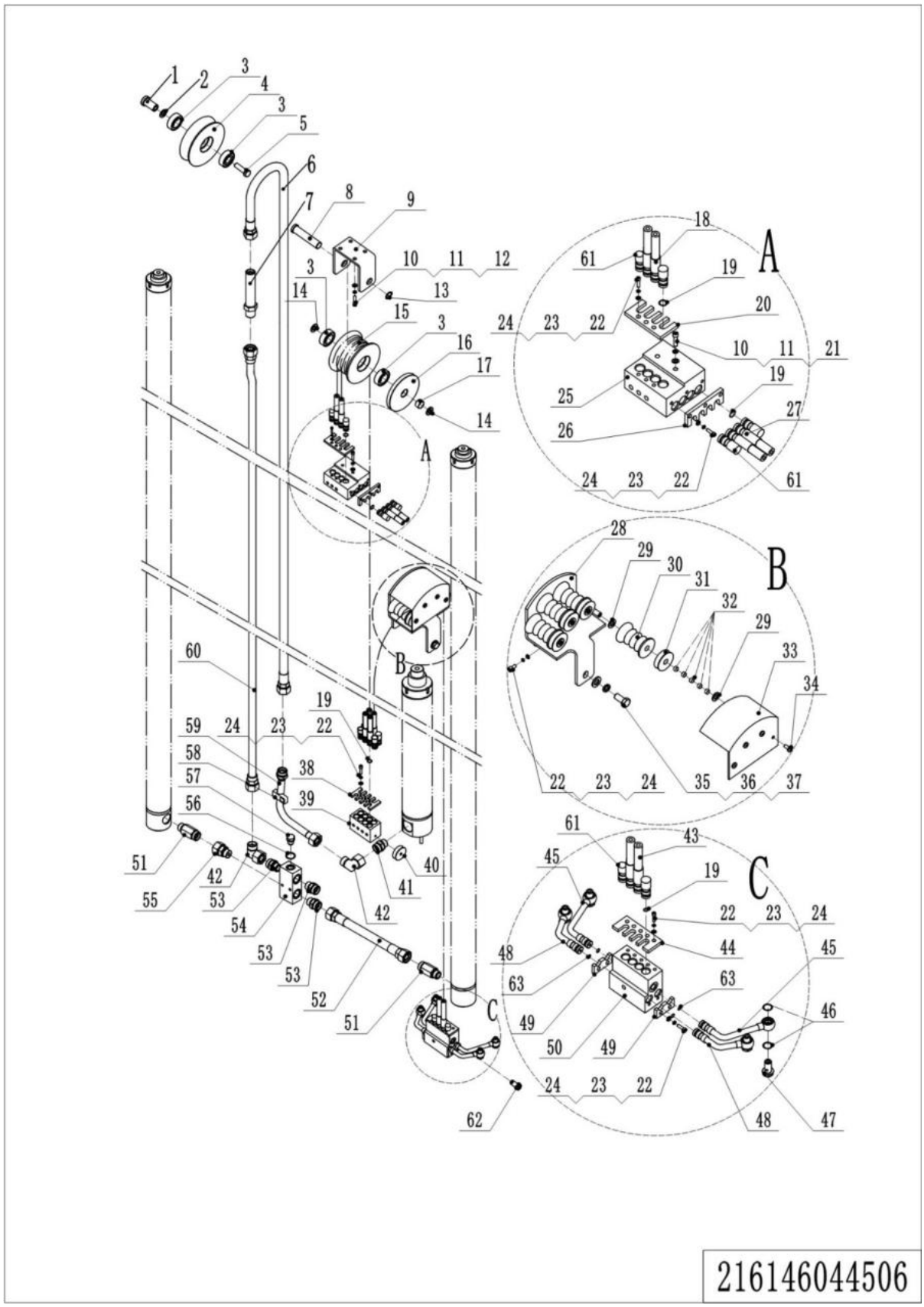

1= Supply as package. 2= Supply with constraints. 3= Phasing-out supply. 4= Supply as assembly. 5= Check other tables.

06 Three Way Hydraulic Circuit of Mast (216146044506) Continuation 1

No.	Item Code	Mark	Item Description	Qty.	Substitute	Note
21	910200200062		Screw	2		
22	910200200035		Screw	16		
23	910400500005		Spring Washer	16		
24	910400100005		Flat Washer	16		
25	212144520047		Valve Block	1		
26	212144520046		Plate	1		
27	216144520015		Hose	2		4500
27	216144520016		Hose	2		5000
27	216144520017		Hose	2		5500
27	216144520018		Hose	2		6000
27	216144520019		Hose	2		6500
27	216144520020		Hose	2		7000
28	212144510047		Wheel Casing	1		
29	910400100007		Flat Washer	8		
30	212144520058		Pulley	4		
31	212144520059		Pulley	4		
32	940500100079		Bushing	20		
33	212144510046		Wheel Casing	1		
34	910200500052		Screw	4		
35	910100300048		Bolt	2		
36	910400500008		Spring Washer	3		
37	910400100008		Flat Washer	2		
38	212144520040		Plate	1		
39	212144520039		Valve Block	1		
40	212144520037		Pulley	1		
41	212198520036		Anti-explosion Valve	1		
42	950400200006		Joint	2		
43	212144520085		Hose	4		4500
43	212144520086		Hose	4		5000
43	212144520087		Hose	4		5500

06 Three Way Hydraulic Circuit of Mast (216146044506) Continuation 2

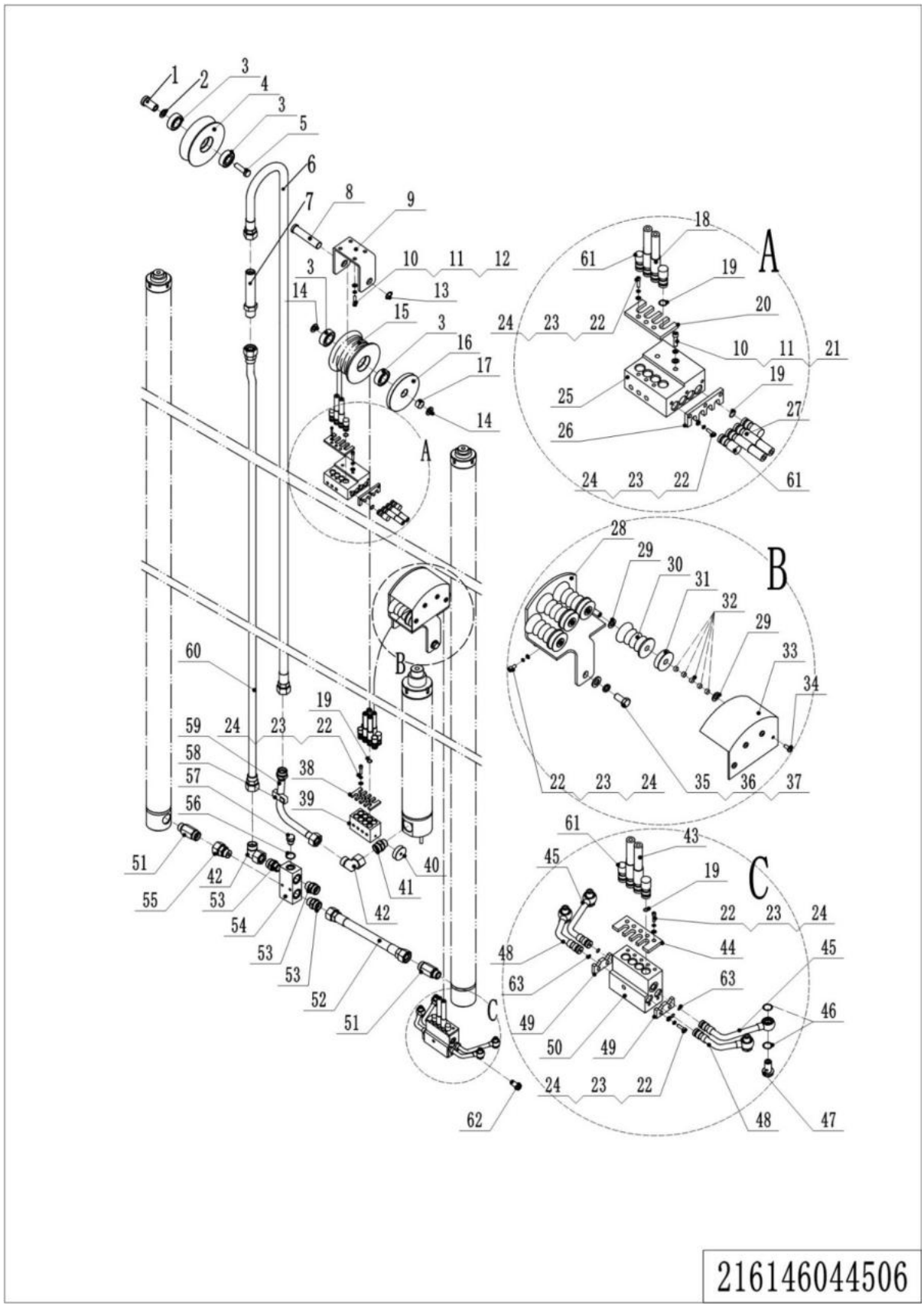

1= Supply as package. 2= Supply with constraints. 3= Phasing-out supply. 4= Supply as assembly. 5= Check other tables.

06 Three Way Hydraulic Circuit of Mast (216146044506) Continuation 2

No.	Item Code	Mark	Item Description	Qty.	Substitute	Note
43	212144520088		Hose	4		6000
43	212144520089		Hose	4		6500
43	212144520090		Hose	4		7000
44	212144520032		Plate	1		
45	212144520033		Steel Tube	2		
46	910800100125		O-Ring	4		
47	212144520042		Bolt	4		
48	212144520034		Steel Tube	2		
49	212144520031		Plate	2		
50	212144520030		Valve Block	1		
51	212198520022		Anti-explosion Valve	2		
52	212144520036		Hose	1		
53	950400400011		Joint	3		
54	212144520041		Valve Block	1		
55	950400100003		Joint	1		
56	910800900005		Bonded Washer	1		
57	911300100001		Screw Plug	1		
58	213044520110		Pipe Clip	1		
59	212144520048		Steel Tube	1		
60	212144520115		Steel Tube	1		4500
60	212144520116		Steel Tube	1		5000
60	212144520117		Steel Tube	1		5500
60	212144520118		Steel Tube	1		6000
60	212144520119		Steel Tube	1		6500
60	212144520120		Steel Tube	1		7000
61	212344520000		Plug	10		
62	951100300002		Plug	2		M12x1.5
63	910800100061		O-Ring	4		

Chapter 5： Steering System And Wheels

01 Steering Wheel (216146031501)

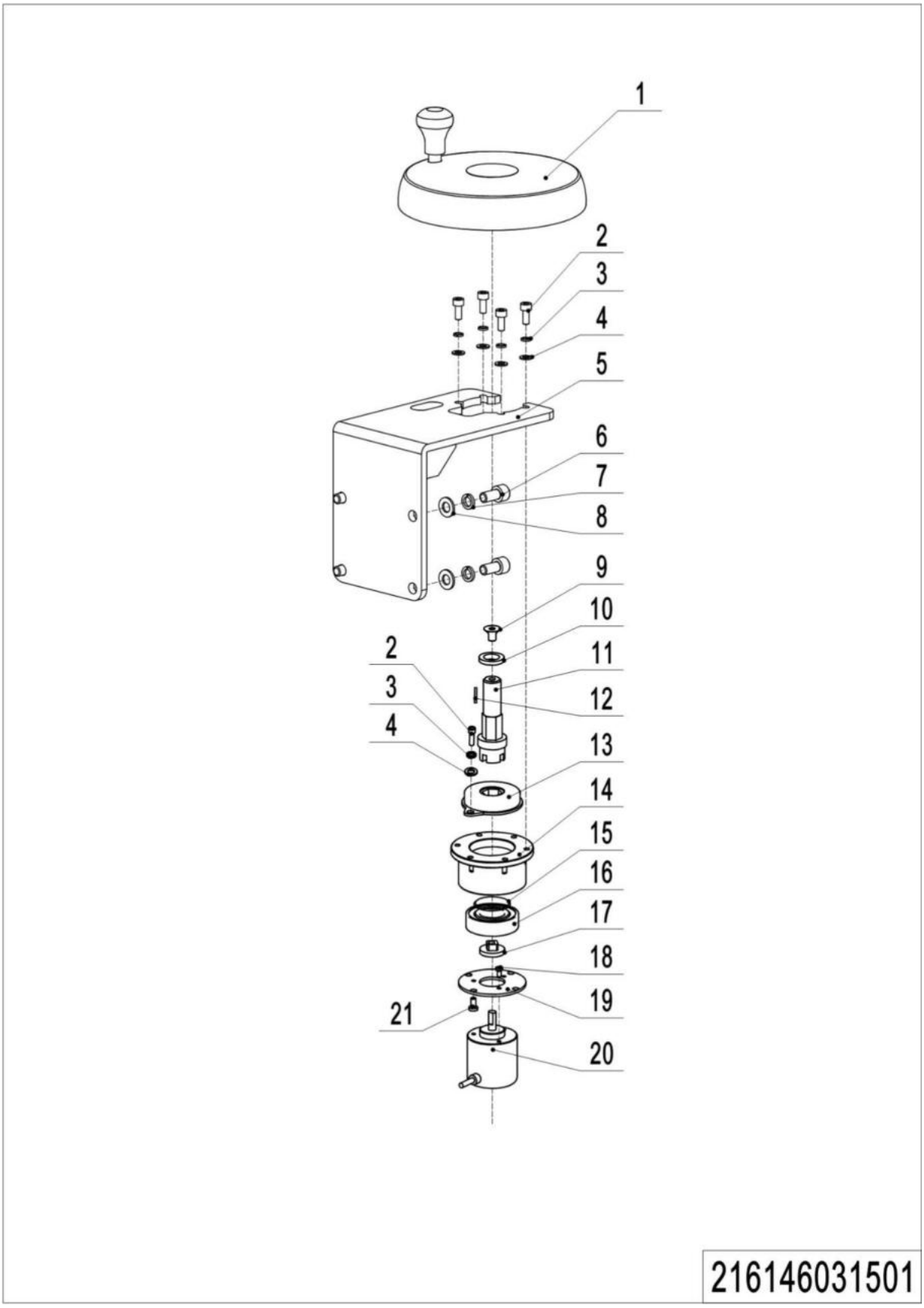

1= Supply as package. 2= Supply with constraints. 3= Phasing-out supply. 4= Supply as assembly. 5= Check other tables.

01 Steering Wheel (216146031501)

No.	Item Code	Mark	Item Description	Qty.	Substitute	Note
1	940801700001		Handwheel	1		
2	910200500038		Screw	6		
3	910400500004		Spring Washer	6		
4	910400100004		Flat Washer	6		
5	216131510000		Bracket	1		
6	910200200055		Screw	4		
7	910400500006		Spring Washer	4		
8	910400100006		Flat Washer	4		
9	910200400015		Screw	1		
10	212131520006		Washer	1		
11	212131520005		Axle	1		
12	910600800004		Flat Key	1		
13	271531511021		Rotary Damper	1		
14	212131520007		Bracket	1		
15	910401400012		Circlip	1		
16	910700200004		Bearing	1		
17	505931520002		Link Block	1		
18	910200500009		Screw	4		
19	212131520008		Fixing Plate	1		
20	921800200031		Encoder	1		
21	910200500021		Screw	4		

02 Load Wheel (216146017001)

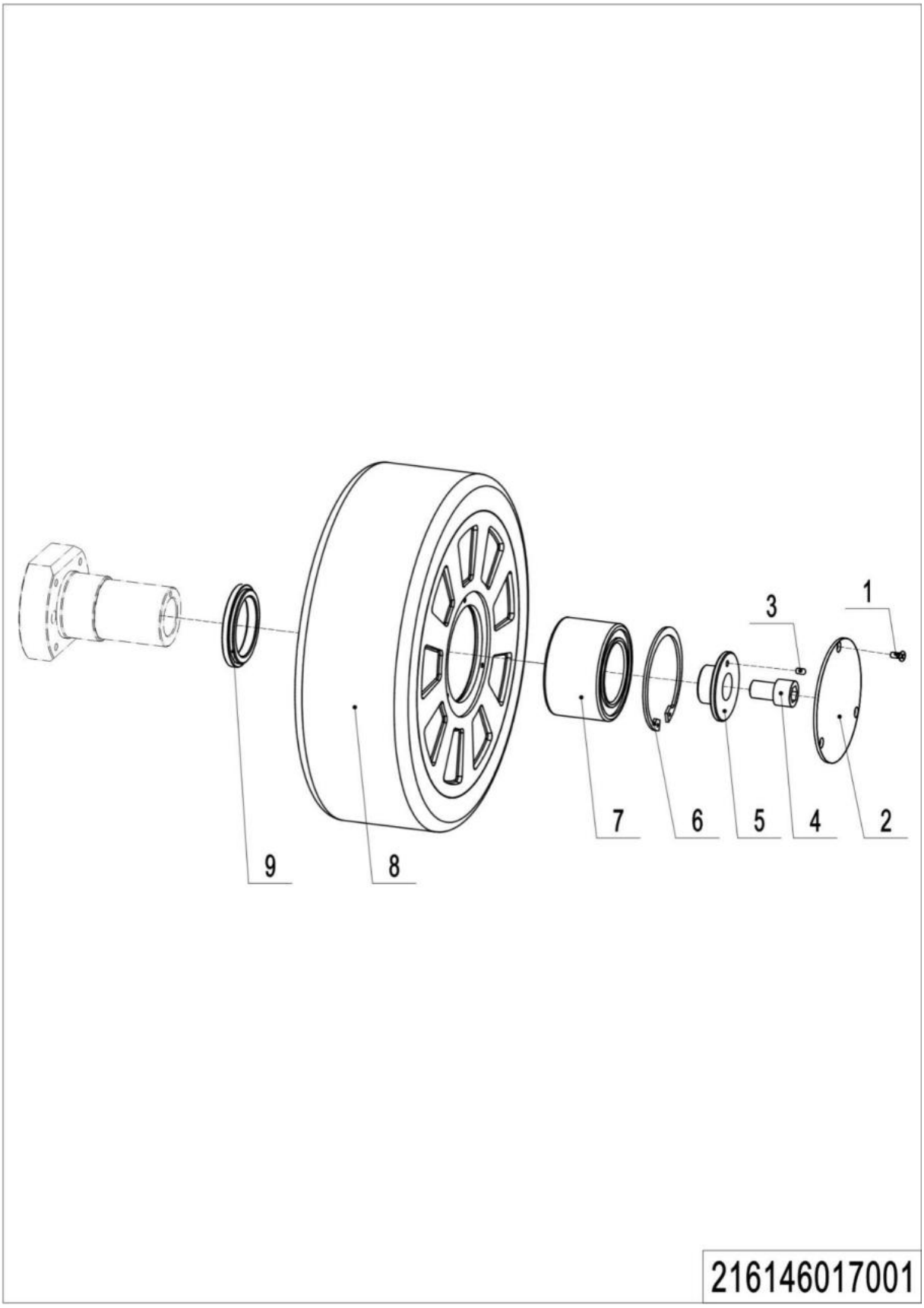

1= Supply as package. 2= Supply with constraints. 3= Phasing-out supply. 4= Supply as assembly. 5= Check other tables.

02 Load Wheel (216146017001)

No.	Item Code	Mark	Item Description	Qty.	Substitute	Note
1	910200600016		Screw	3		
2	212117020000		Close Plate	1		
3	910600100009		Cylindrical Pin	1		
4	910202500001		Screw	1		
5	212117020002		Press Cover	1		
6	910401400024		Circlip	1		
7	941101000005		Bearing	1		
8	940300300034		Wheel Φ285x110	1		
9	212117020001		Washer	1		

Chapter 6： Electrical Parts

01 Controller (Inmotion) (216146033001)

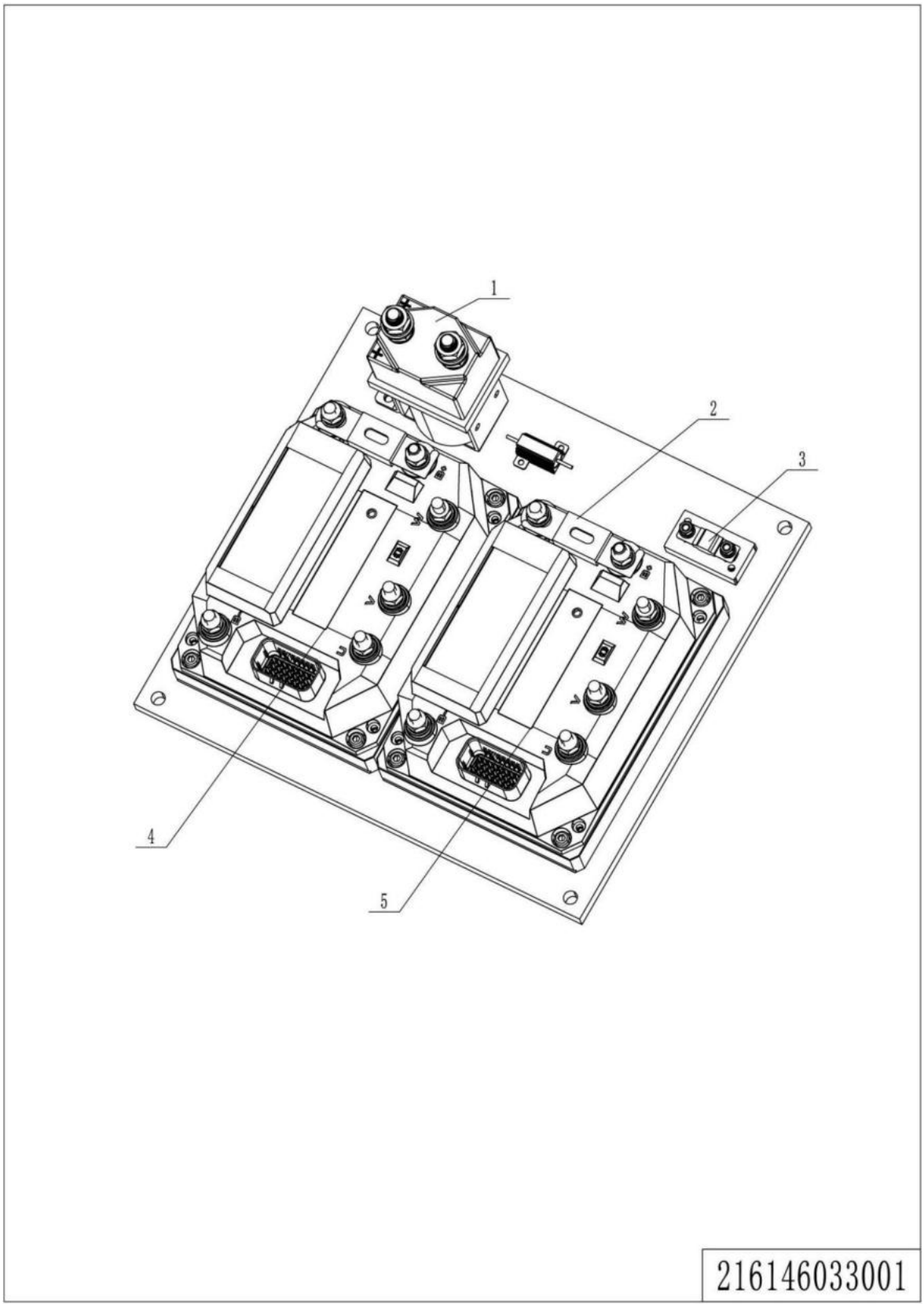

1= Supply as package. 2= Supply with constraints. 3= Phasing-out supply. 4= Supply as assembly. 5= Check other tables.

01 Controller (Inmotion) (216146033001)

No.	Item Code	Mark	Item Description	Qty.	Substitute	Note
1	920700100030		Contactor	1		
2	920100100025		Fuse	2		
3	920100100026		Fuse	1		
4	921400100069		Controller	1		Traction controller
5	921400100069		Controller	1		pump controller

02 Controller (F4A) (216146033002)

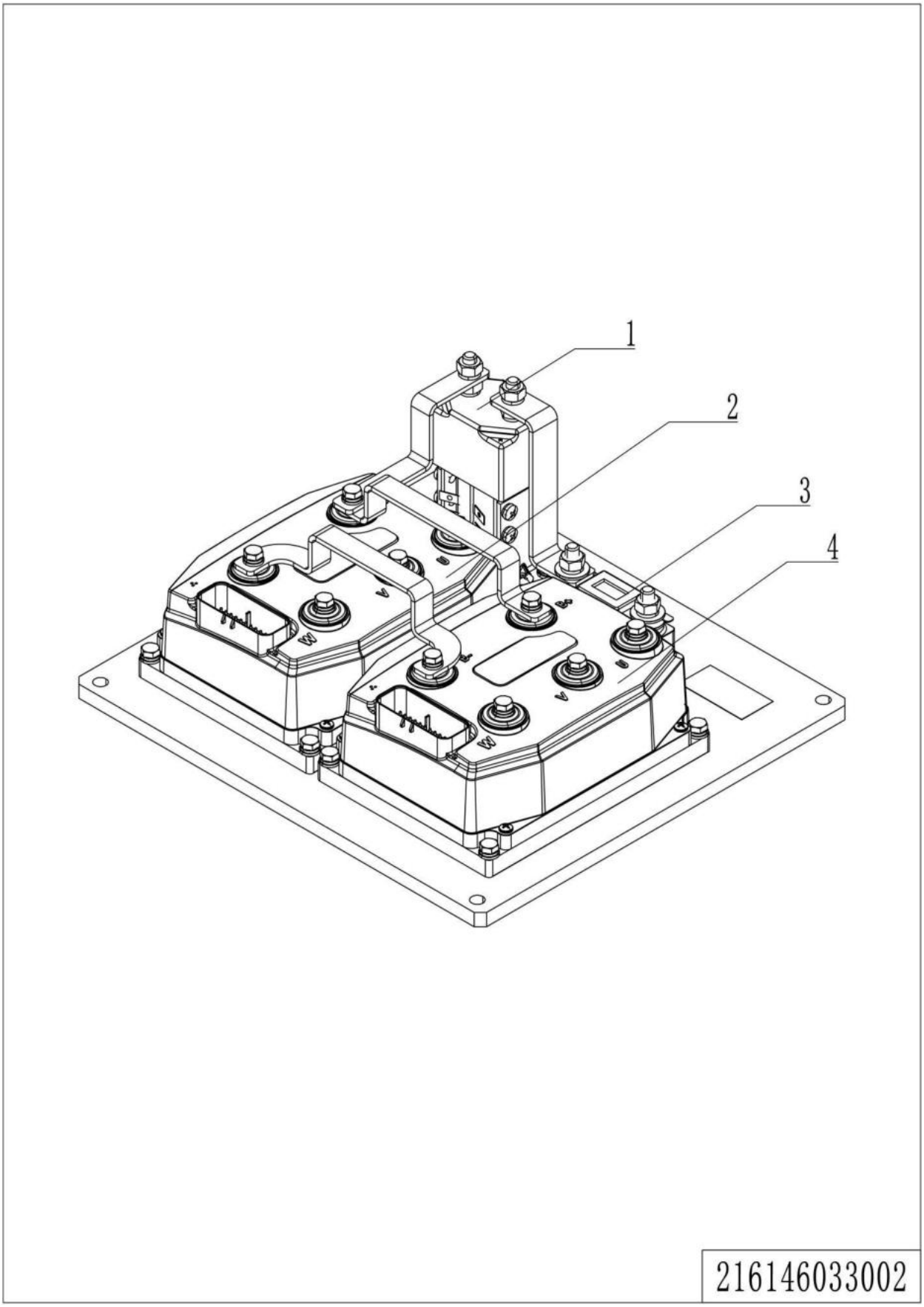

1= Supply as package. 2= Supply with constraints. 3= Phasing-out supply. 4= Supply as assembly. 5= Check other tables.

02 Controller (F4A) (216146033002)

No.	Item Code	Mark	Item Description	Qty.	Substitute	Note
1	920700100008		Contactor	1		
2	921400100156		Controller	1		Traction controller
3	920100100014		Fuse	1		
4	921400100156		Controller	1		pump controller

1= Supply as package. 2= Supply with constraints. 3= Phasing-out supply. 4= Supply as assembly. 5= Check other tables.

03 Wire Harness(Inmotion)(216146033003)

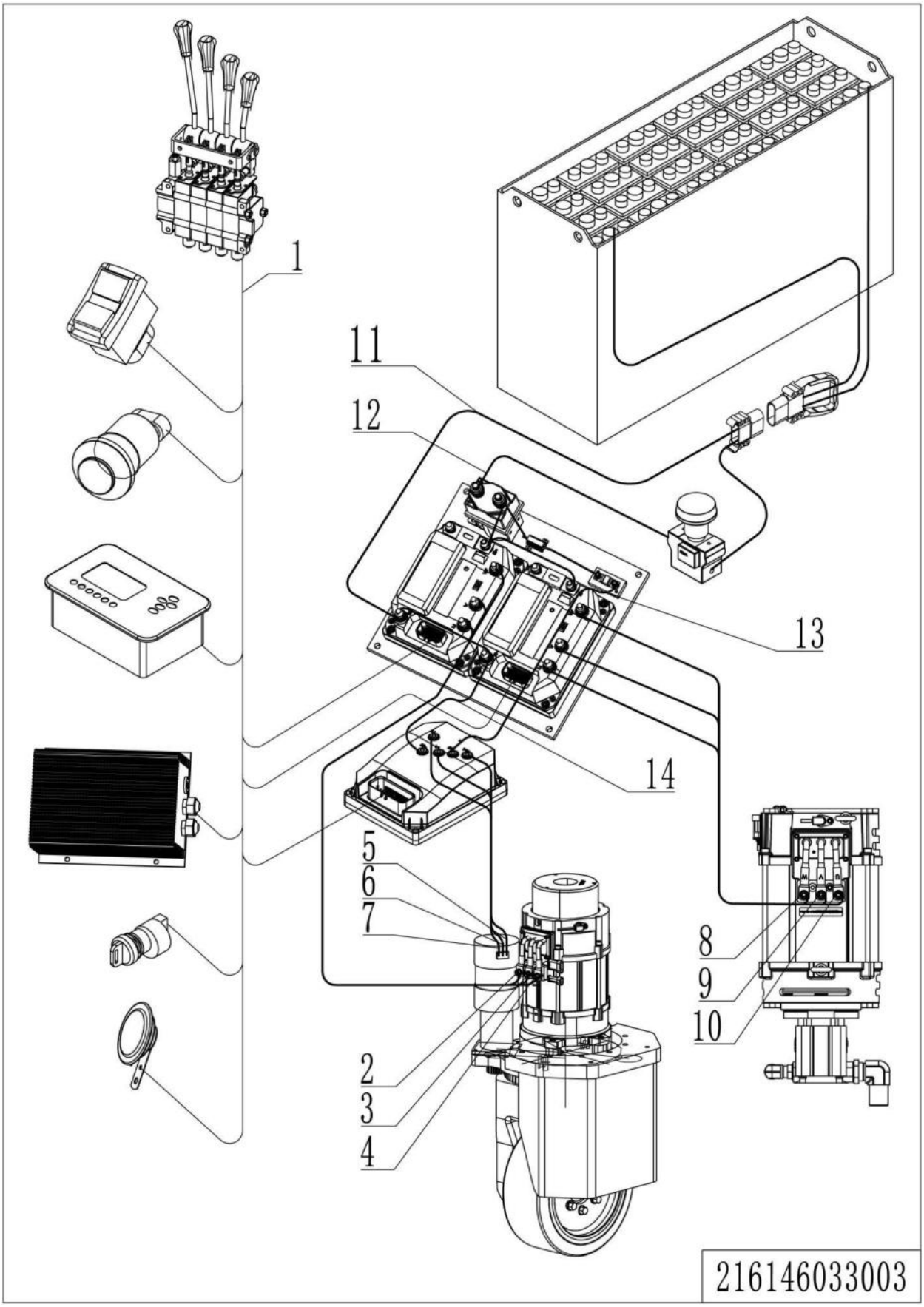

1= Supply as package. 2= Supply with constraints. 3= Phasing-out supply. 4= Supply as assembly. 5= Check other tables.

03 Wire Harness(Inmotion) (216146033003)

No.	Item Code	Mark	Item Description	Qty.	Substitute	Note
1	216133010000		Wire Harness	1		
2	216133010001		Cable	1		
3	216133010002		Cable	1		
4	216133010003		Cable	1		
5	216133010009		Cable	1		
6	216133010008		Cable	1		
7	216133010007		Cable	1		
8	216133010006		Cable	1		
9	216133010005		Cable	1		
10	216133010004		Cable	1		
11	216133010016		Cable	1		Lead-acid batteries
11	216133010011		Cable	1		lithium battery
12	216133010010		Cable	1		
13	216133010012		Cable	1		
14	216133010013		Cable	1		

04 Wire Harness(F4A) (216146033004)

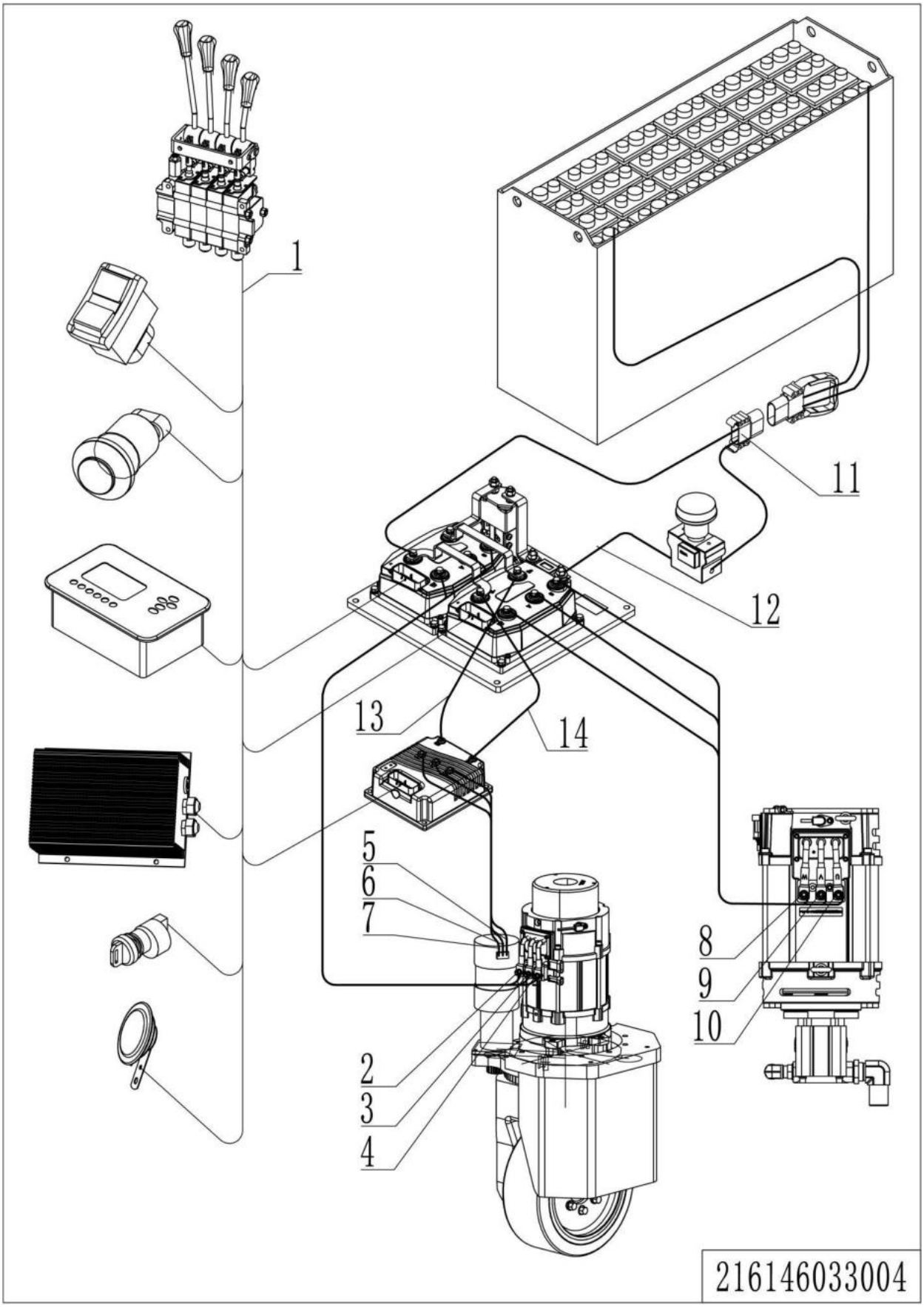

1= Supply as package. 2= Supply with constraints. 3= Phasing-out supply. 4= Supply as assembly. 5= Check other tables.

04 Wire Harness(F4A) (216146033004)

No.	Item Code	Mark	Item Description	Qty.	Substitute	Note
1	216133010020		Cable	1		
2	216133010024		Cable	1		
3	216133010025		Cable	1		
4	216133010026		Cable	1		
5	216133010032		Cable	1		
6	216133010031		Cable	1		
7	216133010030		Cable	1		
8	216133010029		Cable	1		
9	216133010028		Cable	1		
10	216133010027		Cable	1		
11	216133010033		Cable	1		Lead-acid batteries
11	216133010034		Cable	1		lithium battery
12	216133010021		Cable	1		
13	216133010023		Cable	1		
14	216133010022		Cable	1		

05 Charger (216146036501)

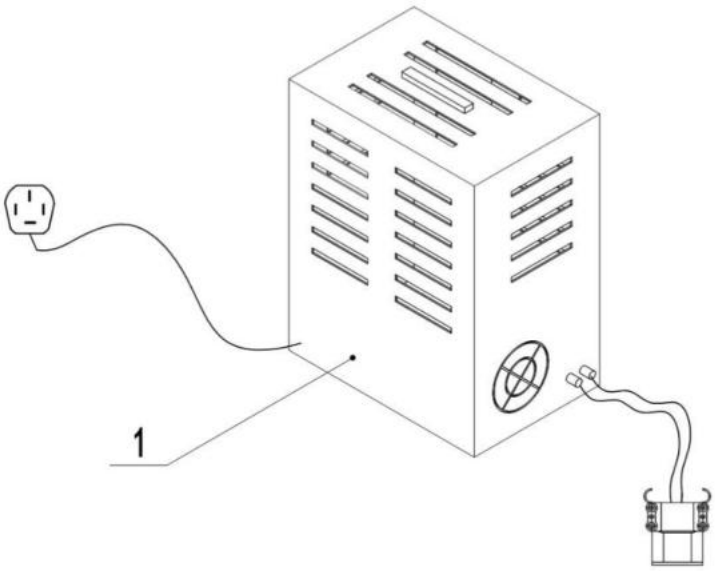

216146036501

1= Supply as package. 2= Supply with constraints. 3= Phasing-out supply. 4= Supply as assembly. 5= Check other tables.

03 Charger (216146036501)

No.	Item Code	Mark	Item Description	Qty.	Substitute	Note
1	921000200728		Charger48V35A(Asia-CHN)	1		
1	921000200729		Charger48V35A(Asia-EN)	1		
1	921000200730		Charger48V35A(EU)	1		
1	921000200731		Charger48V35A(US)	1		
1	921000200732		Charger48V35A(AUS)	1		
1	921000200733		Charger48V35A(ISR)	1		
1	921000200734		Charger48V35A(ARG)	1		
1	921000200735		Charger48V35A(ZA)	1		

Chapter 7： Special Parts

01 Battery Holder (216146012501)

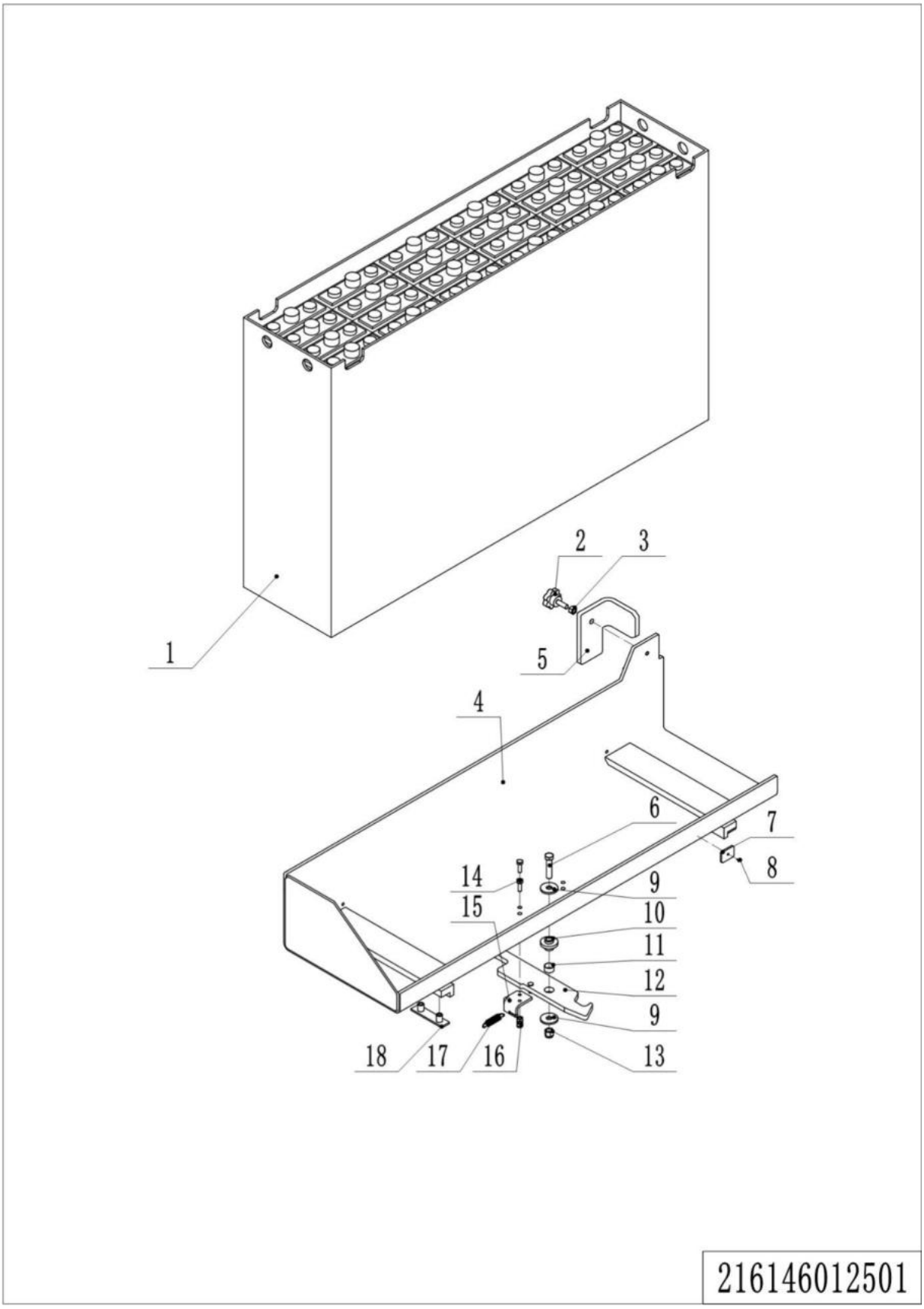

1= Supply as package. 2= Supply with constraints. 3= Phasing-out supply. 4= Supply as assembly. 5= Check other tables.

01 Battery Holder (216146012501)

No.	Item Code	Mark	Item Description	Qty.	Substitute	Note
1	216137010000		Battery48V280Ah(welded)	1		
1	216137010001		Battery48V280Ah(bolted)	1		
2	911000300002		Handle	1		
3	910300100007		Nut	1		
4	216112510000		Battery Rack	1		
5	213012520303		Stop Block	1		
6	910100300055		Bolt	1		
7	532621520062		Crash Pad	2		
8	910200200055		Screw	2		
9	213012520009		Washer	2		
10	213012520008		Bracket	1		
11	940500100012		Bushing	1		
12	213012510021		Pothook	1		
13	910300500006		Nut	1		
14	910100300023		Bolt	2		
15	213012520005		Plate	1		
16	910300500004		Nut	2		
17	213012520006		Spring	1		
18	255044020131		Subplate	4		

02 Monitor (212146036001)

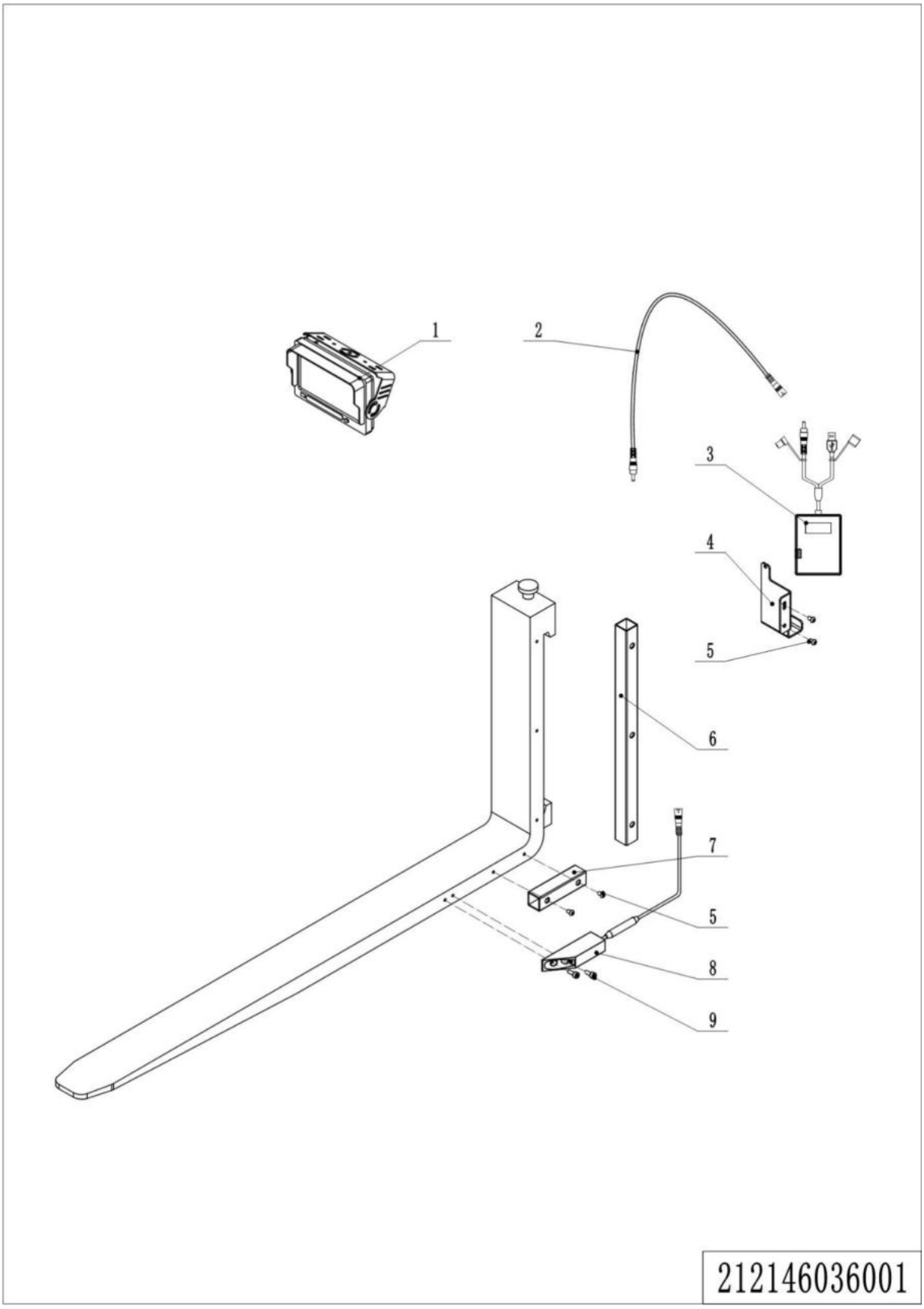

1= Supply as package. 2= Supply with constraints. 3= Phasing-out supply. 4= Supply as assembly. 5= Check other tables.

02 Monitor (212146036001)

No.	Item Code	Mark	Item Description	Qty.	Substitute	Note
1	921100100058		Display	1		
2	921500100110		Wire	1		
3	920600100384		Li Battery 3.7V30000mAh	1		
4	212136020003		Mounting Bracket	1		
5	910200300017		Screw	7		
6	212136020002		Conduit	1		
7	212136020001		Conduit	1		
8	921100100059		Camera	1		
9	910200200033		Screw	2		

Chapter 8: Others

01 Control Panel (216146010001)

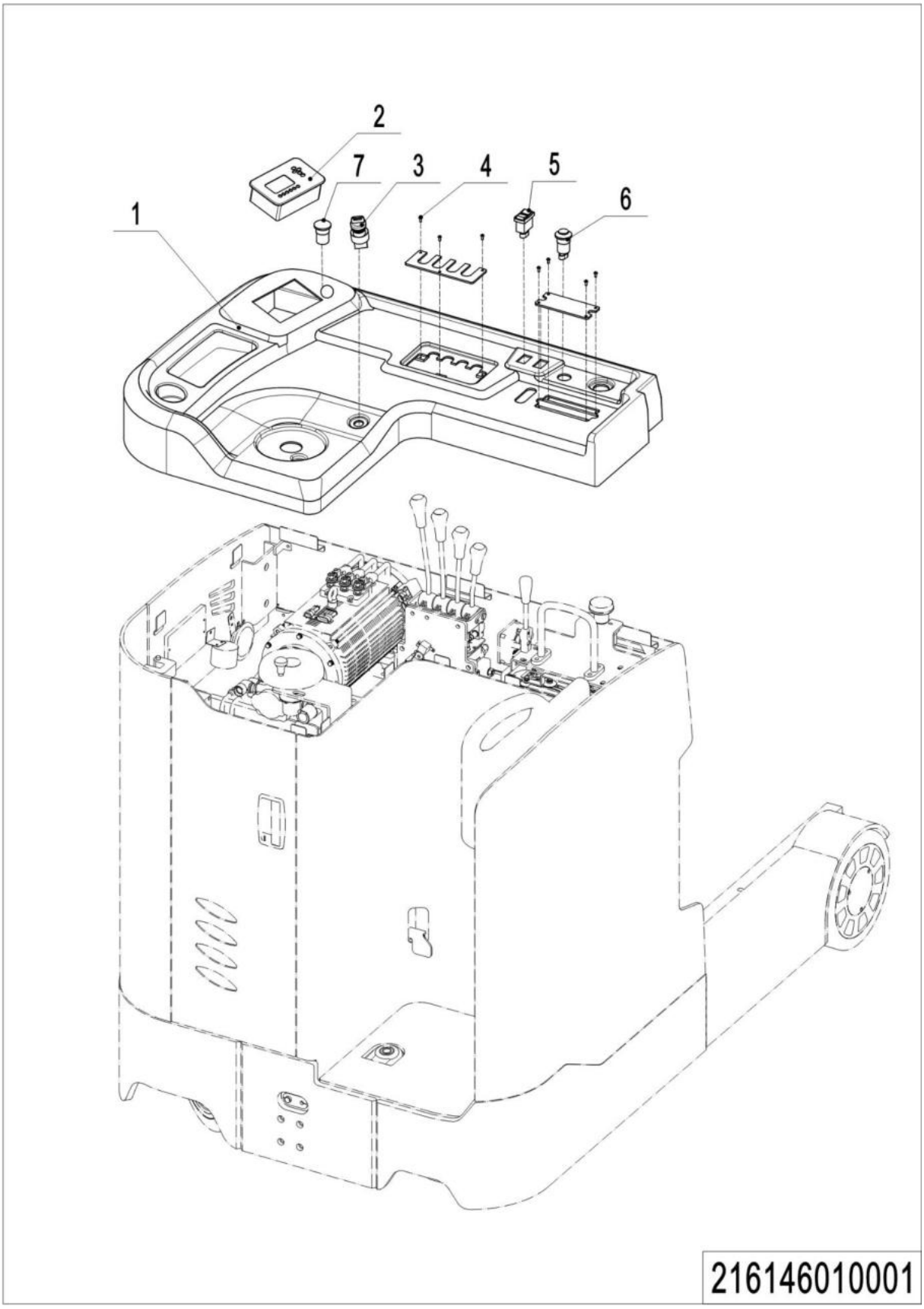

1= Supply as package. 2= Supply with constraints. 3= Phasing-out supply. 4= Supply as assembly. 5= Check other tables.

01 Control Panel (216146010001)

No.	Item Code	Mark	Item Description	Qty.	Substitute	Note
1	216110020000		Protective Cover	1		
2	921100100063		Display	1		
2	921100100107		Display	1		
3	920200200002		Key Switch	1		
4	910200500023		Screw	7		
5	920200800021		Rocker Switch	1		
6	920200700054		Button	1		
7	921900100022		USB	1		

02 Labels and Decal (216146047001)

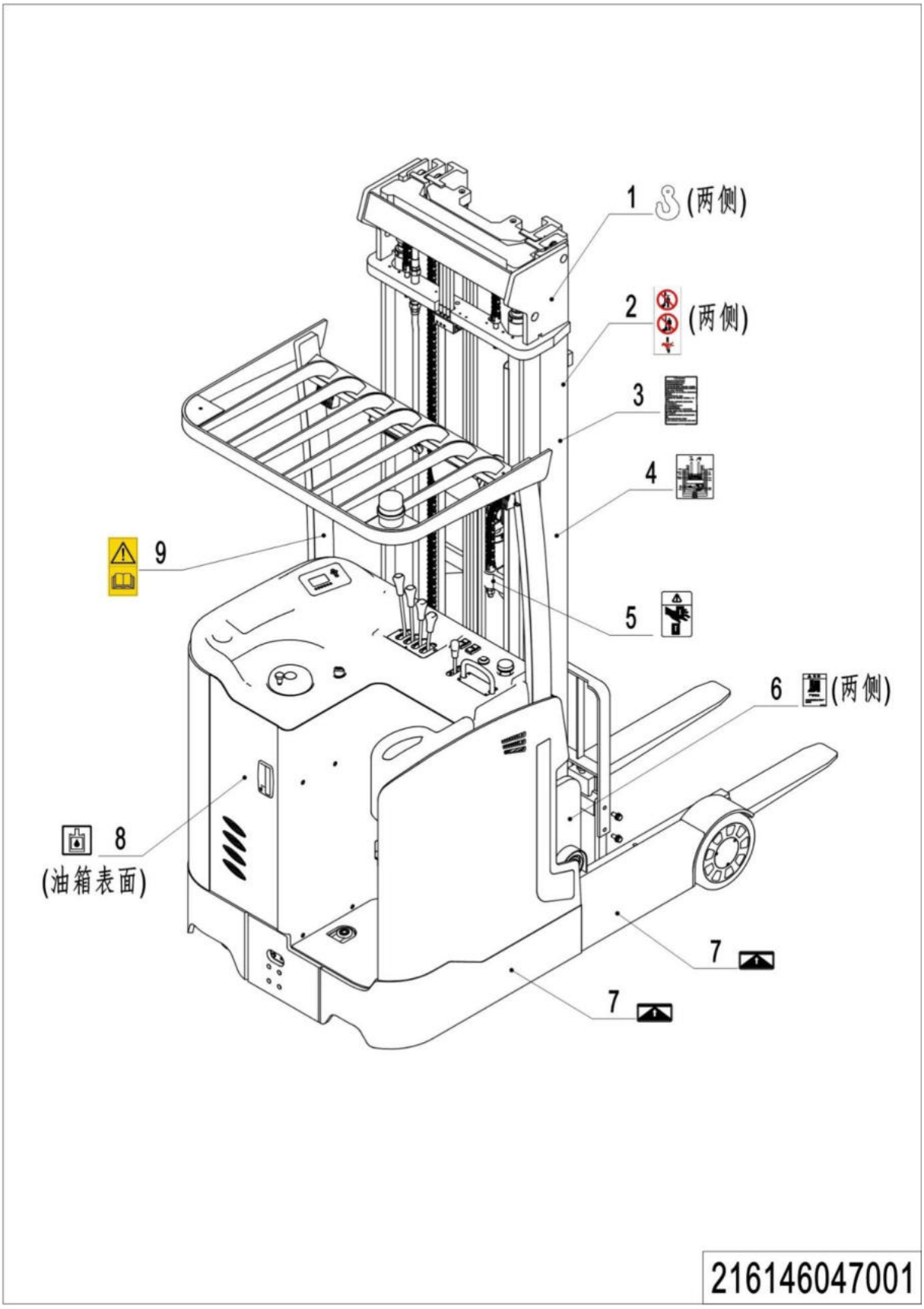

1= Supply as package. 2= Supply with constraints. 3= Phasing-out supply. 4= Supply as assembly. 5= Check other tables.

02 Labels and Decal (216146047001)

No.	Item Code	Mark	Item Description	Qty.	Substitute	Note
1	941200300001		Label	2		
2	941200100004		Label	2		
3	212147020012		Label	1		
4	212147020010		Label,Lubrication	1		
5	941200100027		Label	1		
6	602047020035		Lable	2		
7	255047020023		Label	2		
8	255047020004		Label	1		
9	941200300011		Label	1		

Appendix

01 Electrical Circuit Diagram(Inmotion) (216146003001)

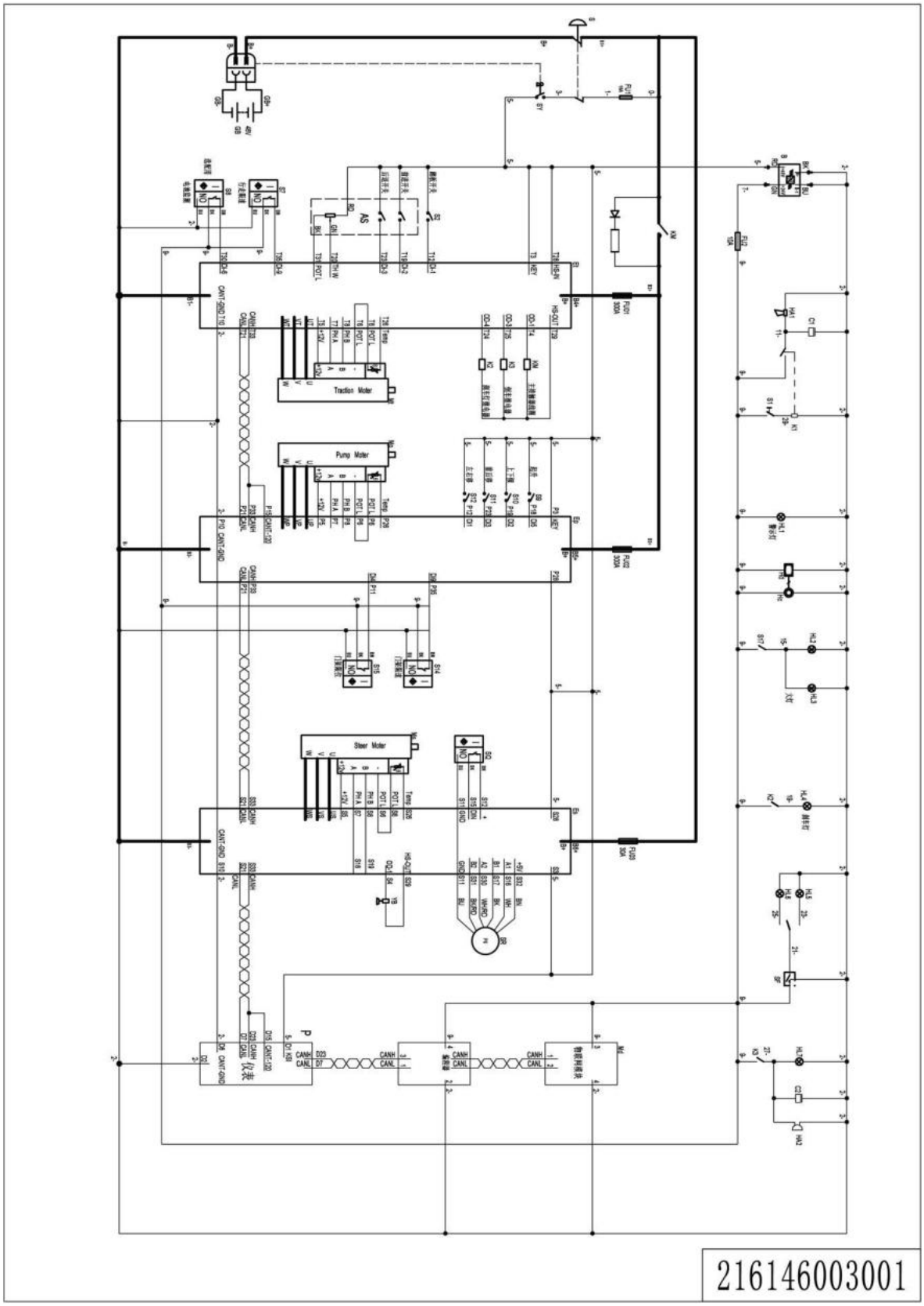

1= Supply as package. 2= Supply with constraints. 3= Phasing-out supply. 4= Supply as assembly. 5= Check other tables.

02 Electrical Circuit Diagram(F4A) (216146003002)

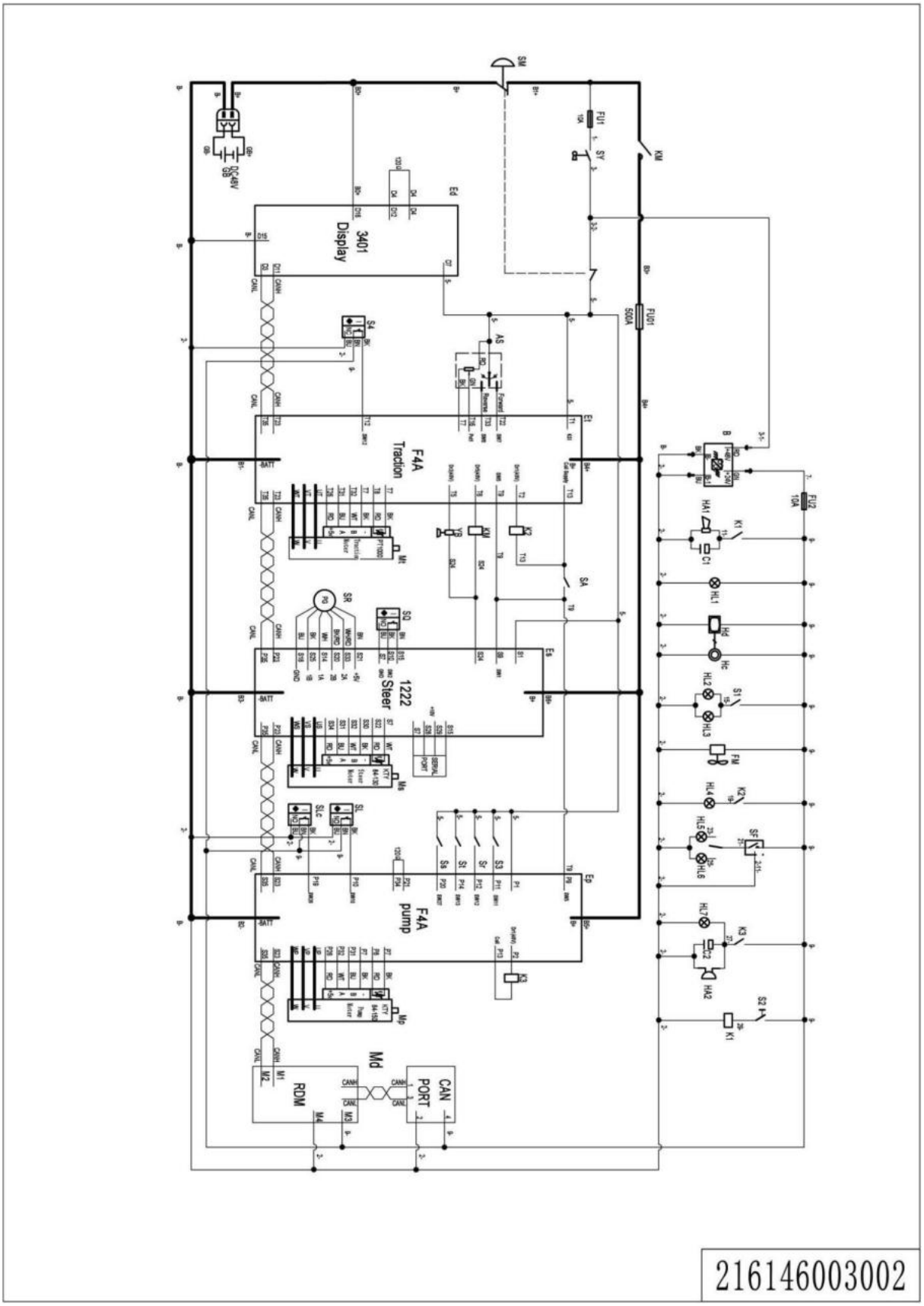

03 Electrical Circuit Diagram(F4A+Li) (216246003003)

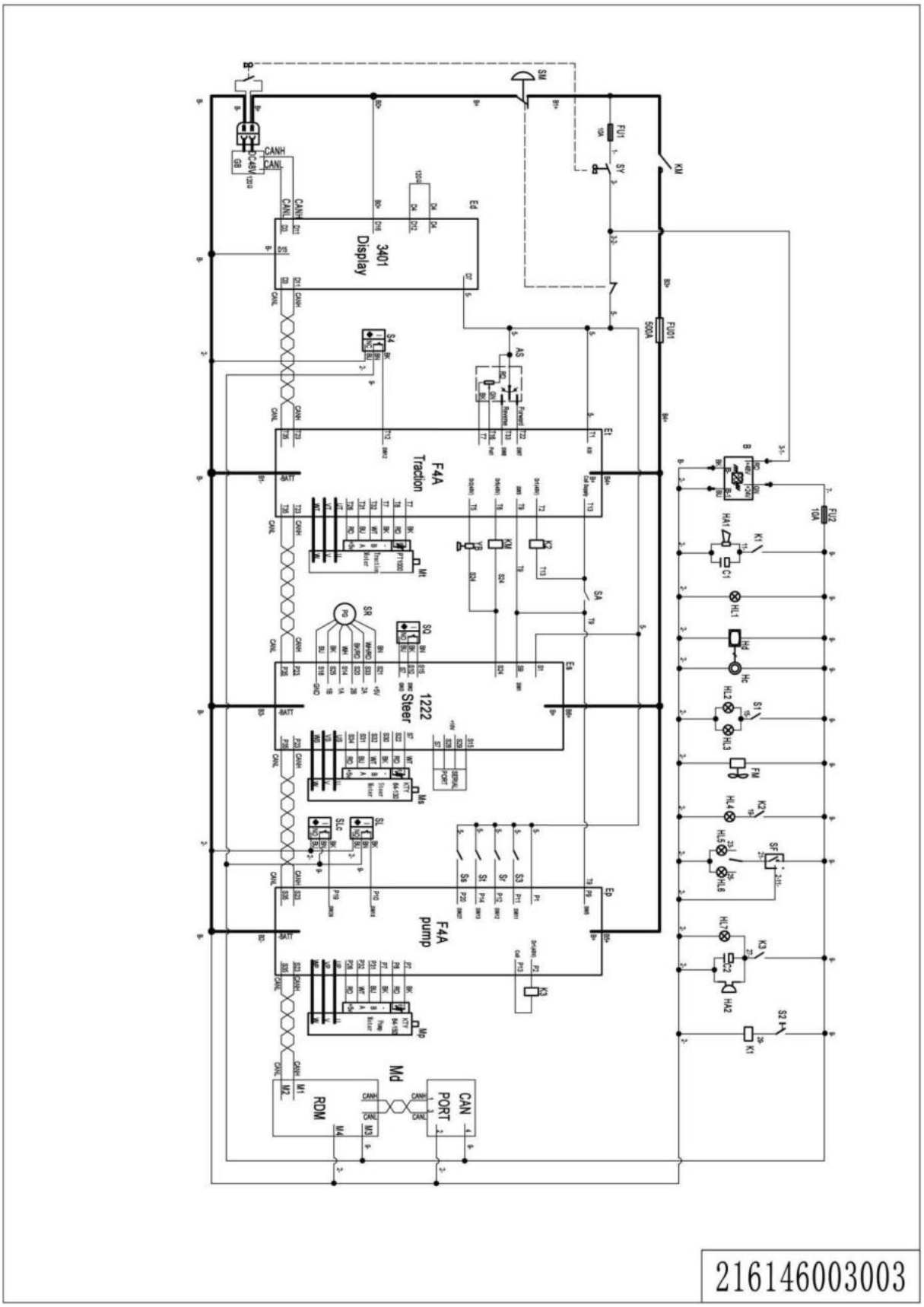

04 Hydraulic Circuit Diagram (216146045501)

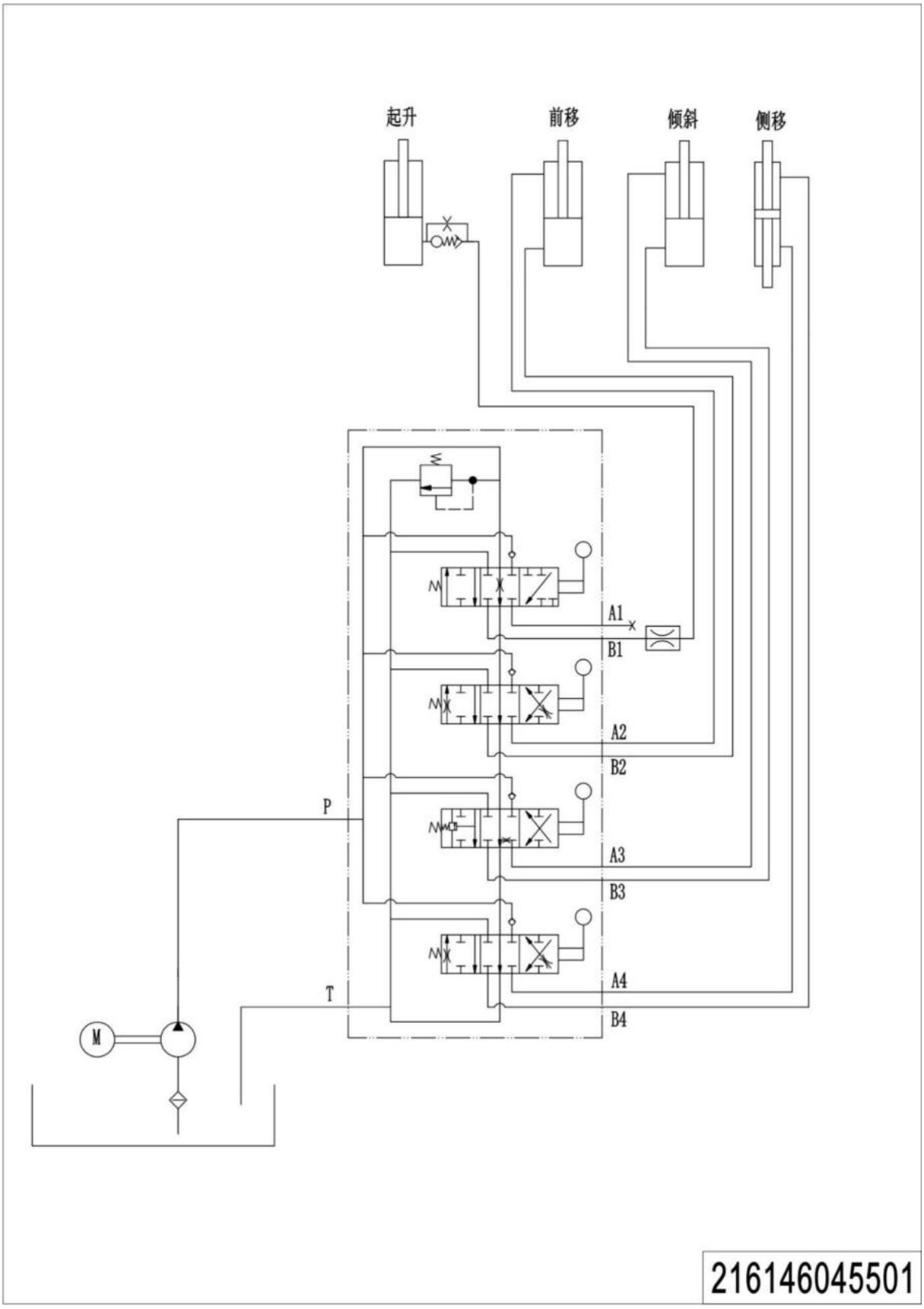

1= Supply as package. 2= Supply with constraints. 3= Phasing-out supply. 4= Supply as assembly. 5= Check other tables.

05 Consumable Parts List

No.	Item Code	Item Description	Qty.	Chapter/ Section/ Number
1	910700600024	Bearing	1	Chapter 1/01/20
2	910700600039	Bearing	1	Chapter 1/01/26
3	940300400007	Wheel Φ343x140	1	Chapter 1/01/31
4	910700200020	Bearing	2	Chapter 1/01/35
5	940300300022	Wheel Φ180x76	2	Chapter 1/01/36
6	910700200021	Bearing	2	Chapter 1/01/37
7	940500400007	Bearing	1	Chapter 1/01/39
8	910700200024	Bearing	2	Chapter 1/01/42
9	910700700015	Bearing	1	Chapter 1/01/44
10	940500400004	Bearing	2	Chapter 1/01/50
11	920100200002	Fuse	2	Chapter 2/01/60 Chapter 2/03/56
12	940500100007	Bushing	4	Chapter 2/02/26
13	212198510004	Seal Kit	1	Chapter 2/05/8.01
14	212198510000	Seal Kit	1	Chapter 2/07/2.01
15	212198510002	Seal Kit	1	Chapter 4/01/19.01
16	940200300034	Compound Roller	2	Chapter 4/01/22
17	940200300042	Compound Roller	4	Chapter 4/01/33
18	940200100042	Main Roller	2	Chapter 4/01/34
19	940200300034	Compound Roller	2	Chapter 4/02/3
20	940200300052	Compound Roller	2	Chapter 4/02/18
21	212198510003	Seal Kit	1	Chapter 4/03/15.01
22	940200300046	Compound Roller	2	Chapter 4/03/16
23	940200300046	Compound Roller	6	Chapter 4/04/10
24	940500400013	Bearing	4	Chapter 4/04/12
25	910700200019	Bearing	4	Chapter 4/05/3 Chapter 4/06/3
26	940500100016	Bushing	1	Chapter 4/05/17 Chapter 4/06/17
27	910800100124	O-Ring	26	Chapter 4/05/19 Chapter 4/06/19
28	940500100079	Bushing	20	Chapter 4/05/32 Chapter 4/06/32
29	910800100125	O-Ring	4	Chapter 4/05/46 Chapter 4/06/46
30	910800100061	O-Ring	4	Chapter 4/05/63 Chapter 4/06/63
31	910700200004	Bearing	1	Chapter 5/01/16

1= Supply as package. 2= Supply with constraints. 3= Phasing-out supply. 4= Supply as assembly. 5= Check other tables.

32	940300300034	Wheel Φ285x110	1	Chapter 5/02/8
33	920100100025	Fuse	2	Chapter 6/01/2
34	920100100026	Fuse	1	Chapter 6/01/3
35	920100100014	Fuse	1	Chapter 6/02/3
36	940500100012	Bushing	1	Chapter 7/01/11

1= Supply as package. 2= Supply with constraints. 3= Phasing-out supply. 4= Supply as assembly. 5= Check other tables.