NOBLELIFT

Electric Reach Truck RT15Q

PARTS MANUAL

211546010101

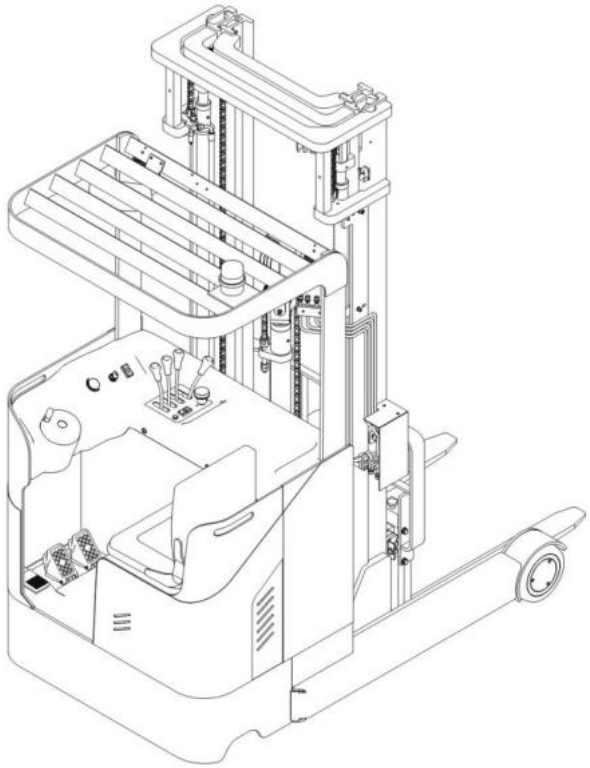

Version: V01

Truck Identification Number From:

Parts Manual

RT15Q-PM01EN

Please order parts from authorized dealers of Noblelift Intelligent Equipment Co., LTD.

In order to avoid wrong delivery, all the orders for spare parts should specify the following items:

- Truck model, identification number and manufacture year.
- Orders for spare parts of mast, hydraulic transmission unit, steering axle, motor, etc. shall indicate the manufacture number of these parts.
- Codes for Noblelift spare parts are shown in the table of parts manual. Please pay attention to the description of supply status, order quantity, etc. (check the number listed in "Mark" column of the parts manual).

"Mark" Column:

The unmarked indicates the parts are in short supply cycle.

Number 1: supply as package. Indicating these that parts are small parts and seal parts, which are supplied in package unit and in short supply cycle.

Number 2: supply with constraints. Indicating that these spare parts are not in stock and will be prepared for production after receiving the order from customers, which are in long supply cycle.

Number 3: phasing-out supply. Indicating that these parts will be replaced by new parts due to technical improvements and the current stock will not be available when these parts run out. Please check the description of technical improvements notice.

Number 4: supply as assembly. Indicating that these parts are assembly parts defined by manufacture process, which cannot be supplied as a single part.

Number 5: check other tables.

This parts manual is the property of Noblelift and can be shared under the confidential agreement only, Noblelift has the right to claim for compensation of any unauthorized use. Copy without permission is not allowed. Figures in the manual are not limited by the original design. Noblelift Intelligent Equipment Co., LTD reserves the right to improve the products for continuous technology progress.

Table of Contents

Chapter 1: Drive System....1
01 Drive unit (211546013501)....1
Chapter 2: Hydraulic System....3
01 Hydraulic Circuit 3 (211546025001)....3
02 Multi-way Valve 3 (211546025002)....5
03 Hydraulic Circuit 4 (211546025501)....7
04 Multi-way Valve 4 (211546025502)....9
05 Two Stage Mast Hydraulic Circuit 3 (211546044001)....11
06 Two Stage Mast Hydraulic Circuit 4 (211546044002)....13
07 Three Stage Mast Hydraulic Circuit 3 (211546044504)....15
07 Three Stage Mast Hydraulic Circuit 3 (211546044504) Continuation....17
08 Three Stage Mast Hydraulic Circuit 4 (211546044505)....19
08 Three Stage Mast Hydraulic Circuit 4 (211546044505) Continuation....21
09 Oil Tank (211546019001)....23
10 Pump Unit (4.0Kw, 4.2cc) (211546023501)....25
Chapter 3: Truck Structure....27
01 Truck Frame (211546021501)....27
02 Overhead Guard (211546022001)....29
03 Pedal (211546018001)....31
04 Seat (211546037501)....33
Chapter 4: Mast....35
01 Outer Mast (Two/Three Stage Mast) (211546044501)....35
02 Middle Mast (Three Stage Mast) (211546044502)....37
03 Inner Mast (Three Stage Mast) (211546044503)....39
04 Inner Mast (Two Stage Mast) (211546044001)....41
05 Fork Carriage (Two Stage Mast) (201546038002)....43
06 Fork Carriage (Three Stage Mast) (201546038003)....45
Chapter 5: Steering system, braking system and wheels....47
01 Load Wheel (202046017001)....47
02 Side Wheel (211546016501)....49
03 Steering Wheel (211546013501)....51
Chapter 6: Electrical Parts....53
01 Wire harness (211546033001)....53
02 Controller (211546033002)....55
03 Charger (211546036501)....57
04 Traction Battery (201546037001)....59
Chapter 7: Special Parts....61
01 Load Backrest (216546040501)....61
Chapter 8: Others....63
01 Labels and Decals (211546047001)....63
02 Control Panel (211546010001)....65

Appendix.....67
01 Electrical Circuit Diagram.....67
02 Hydraulic Circuit Diagram.....68
03 Easy Worn Parts List.....69

Chapter 1: Drive System

01 Drive unit (211546013501)

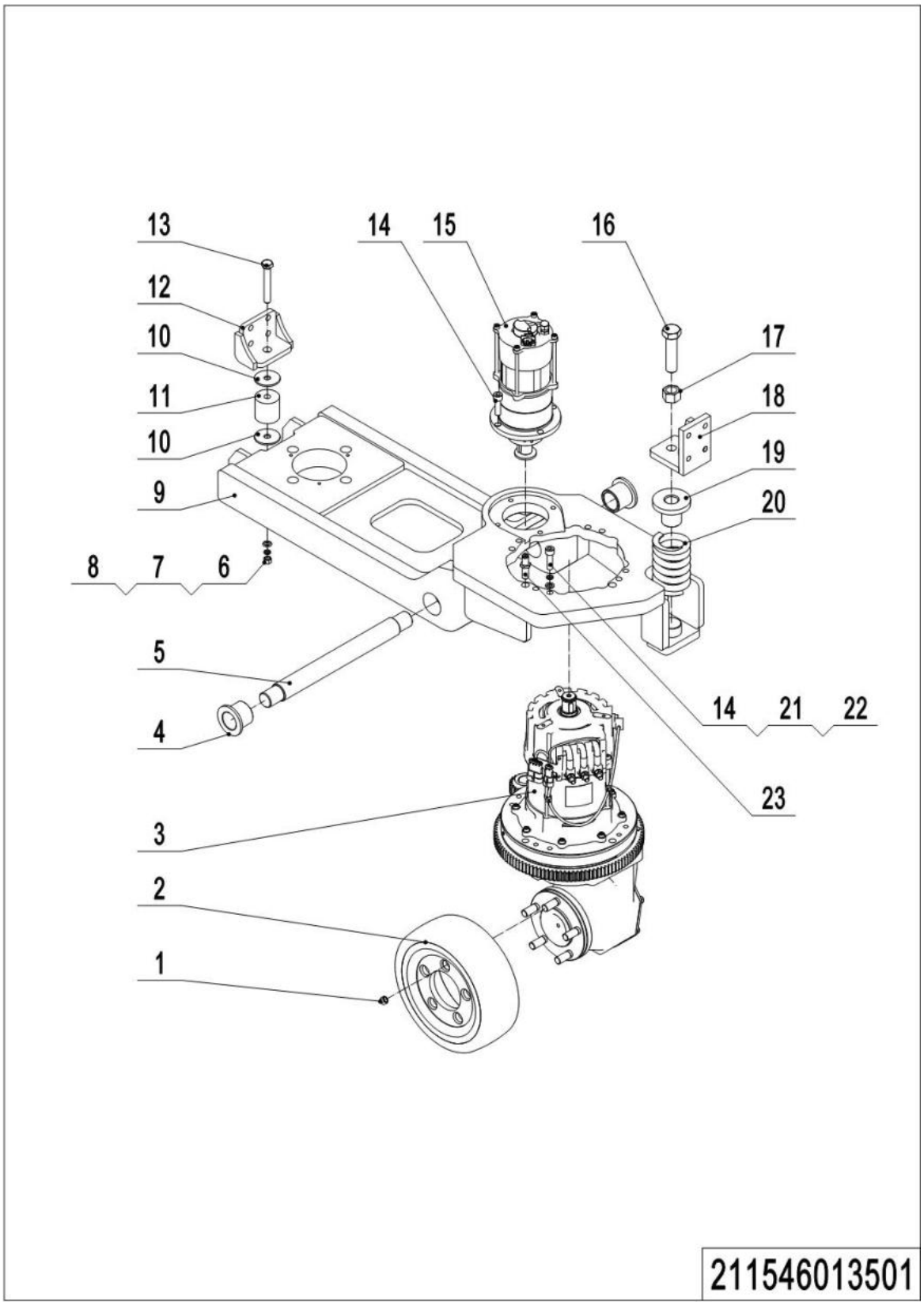

01 Drive unit (211546013501)

No.	Item Code	Mark	Item Description	Qty.	Substitute	Note
1	275015520005		Nut	5		
2	940300400002		Tyre Φ250x82	1		
3	940900600004		Steering Unit	1		
4	940500400002		Self-lubricating Bearing	2		
5	211513520015		Axle	1		
6	910300100008		Nut M12	1		
7	910400500008		Spring Washer 12	1		
8	910400100008		Flat Washer 12	1		
9	211513510000		Drive wheel frame	1		
10	211513520014		Gasket	2		
11	211513520013		Polyurethane Sleeve	1		
12	211513510001		Pressure Plate	1		
13	910100100054		Bolt M12x80	1		
14	910200200078		Screw M10x35	12		
15	920900100050		Motor	1		
16	910100100090		Bolt M20x80	1		
17	910300100012		Nut M20	1		
18	211513510002		Pressure Plate	1		
19	211513520011		Guide Post	1		
20	211513520012		Spring	1		
21	910400500007		Spring Washer 10	8		
22	910400100007		Flat Washer 10	8		
23	920200400008		Proximity switch	1		

Chapter 2: Hydraulic System

01 Hydraulic Circuit 3 (211546025001)

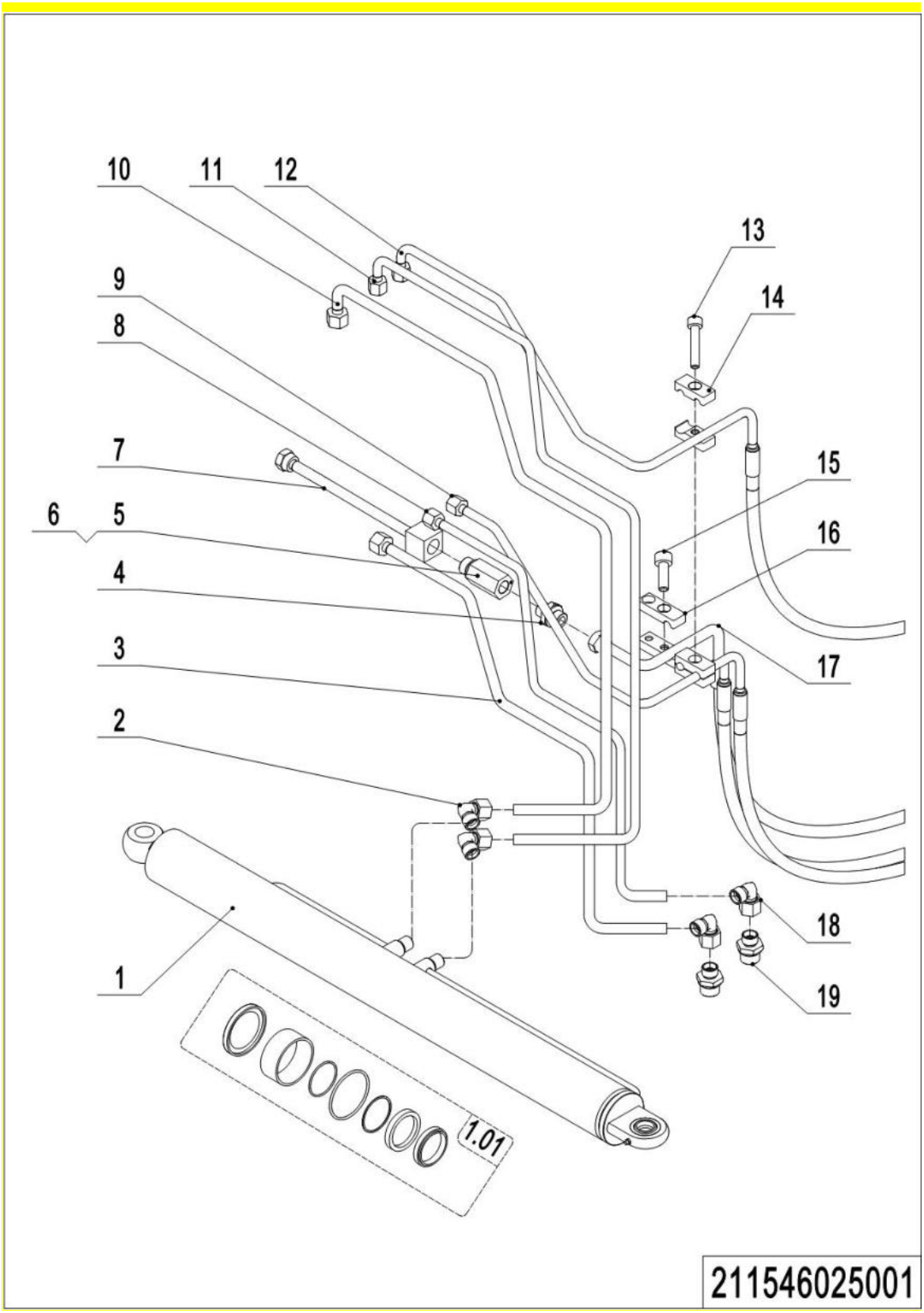

01 Hydraulic Circuit 3 (211546025001)

No.	Item Code	Mark	Item Description	Qty.	Substitute	Note
1	211520010000		Cylinder	1		
1.01	201598510001		Sealing Accessories	1		
2	950400200003		Elbow	2		
3	211525020002		Hydraulic Pipe Assembly	1		
4	950400300009		Joint	1		
5	201025020010		Multi-way Valve	1		
6	950600400003		Throttle Valve	1		
7	211525020010		Hydraulic Pipe Assembly	1		
8	211525020005		Hydraulic Pipe Assembly	1		
9	211525020007		Hydraulic Pipe Assembly	1		
10	211525020001		Hydraulic Pipe Assembly	1		
11	211525020004		Hydraulic Pipe Assembly	1		
12	211525020006		Hydraulic Pipe Assembly	1		
13	910200200062		Screw M8x45	1		
14	201044520027		Pipe Clamp	4		
15	910200200058		Screw M8x25	2		
16	201044520023		Pipe Clamp	2		
17	211525020003		Hydraulic Pipe Assembly	1		
18	950400200004		Elbow	2		
19	950400300008		Joint	2		

02 Multi-way Valve 3 (211546025002)

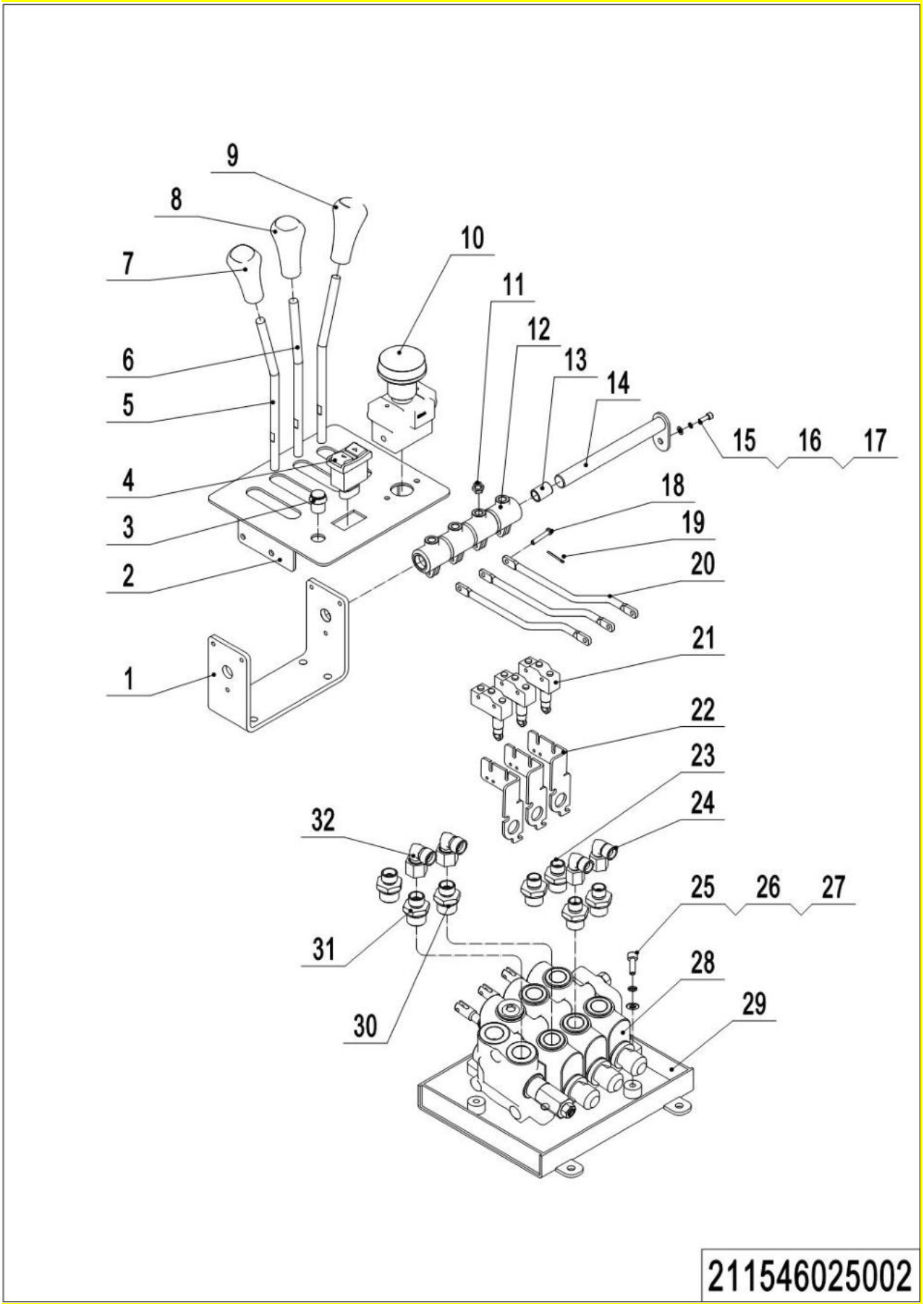

02 Multi-way Valve 3 (211546025002)

No.	Item Code	Mark	Item Description	Qty.	Substitute	Note
1	212325510000		Fixing Plate	1		
2	211525510000		Cover	1		
3	920200700044		Button	1		
4	920200800040		Rocker Switch	1		
5	212225520028		Joystick	2		
6	212225520029		Joystick	1		
7	253524520010		Joystick Handle	1		
8	216525020011		Joystick Handle	1		
9	253524520009		Joystick Handle	1		
10	920200100001		Emergency Switch	1		
11	910300100007		Nut M10	3		
12	213025020020		Joystick Seat	4		
13	940500100007		Bushing	4		
14	201025510001		Trunnion	1		
15	910100300010		Bolt M6x16	1		
16	910400500005		Spring Washer 6	1		
17	910400100005		Flat Washer 6	1		
18	941100800001		Pin	6		
19	910600600011		Cotter Pin	6		
20	212325520005		Connecting Rod	3		
21	920200300004		Micro Switch	3		
22	212225520021		Fixing Plate	3		
23	950400400012		Joint	4		
24	950400200003		Elbow	2		
25	910200200058		Screw M8x25	3		
26	910400500006		Spring Washer 8	3		
27	910400100006		Flat Washer 8	3		
28	950700100005		Multi-way Valve	1		
29	211525010000		Mounting Bracket	1		
30	XG180337873		Joint	1		
31	950400400005		Joint	2		
32	950400200004		Elbow	2		

03 Hydraulic Circuit 4 (211546025501)

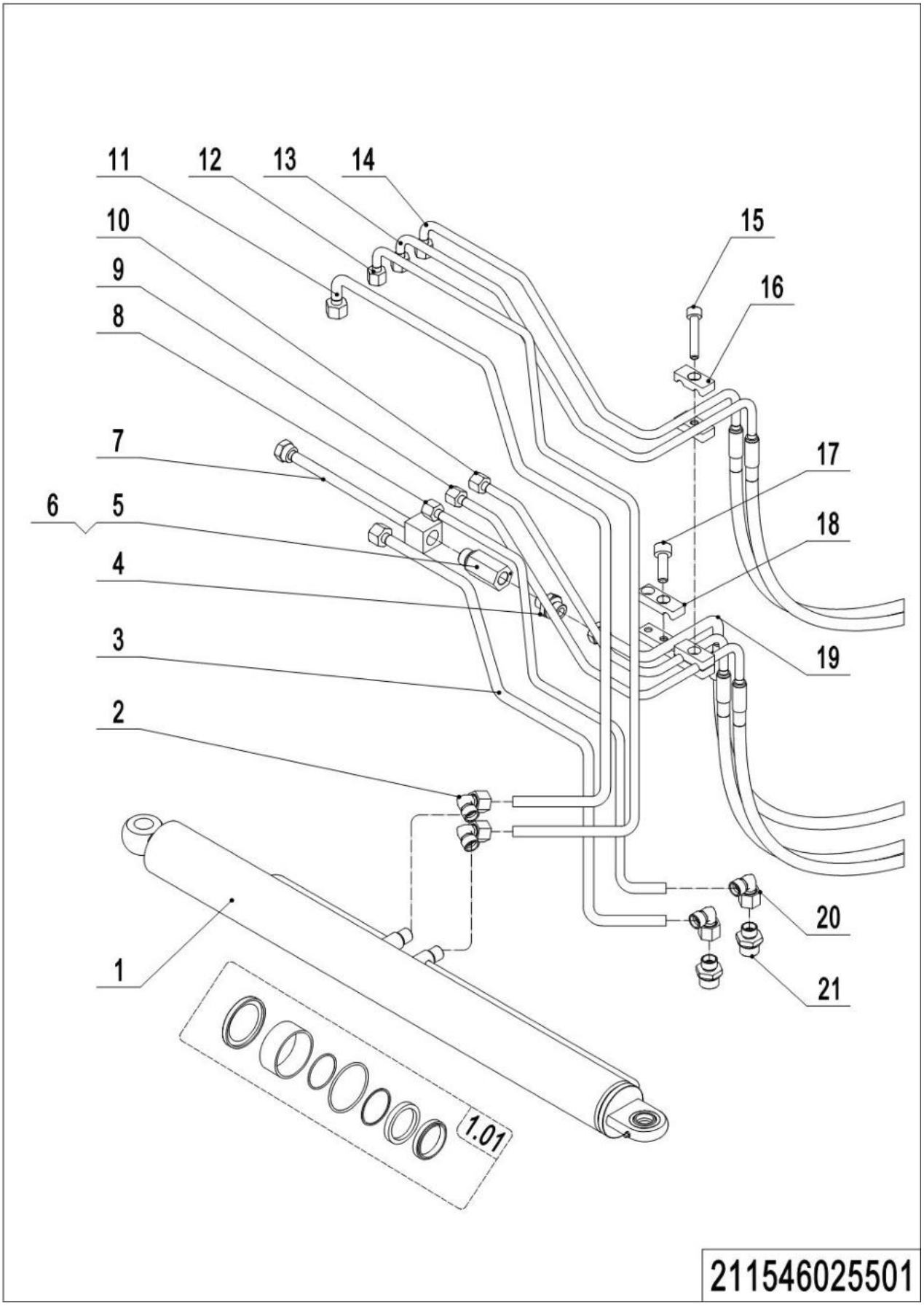

03 Hydraulic Circuit 4 (211546025501)

No.	Item Code	Mark	Item Description	Qty.	Substitute	Note
1	211520010000		Cylinder	1		
1.01	201598510001		Sealing Accessories	1		
2	950400200003		Elbow	2		
3	211525020002		Hydraulic Pipe Assembly	1		
4	950400300009		Joint	1		
5	201025020010		Multi-way Valve	1		
6	950600400003		Throttle Valve	1		
7	211525020010		Hydraulic Pipe Assembly	1		
8	211525020005		Hydraulic Pipe Assembly	1		
9	211525020007		Hydraulic Pipe Assembly	1		
10	211525520002		Hydraulic Pipe Assembly	1		
11	211525020001		Hydraulic Pipe Assembly	1		
12	211525020004		Hydraulic Pipe Assembly	1		
13	211525020006		Hydraulic Pipe Assembly	1		
14	211525520001		Hydraulic Pipe Assembly	1		
15	910200200062		Screw M8x45	1		
16	201044520027		Pipe Clamp	4		
17	910200200058		Screw M8x25	2		
18	201044520023		Pipe Clamp	2		
19	211525020003		Hydraulic Pipe Assembly	1		
20	950400200004		Elbow	2		
21	950400300008		Joint	2		

04 Multi-way Valve 4 (211546025502)

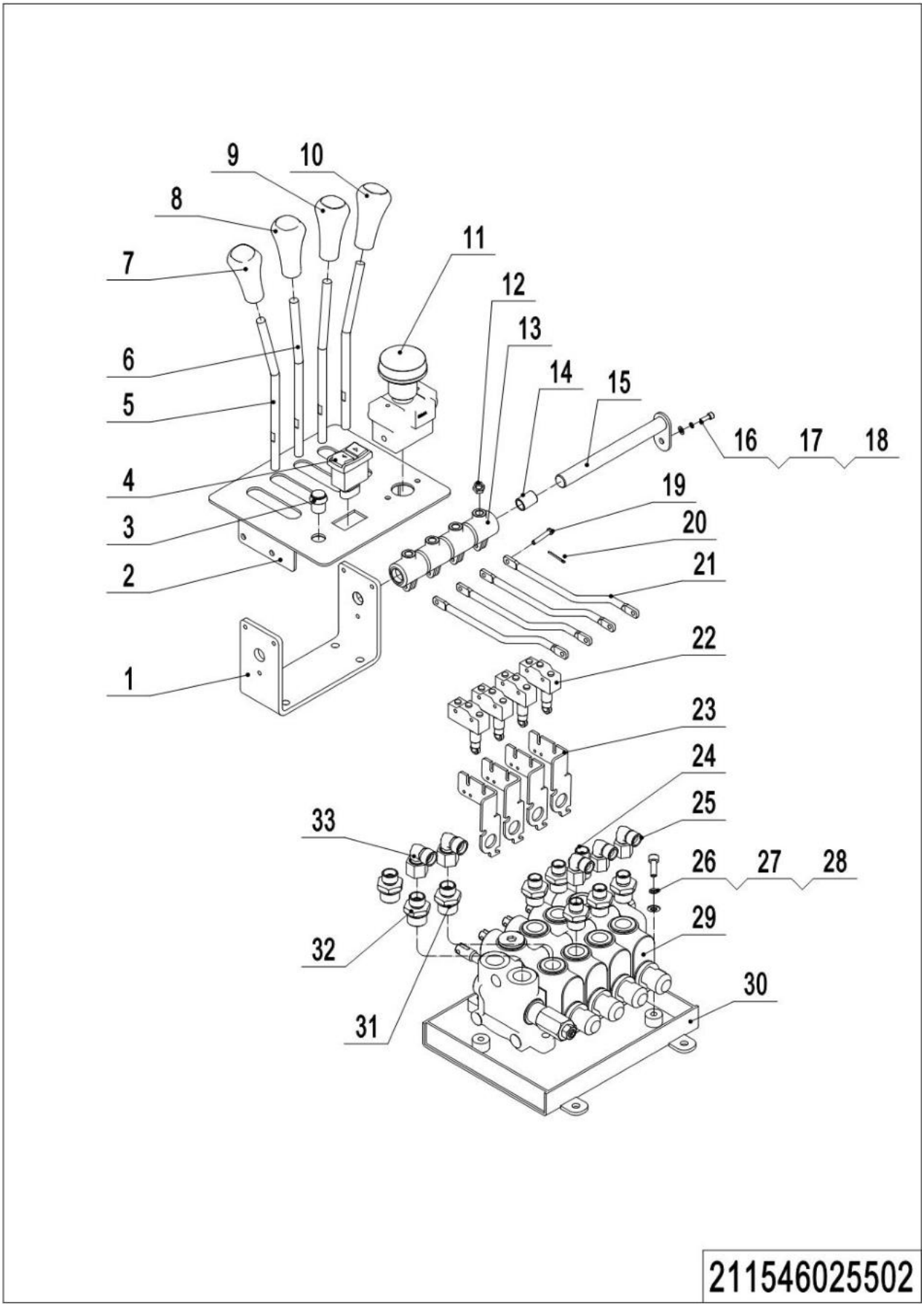

04 Multi-way Valve 4 (211546025502)

No.	Item Code	Mark	Item Description	Qty.	Substitute	Note
1	212225510000		Fixing Seat	1		
2	211525510000		Cover	1		
3	920200700044		Button	1		
4	920200800040		Rocker Switch	1		
5	212225520028		Joystick	2		
6	212225520029		Joystick	2		
7	253524520010		Joystick Handle	1		
8	216525020011		Joystick Handle	1		
9	253524520009		Joystick Handle	1		
10	253525020002		Joystick Handle	1		
11	920200100001		Emergency Switch	1		
12	910300100007		Nut M10	4		
13	213025020020		Joystick Seat	4		
14	940500100007		Bushing	4		
15	201025510001		Trunnion	1		
16	910100300010		Bolt M6x16	1		
17	910400500005		Spring Washer 6	1		
18	910400100005		Flat Washer 6	1		
19	941100800001		Pin	8		
20	910600600011		Cotter Pin	8		
21	212325520005		Connecting Rod	4		
22	920200300004		Micro Switch	4		
23	212225520021		Fixing Plate	4		
24	950400400012		Joint	6		
25	950400200003		Elbow	3		
26	910200200058		Screw M8x25	3		
27	910400500006		Spring Washer 8	3		
28	910400100006		Flat Washer 8	3		
29	950700100005		Multi-way Valve	1		
30	212225510000		Fixing Seat	1		
31	XG180337873		Joint	1		
32	950400400005		Joint	2		
33	950400200004		Elbow	2		

05 Two Stage Mast Hydraulic Circuit 3 (211546044001)

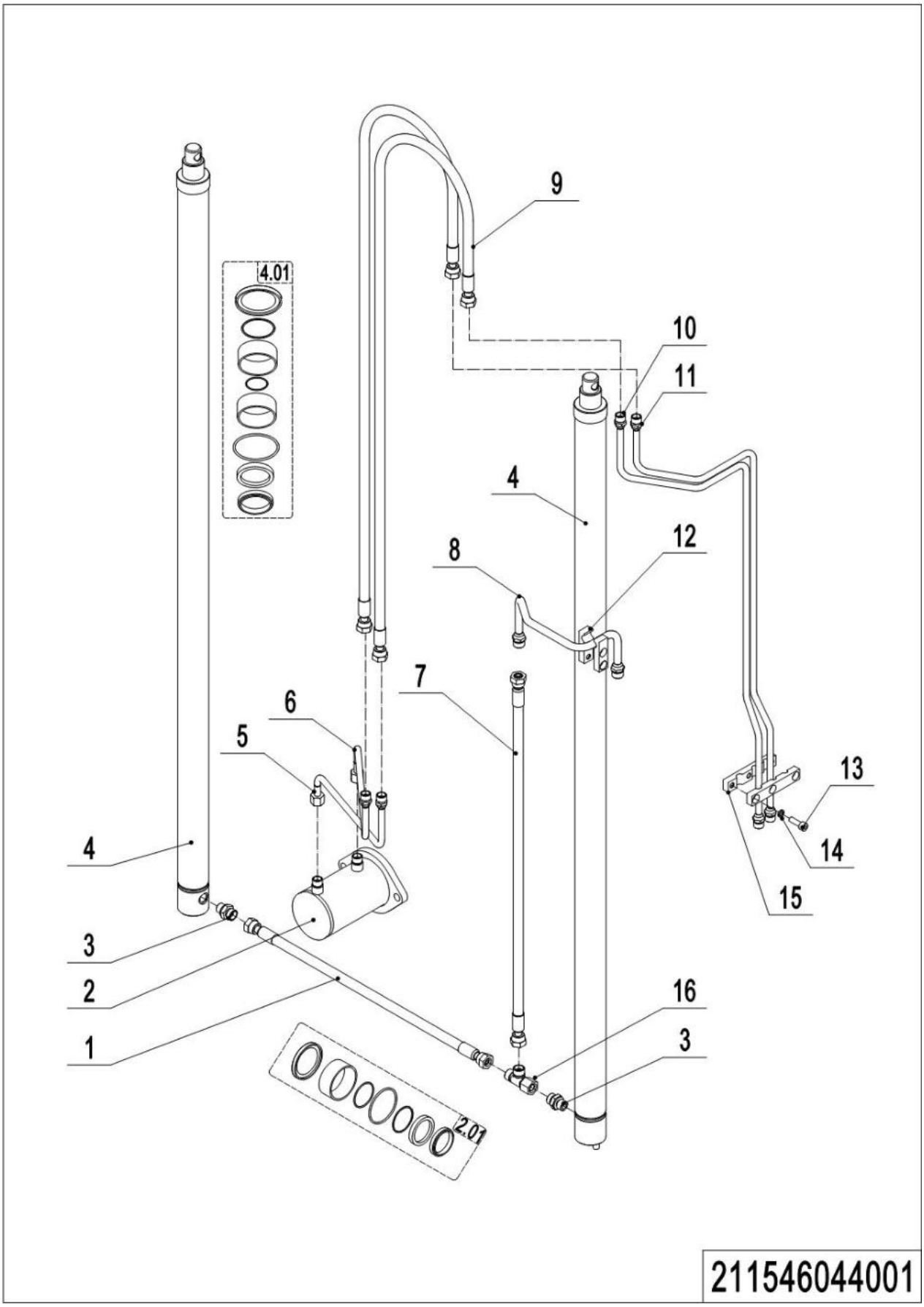

05 Two Stage Mast Hydraulic Circuit 3 (211546044001)

No.	Item Code	Mark	Item Description	Qty.	Substitute	Note
1	201544020002		Hydraulic Pipe Assembly	1		
2	201520510000		Cylinder	1		
2.01	201598510004		Sealing Accessories	1		
3	951000600001		Explosion-proof Valve	2		
4	211544510004		Cylinder	2		3600
4	201544510011		Cylinder	2		3000
4.01	201598510003		Sealing Accessories	1		
5	201544020001		Steel Tube	1		
6	201544020000		Steel Tube	1		
7	211544520001		Hydraulic Pipe Assembly	1		
8	211544520004		Steel Tube	1		
9	211544520015		Hydraulic Pipe Assembly	2		3600
9	211544520018		Hydraulic Pipe Assembly	2		3000
10	211544520002		Steel Tube	1		
11	211544520003		Steel Tube	1		
12	201044520062	1	Pipe Clamp	2		
13	910200200058	1	Screw M8x25	3		
14	910400500006	1	Spring Washer 8	3		
15	201044520022	1	Pipe Clamp	2		
16	950401000001		Elbow	1		

06 Two Stage Mast Hydraulic Circuit 4 (211546044002)

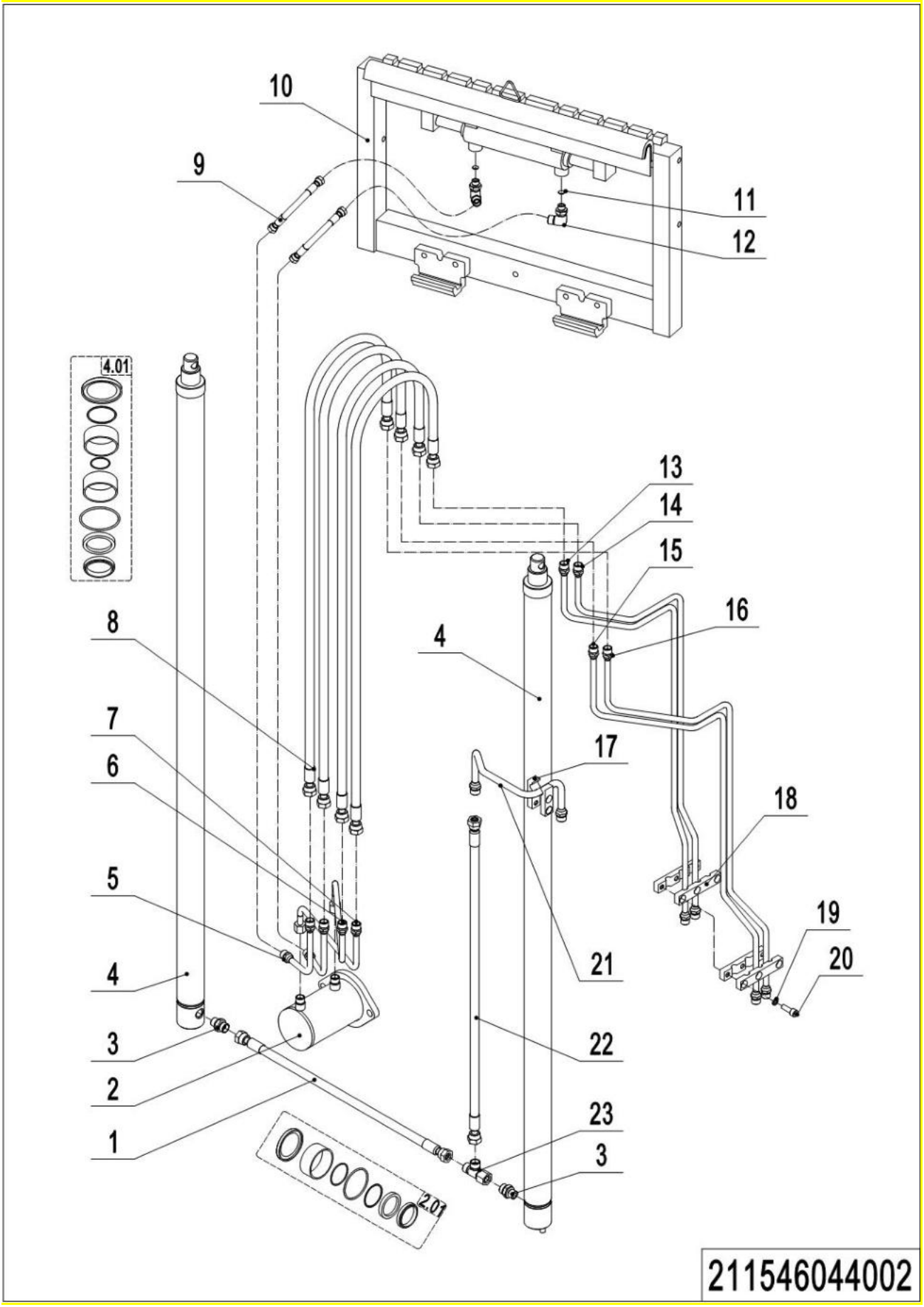

06 Two Stage Mast Hydraulic Circuit 4 (211546044002)

No.	Item Code	Mark	Item Description	Qty.	Substitute	Note
1	201544020002		Hydraulic Pipe Assembly	1		
2	201520510000		Cylinder	1		
2.01	201598510004		Sealing Accessories	1		
3	951000600001		Explosion-proof Valve	2		
4	211544510004		Cylinder	2		3600
4	201544510011		Cylinder	2		3000
4.01	201598510003		Sealing Accessories	1		
5	201027520000		Steel Tube	2		
6	201544020000		Steel Tube	1		
7	201544020001		Steel Tube	1		
8	211544520015		Hydraulic Pipe Assembly	4		3600
8	211544520018		Hydraulic Pipe Assembly	4		3000
9	201030520013		Hydraulic Pipe Assembly	2		
10	940100200008		Side Shifter	1		
11	201030520014	1	Damper	2		
12	950401100003		Joint	2		
13	211544520002		Steel Tube	1		
14	211544520003		Steel Tube	1		
15	211530520001		Steel Tube	1		
16	211530520000		Steel Tube	1		
17	201044520062	1	Pipe Clamp	2		
18	201044520022	1	Pipe Clamp	2		
19	910400500006	1	Spring Washer 8	3		
20	910200200063	1	Screw	3		
21	211544520004		Steel Tube	1		
22	211544520001		Hydraulic Pipe Assembly	1		
23	950401000001		Elbow	1		

07 Three Stage Mast Hydraulic Circuit 3 (211546044504)

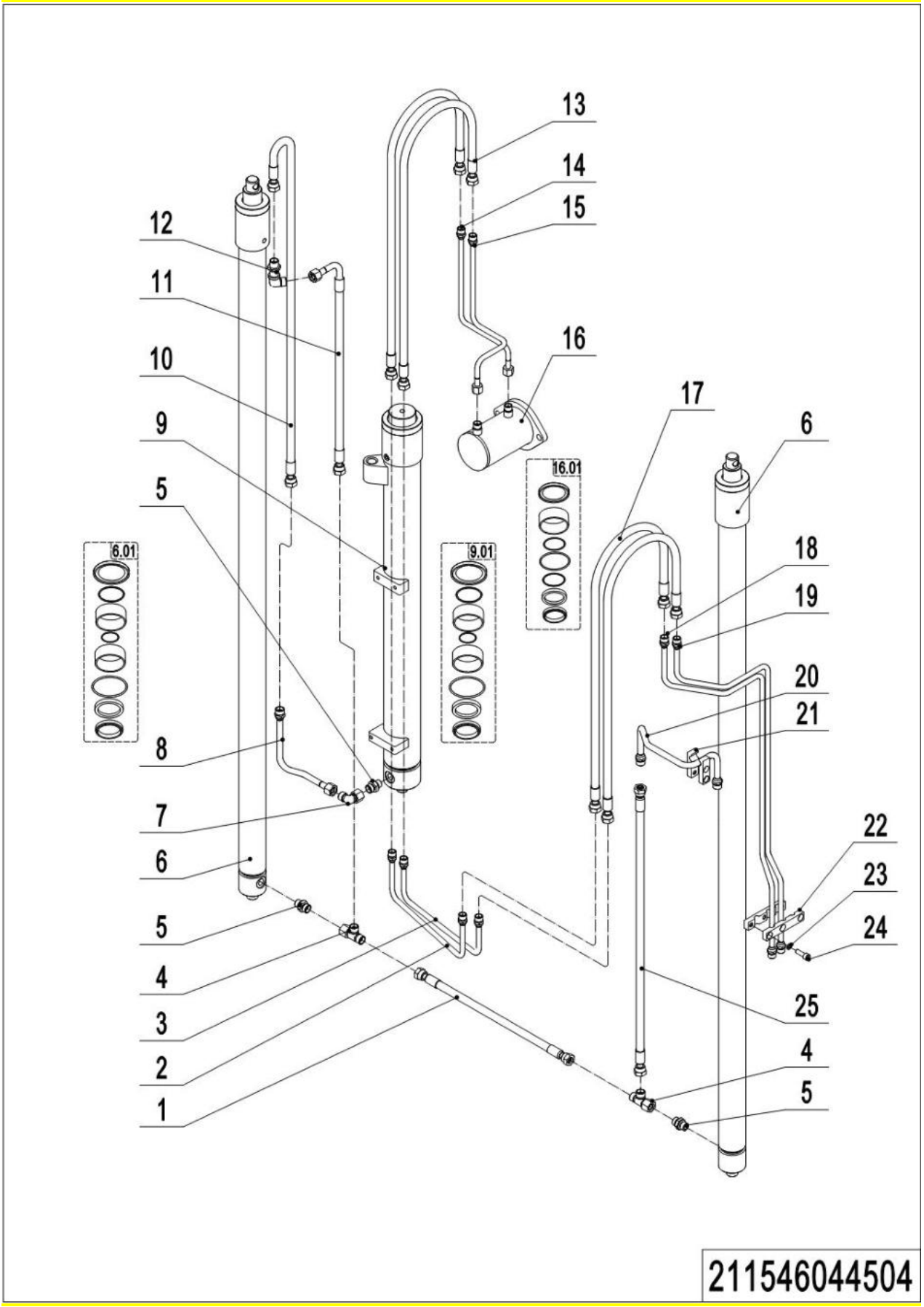

1=package supply; 2=restrict supply; 3=phasing-out supply; 4=supply as assembly; 5=check other tables.

07 Three Stage Mast Hydraulic Circuit 3 (211546044504)

No.	Item Code	Mark	Item Description	Qty.	Substitute	Note
1	201544520034		Hydraulic Pipe Assembly	1		
2	201544520032		Steel Tube	1		
3	201544520031		Steel Tube	1		
4	950401000001		Elbow	2		
5	951000600001		Explosion-proof Valve	3		
6	211544510004		Cylinder	2		5500
6	201544510011		Cylinder	2		4500
6.01	201598510003		Sealing Accessories	1		
7	950400200004		Elbow	1		
8	201544520033		Steel Tube	1		
9	201544510016		Cylinder	1		5500
9	201544510014		Cylinder	1		4500
9.01	201598510002		Sealing Accessories	1		
10	211544520016		Hydraulic Pipe Assembly	1		5500
10	201044520082		Hydraulic Pipe Assembly	1		4500
11	211544520017		Hydraulic Pipe Assembly	1		5500
11	201044520084		Hydraulic Pipe Assembly	1		4500
12	950400600003		Joint	1		
13	201043010017		Hydraulic Pipe Assembly	2		5500
13	201044520080		Hydraulic Pipe Assembly	2		4500
14	201044520073		Steel Tube	1		
15	201044520074		Steel Tube	1		
16	201520510000		Cylinder	1		
16.01	201598510004		Sealing Accessories	1		
17	211544520015		Hydraulic Pipe Assembly	2		5500
17	211544520018		Hydraulic Pipe Assembly	2		4500
18	211544520002		Steel Tube	1		
19	211544520003		Steel Tube	1		
20	211544520004		Steel Tube	1		
21	201044520062		Pipe Clamp	2		

07 Three Stage Mast Hydraulic Circuit 3 (211546044504) Continuation

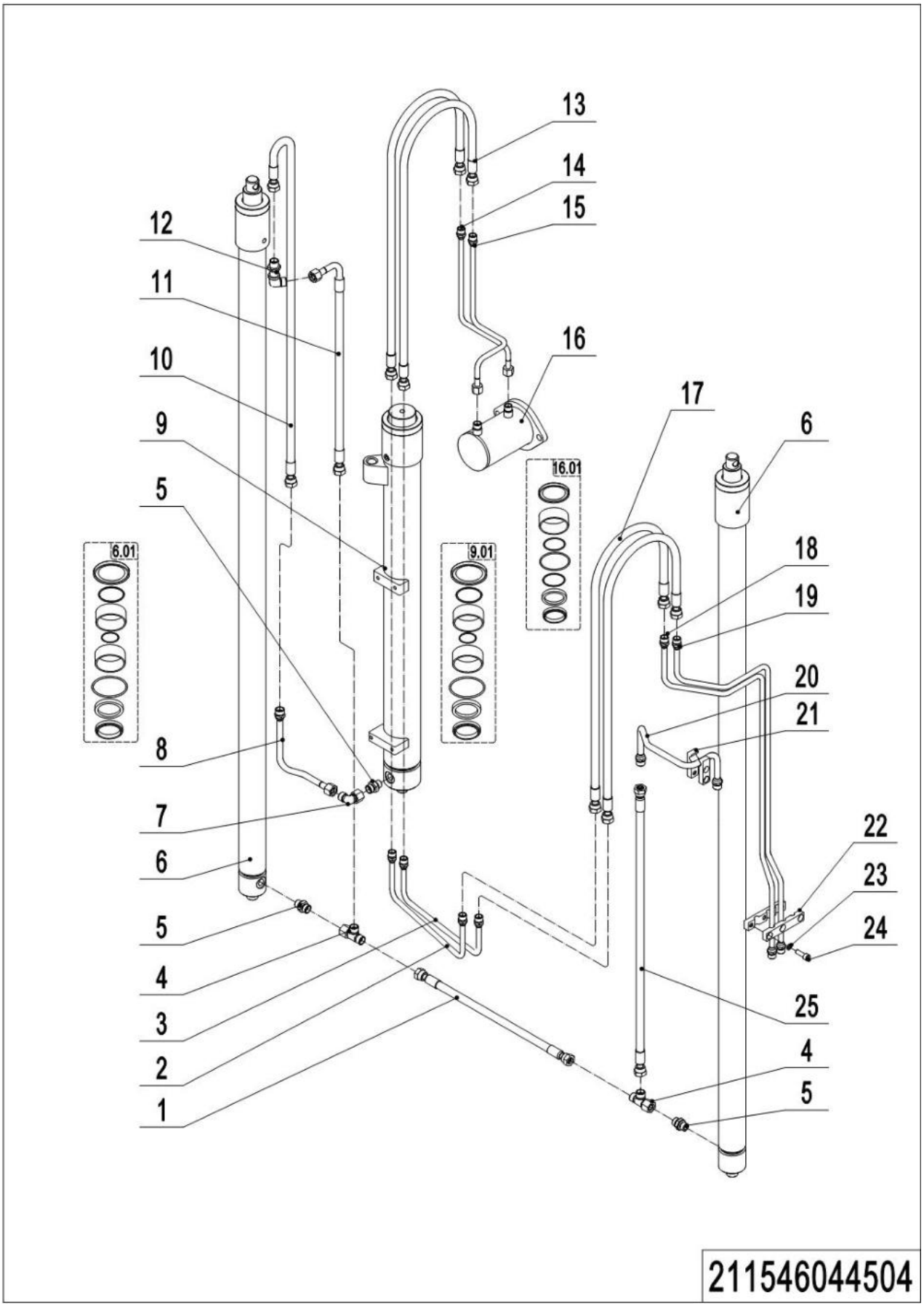

1=package supply; 2=restrict supply; 3=phasing-out supply; 4=supply as assembly; 5=check other tables.

07 Three Stage Mast Hydraulic Circuit 3 (211546044504) Continuation

No.	Item Code	Mark	Item Description	Qty.	Substitute	Note
22	201044520022	1	Pipe Clamp	2		4500
23	910400500006	1	Spring Washer 8	3		
24	910200200058	1	Screw M8x25	3		
25	211544520001		Hydraulic Pipe Assembly	1		

08 Three Stage Mast Hydraulic Circuit 4 (211546044505)

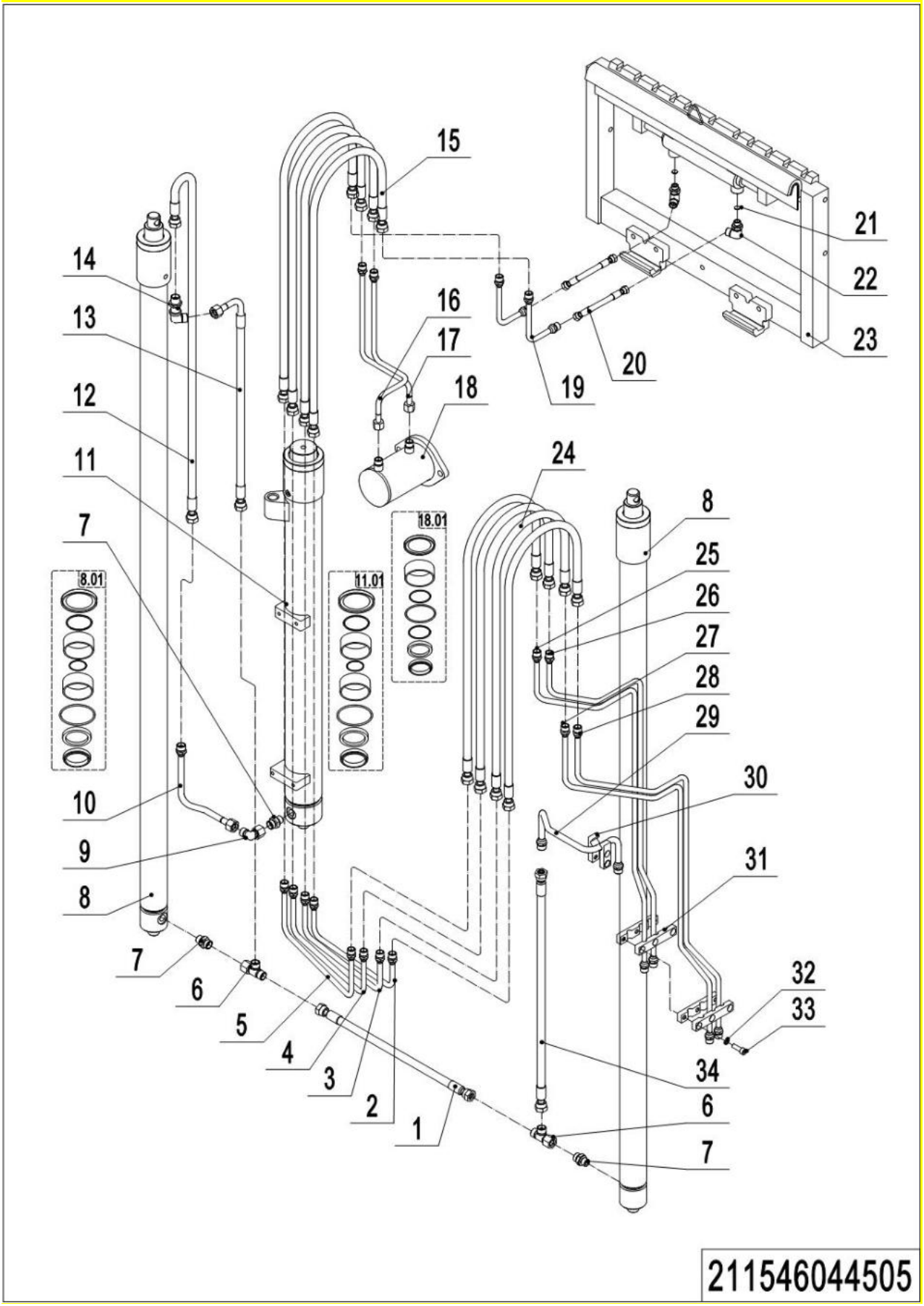

08 Three Stage Mast Hydraulic Circuit 4 (211546044505)

No.	Item Code	Mark	Item Description	Qty.	Substitute	Note
1	201544520034		Hydraulic Pipe Assembly	1		
2	201530520003		Steel Tube	1		
3	201530520002		Steel Tube	1		
4	201530520001		Steel Tube	1		
5	201530520000		Steel Tube	1		
6	950401000001		Elbow	2		
7	951000600001		Explosion-proof Valve	3		
8	211544510004		Cylinder	2		5500
8	201544510011		Cylinder	2		4500
8.01	201598510003		Sealing Accessories	1		
9	950400200004		Elbow	1		
10	201544520033		Steel Tube	1		
11	201544510016		Cylinder	1		5500
11	201544510014		Cylinder	1		4500
11.01	201598510002		Sealing Accessories	1		
12	211544520016		Hydraulic Pipe Assembly	1		5500
12	201044520082		Hydraulic Pipe Assembly	1		4500
13	211544520017		Hydraulic Pipe Assembly	1		5500
13	201044520084		Hydraulic Pipe Assembly	1		4500
14	950400600003		Joint	1		
15	201043010017		Hydraulic Pipe Assembly	4		5500
15	201044520080		Hydraulic Pipe Assembly	4		4500
16	201044520073		Steel Tube	1		
17	201044520074		Steel Tube	1		
18	201520510000		Cylinder	1		
18.01	201598510004		Sealing Accessories	1		
19	201030520012		Steel Tube	2		
20	201030520013		Hydraulic Pipe Assembly	2		
21	201030520014	1	Damper	2		
22	950401100003		Joint	2		

08 Three Stage Mast Hydraulic Circuit 4 (211546044505) Continuation

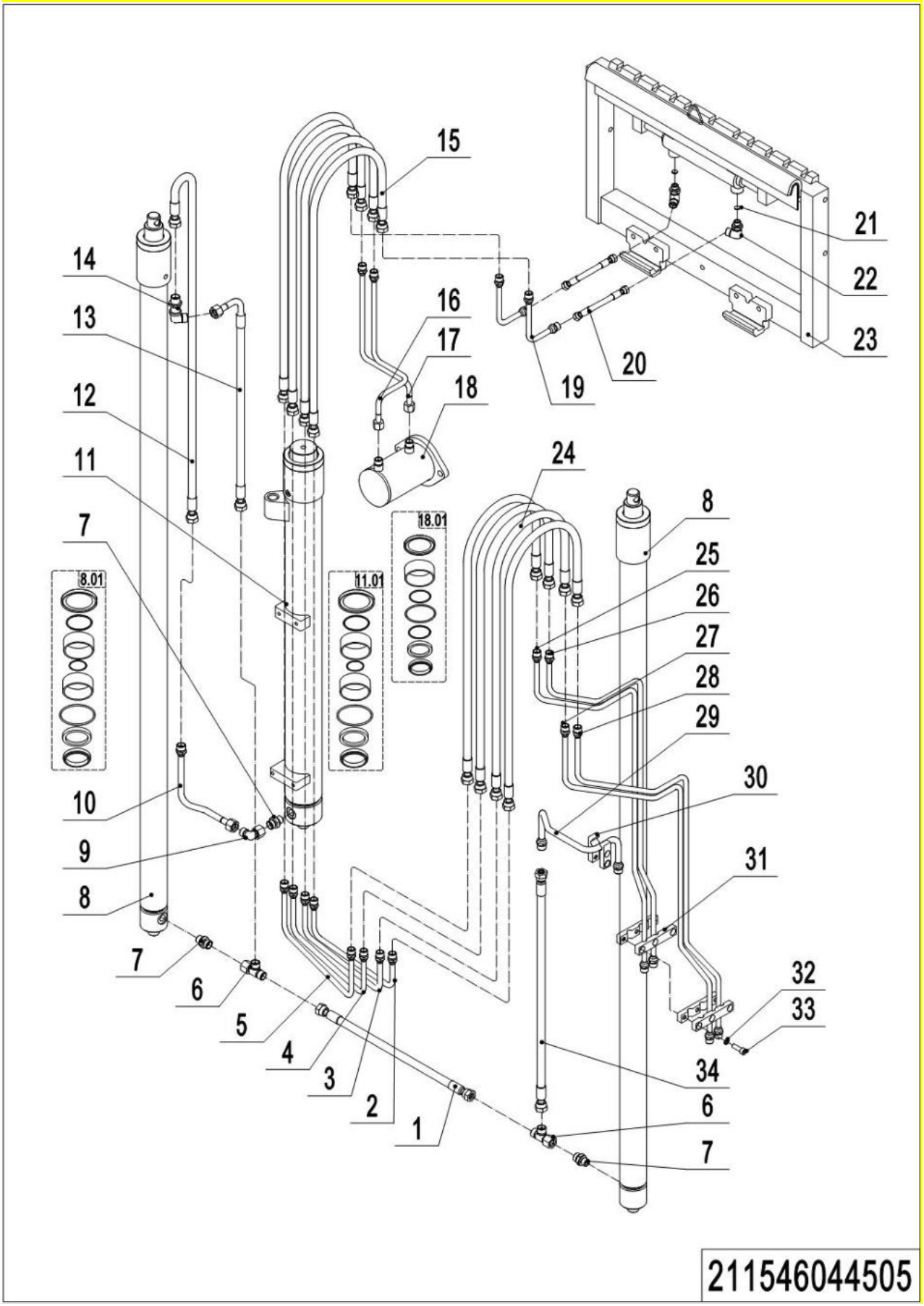

08 Three Stage Mast Hydraulic Circuit 4 (211546044505) Continuation

No.	Item Code	Mark	Item Description	Qty.	Substitute	Note
23	940100200008		Side Shifter	1		
24	211544520015		Hydraulic Pipe Assembly	4		5500
24	211544520018		Hydraulic Pipe Assembly	4		4500
25	211544520002		Steel Tube	1		
26	211544520003		Steel Tube	1		
27	211530520001		Steel Tube	1		
28	211530520000		Steel Tube	1		
29	201044520062	1	Pipe Clamp	2		
30	201044520022	1	Pipe Clamp	2		
31	910400500006	1	Spring Washer 8	3		
32	910200200063	1	Screw	3		
33	211544520004		Steel Tube	1		
34	211544520001		Hydraulic Pipe Assembly	1		

09 Oil Tank (211546019001)

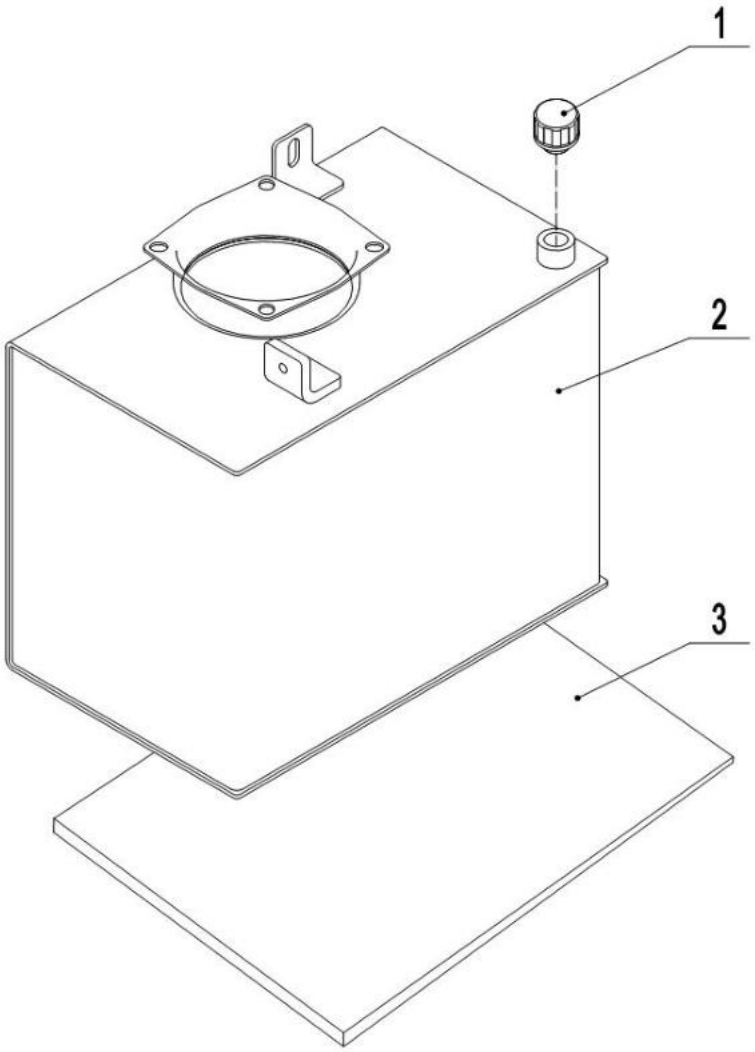

211546019001

09 Oil Tank (211546019001)

No.	Item Code	Mark	Item Description	Qty.	Substitute	Note
1	951100200001		Vent Plug	1		
2	211519010000		Oil Tank	1		
3	206023520000		Rubber Mat	1		

10 Pump Unit (4.0Kw, 4.2cc) (211546023501)

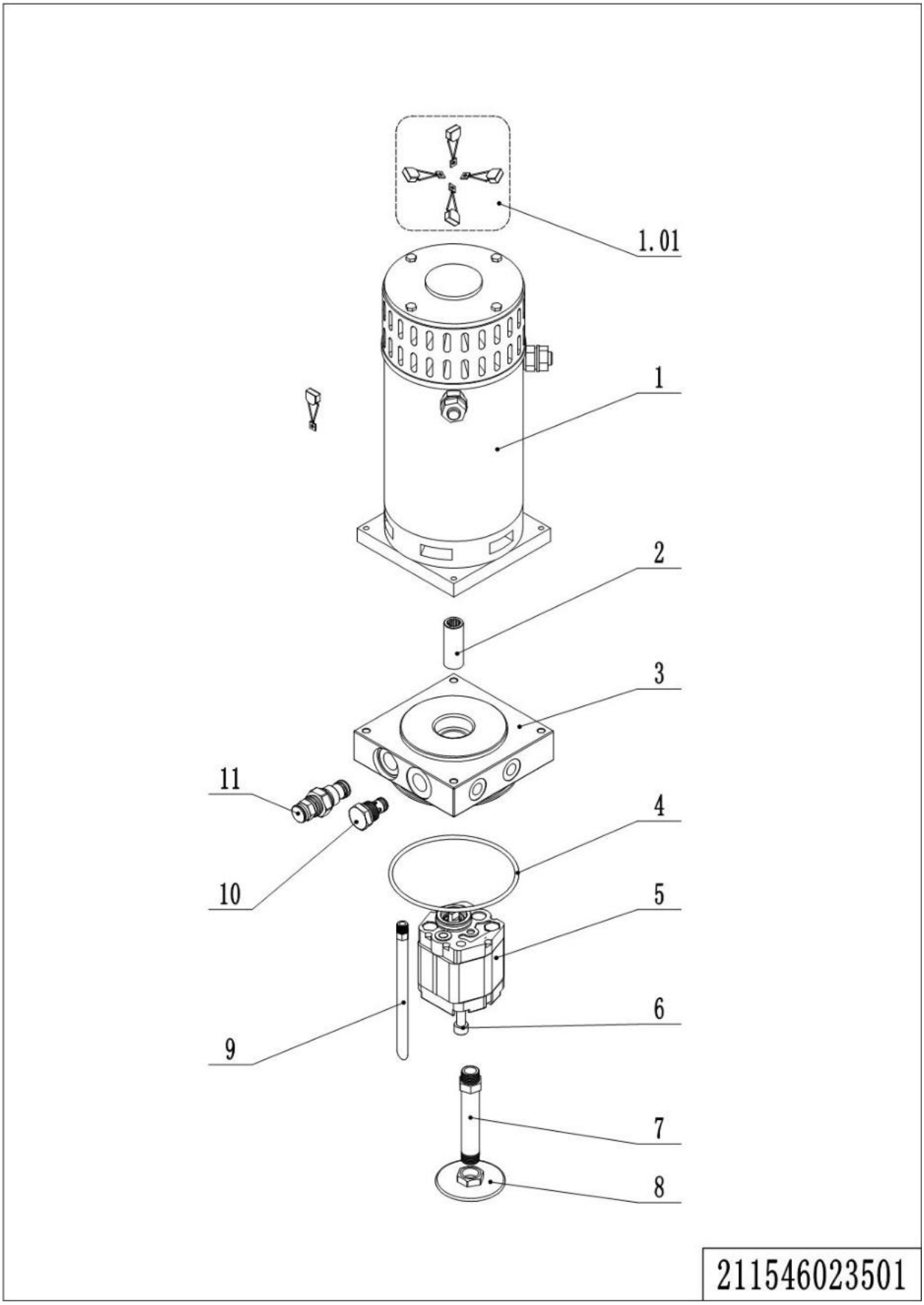

10 Pump Unit (4.0Kw, 4.2cc) (211546023501)

No.	Item Code	Mark	Item Description	Qty.	Substitute	Note
1	206098510016		Motor	1		
1.01	206098510022		Carbon Brush	1		
2	206098520106		Coupling	1		
3	211598520000		Valve Block	1		
4	206098520107		O-Ring	1		
5	206098510018		Pump	1		
6	206098520110		Bolt	2		
7	206098520109		Oil Hose	1		
8	206098510019		Filter	1		
9	206098520108		Oil Hose	1		
10	206098510020		Check Valve	1		
11	206098510021		Overflow Valve	1		

Chapter 3: Truck Structure

01 Truck Frame (211546021501)

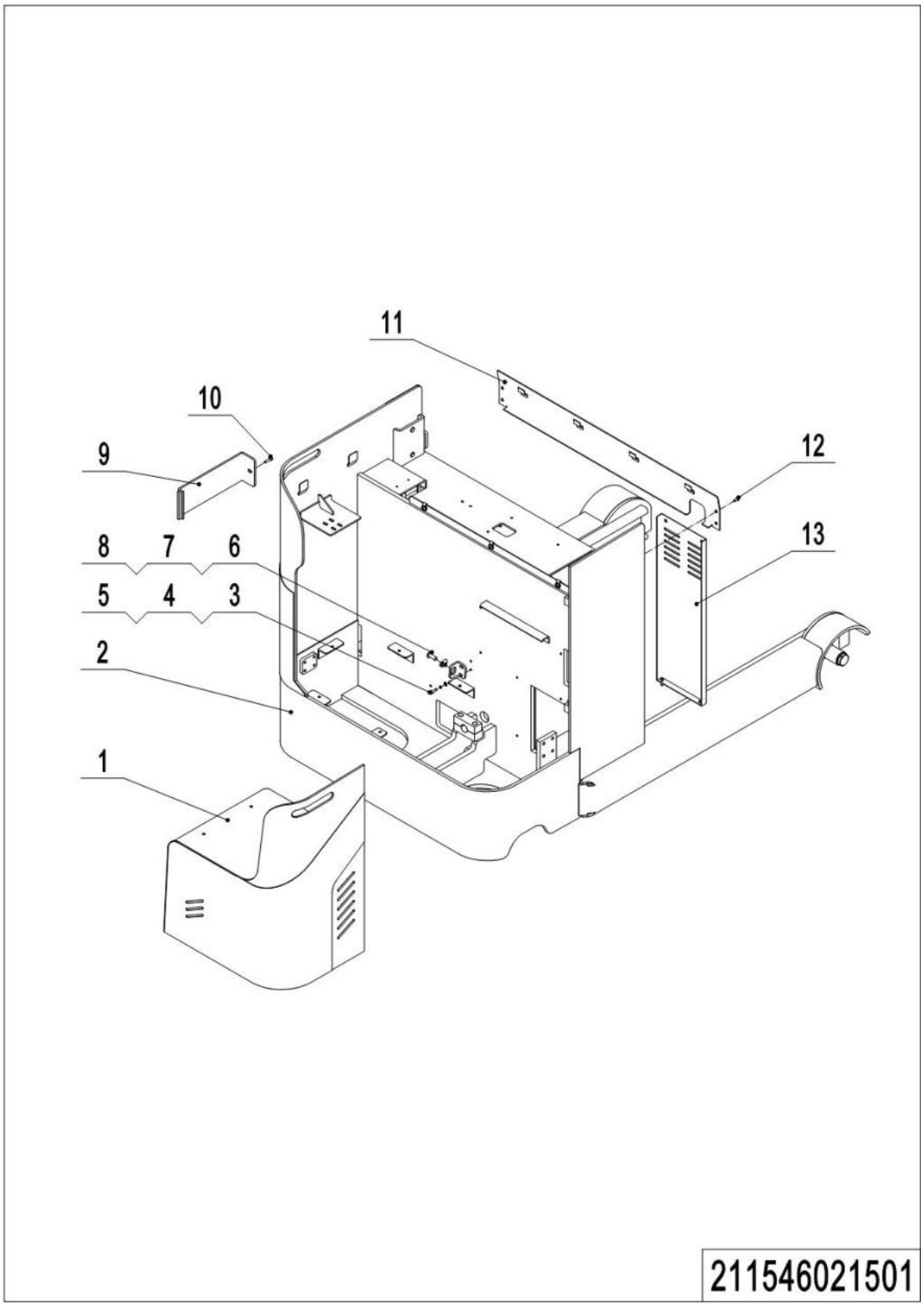

01 Truck Frame (211546021501)

No.	Item Code	Mark	Item Description	Qty.	Substitute	Note
1	211521510004		Cover	1		
2	211521510000		Chassis	1		
3	910200200055		Screw M8x16	1		
4	910400500006		Spring Washer 8	1		
5	910400100006		Flat Washer 8	1		
6	910200300025		Screw M8x20	1		
7	940400400002		Cage Nut Nut M8	1		
8	211521520041		Fixing Plate	1		
9	211521510001		Baffle	1		
10	911000300004		Handle	1		
11	211521510002		Guard Plate	1		
12	910200300023		Screw M8x12	6		
13	211521510003		Shield	1		

02 Overhead Guard (211546022001)

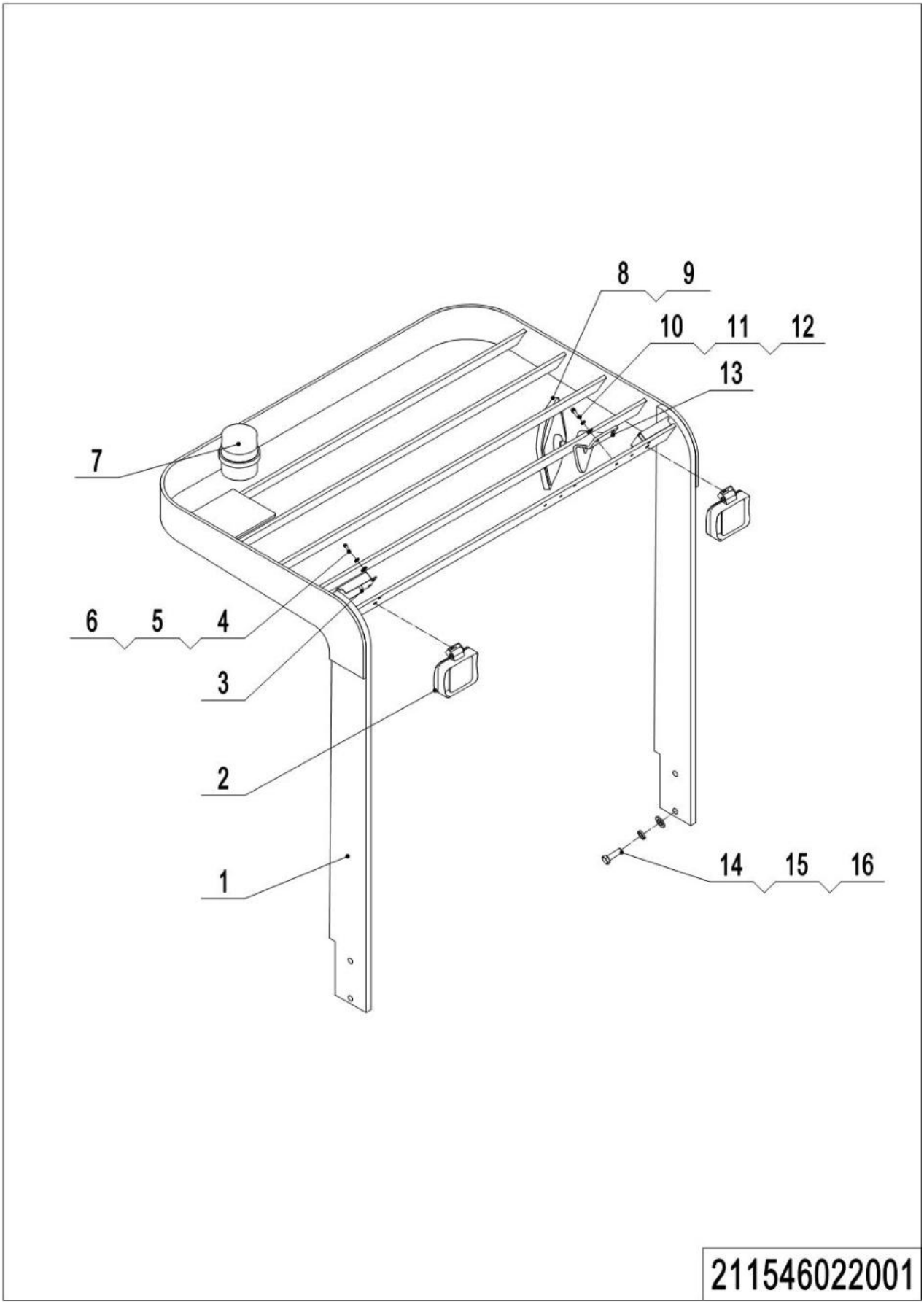

02 Overhead Guard (211546022001)

No.	Item Code	Mark	Item Description	Qty.	Substitute	Note
1	211522010000		Overhead Guard	1		
2	922000100001		Light	2		
3	211522020005		Shield	2		
4	910200200033		Screw M6x12	4		
5	910400500005		Spring Washer 6	4		
6	910400100005		Flat Washer 6	4		
7	922000100004		Light	1		
8	940800100001		Rearview Mirror	1		
9	910300100006		Nut M8	1		
10	910200200058		Screw M8x25	2		
11	910400500004		Spring Washer 5	2		
12	910400100004		Flat Washer 5	2		
13	218022020000		Fixing Bracket	1		
14	910100300069		Bolt M16x35	4		
15	910400500010		Spring Washer16	4		
16	910400100010		Flat Washer16	4		

03 Pedal (211546018001)

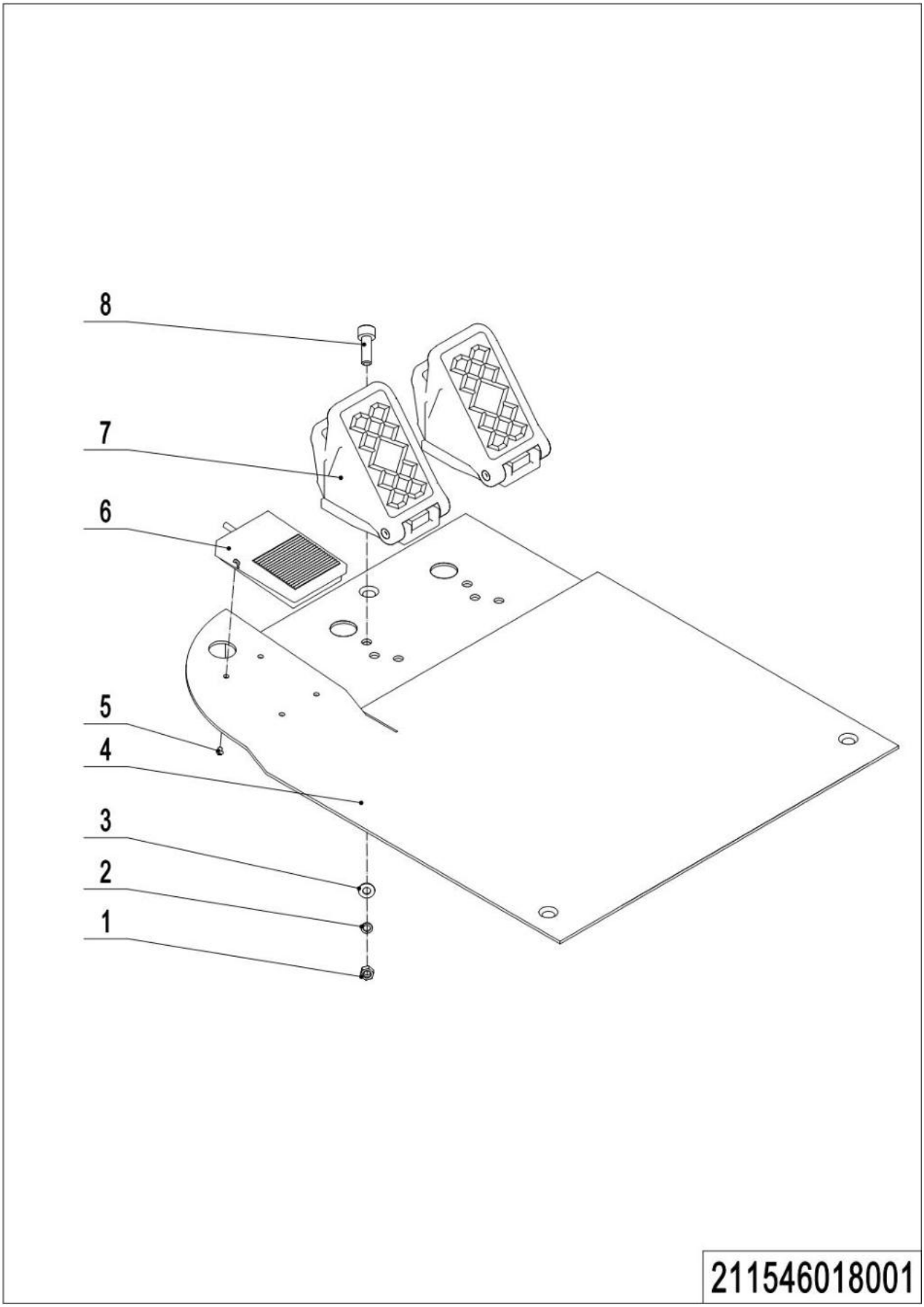

1=package supply; 2=restrict supply; 3=phasing-out supply; 4=supply as assembly; 5=check other tables.

03 Pedal (211546018001)

No.	Item Code	Mark	Item Description	Qty.	Substitute	Note
1	910300100006		Nut M8	6		
2	910400500006		Spring Washer 8	6		
3	910400100006		Flat Washer 8	6		
4	211518010000		Pedal	1		
5	910200500022		Screw M4x12	4		
6	921700100017		Accelerator	1		
7	921700100017		Accelerator	2		
8	910200200058		Screw M8x25	6		

04 Seat (211546037501)

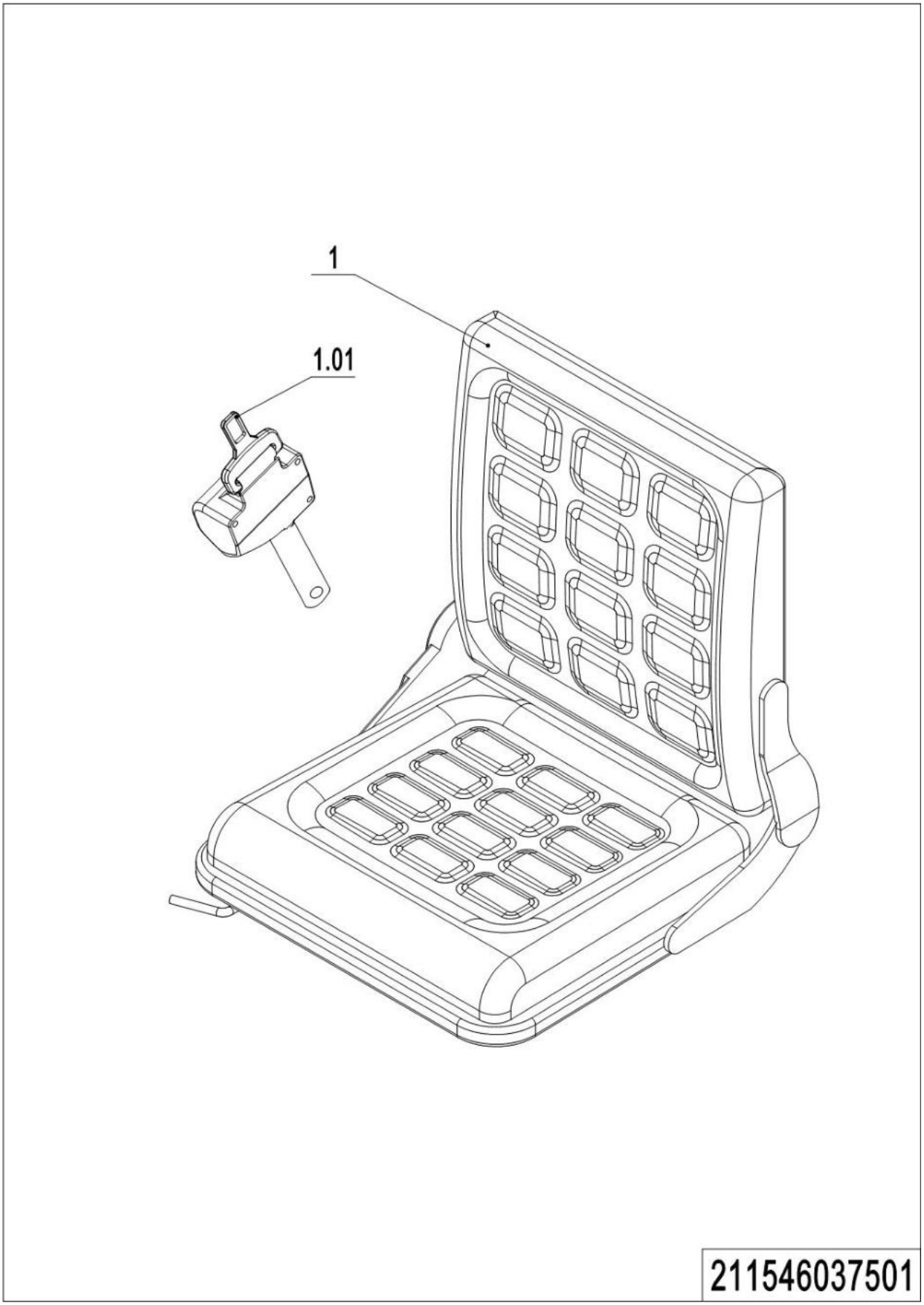

04 Seat (211546037501)

No.	Item Code	Mark	Item Description	Qty.	Substitute	Note
1	213237510000		Seat	1		
1.01	211598520001		Seat belt	1		

Chapter 4: Mast

01 Outer Mast (Two/Three Stage Mast) (211546044501)

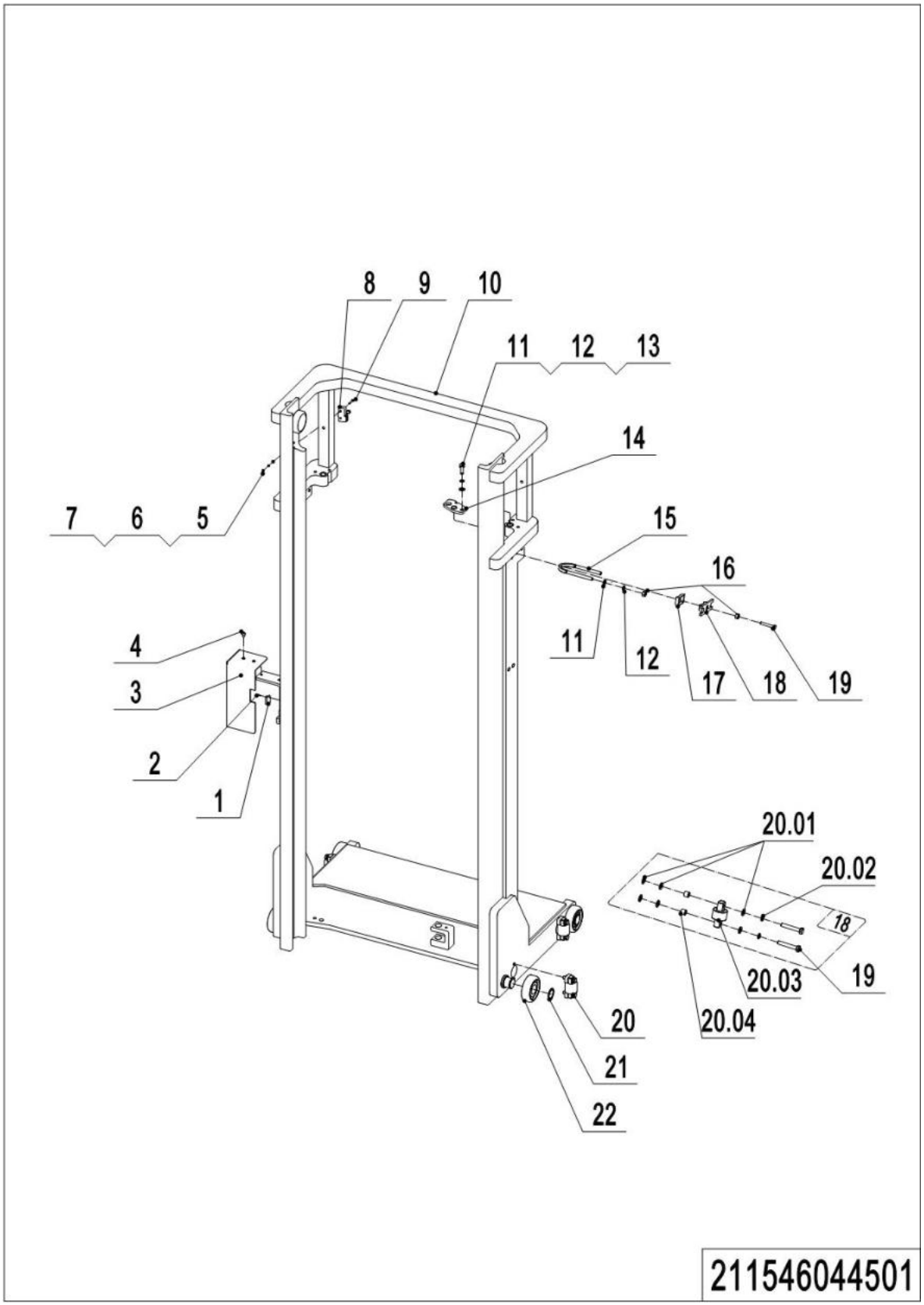

01 Outer Mast (Two/Three Stage Mast) (211546044501)

No.	Item Code	Mark	Item Description	Qty.	Substitute	Note
1	920200500001		Magnetic Switch	1		
2	910200300003	1	Screw M3x10	2		
3	211544520000		Protective Cover	1		
4	910200300023	1	Screw M8x12	2		
5	910300500001	1	Nut M4	2		
6	910400500003	1	Spring Washer 4	2		
7	910400100003	1	Flat Washer 4	2		
8	920200300001		Micro Switch	1		
9	910200500028	1	Screw M4x30	2		
10	211544510000		Outer Mast (5500)	1		5500/3600
10	211544510001		Outer Mast (4500)	1		4500/3000
11	910400100007		Flat Washer 10	6		
12	910400500007		Spring Washer 10	6		
13	910200200075		Screw M10x20	2		
14	201044520029		Mounting Plate	2		
15	201044520017		Bolt	2		
16	910300100007	1	Nut M10	6		
17	255044020129		Protective Cover	2		
18	255044020130		Fixing Seat	2		
19	910200200079	1	Screw M10x40	10		
20	213098510003		Roller	4		
20.01	910400100007	1	Flat Washer 10	6		
20.02	910400500007	1	Spring Washer 10	2		
20.03	940200200007		Side Roller	1		
20.04	940600500017	1	Washer	2		
21	910401300018	1	Circlip 35	4		
22	940200100006		Main Roller	4		

02 Middle Mast (Three Stage Mast) (211546044502)

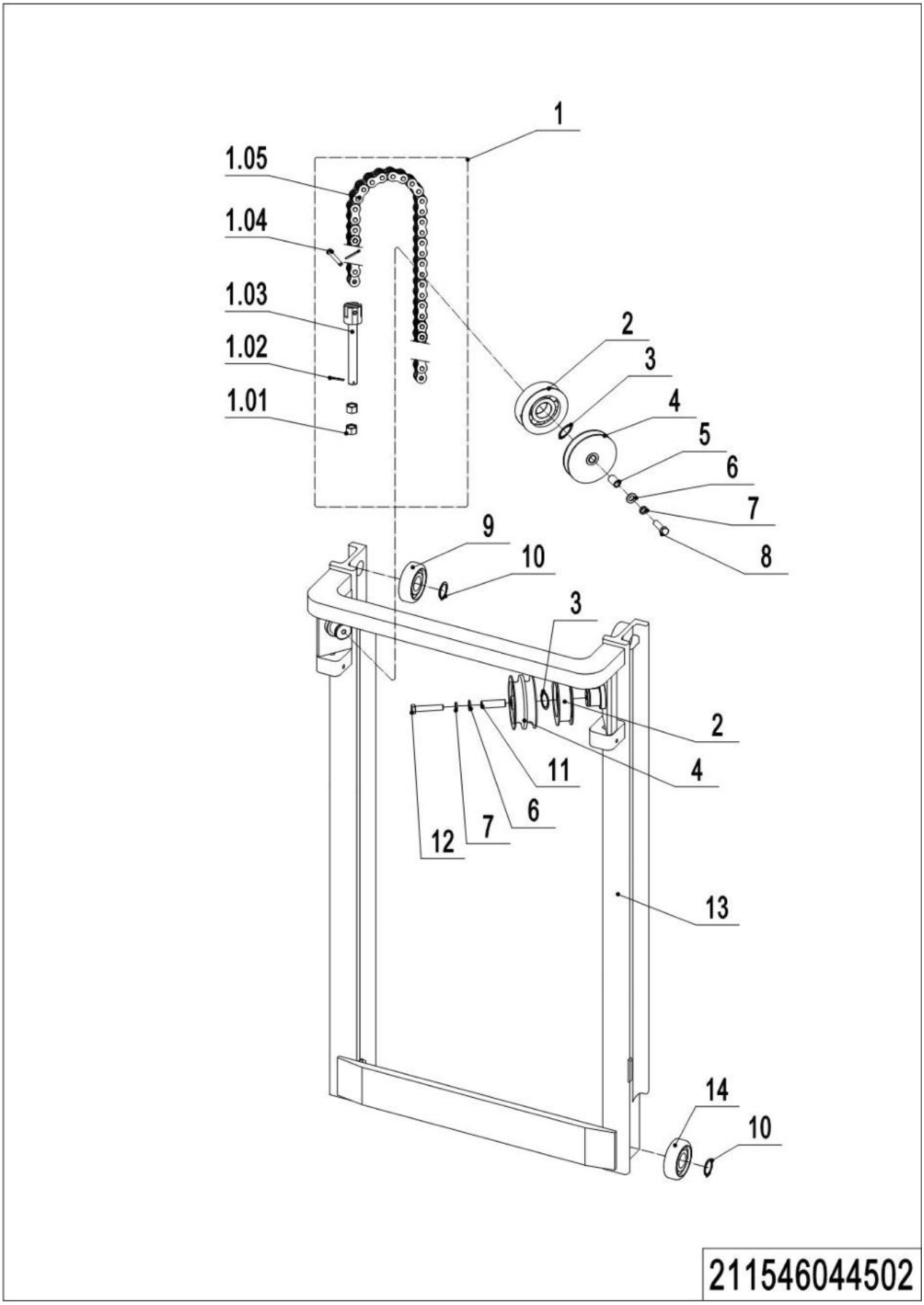

02 Middle Mast (Three Stage Mast) (211546044502)

No.	Item Code	Mark	Item Description	Qty.	Substitute	Note
1	211544510007		Chain	2		5500
1	201044510012		Chain	2		4500
1.01	910300200008	1	Nut M16x1.5	2		
1.02	910600600030	1	Cotter Pin	2		
1.03	532644020096		Chain Bolt	1		
1.04	910600700029	1	Pin	2		
1.05	211544510008		Chain	1		5500
1.05	201044510017		Chain	1		4500
2	940200500001		Sprocket Bearing	2		
3	910401300020		Circlip 40	2		
4	201044520040		Pulley	3		
5	201044520041	1	Bushing	1		
6	910400100008	1	Flat Washer 12	2		
7	910400500008	1	Spring Washer 12	2		
8	910100300052	1	Bolt M12x40	1		
9	940200300004		Compound Roller	2		
10	910401300018		Circlip 35	4		
11	201044520039	1	Bushing	1		
12	910100300057	1	Bolt M12x70	1		
13	211544510002		Middle Mast (5500)	1		5500
13	201544510004		Middle Mast (4500)	1		4500
14	940200300007		Compound Roller	2		

03 Inner Mast (Three Stage Mast) (211546044503)

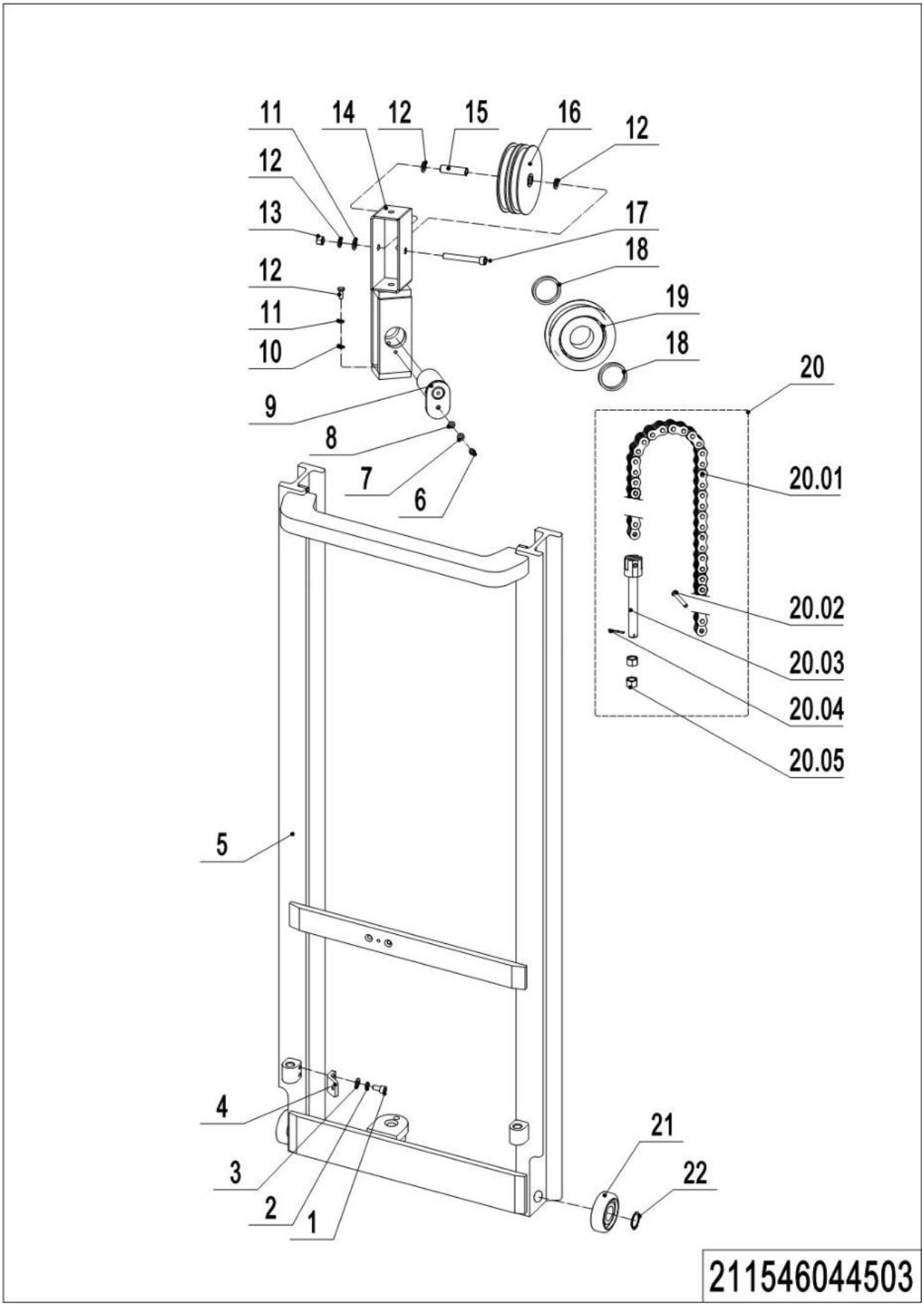

03 Inner Mast (Three Stage Mast) (211546044503)

No.	Item Code	Mark	Item Description	Qty.	Substitute	Note
1	910200200058	1	Screw M8x25	1		
2	910400500006	1	Spring Washer 8	1		
3	910400100006	1	Flat Washer 8	1		
4	201044520060		Mounting Plate	1		
5	211544510003		Inner Mast (5500)	1		5500
5	201544510007		Inner Mast (4500)	1		4500
6	910200200058	1	Screw M8x25	1		
7	910400500006	1	Spring Washer 8	1		
8	910400100006	1	Flat Washer 8	1		
9	201044510000		Trunnion	1		
10	910400100008	1	Flat Washer 12	1		
11	910400500008	1	Spring Washer 12	4		
12	910200200098	1	Screw M12x30	1		
13	910300100008	1	Nut M12	1		
14	201044510001		Sprocket Holder	1		
15	201044520053		Bushing	1		
16	201044520040		Pulley	2		
17	910100100056	1	Bolt M12x90	1		
18	201044520056		Spacer	2		
19	940200500007		Sprocket Bearing	1		
20	211544510006		Chain	1		5500
20	201044510014		Chain	1		4500
20.01	211544510009		Chain	1		5500
20.01	201044510016		Chain	1		4500
20.02	910600700029	1	Pin	2		
20.03	532644020096		Chain Bolt	1		
20.04	910600600030	1	Cotter Pin	2		
20.05	910300200008	1	Nut M16x1.5	2		
21	940200300004		Compound Roller	2		
22	910401300018		Circlip 35	2		

04 Inner Mast (Two Stage Mast) (211546044001)

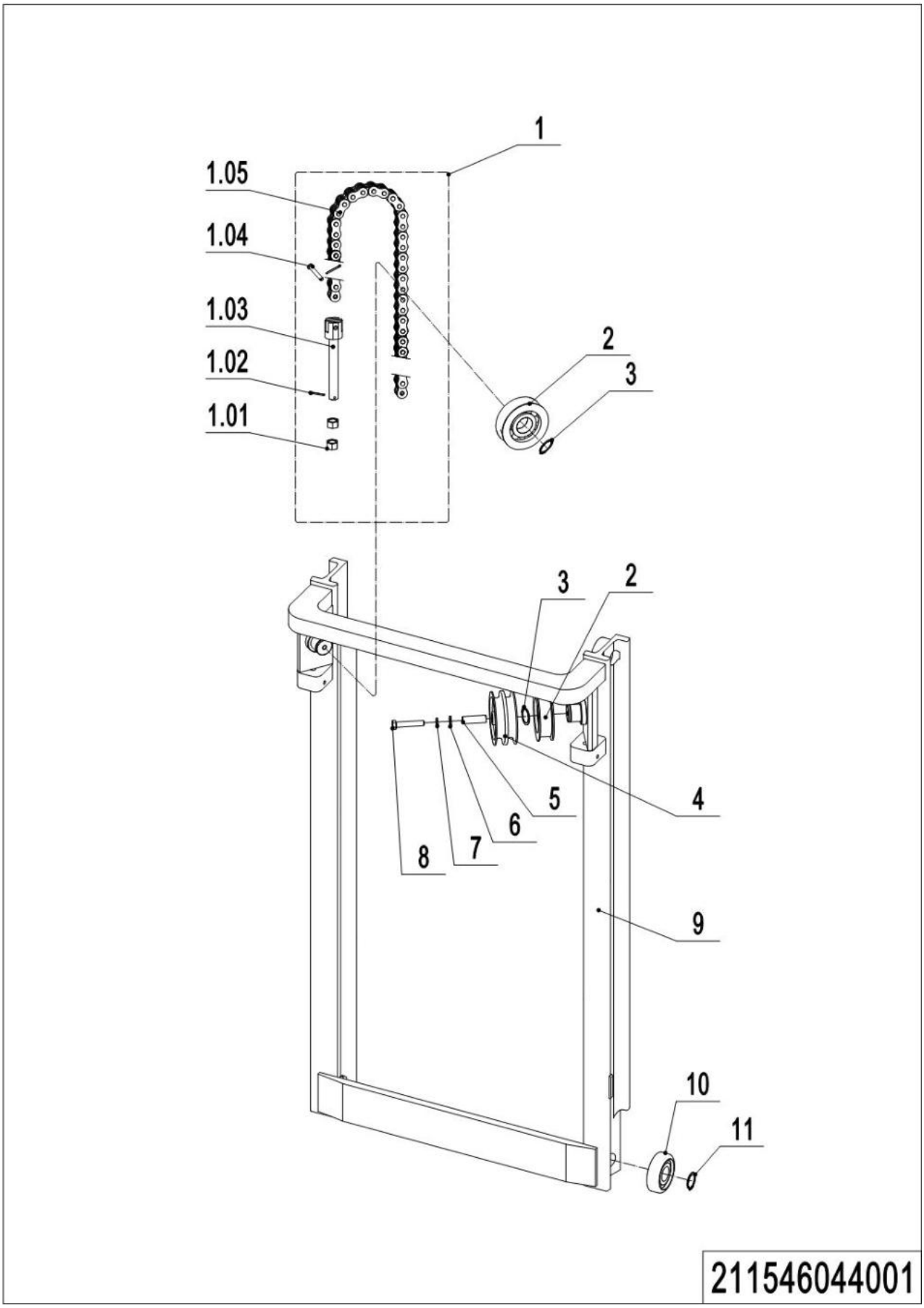

04 Inner Mast (Two Stage Mast) (211546044001)

No.	Item Code	Mark	Item Description	Qty.	Substitute	Note
1	211544510007		Chain	2		3600
1	201044510012		Chain	2		3000
1.01	910300200008	1	Nut M16x1.5	2		
1.02	910600600030	1	Cotter Pin	2		
1.03	532644020096		Chain Bolt	1		
1.04	910600700029	1	Pin	2		
1.05	211544510008		Chain	1		3600
1.05	201044510017		Chain	1		3000
2	940200500001		Sprocket Bearing	2		
3	910401300020		Circlip 40	2		
4	201044520040		Pulley	3		
5	201044520039		Bushing	1		
6	910400100008	1	Flat Washer 12	2		
7	910400500008	1	Spring Washer 12	2		
8	910100300057	1	Bolt M12x70	1		
9	211544010000		Inner Mast (3600)	1		3600
9	201544010000		Inner Mast (3000)	1		3000
10	940200300007		Compound Roller	2		
11	910401300018		Circlip 35	2		

05 Fork Carriage (Two Stage Mast) (201546038002)

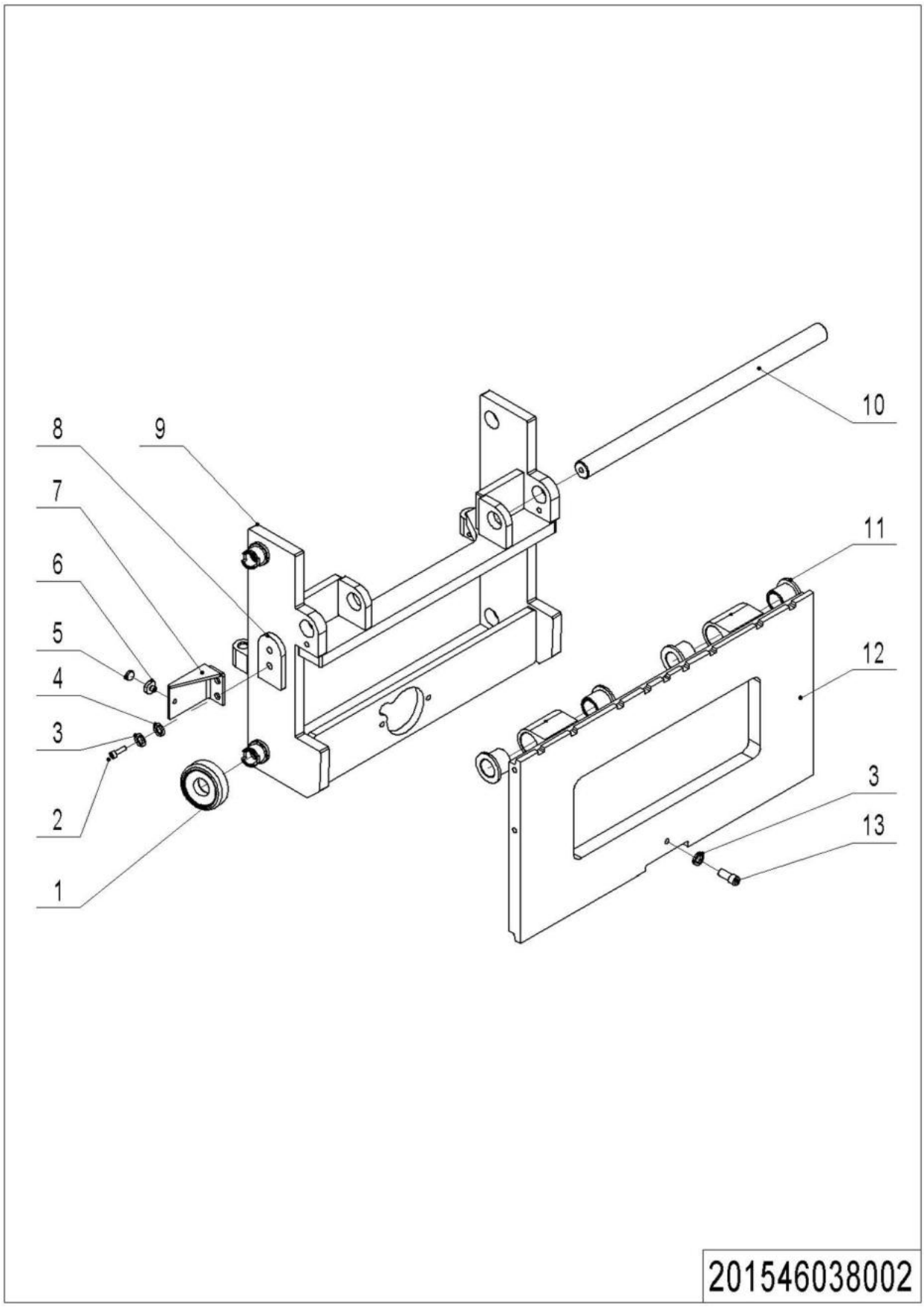

05 Fork Carriage (Two Stage Mast) (201546038002)

No.	Item Code	Mark	Item Description	Qty.	Substitute	Note
1	940200300012		Compound Roller	4		
2	910100300050	1	Bolt M12x30	4		
3	910400500008	1	Spring Washer 12	5		
4	910400100008	1	Flat Washer 12	4		
5	940600100001		Magnetic Steel	1		
6	940600200001		Mounting Seat	1		
7	201538020010		Fixing Plate	1		
8	201038020010		Baffle	2		
9	201538010002		Inner Carriage	1		
10	201038020030		Axle	1		
11	940500400002		Self-lubricating Bearing	4		
12	201538010003		Fork Carriage	1		
13	910200200098	1	Screw M12x30	1		

06 Fork Carriage (Three Stage Mast) (201546038003)

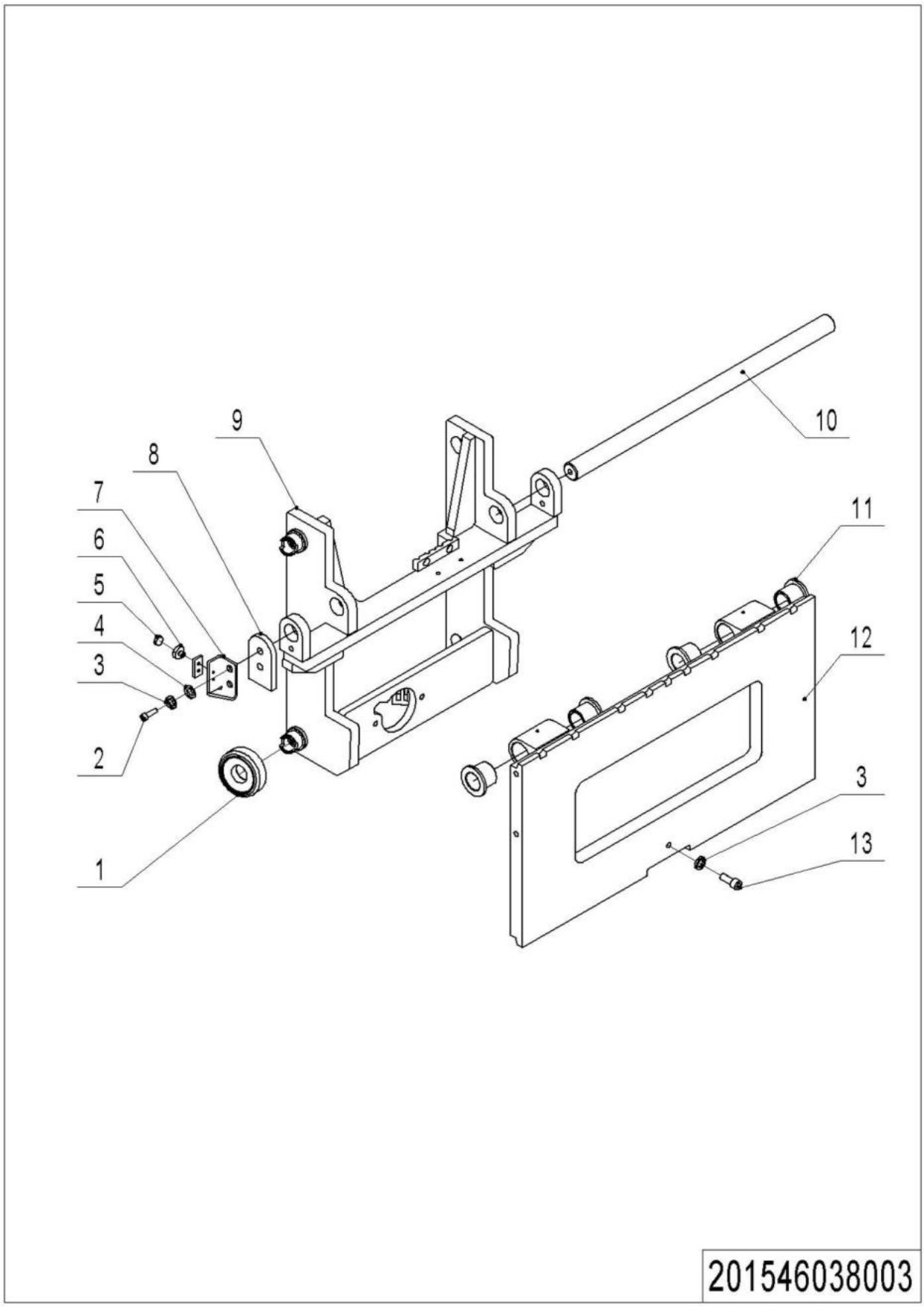

06 Fork Carriage (Three Stage Mast) (201546038003)

No.	Item Code	Mark	Item Description	Qty.	Substitute	Note
1	940200300012		Compound Roller	4		
2	910100300050	1	Bolt M12x30	4		
3	910400500008	1	Spring Washer 12	5		
4	910400100008	1	Flat Washer 12	4		
5	940600100001		Magnetic Steel	1		
6	940600200001		Mounting Seat	1		
7	201538020021		Fixing Plate	1		
8	201038020010		Baffle	2		
9	201538010000		Inner Carriage	1		
10	201538020000		Axle	1		
11	940500400002		Self-lubricating Bearing	4		
12	201538010001		Fork Carriage	1		
13	910200200098	1	Screw M12x30	1		

Chapter 5: Steering system, braking system and wheels

01 Load Wheel (202046017001)

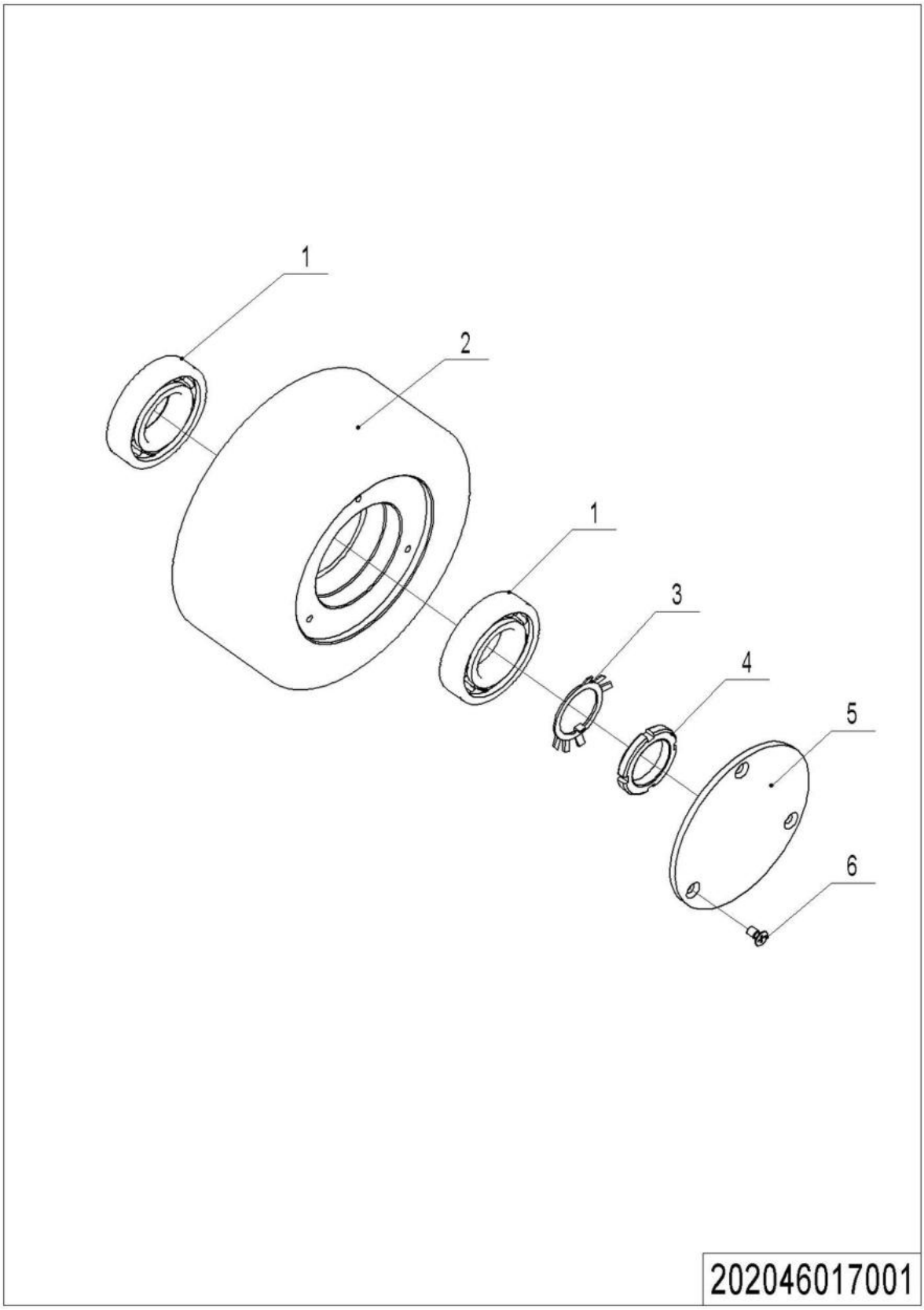

01 Load Wheel (202046017001)

No.	Item Code	Mark	Item Description	Qty.	Substitute	Note
1	910700200025		Bearing	2		
2	940300300025		Wheel Φ230x100	1		
3	910400900007		Lock Washer 36	1		
4	910300700002		Nut M36x1.5	1		
5	201017020000		End Cap	1		
6	910200400016	1	Screw M6x12	3		

02 Side Wheel (211546016501)

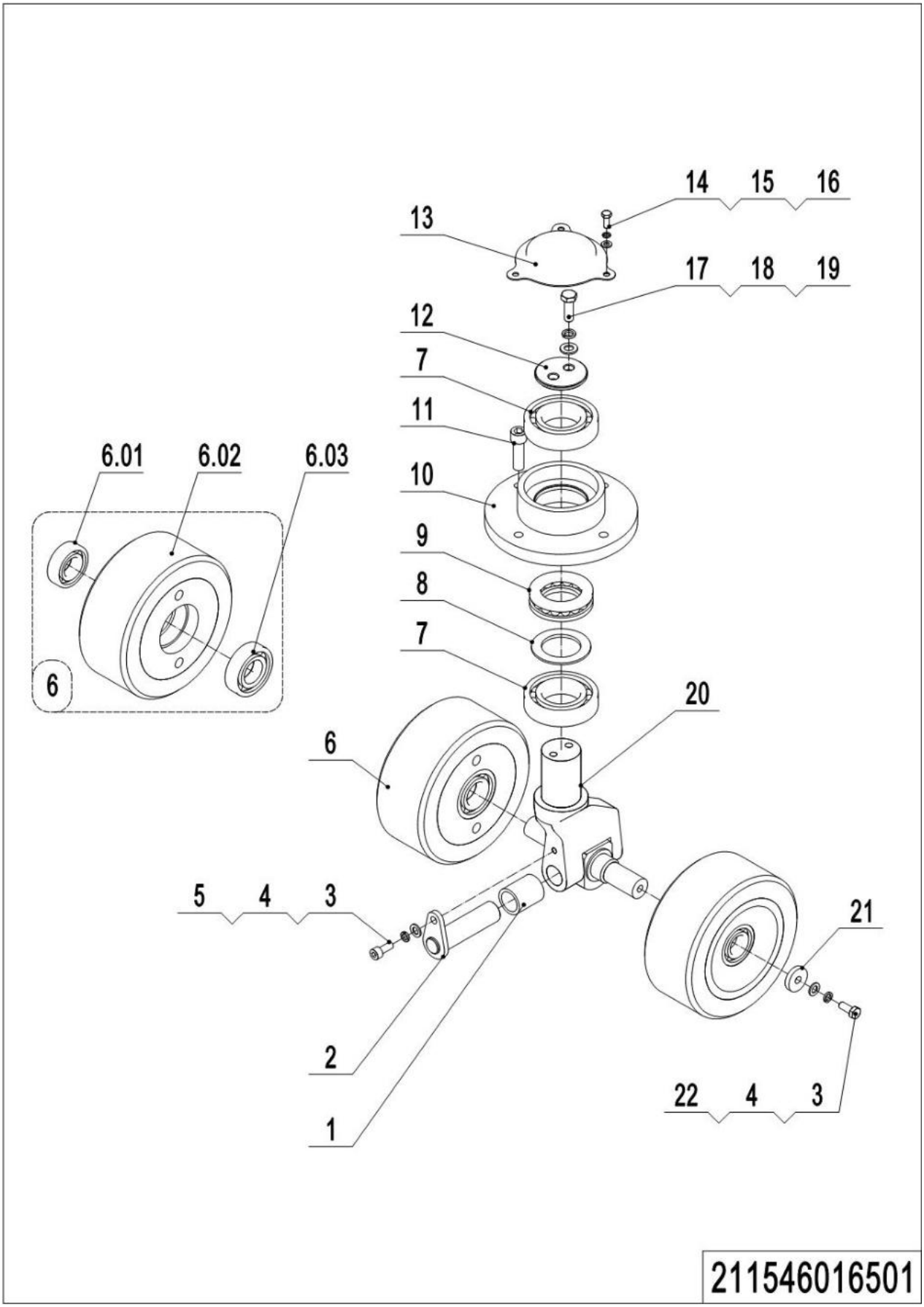

02 Side Wheel (211546016501)

No.	Item Code	Mark	Item Description	Qty.	Substitute	Note
1	940500100060		Bushing	1		
2	216516510000		Trunnion	1		
3	910200200057		Screw M8x20	1		
4	910400500006		Spring Washer 8	3		
5	910400100006		Flat Washer 8	3		
6	216598510009		Component	2		
6.01	910700200020		Bearing	1		
6.02	940300300022		Wheel Φ180x76	1		
6.03	910700200021		Bearing	1		
7	910700200024		Bearing	2		
8	216516520007		Washer	1		
9	910700700015		Bearing	1		
10	216516510001		Bearing Seat	1		
11	910200200100		Screw M12x40	4		
12	216516520002		Fixing Plate	1		
13	216517020000		Dust Cover	1		
14	910100300010		Bolt M6x16	3		
15	910400500005		Spring Washer 6	3		
16	910400100005		Flat Washer 6	3		
17	910100300035		Bolt M10x20	2		
18	910400500007		Spring Washer 10	2		
19	910400100007		Flat Washer 10	2		
20	216516520004		Shaft	1		
21	216516520000		Fixing Plate	2		
22	910100300022		Bolt M8x20	2		

03 Steering Wheel (211546013501)

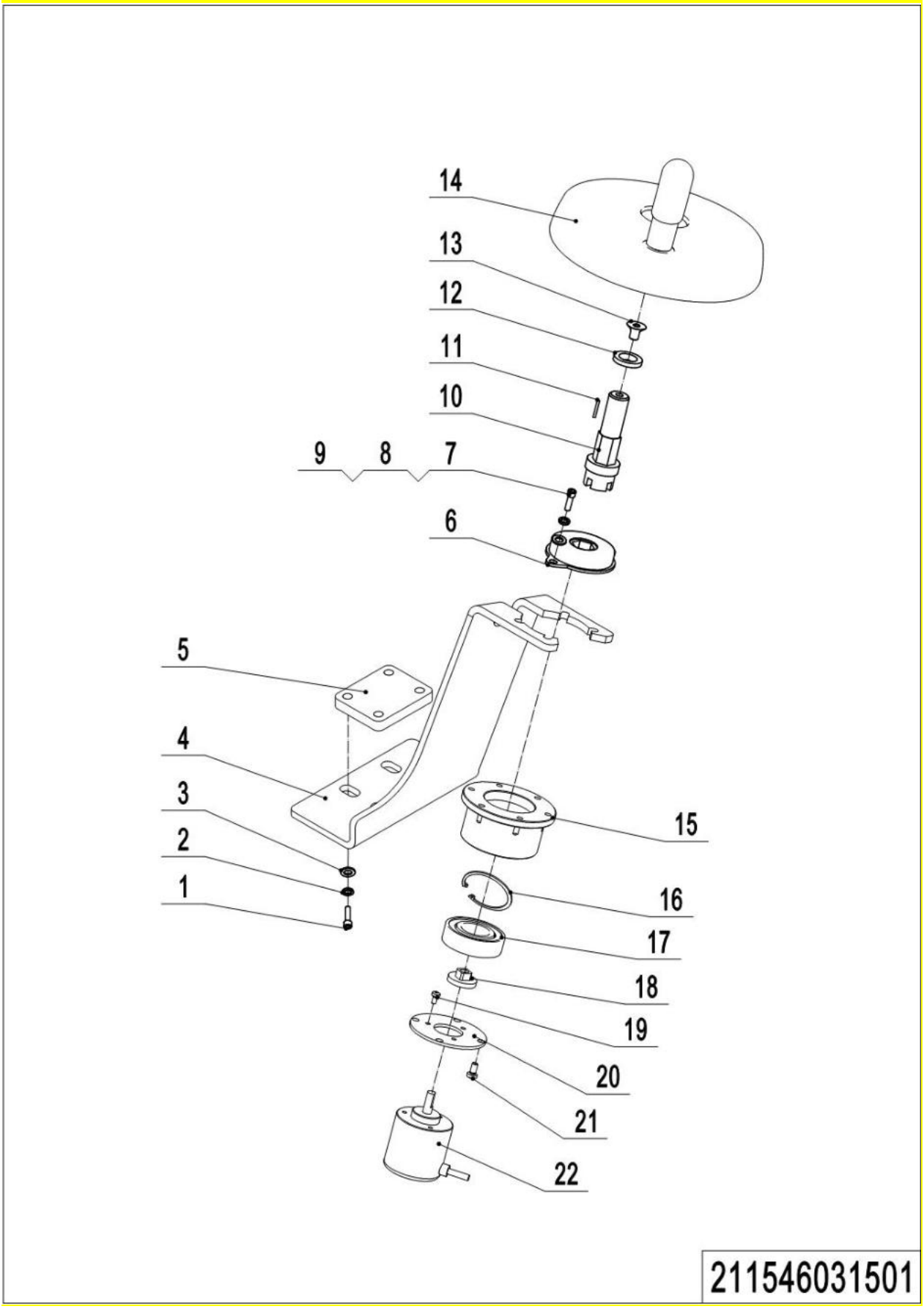

03 Steering Wheel (211546013501)

No.	Item Code	Mark	Item Description	Qty.	Substitute	Note
1	910200200057		Screw M8x20	4		
2	910400500006		Spring Washer 8	4		
3	910400100006		Flat Washer 8	4		
4	211531520001		Mounting Bracket	1		
5	211531520002		Press Plate	1		
6	271531511021		Rotation Damper	1		
7	910200500038		Screw M5x12	5		
8	910400100004		Flat Washer 5	5		
9	910400500004		Spring Washer 5	5		
10	212131520005		Axle	1		
11	910600800004		Feather Key 5x8	1		
12	212131520006		Washer	1		
13	910200400015		Screw M6x10	1		
14	940801700001		Hand Wheel	1		
15	212131520007		Bearing Seat	1		
16	910401400012		Circlip 42	1		
17	910700200004		Bearing	1		
18	505931520002		Connector	1		
19	910200500009		Screw M3x6	3		
20	212131520008		Fixing Plate	1		
21	910200500021		Screw M4x10	4		
22	921800200019		Potentiometer	1		

Chapter 6: Electrical Parts

01 Wire harness (211546033001)

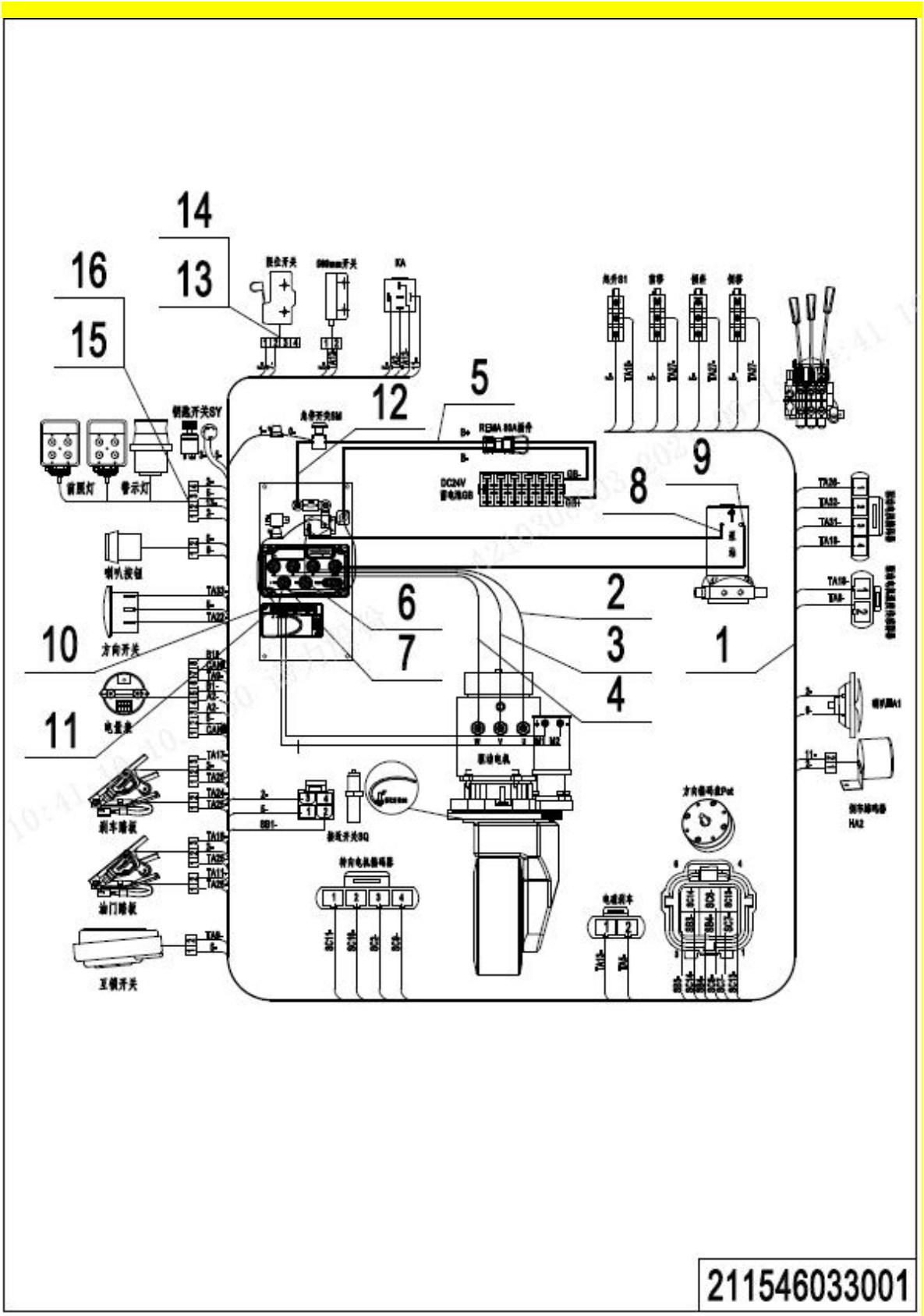

1=package supply; 2=restrict supply; 3=phasing-out supply; 4=supply as assembly; 5=check other tables.

01 Wire harness (211546033001)

No.	Item Code	Mark	Item Description	Qty.	Substitute	Note
1	211533010000		Wire harness	1		
2	211533010001		Wire harness	1		
3	211533010002		Wire harness	1		
4	211533010003		Wire harness	1		
5	211533010004		Wire harness	1		
6	211533010005		Wire harness	1		
7	211533010006		Wire harness	1		
8	211533010007		Wire harness	1		
9	211533010008		Wire harness	1		
10	211533010009		Wire harness	1		
11	211533010010		Wire harness	1		
12	211533010011		Wire harness	1		
13	211533010012		Wire harness	1		
14	211533010013		Wire harness	1		
15	211533010014		Wire harness	1		
16	211533010015		Wire harness	1		

02 Controller (211546033002)

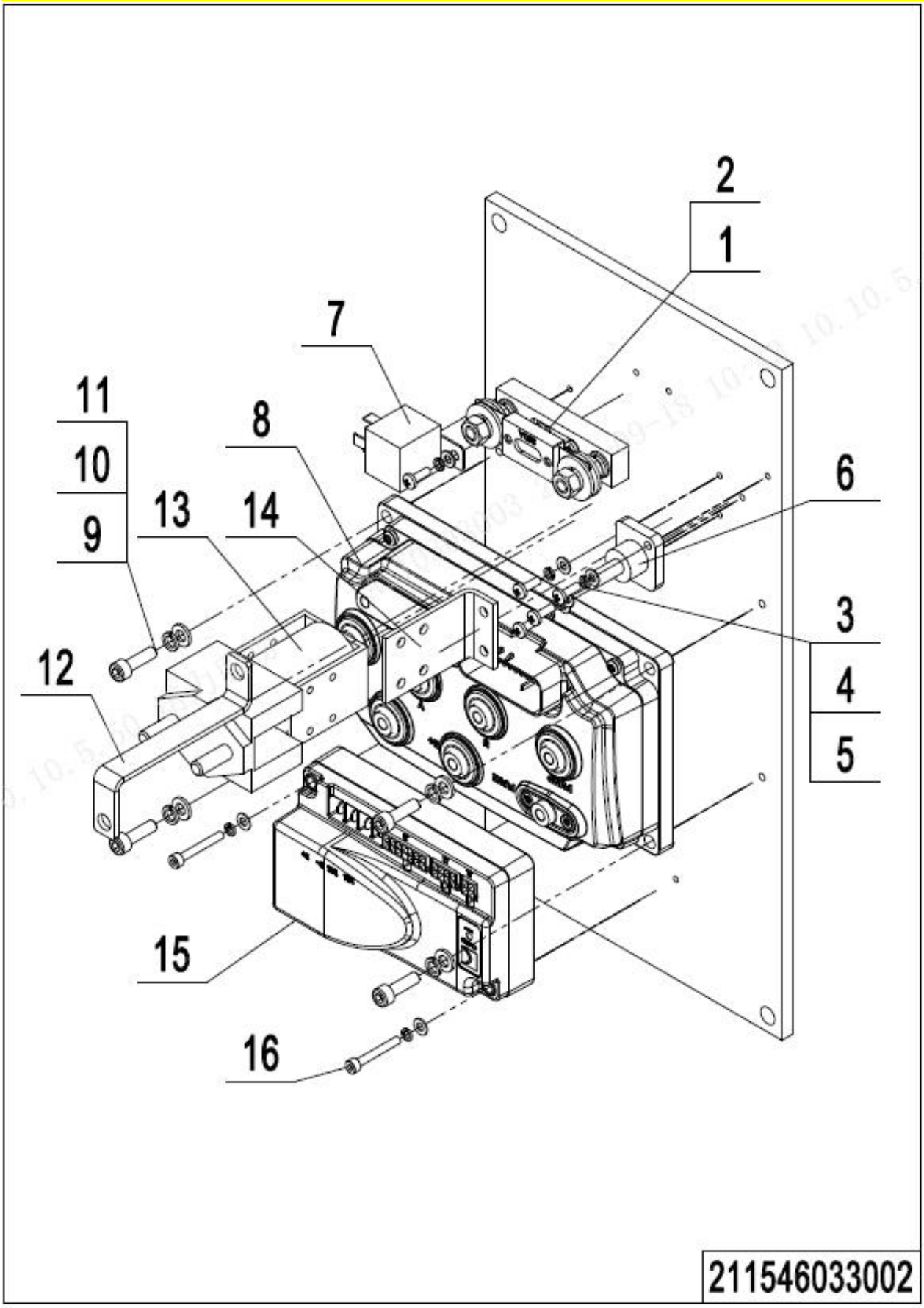

1=package supply; 2=restrict supply; 3=phasing-out supply; 4=supply as assembly; 5=check other tables.

02 Controller (211546033002)

No.	Item Code	Mark	Item Description	Qty.	Substitute	Note
1	920100400002		Fuse Holder			
2	920100100013		Fuse 350A			
3	910200500021		Screw M4x10			
4	910400100003		Flat Washer 4			
5	910400500003		Spring Washer 4			
6	920100400001		Fuse Holder			
7	920800100011		Relay			
8	921400100124		Controller			
9	910200200036		Screw M6x20			
10	910400500005		Spring Washer 6			
11	910400100005		Flat Washer 6			
12	535933020003		Copper Bus-bar			
13	920700100018		Contactor			
14	921300400004		Fixing Bracket			
15	921400100077		Controller			
16	910200200018		Screw M4x30			
17	211533020001		Mounting Plate			

03 Charger (211546036501)

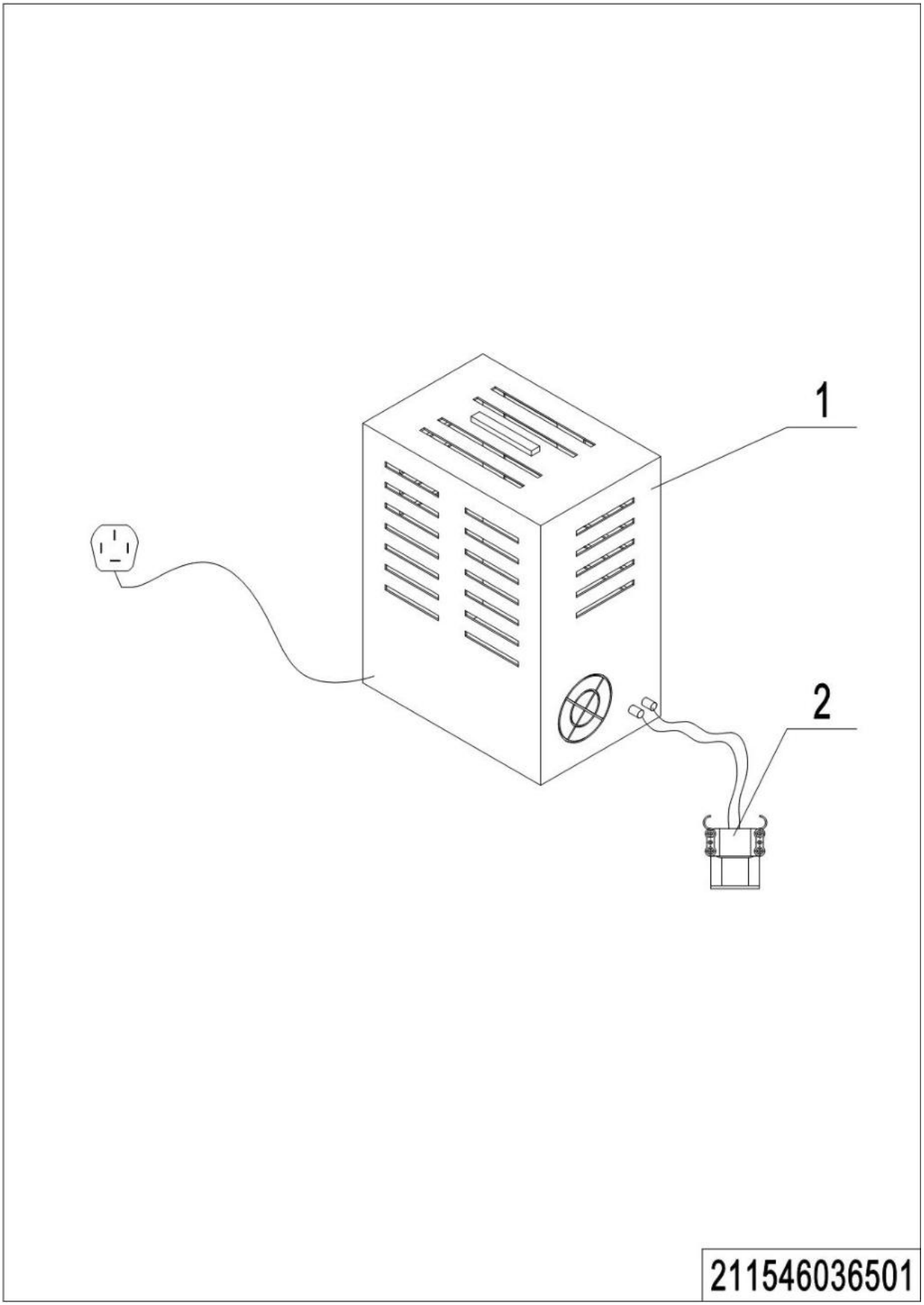

03 Charger (211546036501)

No.	Item Code	Mark	Item Description	Qty.	Substitute	Note
1	921000200025		Charger 24V55A (Asia-CHN)	1		Lead-acid Battery
1	921000200026		Charger 24V55A (Asia-ENG)	1		Lead-acid Battery
1	921000200027		Charger 24V55A (EU)	1		Lead-acid Battery
1	921000200028		Charger 24V55A (AUS)	1		Lead-acid Battery
1	921000200029		Charger 24V55A (ENG)	1		Lead-acid Battery
1	921000200030		Charger 24V55A (USA)	1		Lead-acid Battery
2	920400100001		Connector	1		Lead-acid Battery

04 Traction Battery (201546037001)

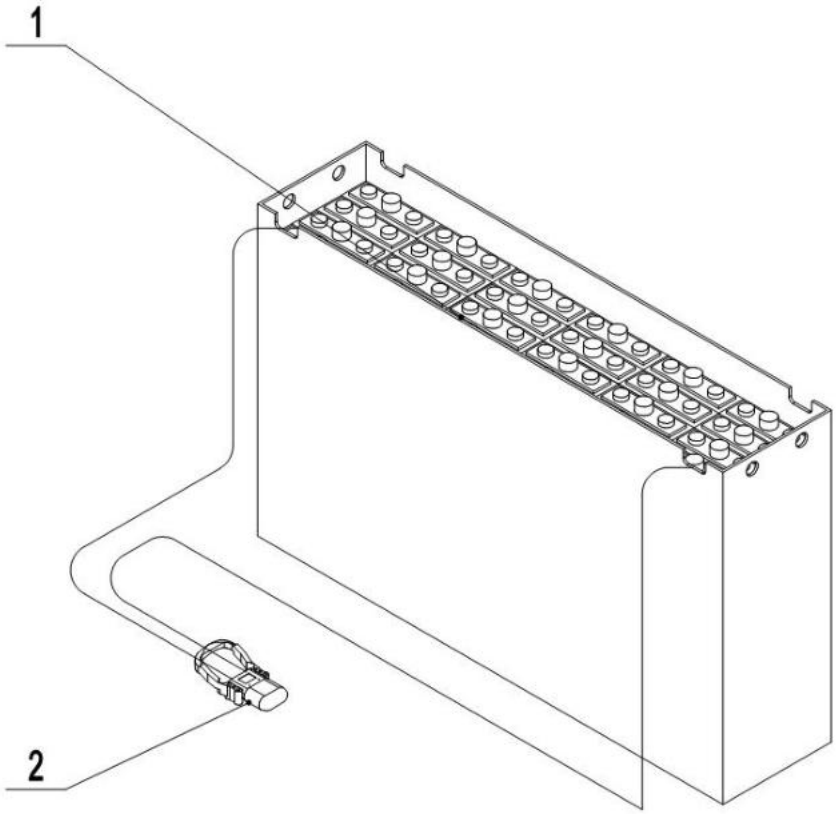

211546037001

04 Traction Battery (201546037001)

No.	Item Code	Mark	Item Description	Qty.	Substitute	Note
1	206037010001		Battery 24V400Ah	1		
1	206037010002		Battery 24V400Ah	1		
2	920400100007		Connector	1		Lead-acid Battery

Chapter 7: Special Parts

01 Load Backrest (216546040501)

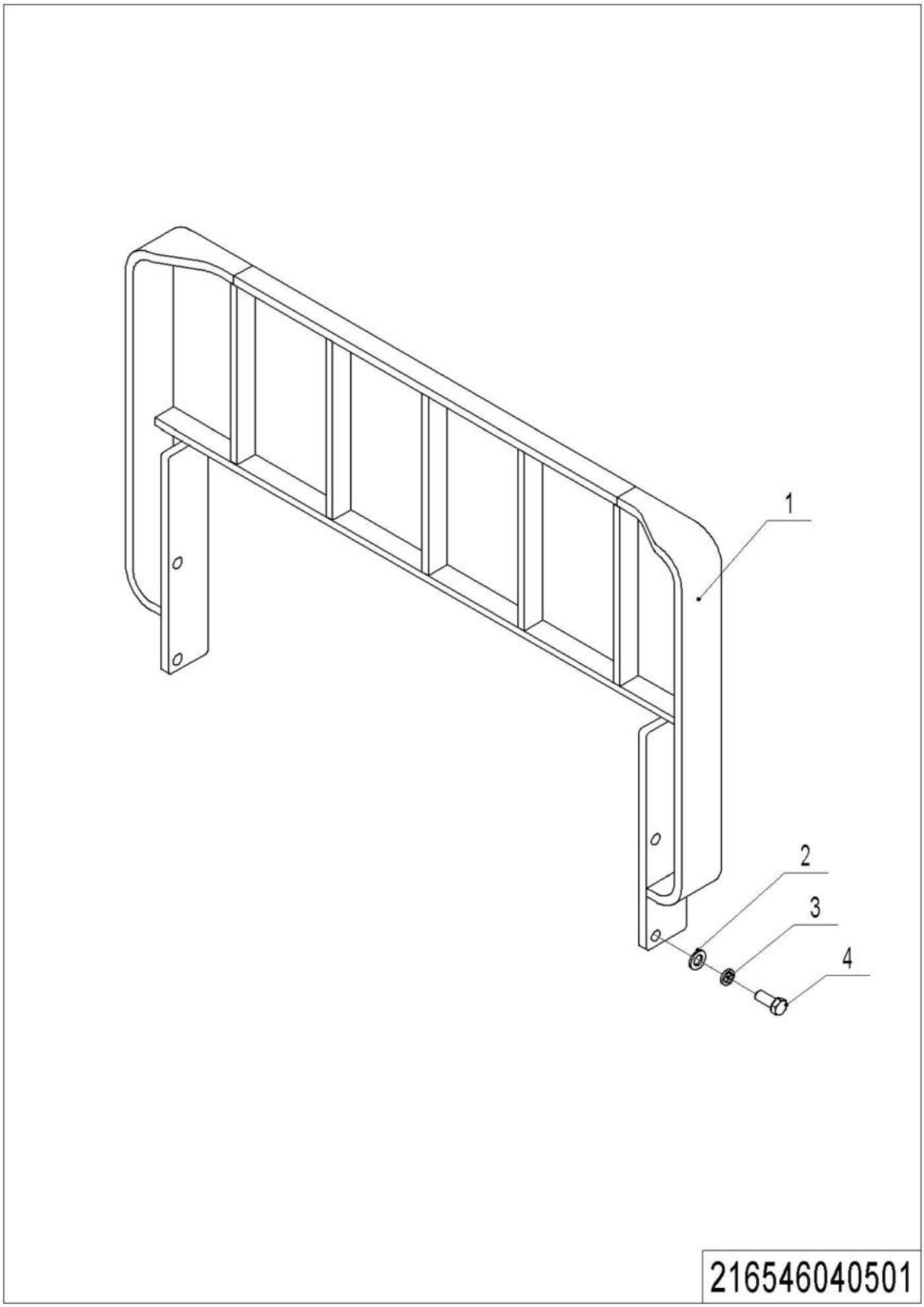

01 Load Backrest (216546040501)

No.	Item Code	Mark	Item Description	Qty.	Substitute	Note
1	216540510000		Load Backrest	1		
1	216540510001		Load Backrest	1		
2	910400100008	1	Flat Washer 12	4		
3	910400500008	1	Spring Washer 12	4		
4	910100300050	1	Bolt M12x30	4		

Chapter 8: Others

01 Labels and Decals (211546047001)

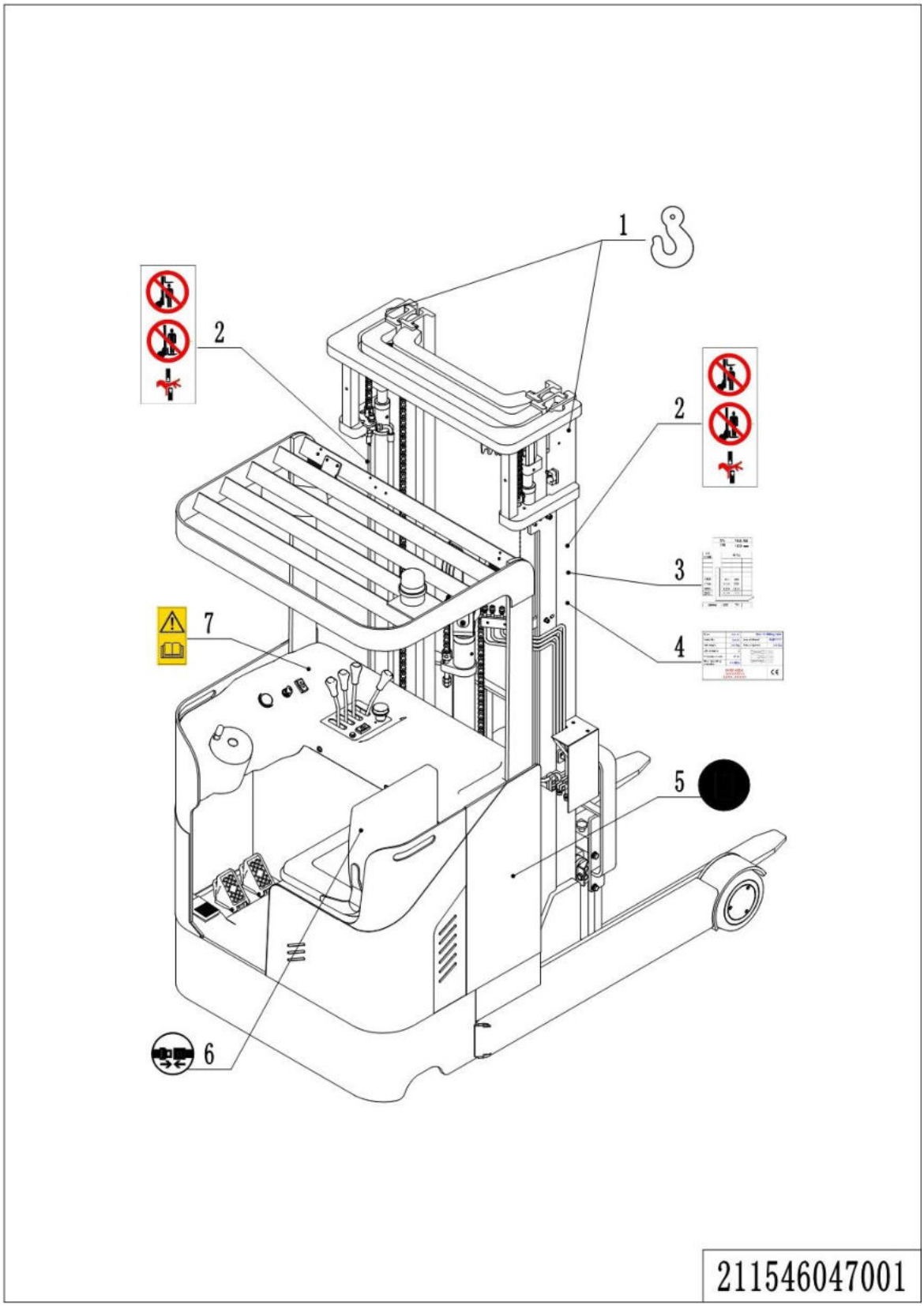

01 Labels and Decals (211546047001)

No.	Item Code	Mark	Item Description	Qty.	Substitute	Note
1	941200300001		Crane Hook Label	2		
2	941200100004		Warning Decal	2		
3	201547020000		Residual Capacity Sticker	1		
4	201547020001		Identification Plate	1		
5	941200300003		Label	1		
6	255047020012		Label	1		
7	941200300002		Label	1		

02 Control Panel (211546010001)

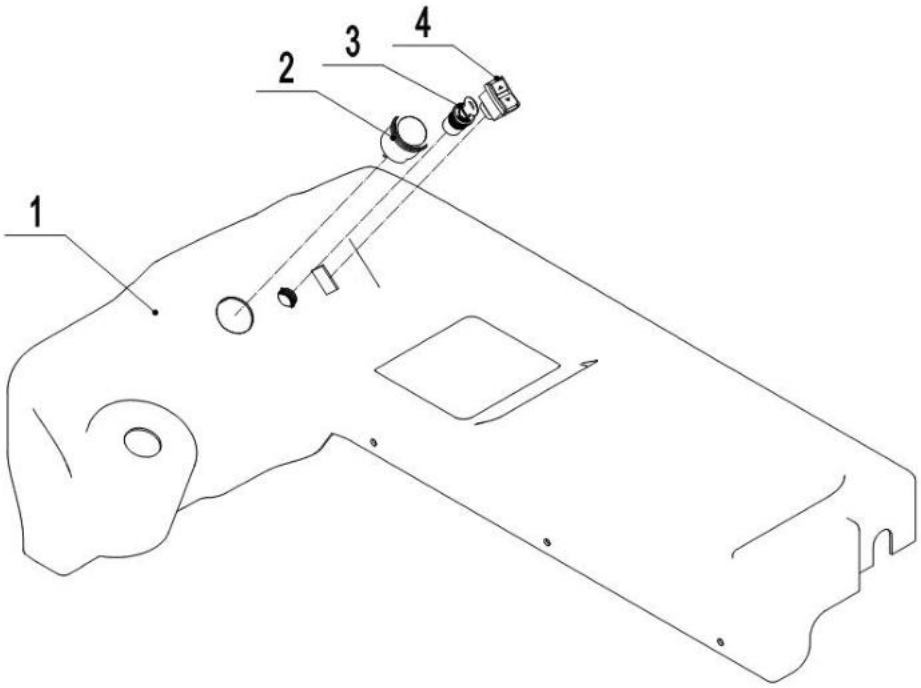

211546010001

02 Control Panel (211546010001)

No.	Item Code	Mark	Item Description	Qty.	Substitute	Note
1	211510020001		Cover	1		
2	921100100094		Display	1		
3	920200200002		Key Switch	1		
4	920200800009		Rocker Switch	1		

Appendix

01 Electrical Circuit Diagram

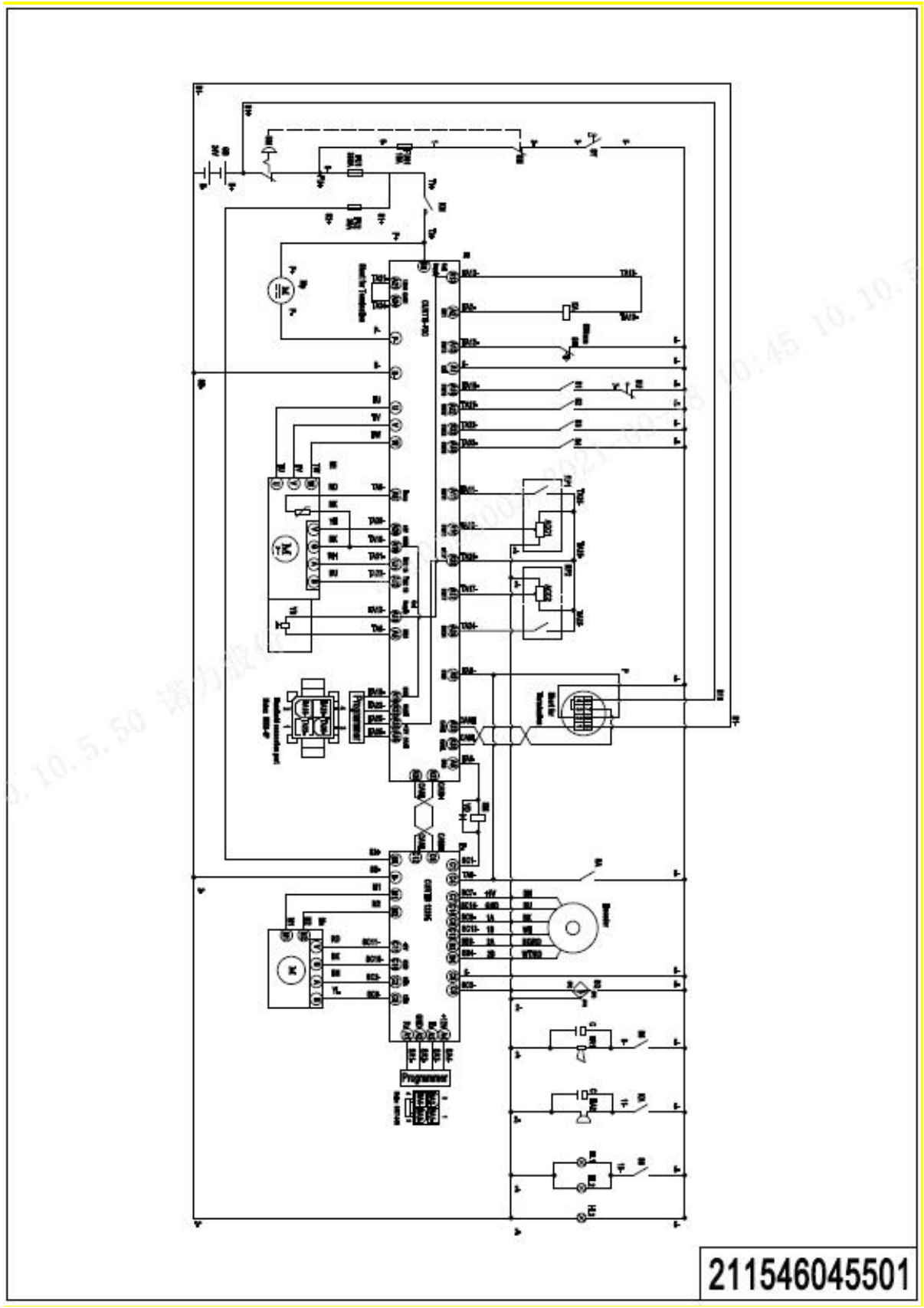

02 Hydraulic Circuit Diagram

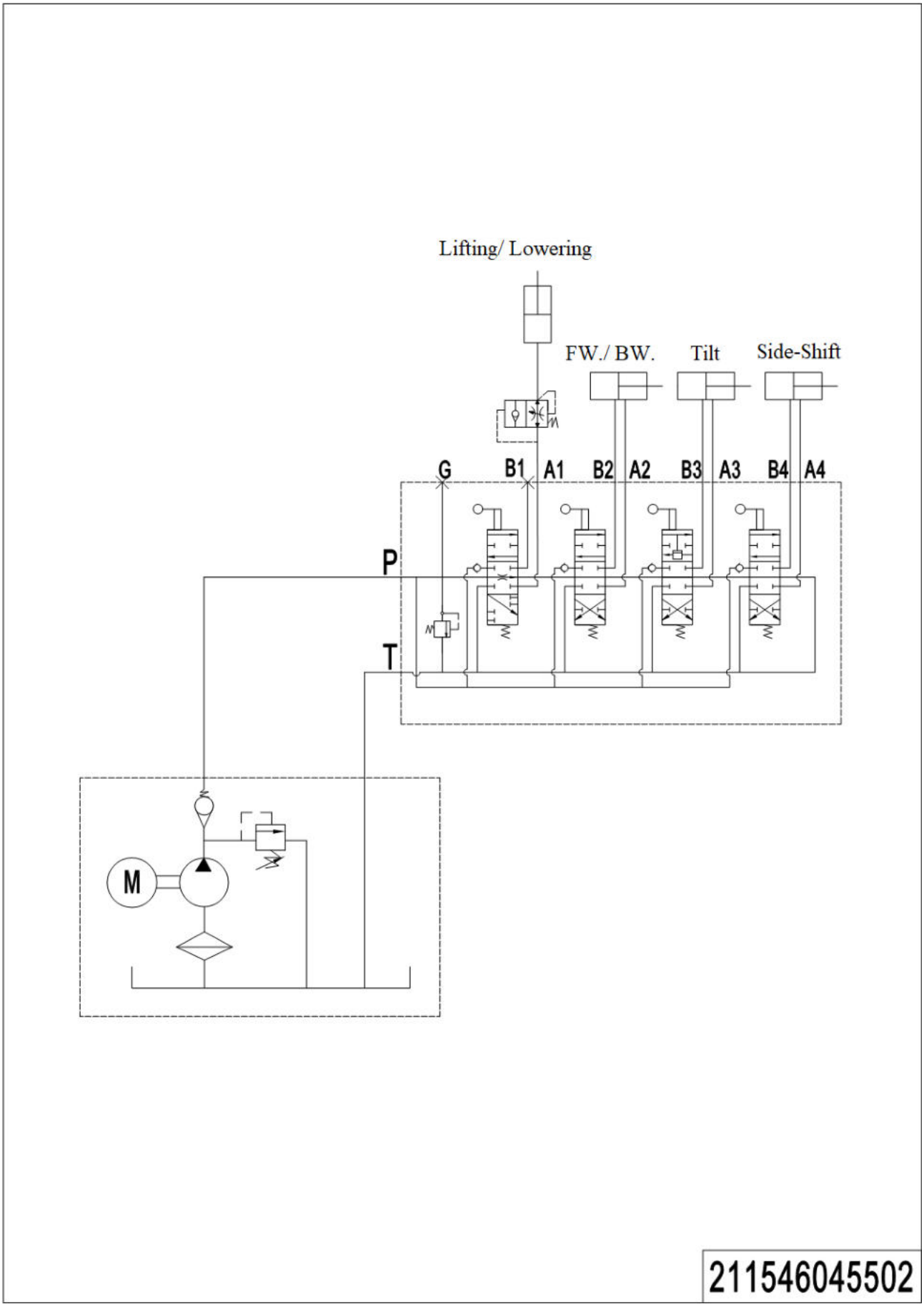

03 Easy Worn Parts List

No.	Item Code	Item Description	Qty.	Location in Chapters
1	940500400002	Self-lubricating Bearing	4	Chapter 1/01/4 Chapter 4/05/11 Chapter 406/11
2	940300400002	Tyre Φ250x82	4	Chapter 1/01/2
3	201598510001	Sealing Accessories	1	Chapter 2/01/1.01 Chapter 2/03/1.01
4	940500100007	Bushing	1	Chapter 2/02/13 Chapter 2/04/14
4	201598510004	Sealing Accessories	1	Chapter 2/05/2.01 Chapter 2/06/2.01
5	201598510004	Sealing Accessories		Chapter 2/07/16.01 Chapter 2/08/18.01
5	201598510003	Sealing Accessories	1	Chapter 2/05/4.01 Chapter 2/06/4.01
6	201598510003	Sealing Accessories		Chapter 2/07/6.01 Chapter 2/08/8.01
7	201598510002	Sealing Accessories	1	Chapter 2/07/9.01 Chapter 2/08/8.01
8	940200200007	Side Roller	4	Chapter 4/01/18.03
9	940200100006	Main Roller	4	Chapter 4/01/20
10	940200500001	Sprocket Bearing	2	Chapter 4/02/2 Chapter 4/04/2
11	910700200025	Bearing	4	Chapter 5/01/1
12	940300300025	Wheel Φ230x100	2	Chapter 5/01/2
13	940500100060	Bushing	1	Chapter 5/02/1
14	216598510009	Component	2	Chapter 5/02/6
15	910700200021	Bearing	2	Chapter 5/02/6.01
16	940300300022	Wheel Φ180x76	2	Chapter 5/02/6.02
17	910700200020	Bearing	2	Chapter 5/02/6.03
18	910700200024	Bearing	2	Chapter 5/02/7
19	910700700015	Bearing	1	Chapter 5/02/9
20	910700200004	Bearing	1	Chapter 5/03/17
21	920400100007	Connector	1	Chapter 6/04/2