Print Number:　　Print Date:

NOBLELIFT

Scan QR Code for More

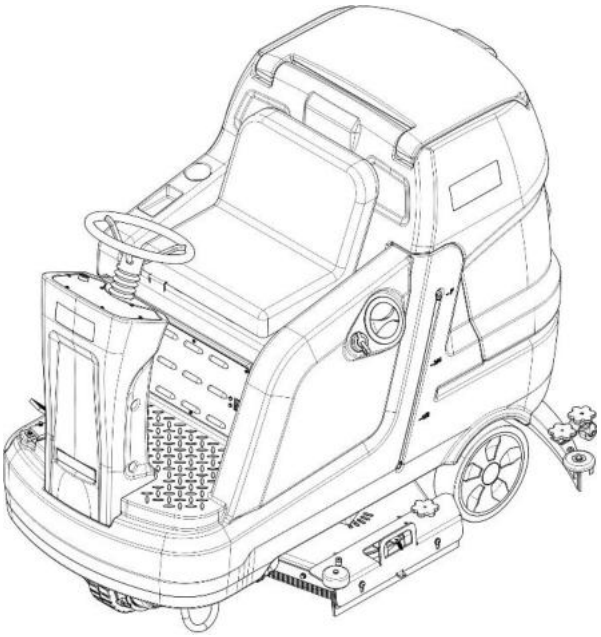

# Rider scrubber

## NR1060/860

# Parts Manual

## 590746020101

Version V03

Scrubber Identification Number From:

Parts Manual NR1060-PM03EN

Please order parts from authorized dealers of our company.
In order to avoid wrong delivery, all the orders for spare parts should specify the following items:
- Truck model, identification number and manufacture year.
- Orders for spare parts of mast, hydraulic transmission unit, steering axle, motor, etc. shall indicate the manufacture number of these parts.
- Codes for our company spare parts are shown in the table of parts manual. Please also pay attention to the description of supply status, order quantity, etc. (check the number listed in "Mark" column of the parts manual).

"Mark" Column:
The unmarked indicates the parts are in short supply cycle.
Number 1: supply as package. Indicating these that parts are small parts and seal parts, which are supplied in package unit and in short supply cycle.
Number 2: supply with constraints. Indicating that these spare parts are not in stock and will be prepared for production after receiving the order from customers, which are in long supply cycle.
Number 3: phasing-out supply. Indicating that these parts will be replaced by new parts due to technical improvements and the current stock will not be available when these parts run out. Please check the description of technical improvements notice.
Number 4: supply as assembly. Indicating that these parts are assembly parts defined by manufacture process, which cannot be supplied as a single part.
Number 5: check other tables.
This parts manual is the property of our company and can be shared under the confidential agreement only, our company has the right to claim for compensation of any unauthorized use. Copy without permission is not allowed. Figures in the manual are not limited by the original design. our company reserves the right to improve the products for continuous technology progress.

# Table of Contents

Chapter 1: Drive system ..... 1
01 Drive unit (590746013501) ..... 1
Chapter 2：Truck Frame ..... 3
01 Solution tank (590746021501) ..... 3
01 Solution tank (590746021501) Continue ..... 5
02 Recovery tank (590746021502) ..... 7
03 Frame (590746017001) ..... 9
04 Brush system (590746021503) ..... 11
04 Brush system (590746021503) continue ..... 13
05 Squeegee system (590746021504) ..... 15
06 Retaining edge (590746021505) ..... 17
07 Solution assembly (590746021506) ..... 19
08 Wiper frame (590746017002) ..... 21
09 Front body (590746021507) ..... 23
Chapter 3：Electrical parts ..... 25
01 Electronic control components (590746033001) ..... 25
02 Traction Battery (590746037001) ..... 27
03 Charger (590746036501) ..... 29
04 Wire Harness (590746033002) ..... 31
Chapter 4: Others ..... 33
01 Labels and decals (590746047001) ..... 33
02 Labels and decals (590746047002) ..... 35
Appendix ..... 37
01 Electrical Circuit Diagram (590746045501) ..... 37
02 Easy Wornout Parts List ..... 38
03 Consumable Parts List ..... 39

## Chapter 1: Drive system

## 01 Drive unit (590746013501)

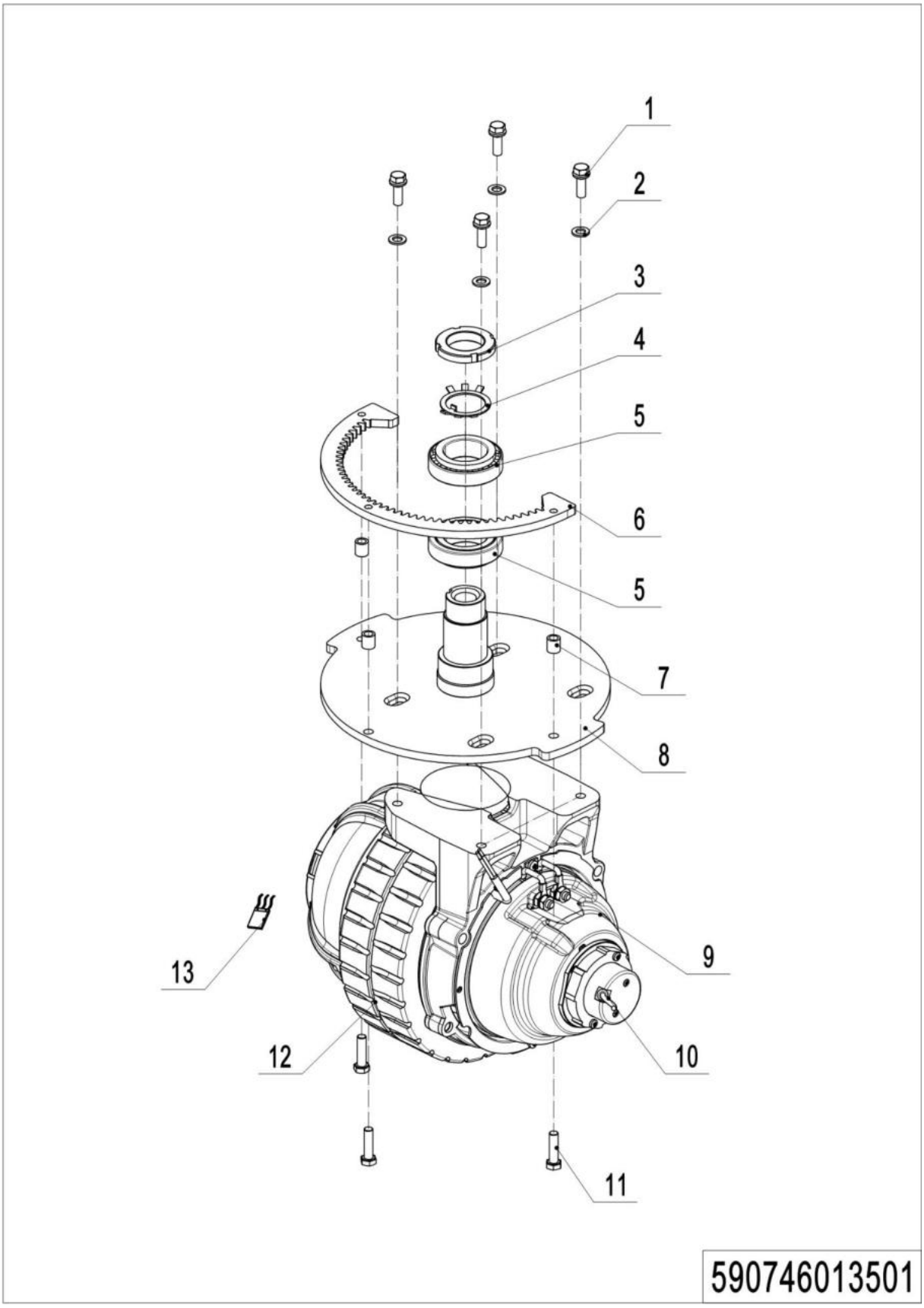


---

**1= Supply as package. 2= Supply with constraints. 3= Phasing-out supply. 4= Supply as assembly. 5= Check other tables.**

## 01 Drive unit（590746013501）

| No. | Item Code | Mark | Item Description | Qty. | Substitute | Note |
|---|---|---|---|---|---|---|
| 1 | 590198520181 | | SCREW M10x30 W WASHER | 4 | | |
| 2 | 590198520073 | | WASHER SPLIT M10 SS | 4 | | |
| 3 | 590398520065 | | NUT M36x1.5 | 1 | | |
| 4 | 590398520054 | | WASHER M36 | 1 | | |
| 5 | 590398520075 | | BEARING | 2 | | |
| 6 | 590798520029 | | GEAR RING | 1 | | |
| 7 | 590798520055 | | SPACER | 3 | | |
| 8 | 590798520022 | | SUPPORT FOR DRIVE MOTOR | 1 | | |
| 9 | 590798510000 | | DRIVE MOTOR | 1 | | |
| 10 | 590798520136 | | BRAKE | 1 | | |
| 11 | 590198520145 | | SCREW HEX HD M8x30 | 3 | | |
| 12 | 590798520134 | | WHEEL RING 250 | 1 | | |
| 13 | 590798520131 | | CARBON BRUSH | 1 | | |

## Chapter 2： Truck Frame

## 01 Solution tank (590746021501)

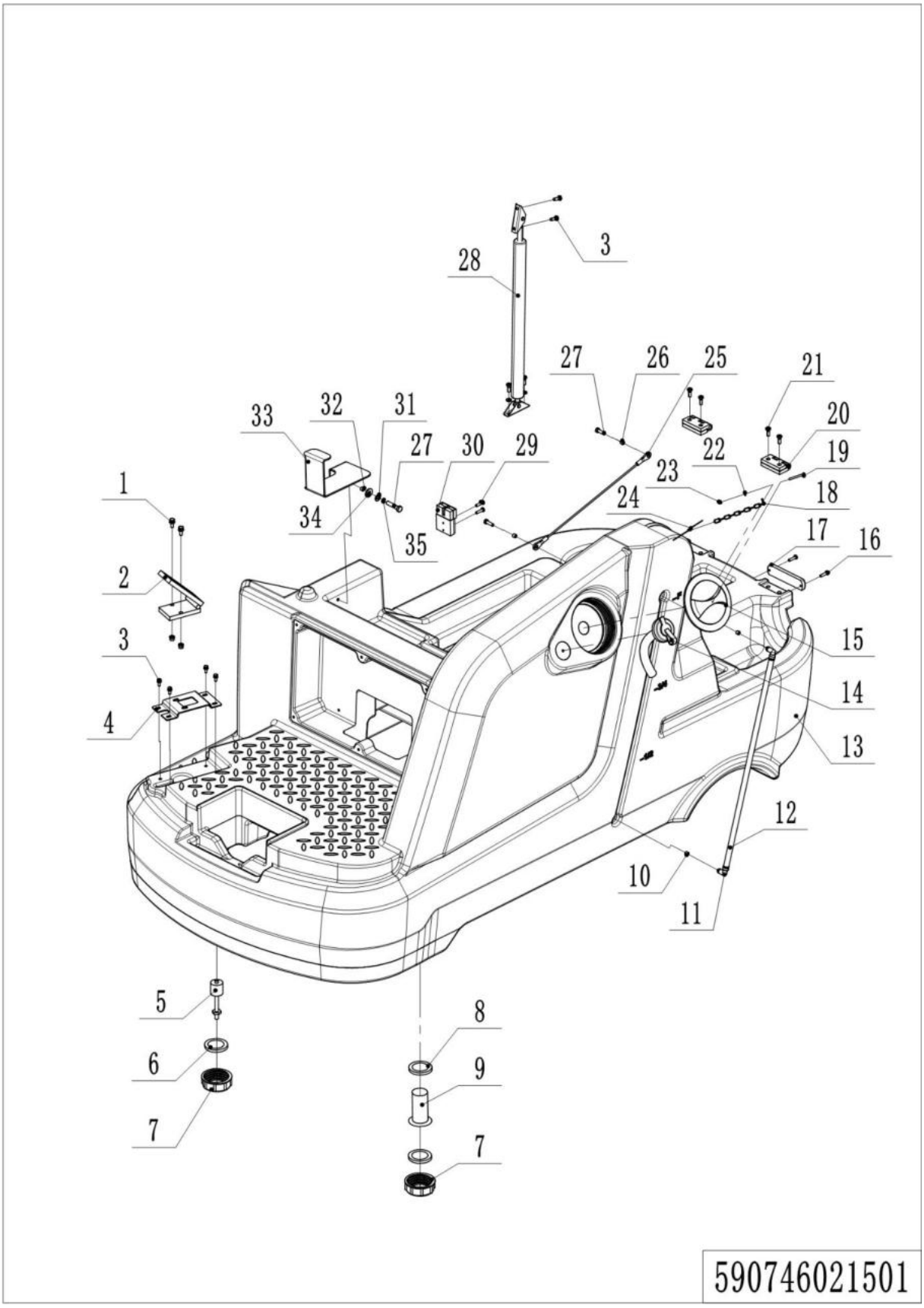

## 01 Solution tank（590746021501）

| No. | Item Code | Mark | Item Description | Qty. | Substitute | Note |
|---|---|---|---|---|---|---|
| 1 | 590198520104 | | SCREW SOCKET HD M8×16 | 2 | | |
| 2 | 590798510004 | | ACCELERATOR | 1 | | |
| 3 | 590198520142 | | SCREW M6x16 W WASHER | 8 | | |
| 4 | 590798520026 | | FIXED PLATE | 1 | | |
| 5 | 590798510009 | | CLEAN WATER TANK SENSOR | 1 | | |
| 6 | 590798520126 | | RUBBER INSERT 42x46x2 | 2 | | |
| 7 | 590798520008 | | COVER | 2 | | |
| 8 | 590798520127 | | RUBBER INSERT 42x56x3 | 1 | | |
| 9 | 590798520004 | | FILTER | 1 | | |
| 10 | 590198520136 | | RUBBER PLUG | 2 | | |
| 11 | 590198520128 | | L CONNECTOR 8 | 2 | | |
| 12 | 590198520139 | | HOSE 8 | 0.6m | | |
| 13 | 590798520009 | | SOLUTION TANK | 1 | | |
| 14 | 590498520053 | | HOSE FOR WATER INJECTION | 1 | | |
| 15 | 590798520007 | | COVER | 1 | | |
| 16 | 590198520092 | | SCREW CYL HD M4x10 | 2 | | |
| 17 | 590398510010 | | ALARM LIGHT | 1 | | |
| 18 | 590398520095 | | CHAIN | 1 | | |
| 19 | 590198520101 | | SCREW PAN HD M3×25 | 1 | | |
| 20 | 590798520052 | | HINGE | 2 | | |
| 21 | 590198520104 | | SCREW SOCKET HD M8×16 | 8 | | |
| 22 | 590198520190 | | WASHER FLAT D3xD9 | 1 | | |
| 23 | 590198520102 | | NUT HEX SELF LOCKING M3 | 1 | | |
| 24 | 590798520124 | | YORSION SPRING | 1 | | |
| 25 | 590798520057 | | CABLE | 1 | | |
| 26 | 590398520074 | | SPACER | 2 | | |
| 27 | 590198520083 | | SCREW SOCKET HD M6x16 | 2 | | |
| 28 | 590798520051 | | GAS SPRING | 1 | | |
| 29 | 590498520082 | | SCREW CYL HD M5x30 | 2 | | |
| 30 | 590798510020 | | MAIN POWER CORD | 1 | | |

## 01 Solution tank (590746021501) Continue

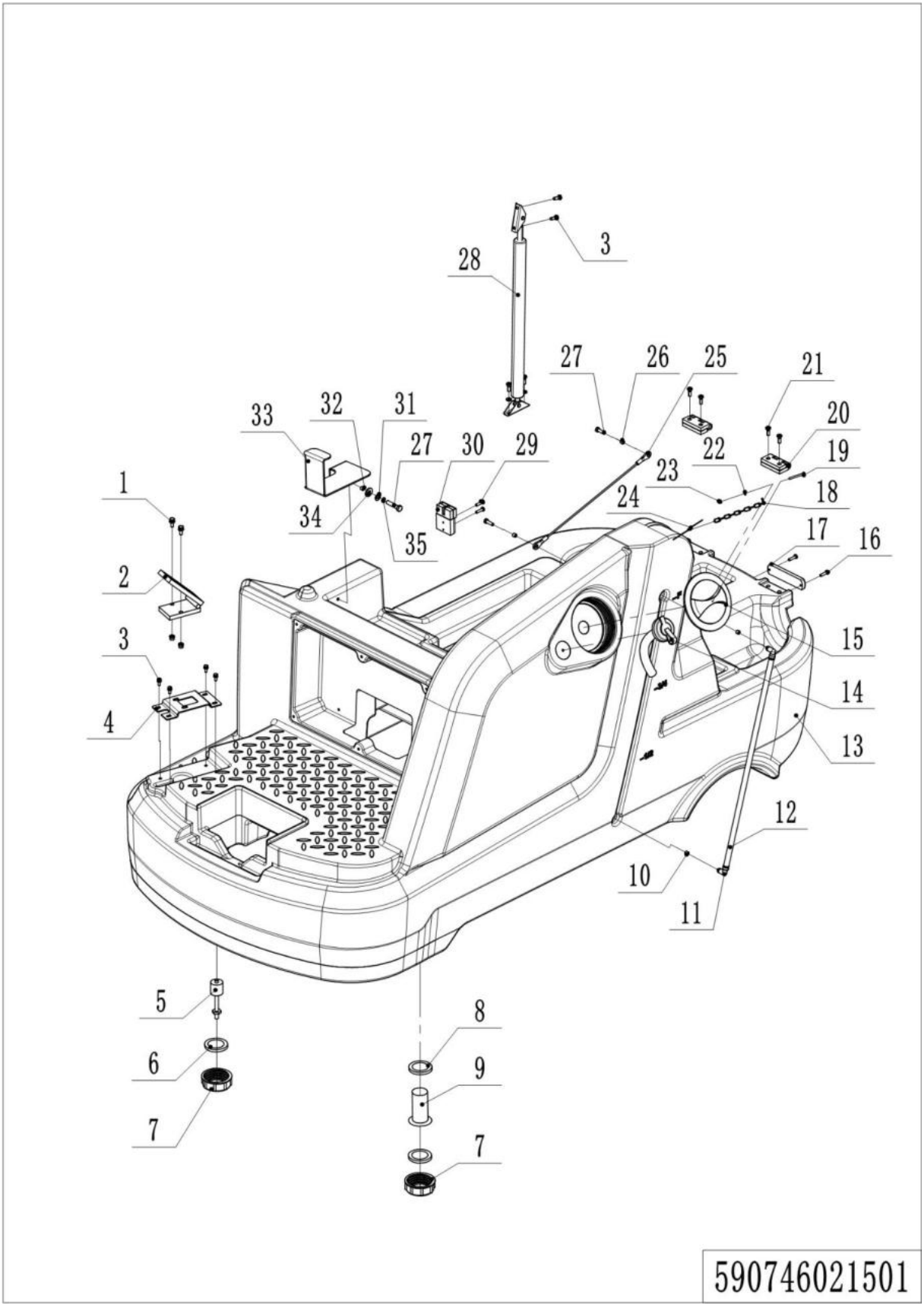

## 01 Solution tank (590746021501) Continue

| No. | Item Code | Mark | Item Description | Qty. | Substitute | Note |
|---|---|---|---|---|---|---|
| 31 | 590198520079 | | WASHER FLAT D6xD18 | 1 | | |
| 32 | 590198520038 | | SPACER D6.5×D10×5 | 1 | | |
| 33 | 590798520030 | | SUPPORT FRAME | 1 | | |
| 34 | 590198520081 | | WAHSER FLAT D10xD20x2.5 | 1 | | |
| 35 | 590198520075 | | WASHER SPLIT M6 SS | 1 | | |

## 02 Recovery tank (590746021502)

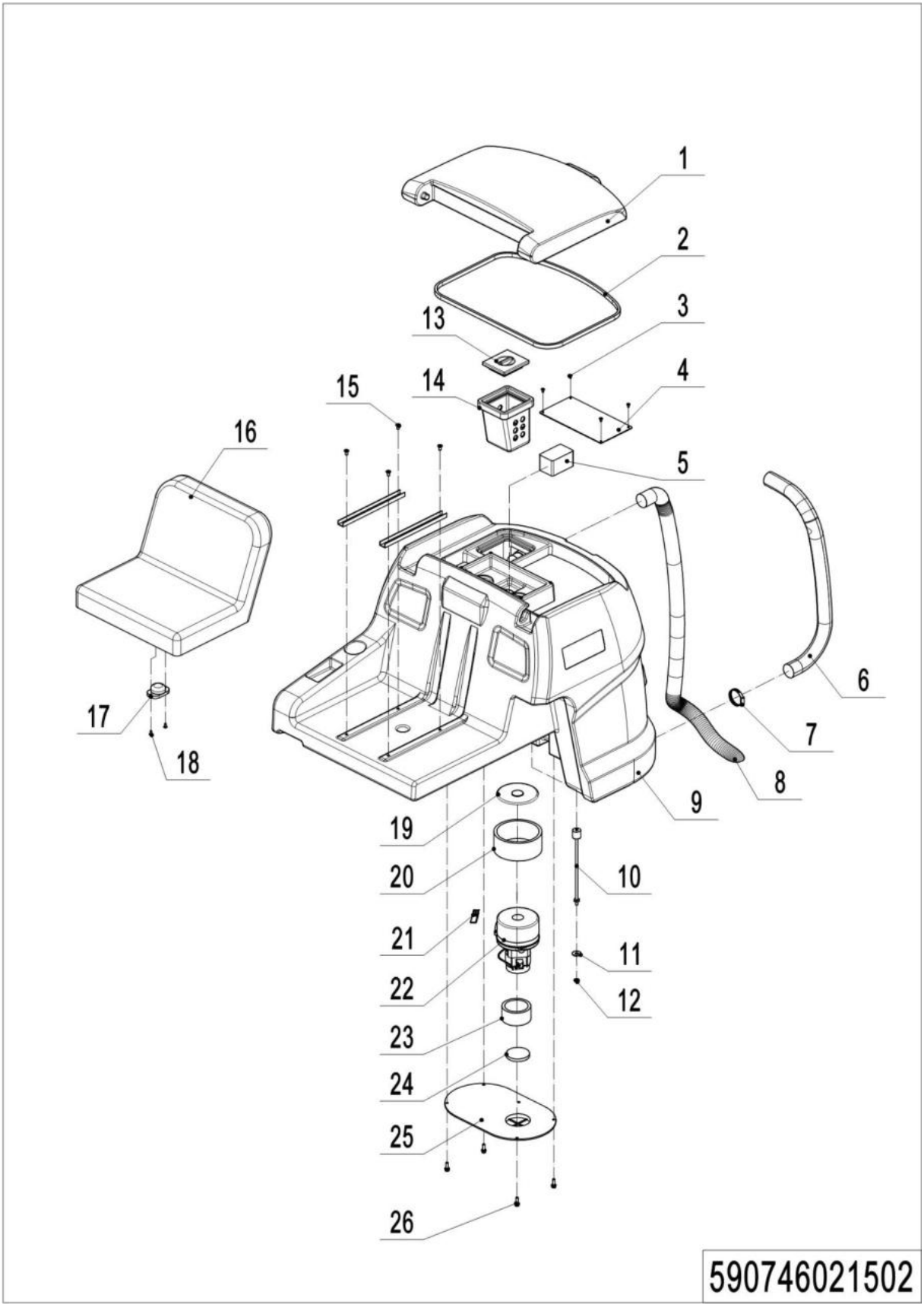

## 02 Recovery tank（590746021502）

| No. | Item Code | Mark | Item Description | Qty. | Substitute | Note |
|---|---|---|---|---|---|---|
| 1 | 590798520012 | | RECOVERY TANK COVER | 1 | | |
| 2 | 590198520061 | | GASKET | 1.9m | | |
| 3 | 590398520090 | | SELF TAPPING SCREW | 6 | | |
| 4 | 590798520033 | | BAFFLE | 1 | | |
| 5 | 590798520037 | | FILTER COTTON | 1 | | |
| 6 | 590798520041 | | DRAIN HOSE | 1 | | |
| 7 | 590798520053 | | HOSE CLAMP D46-70 | 1 | | |
| 8 | 590798520042 | | DIRT SUCTION PIPE | 1 | | |
| 9 | 590798520010 | | RECOVERY TANK | 1 | | |
| 10 | 590798510008 | | SEWAGE TANK SENSOR | 1 | | |
| 11 | 590198520080 | | WASHER FLAT D10xD30x2.5 | 2 | | |
| 12 | 590798520059 | | NUT M10 | 1 | | |
| 13 | 590798520006 | | BOX COVER | 1 | | |
| 14 | 590798520005 | | GARBAGE FILTER BOX | 1 | | |
| 15 | 590198520104 | | SCREW SOCKET HD M8×16 | 4 | | |
| 16 | 590798520038 | | CHAIR | 1 | | |
| 17 | 590798510012 | | SEAT SWITCH | 1 | | |
| 18 | 590798520085 | | SELF TAPPING SCREW | 2 | | |
| 19 | 590198520054 | | GASKET | 1 | | |
| 20 | 590198520056 | | ACOUSTIC INSULATION PIPE | 1 | | |
| 21 | 590798520132 | | CARBON BRUSH | 1 | | |
| 22 | 590798510003 | | VACUUM MOTOR | 1 | | |
| 23 | 590198520057 | | GASKET | 1 | | |
| 24 | 590198520058 | | FILTER FOAM | 1 | | |
| 25 | 590798520028 | | FIXED PLATE | 1 | | |
| 26 | 590198520142 | | SCREW M6x16 W WASHER | 6 | | |

## 03 Frame (590746017001)

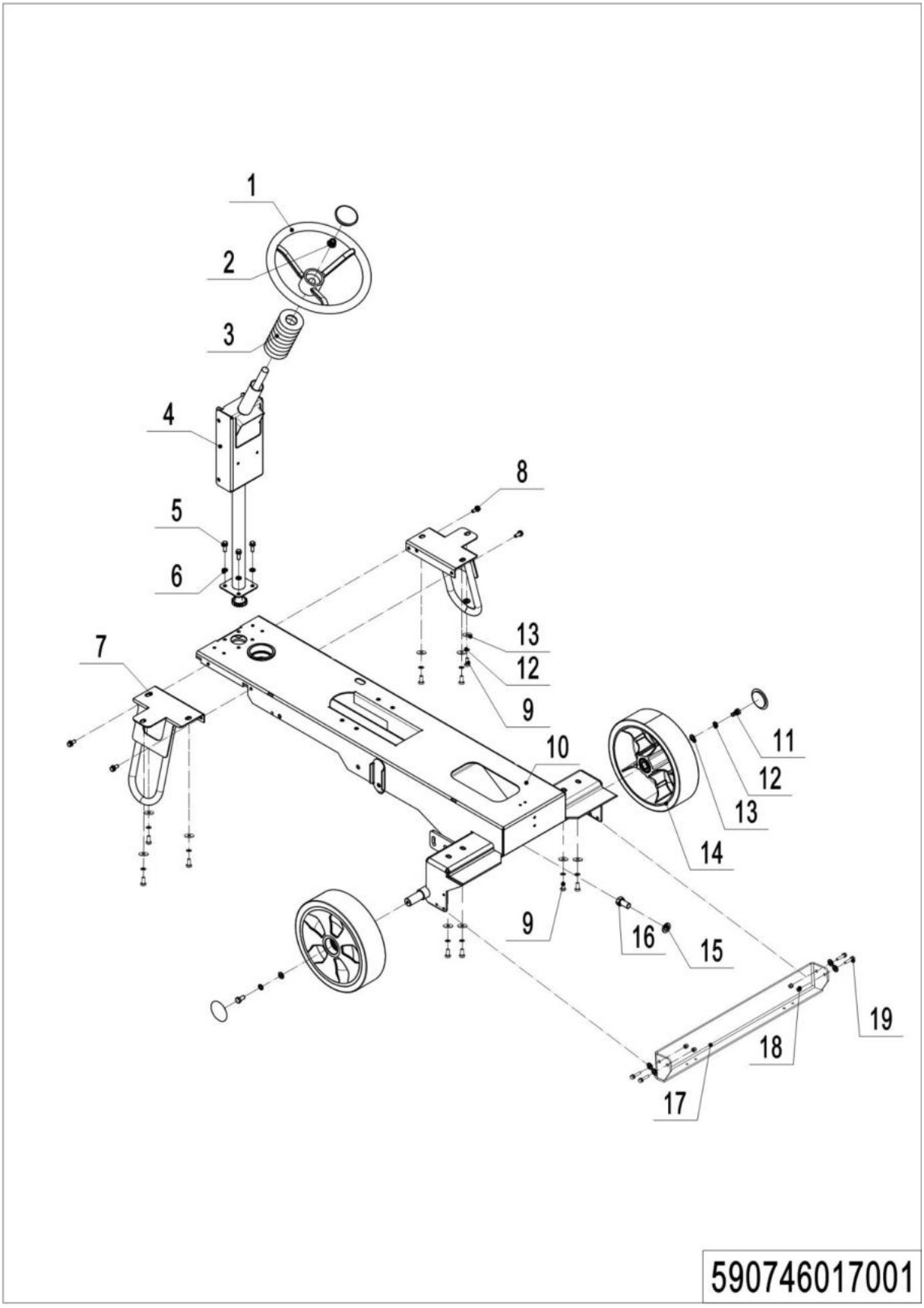

## 03 Frame（590746017001）

| No. | Item Code | Mark | Item Description | Qty. | Substitute | Note |
|---|---|---|---|---|---|---|
| 1 | 590798520039 | | STEERING WHEEL COVER | 1 | | |
| 2 | 590798520058 | | NUT M16 | 1 | | |
| 3 | 590798520040 | | RUBBER | 1 | | |
| 4 | 590798520036 | | STEERING MECHANISM | 1 | | |
| 5 | 590398520049 | | SCREW M8×25 W WASHER | 4 | | |
| 6 | 590198520081 | | WAHSER FLAT | 4 | | |
| 7 | 590798520031 | | BRACKET | 1 | | |
| 8 | 590198520069 | | SCREW M8x20 W WASHER | 4 | | |
| 9 | 590198520086 | | SCREW HEX HD M10×20 | 10 | | |
| 10 | 590798520016 | | FRAME | 1 | | |
| 11 | 590198520126 | | SCREW HEX HD M10×25 | 2 | | |
| 12 | 590198520073 | | WASHER SPLIT M10 SS | 12 | | |
| 13 | 590198520080 | | WASHER FLAT | 12 | | |
| 14 | 590798520014 | | REAR WHEEL | 2 | | |
| 15 | 590398520086 | | WAHSER SPLIT M16 | 1 | | |
| 16 | 590398520058 | | SCREW HEX HD M16x25 | 1 | | |
| 17 | 590798520125 | | STERN FRAME | 1 | | |
| 18 | 590198520067 | | NUT HEX SELF LOCKING | 4 | | |
| 19 | 590398520048 | | SCREW M6x20 W WASHER | 4 | | |

## 04 Brush system (590746021503)

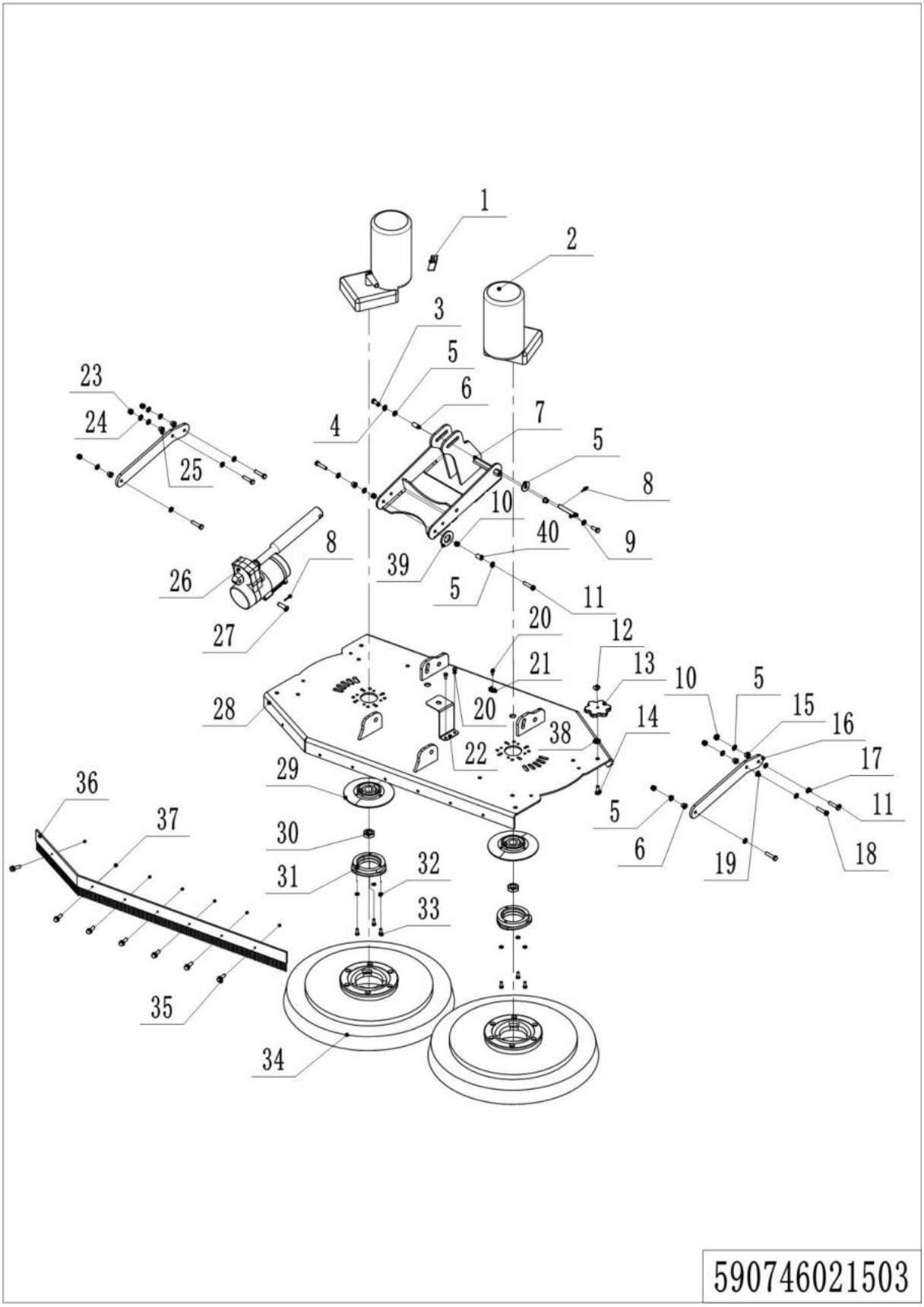

## 04 Brush system（590746021503）

| No. | Item Code | Mark | Item Description | Qty. | Substitute | Note |
|---|---|---|---|---|---|---|
| 1 | 590798520135 | | CARBON BRUSH | 2 | | |
| 2 | 590798510005 | | REDUCTION GEARMOTOR | 2 | | |
| 3 | 590198520181 | | SCREW M10x30 W WASHER | 2 | | |
| 4 | 590198520073 | | WASHER SPLIT M10 SS | 2 | | |
| 5 | 590198520080 | | WASHER FLAT D10xD30x2.5 | 3 | | |
| 6 | 590798520118 | | SPACER D10xD16x10 | 2 | | |
| 7 | 590798520025 | | LIFT HOLDER | 1 | | |
| 8 | 590198520180 | | SPLIT PIN 3 | 2 | | |
| 9 | 590798520045 | | SHAFT 10x65 | 1 | | |
| 10 | 590198520065 | | NUT HEX SELF LOCKING M10 | 6 | | |
| 11 | 590798520120 | | SHOULDER SCREW 12x20 | 6 | | |
| 12 | 590798520123 | | WATERPROOF COVER | 2 | | |
| 13 | 590198520132 | | HANDLE | 2 | | |
| 14 | 590198520150 | | SCREW HEX HD M8x35 | 2 | | |
| 15 | 590198520017 | | SPACER | 6 | | |
| 16 | 590798520024 | | CONNNECTION ROD | 2 | | |
| 17 | 590398520085 | | WASHER FLAT D12xD24x2.5 | 4 | | |
| 18 | 590198520145 | | SCREW HEX HD M8x30 | 2 | | |
| 19 | 590198520028 | | WASHER D12×24×2 | 6 | | |
| 20 | 590198520091 | | SCREW CYL HD M5x12 | 4 | | |
| 21 | 590198520095 | | FLAT TIE HOLDER | 2 | | |
| 22 | 590498520031 | | HOLDER FOR SOLENOID | 1 | | |
| 23 | 590198520066 | | NUT HEX SELF LOCKING M8 | 2 | | |
| 24 | 590198520109 | | WASHER D8×D24×2 | 2 | | |
| 25 | 590798520121 | | SPACER D8xD12x10 | 2 | | |
| 26 | 590798510001 | | FRONT PUSH MOTOR | 1 | | |
| 27 | 590798520046 | | SHAFT 10x55 | 1 | | |
| 28 | 590798520015 | | BRUSH DISC COVER | 1 | | Use in NR1060 |
| 28 | 590798520078 | | BRUSH DISC COVER | 1 | | Use in NR860P |
| 29 | 590198520045 | | COUPLING JK | 2 | | |

## 04 Brush system (590746021503) continue

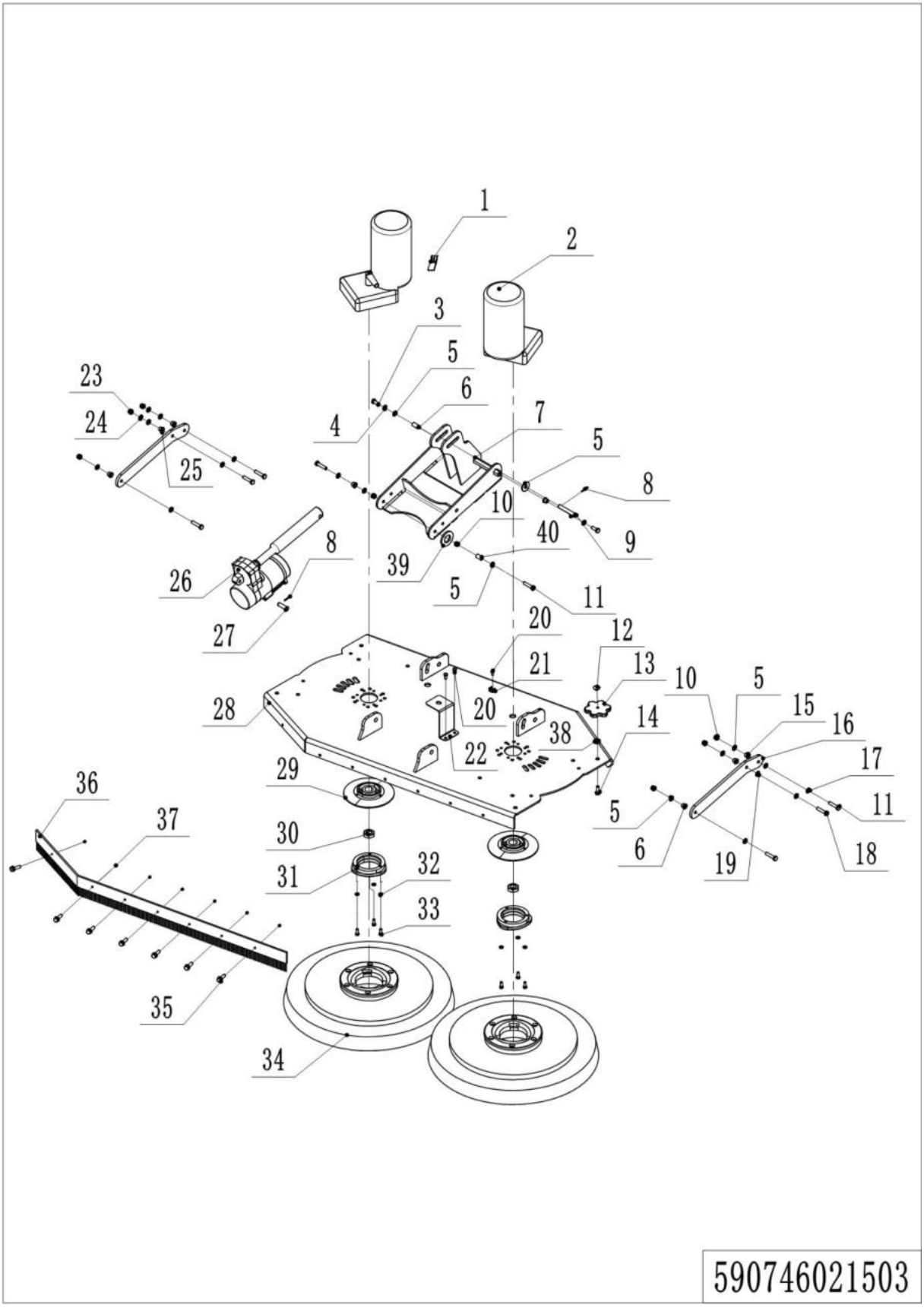

## 04 Brush system（590746021503）continue

| No. | Item Code | Mark | Item Description | Qty. | Substitute | Note |
|---|---|---|---|---|---|---|
| 30 | 590398520064 | | NUT M20x1.5 | 2 | | |
| 31 | 590198520010 | | BRUSH HOLDER | 2 | | |
| 32 | 590198520075 | | WASHER SPLIT M6 SS | 3 | | |
| 33 | 590198520087 | | SCREW SOCKET HD M6x20 | 3 | | |
| 33 | 590398520092 | | BRUSH | 2 | | Use in NR1060 |
| 33 | 590398520093 | | MAGNETIC PAD | 2 | | Use in NR1060 |
| 33 | 590798520110 | | BRUSH(SOFT) | 2 | | NR1060 PTIONAL |
| 34 | 590798520111 | | BRUSH(HARD) | 2 | | NR1060 PTIONAL |
| 34 | 590798520074 | | BRUSH | 2 | | Use in NR860 |
| 34 | 590798520075 | | MAGNETIC PAD | 2 | | Use in NR860P |
| 34 | 590798520112 | | BRUSH(SOFT) | 2 | | NR860P OPTIONAL |
| 34 | 590798520113 | | BRUSH(HARD) | 2 | | NR860P OPTIONAL |
| 35 | 590198520142 | | SCREW M6x16 W WASHER | 7 | | |
| 36 | 590798520002 | | BRUSH STRIP | 1 | | Use in NR1060 |
| 36 | 590798520077 | | BRUSH STRIP | 1 | | Use in NR860P |
| 37 | 590198520067 | | NUT HEX SELF LOCKING M6 | 7 | | |
| 38 | 590398520098 | | NUT M8 | 1 | | |
| 39 | 590798520128 | | SPACER D12xD16x10 | 2 | | |
| 40 | 590398520053 | | WASHER FLAT Ø16 | 2 | | |

## 05 Squeegee system (590746021504)

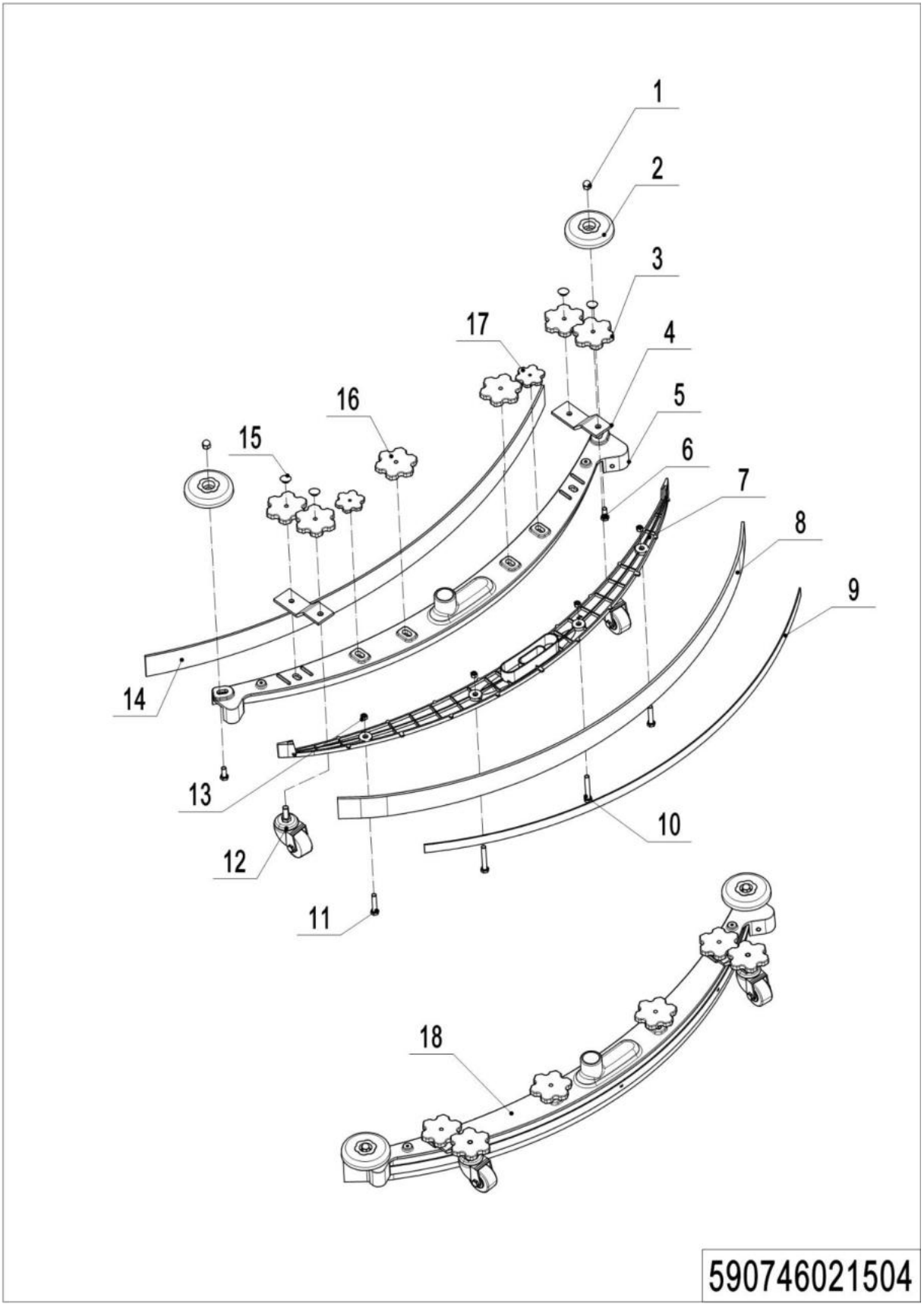


---

**1= Supply as package. 2= Supply with constraints. 3= Phasing-out supply. 4= Supply as assembly. 5= Check other tables.**

## 05 Squeegee system（590746021504）

| No. | Item Code | Mark | Item Description | Qty. | Substitute | Note |
|---|---|---|---|---|---|---|
| 1 | 590398520062 | | BLIND NUT M8 | 2 | | |
| 2 | 590798520060 | | BUMPER ROLLER | 2 | | |
| 3 | 590798520061 | | HANDLE | 2 | | |
| 4 | 590798520062 | | REAR WHEEL BRACKET | 2 | | |
| 5 | 590798520063 | | WIPER | 1 | | |
| 6 | 590798520064 | | SCREW HEX HD M8x45 | 2 | | |
| 7 | 590798520065 | | FLOOR | 1 | | |
| 8 | 590798520066 | | BLADE REAR RUBBER | 1 | | |
| 8 | 590798520114 | | BLADE REAR NR | 1 | | OPTIONAL |
| 8 | 590798520115 | | BLADE REAR PU | 1 | | OPTIONAL |
| 9 | 590798520068 | | BATTEN | 1 | | |
| 10 | 590798520069 | | SCREW HEX HD M8x70 | 2 | | |
| 11 | 590798520070 | | SCREW HEX HD M8x60 | 4 | | |
| 12 | 590798520071 | | BUMPER ROLLER | 2 | | |
| 13 | 590198520122 | | NUT M8 | 6 | | |
| 14 | 590798520067 | | BLADE FRONT RUBBER | 1 | | |
| 14 | 590798520116 | | BLADE FRONT NR | 1 | | OPTIONAL |
| 14 | 590798520117 | | BLADE FRONT PU | 1 | | OPTIONAL |
| 15 | 590798520123 | | WATERPROOF COVER | 4 | | |
| 16 | 590798520072 | | HANDLE | 2 | | |
| 17 | 590798520073 | | HANDLE | 4 | | |
| 18 | 590798510014 | | SQUEEGEE ASSEMBLY | 1 | | |

## 06 Retaining edge (590746021505)

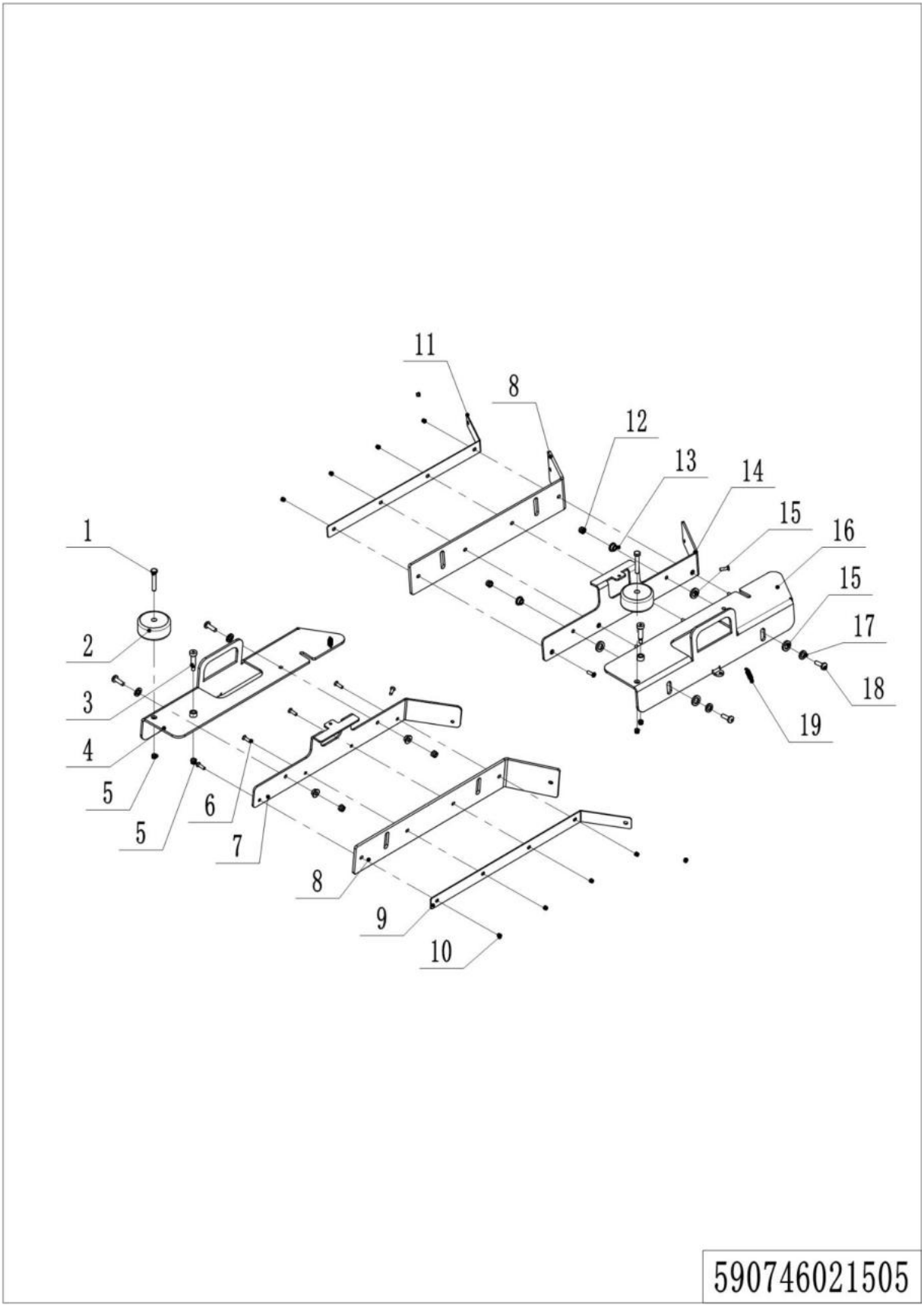


---

**1= Supply as package. 2= Supply with constraints. 3= Phasing-out supply. 4= Supply as assembly. 5= Check other tables.**

## 06 Retaining edge（590746021505）

| No. | Item Code | Mark | Item Description | Qty. | Substitute | Note |
|---|---|---|---|---|---|---|
| 1 | 590798520054 | | SCREW SOCKET HD M10x55 | 2 | | |
| 2 | 590798520013 | | BUMPER ROLLER | 2 | | |
| 3 | 590798520044 | | SHOULDER SCREW | 2 | | |
| 4 | 590798520018 | | RIGHT SHEET METAL | 1 | | Use in NR1060 |
| 4 | 590798520080 | | RIGHT SHEET METAL | 1 | | Use in NR860P |
| 5 | 590198520065 | | NUT HEX SELF LOCKING M10 | 2 | | |
| 6 | 590198520143 | | SCREW SOCKET HD M6x20 | 6 | | |
| 7 | 590798520020 | | RIGHT FIXING PLATE | 1 | | Use in NR1060 |
| 7 | 590798520082 | | RIGHT FIXING PLATE | 1 | | Use in NR860P |
| 8 | 590798520001 | | RUBBER STRIP | 2 | | Use in NR1060 |
| 8 | 590798520076 | | RUBBER STRIP | 2 | | Use in NR860P |
| 9 | 590798520129 | | RIGHT BATTEN | 2 | | Use in NR1060 |
| 9 | 590798520130 | | RIGHT BATTEN | 2 | | Use in NR860P |
| 10 | 590198520067 | | NUT HEX SELF LOCKING M6 | 10 | | |
| 11 | 590798520021 | | LEFT BATTEN | 2 | | Use in NR1060 |
| 11 | 590798520083 | | LEFT BATTEN | 2 | | Use in NR860P |
| 12 | 590198520066 | | NUT HEX SELF LOCKING M8 | 4 | | |
| 13 | 590798520121 | | SPACER D8xD12x10 | 4 | | |
| 14 | 590798520019 | | LEFT FIXING PLATE | 1 | | Use in NR1060 |
| 14 | 590798520081 | | LEFT FIXING PLATE | 1 | | Use in NR860P |
| 15 | 590198520028 | | WASHER FLAT D12xD24x2.5 | 8 | | |
| 16 | 590798520017 | | LEFT SHEET METAL | 1 | | Use in NR1060 |
| 16 | 590798520079 | | LEFT SHEET METAL | 1 | | Use in NR860P |
| 17 | 590198520109 | | WASHER D8×D24×2 | 4 | | |
| 18 | 590198520100 | | SCREW HEX HD M8×25 | 4 | | |
| 19 | 590798520043 | | SPRING | 2 | | |

## 07 Solution assembly (590746021506)

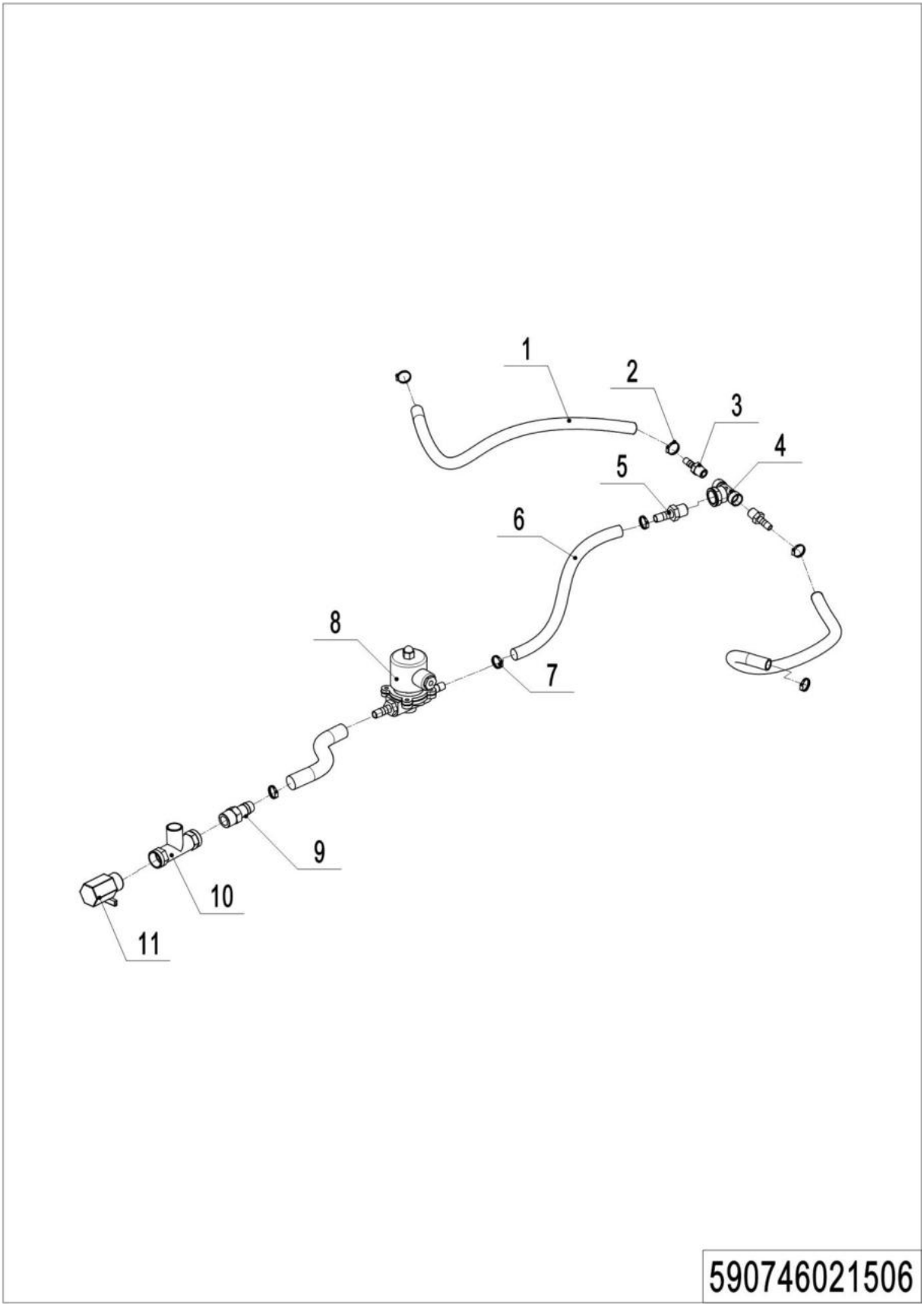


---

**1= Supply as package. 2= Supply with constraints. 3= Phasing-out supply. 4= Supply as assembly. 5= Check other tables.**

## 07 Solution assembly（590746021506）

| No. | Item Code | Mark | Item Description | Qty. | Substitute | Note |
|---|---|---|---|---|---|---|
| 1 | 590198520062 | | HOSE PVC | 0.8m | | |
| 2 | 590198520096 | | HOSE CLAMP D13-19 | 4 | | |
| 3 | 590498520200 | | CONNECTOR Ø12 | 2 | | |
| 4 | 590498520135 | | T WATER PIPE JOINT | 1 | | |
| 5 | 590498520018 | | CONNECTOR Ø19 | 1 | | |
| 6 | 590498520015 | | HOSE Ø19 | 1m | | |
| 7 | 590498520076 | | HOSE CLAMP D19-29 | 4 | | |
| 8 | 590498510007 | | SOLENOID VALVE 24V | 1 | | |
| 9 | 590498520144 | | STRAIGHT PIPE | 1 | | |
| 10 | 590798520122 | | THREE-WAY PIPE | 1 | | |
| 11 | 590498520080 | | VALVE | 1 | | |

## 08 Wiper frame (590746017002)

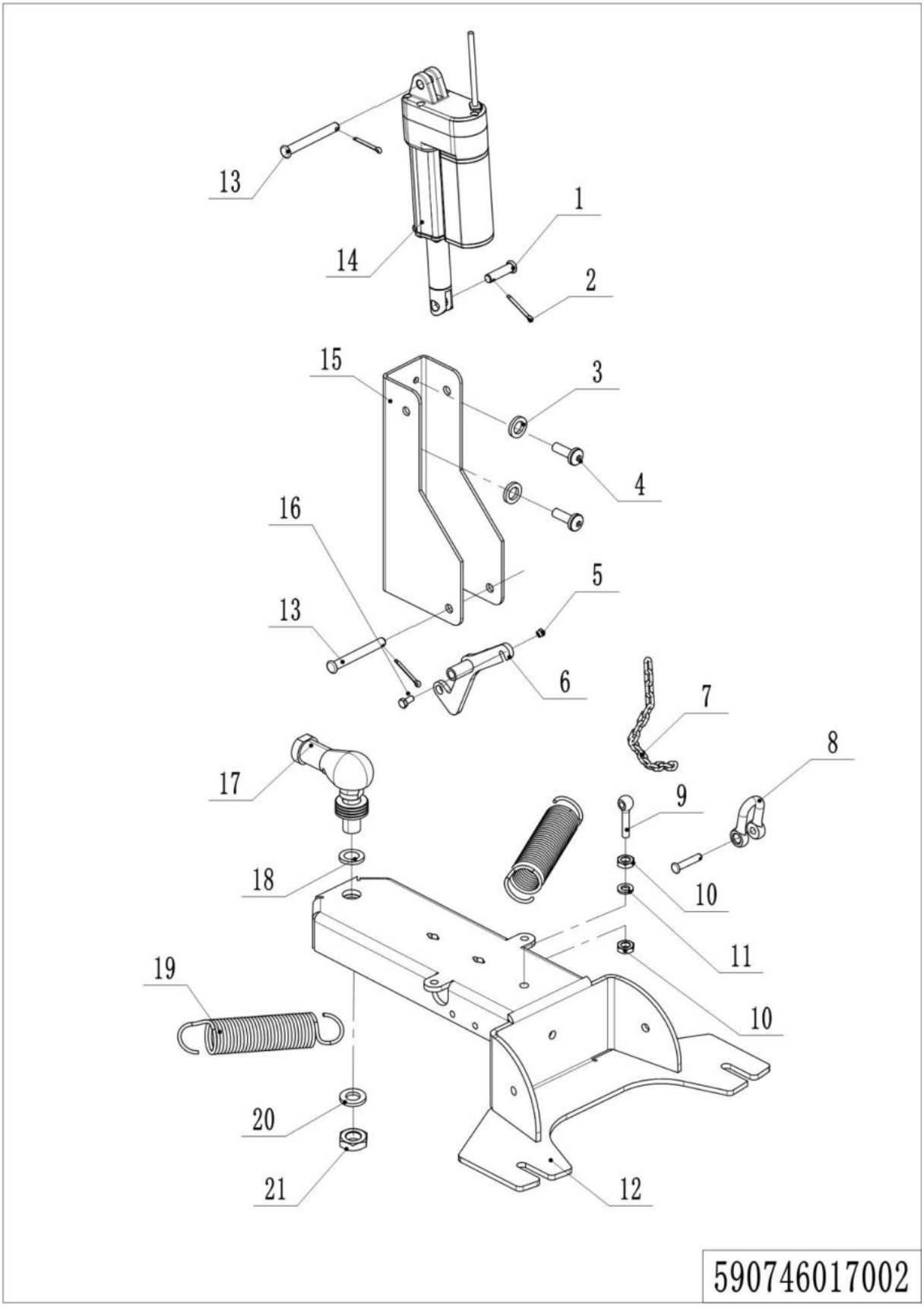

## 08 Wiper frame（590746017002）

| No. | Item Code | Mark | Item Description | Qty. | Substitute | Note |
|---|---|---|---|---|---|---|
| 1 | 590798520056 | | SHAFT 8x25 | 1 | | |
| 2 | 590198520180 | | SPLIT PIN 3 | 4 | | |
| 3 | 590398520051 | | WASHER FLAT D6x20x2 | 2 | | |
| 4 | 590398520048 | | SCREW M6x20 W WASHER | 2 | | |
| 5 | 590198520067 | | NUT HEX SELF LOCKING M6 | 1 | | |
| 6 | 590798520034 | | CONNNECTION ROD | 1 | | |
| 7 | 590498520128 | | CHAIN | 0.3m | | |
| 8 | 590498520121 | | LIFTING RING M6 | 1 | | |
| 9 | 590398520089 | | EYEBOLT M8x45 | 1 | | |
| 10 | 590198520122 | | NUT M8 | 2 | | |
| 11 | 590198520074 | | WAHSER SPLIT M8 | 1 | | |
| 12 | 590798520023 | | WIPER HOLDER | 1 | | |
| 13 | 590498520068 | | SHAFT 8x55 | 2 | | |
| 14 | 590798510002 | | REAR PUSH MOTOR | 1 | | |
| 15 | 590798520027 | | FIX SHEET METAL | 1 | | |
| 16 | 590198520084 | | SCREW HEX HD M6×20 | 1 | | |
| 17 | 590398520066 | | BALL BARING M16 | 1 | | |
| 18 | 590398520053 | | WASHER FLAT Ø16 | 6 | | |
| 19 | 590798520047 | | SPRING | 2 | | |
| 20 | 590398520086 | | WAHSER SPLIT M16 | 2 | | |
| 21 | 590398520063 | | NUT M16 | 1 | | |

## 09 Front body (590746021507)

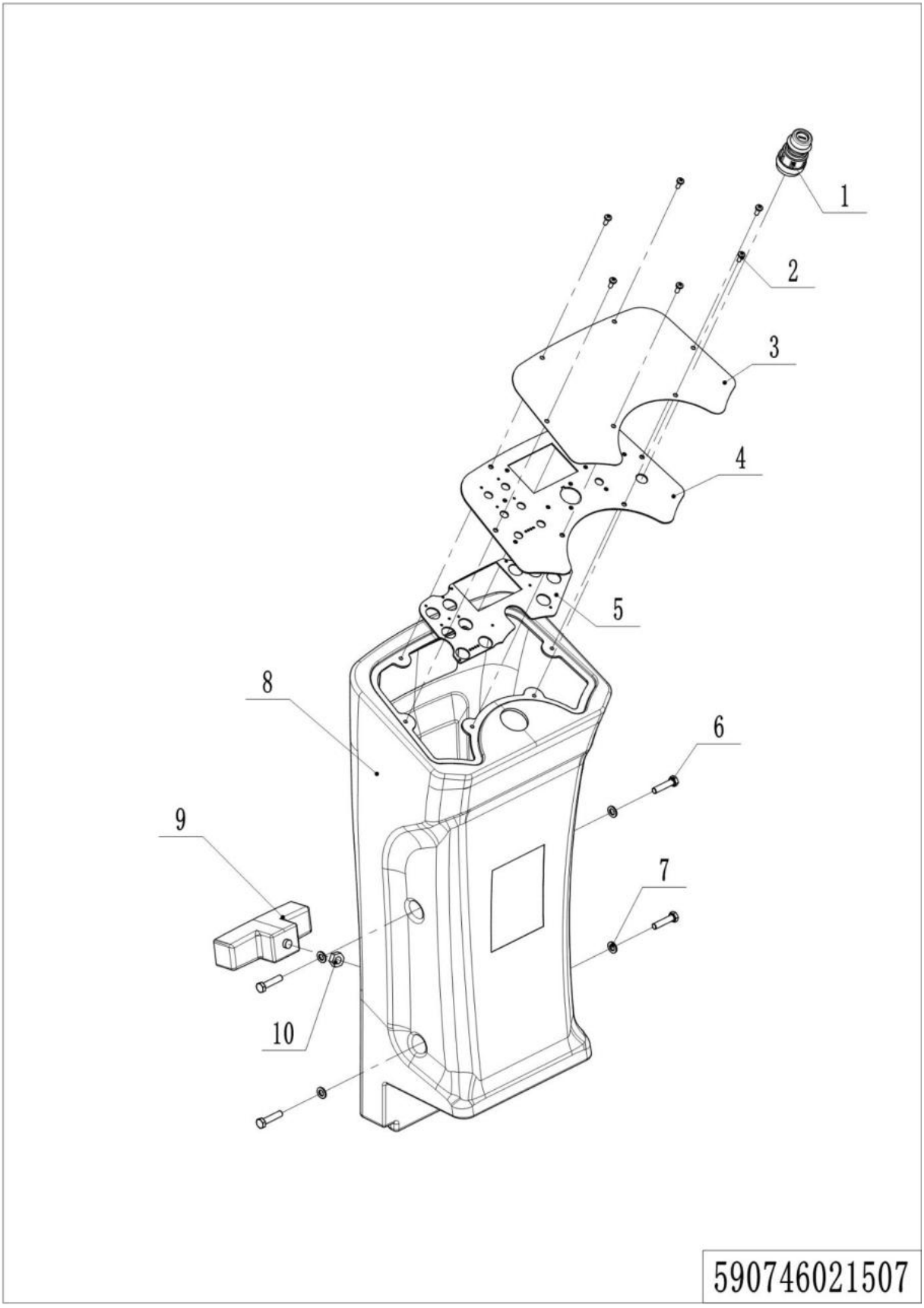


---

**1= Supply as package. 2= Supply with constraints. 3= Phasing-out supply. 4= Supply as assembly. 5= Check other tables.**

## 09 Front body（590746021507）

| No. | Item Code | Mark | Item Description | Qty. | Substitute | Note |
|---|---|---|---|---|---|---|
| 1 | 590798510015 | | START SWITCH WITH KEY | 1 | | |
| 2 | 590198520091 | | SCREW CYL HD M5x12 | 6 | | |
| 3 | 590798520000 | | DECAL | 1 | | |
| 4 | 590798520035 | | HOLDER | 1 | | |
| 5 | 590798510011 | | PCB CONTROL PANEL | 1 | | |
| 6 | 590498520130 | | SCREW SOCKET HD M8x35 | 4 | | |
| 7 | 590398520002 | | WASHER D8xD30x2.5 | 4 | | |
| 8 | 590798520011 | | FRONT COVER | 1 | | |
| 9 | 590398510009 | | LED LIGHT | 1 | | |
| 10 | 590198520122 | | NUT M8 | 1 | | |

## Chapter 3： Electrical parts

## 01 Electronic control components (590746033001)

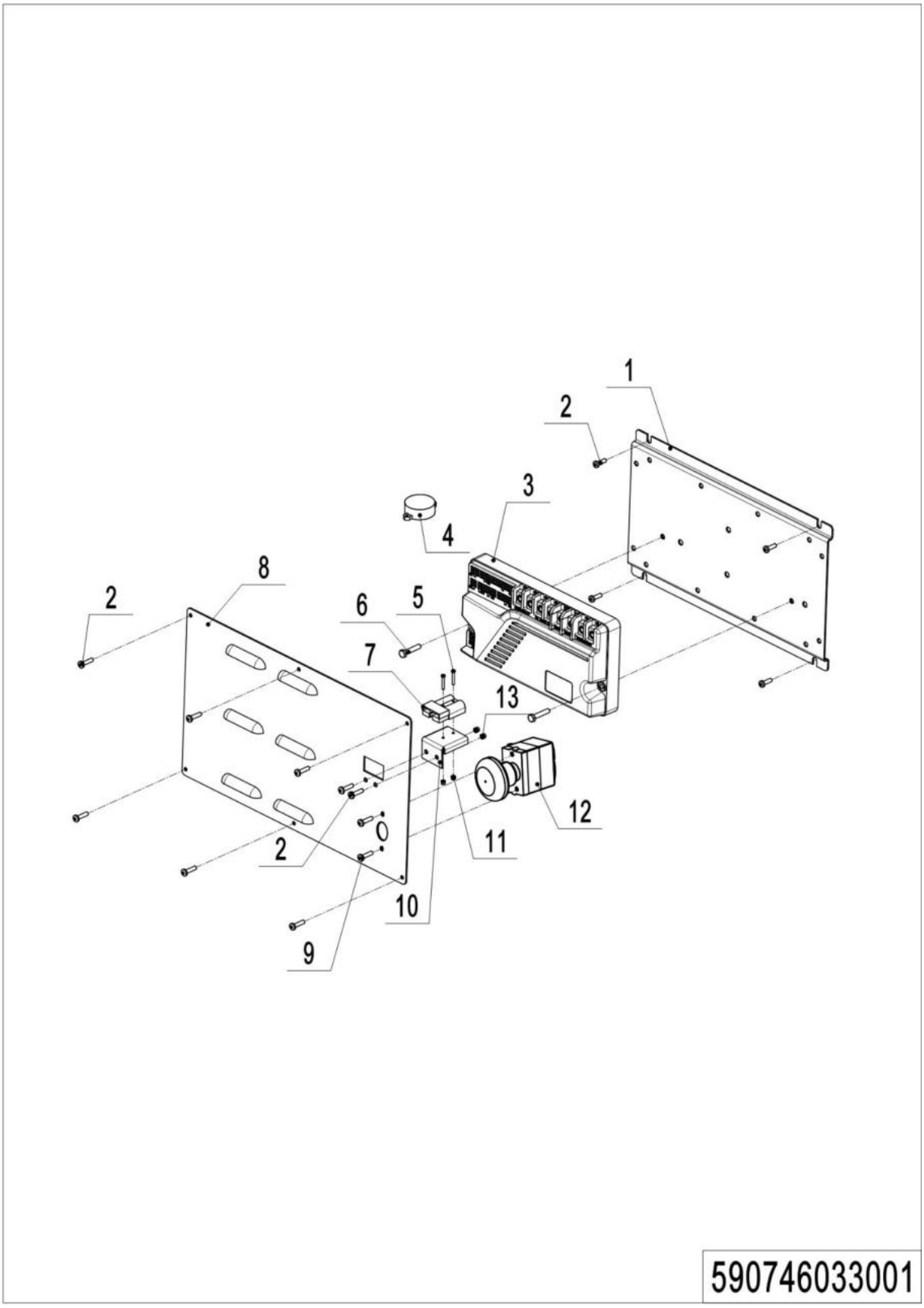


---

**1= Supply as package. 2= Supply with constraints. 3= Phasing-out supply. 4= Supply as assembly. 5= Check other tables.**

## 01 Electronic control components（590746033001）

| No. | Item Code | Mark | Item Description | Qty. | Substitute | Note |
|---|---|---|---|---|---|---|
| 1 | 590798520131 | | HOLDER | 1 | | |
| 2 | 590198520093 | | SCREW CYL HD M5x12 | 6 | | |
| 3 | 590798510010 | | ELECTRIC BOARD | 1 | | |
| 4 | 590398520091 | | BUZZER | 1 | | |
| 5 | 590398520078 | | SCREW CYL HD M3x20 | 4 | | |
| 6 | 590198520085 | | SCREW HEX HD M6x30 | 2 | | |
| 7 | 509198520183 | | MICROSWITCH | 1 | | |
| 8 | 590798510007 | | CHARGER WIRE | 1 | | |
| 9 | 590798520132 | | COVER | 1 | | |
| 10 | 590198520191 | | SCREW PAN HD M5×8 | 8 | | |
| 11 | 590398520032 | | HOLDER | 1 | | |
| 12 | 590198520102 | | NUT HEX SELF LOCKING M3 | 2 | | |
| 13 | 590798510013 | | EMERGENCY SWITCH | 1 | | |
| 14 | 590198520068 | | NUT HEX SELF LOCKING M5 | 2 | | |

## 02 Traction Battery (590746037001)

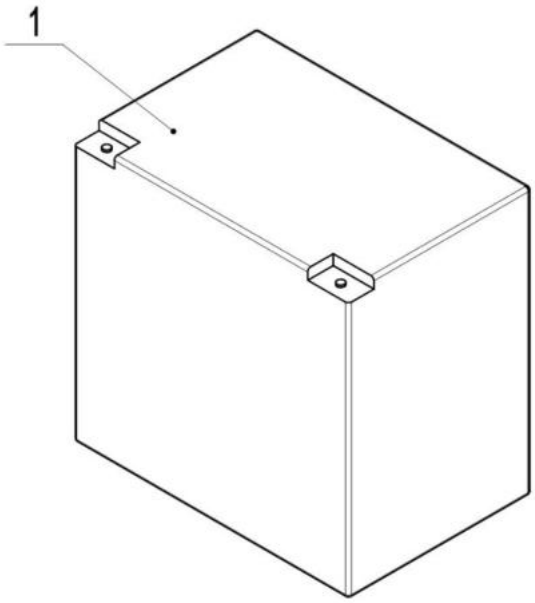


590746037001

---

**1= Supply as package. 2= Supply with constraints. 3= Phasing-out supply. 4= Supply as assembly. 5= Check other tables.**

## 02 Traction Battery（590746037001）

| No. | Item Code | Mark | Item Description | Qty. | Substitute | Note |
|---|---|---|---|---|---|---|
| 1 | 590798520100 | | BATTERY 6V200AH | 6 | | |

## 03 Charger (590746036501)

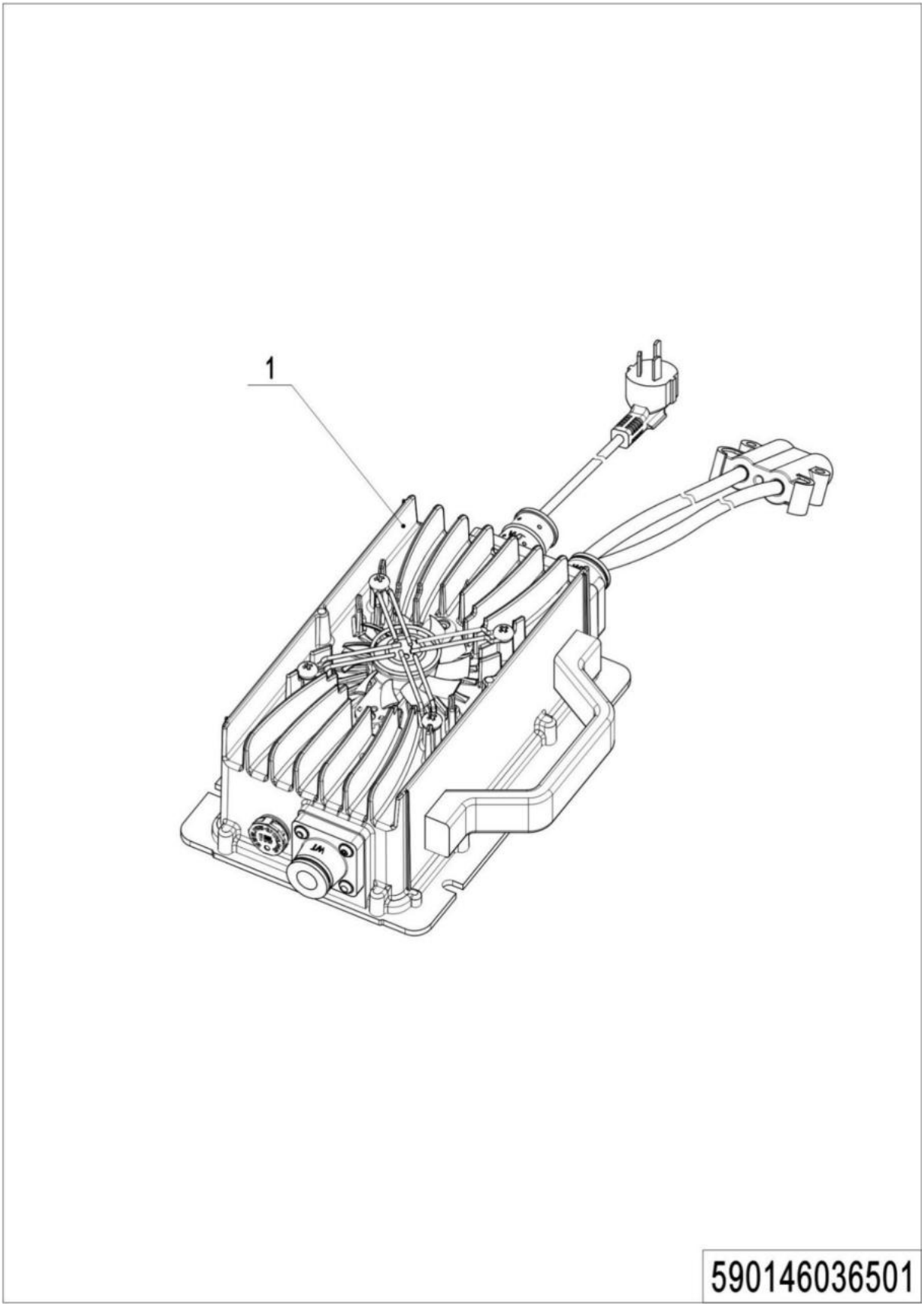

## 03 Charger（590746036501）

| No. | Item Code | Mark | Item Description | Qty. | Substitute | Note |
|---|---|---|---|---|---|---|
| 1 | 590798520101 | | CHARGE 36V25A(Asia) | 1 | | |
| 1 | 590798520102 | | CHARGE 36V25A(ENG) | 1 | | |
| 1 | 590798520103 | | CHARGE 36V25A(US) | 1 | | |
| 1 | 590798520104 | | CHARGE 36V25A(EU) | 1 | | |
| 1 | 590798520105 | | CHARGE 36V25A(AUS) | 1 | | |
| 1 | 590798520106 | | CHARGE 36V25A(ITA) | 1 | | |
| 1 | 590798520107 | | CHARGE 36V25A(SWE) | 1 | | |
| 1 | 590798520108 | | CHARGE 36V25A(ISR) | 1 | | |
| 1 | 590798520109 | | CHARGE 36V25A(BRA) | 1 | | |

## 04 Wire Harness (590746033002)

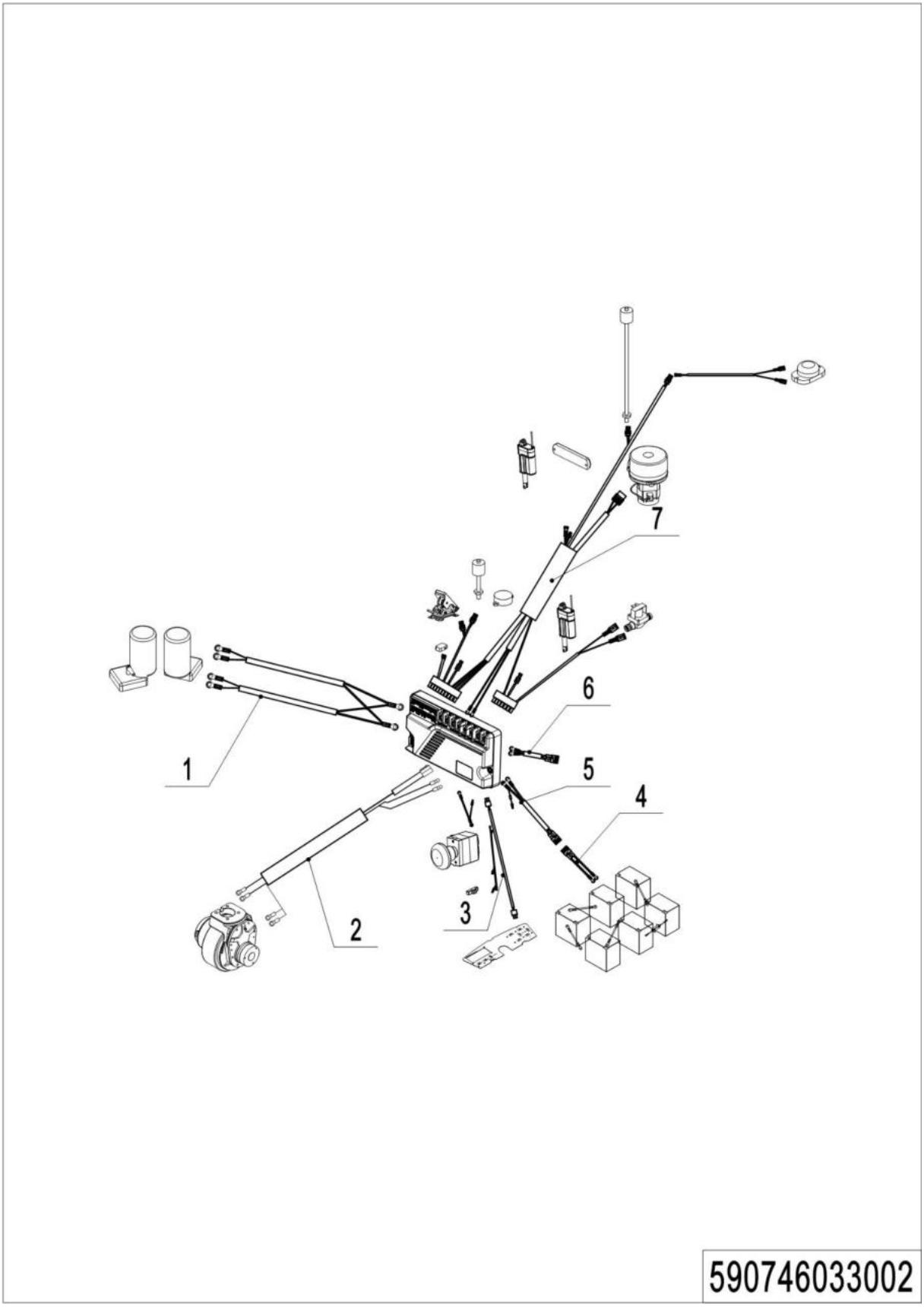


---

**1= Supply as package. 2= Supply with constraints. 3= Phasing-out supply. 4= Supply as assembly. 5= Check other tables.**

## 04 Wire Harness (590746033002)

| 序号 | 物料编码 | Mark | 物料名称 | 数量 | 替代零件号 | 说明 |
|---|---|---|---|---|---|---|
| 1 | 590798510016 | | Wire Harness | 1 | | |
| 2 | 590798510017 | | Wire Harness | 1 | | |
| 3 | 590798510018 | | Wire Harness | 1 | | |
| 4 | 590798510019 | | Wire Harness | 1 | | |
| 5 | 590798510020 | | Wire Harness | 1 | | |
| 6 | 590798510021 | | Wire Harness | 1 | | |
| 7 | 590798510022 | | Wire Harness | 1 | | |

## Chapter 4: Others

### 01 Labels and decals (590746047001)

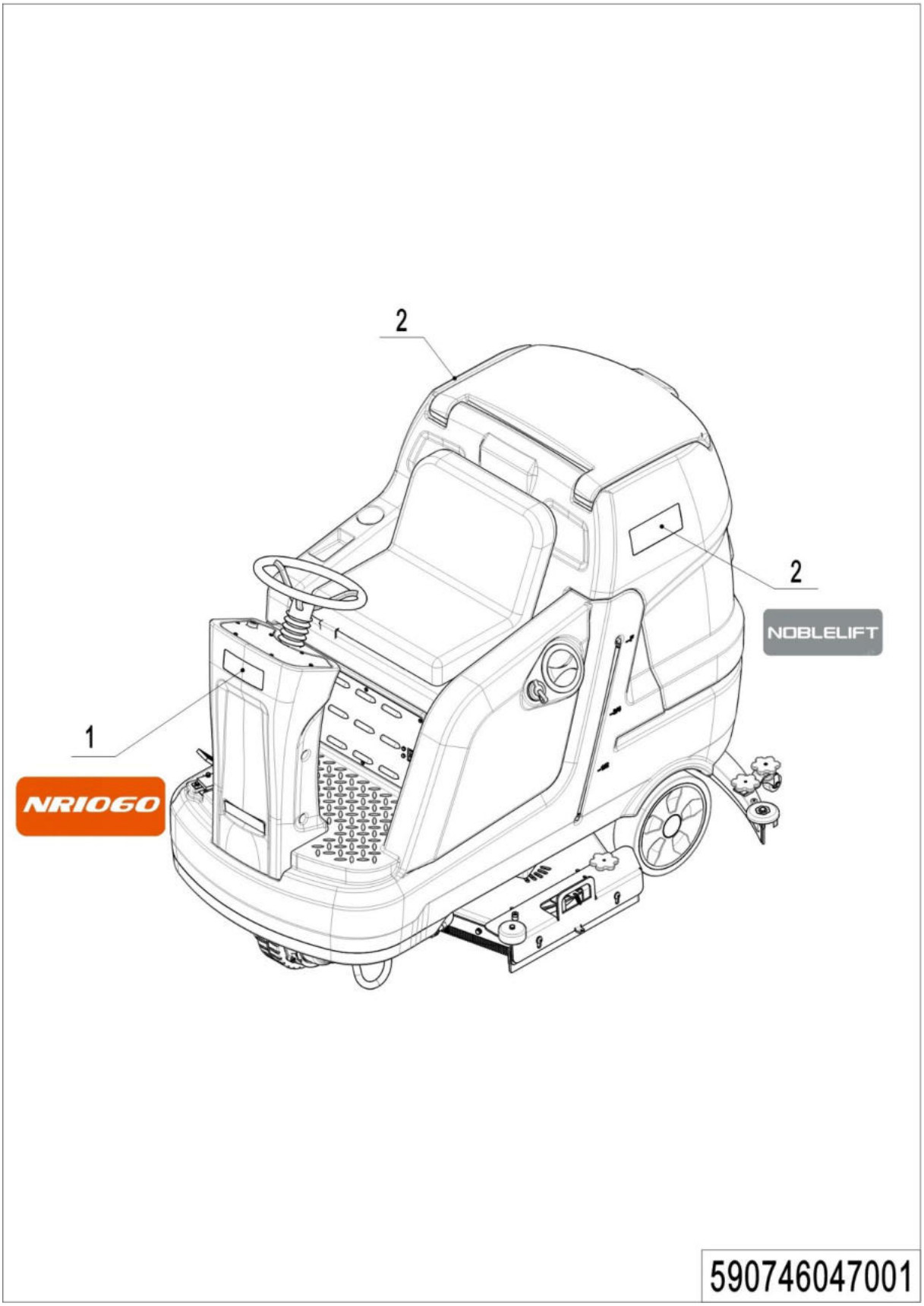


---

**1= Supply as package. 2= Supply with constraints. 3= Phasing-out supply. 4= Supply as assembly. 5= Check other tables.**

## 01 Labels and decals（590746047001）

| No. | Item Code | Mark | Item Description | Qty. | Substitute | Note |
|---|---|---|---|---|---|---|
| 1 | 590747020001 | | LABLE(NR1060) | 1 | | |
| 2 | 590498520111 | | LABLE(NOBLELIFT) | 2 | | |

## 02 Labels and decals (590746047002)

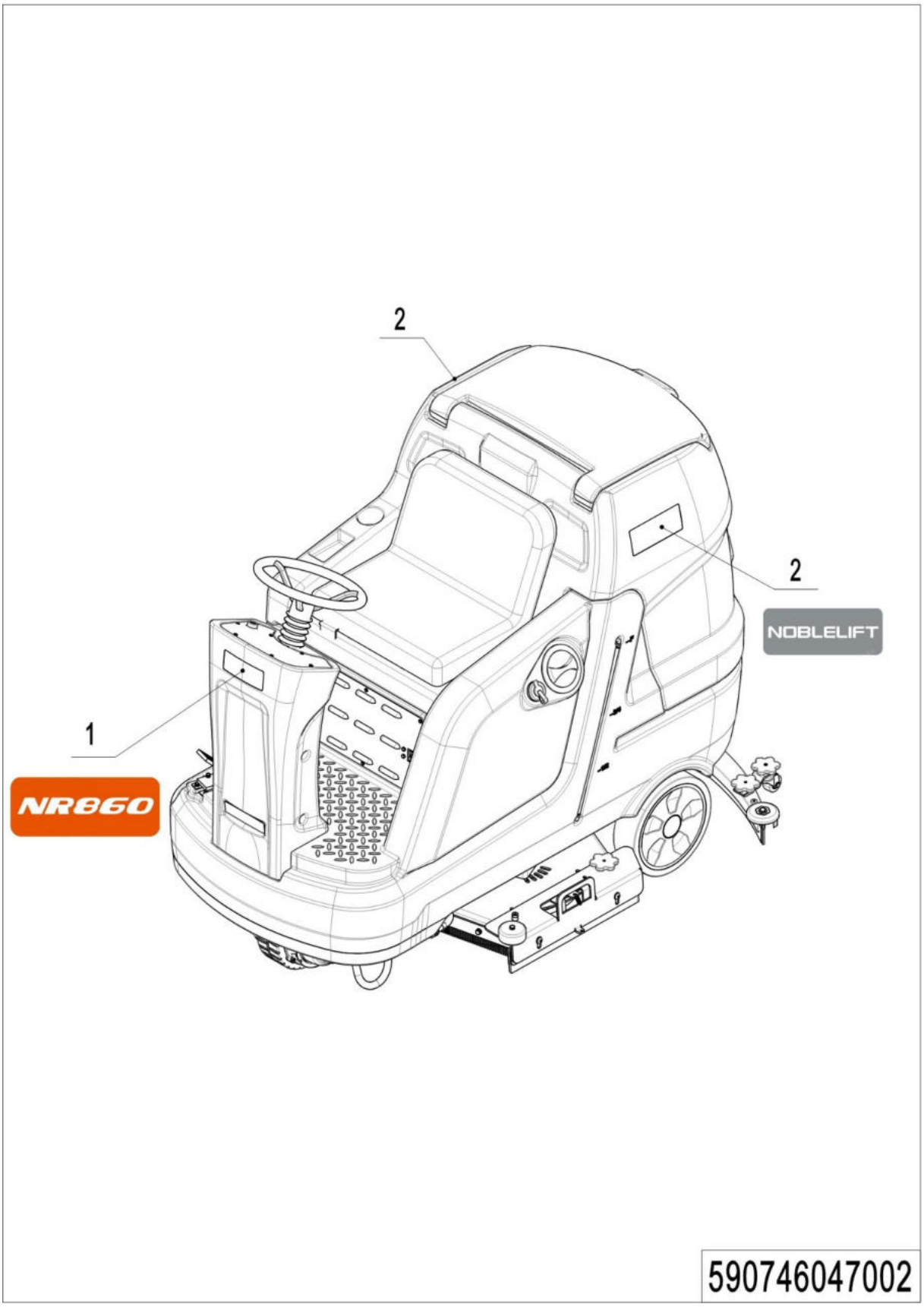


---

**1= Supply as package. 2= Supply with constraints. 3= Phasing-out supply. 4= Supply as assembly. 5= Check other tables.**

## 02 Labels and decals （590746047001）

| No. | Item Code | Mark | Item Description | Qty. | Substitute | Note |
|---|---|---|---|---|---|---|
| 1 | 590747020002 | | LABLE(NR860P) | 1 | | |
| 2 | 590498520111 | | LABLE(NOBLELIFT) | 2 | | |

## Appendix

# 01 Electrical Circuit Diagram (590746045501)

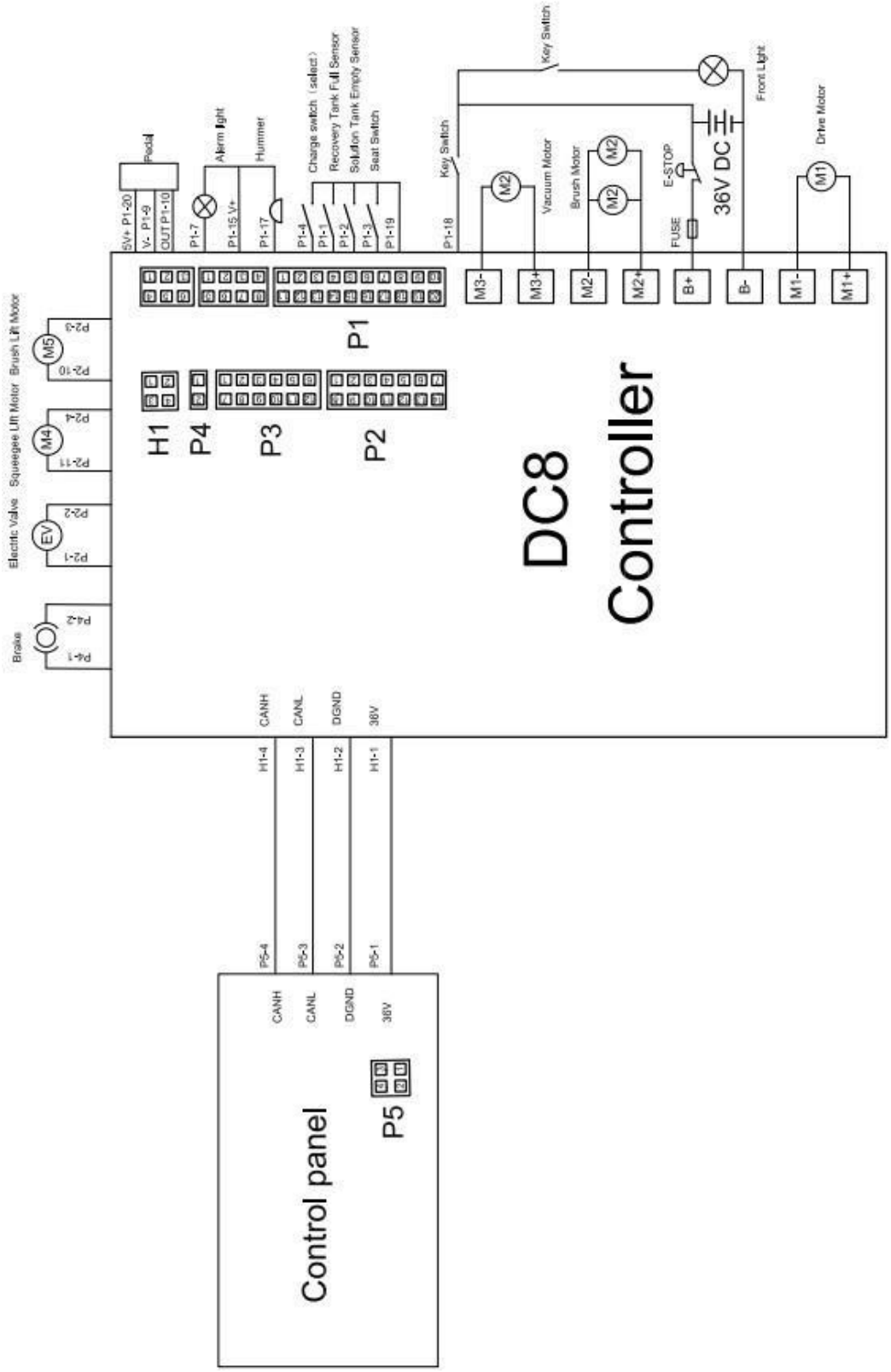

## 02 Easy Wornout Parts List

| No. | Item Code | Item Description | Qty. | Chapter/ Section/ Number |
|---|---|---|---|---|
| 1 | 590798510004 | ACCELERATOR | 1 | Chapter 2/01/02 |
| 2 | 590798520004 | FILTER | 1 | Chapter 2/01/09 |
| 3 | 590398510010 | ALARM LIGHT | 1 | Chapter 2/01/17 |
| 4 | 590198520061 | GASKET | 1.7m | Chapter 2/02/02 |
| 5 | 590798520041 | DRAIN HOSE | 1 | Chapter 2/02/06 |
| 6 | 590798520042 | DIRT SUCTION PIPE | 1 | Chapter 2/02/08 |
| 7 | 590798520038 | CHAIR | 1 | Chapter 2/02/16 |
| 8 | 590798510012 | SEAT SWITCH | 1 | Chapter 2/02/17 |
| 9 | 590798510003 | VACUUM MOTOR | 1 | Chapter 2/02/22 |
| 10 | 590798520039 | STEERING WHEEL COVER | 1 | Chapter 2/03/01 |
| 11 | 590798510005 | REDUCTION GEARMOTOR | 2 | Chapter 2/04/01 |
| 12 | 590798510001 | FRONT PUSH MOTOR | 1 | Chapter 2/04/26 |
| 13 | 590798520060 | BUMPER ROLLER | 2 | Chapter 2/05/02 |
| 14 | 590798520071 | BUMPER ROLLER | 2 | Chapter 2/05/12 |
| 15 | 590798510014 | SQUEEGEE ASSEMBLY | 1 | Chapter 2/05/18 |
| 16 | 590798520013 | BUMPER ROLLER | 2 | Chapter 2/06/02 |
| 17 | 590798520001 | RUBBER STRIP | 2 | Chapter 2/06/08 |
| 18 | 590798520076 | RUBBER STRIP | 2 | Chapter 2/06/08 |
| 19 | 590498510007 | SOLENOID VALVE 24V | 1 | Chapter 2/07/08 |
| 20 | 590798510002 | REAR PUSH MOTOR | 1 | Chapter 2/08/14 |
| 21 | 590798510015 | START SWITCH WITH KEY | 1 | Chapter 2/09/01 |
| 22 | 590398510009 | LED LIGHT | 1 | Chapter 2/09/09 |
| 23 | 590798510013 | EMERGENCY SWITCH | 1 | Chapter 3/01/13 |

---

**1= Supply as package. 2= Supply with constraints. 3= Phasing-out supply. 4= Supply as assembly. 5= Check other tables.**

## 03 Consumable Parts List

| No. | Item Code | Item Description | Qty. | Chapter/ Section/ Number |
|---|---|---|---|---|
| 1 | 590398520092 | BRUSH | 2 | Chapter 2/04/34 |
| | 590398520093 | MAGNETIC PAD | 2 | Chapter 2/04/34 |
| | 590798520110 | BRUSH(SOFT) | 2 | Chapter 2/04/34 |
| | 590798520111 | BRUSH(HARD) | 2 | Chapter 2/04/34 |
| | 590798520074 | BRUSH | 2 | Chapter 2/04/34 |
| | 590798520075 | MAGNETIC PAD | 2 | Chapter 2/04/34 |
| | 590798520112 | BRUSH(SOFT) | 2 | Chapter 2/04/34 |
| | 590798520113 | BRUSH(HARD) | 2 | Chapter 2/04/34 |
| 2 | 590798520066 | BLADE REAR RUBBER | 1 | Chapter 2/05/08 |
| | 590798520114 | BLADE REAR NR | 1 | Chapter 2/05/08 |
| | 590798520115 | BLADE REAR PU | 1 | Chapter 2/05/08 |
| 3 | 590798520067 | BLADE FRONT RUBBER | 1 | Chapter 2/05/14 |
| | 590798520116 | BLADE FRONT NR | 1 | Chapter 2/05/14 |
| | 590798520117 | BLADE FRONT PU | 1 | Chapter 2/05/14 |
| 4 | 590798520001 | RUBBER STRIP | | Chapter 2/06/08 |
| | 590798520076 | RUBBER STRIP | | Chapter 2/06/08 |

---

**1= Supply as package. 2= Supply with constraints. 3= Phasing-out supply. 4= Supply as assembly. 5= Check other tables.**