Print Number: Print Date:

NOBLELIFT

Scan QR Code for More

Ride-on scrubber

NR530

Parts Manual

590346020101

Version V06

Scrubber Identification Number From:

Parts Manual NR530-PM06EN

Please order parts from authorized dealers of Noblelift Intelligent Equipment Co., LTD.

In order to avoid wrong delivery, all the orders for spare parts should specify the following items:

- Truck model, identification number and manufacture year.
- Orders for spare parts of mast, hydraulic transmission unit, steering axle, motor, etc. shall indicate the manufacture number of these parts.
- Codes for Noblelift spare parts are shown in the table of parts manual. Please also pay attention to the description of supply status, order quantity, etc. (check the number listed in "Mark" column of the parts manual).

"Mark" Column:

The unmarked indicates the parts are in short supply cycle.

Number 1: supply as package. Indicating these that parts are small parts and seal parts, which are supplied in package unit and in short supply cycle.

Number 2: supply with constraints. Indicating that these spare parts are not in stock and will be prepared for production after receiving the order from customers, which are in long supply cycle.

Number 3: phasing-out supply. Indicating that these parts will be replaced by new parts due to technical improvements and the current stock will not be available when these parts run out. Please check the description of technical improvements notice.

Number 4: supply as assembly. Indicating that these parts are assembly parts defined by manufacture process, which cannot be supplied as a single part.

Number 5: check other tables.

This parts manual is the property of Noblelift and can be shared under the confidential agreement only, Noblelift has the right to claim for compensation of any unauthorized use. Copy without permission is not allowed. Figures in the manual are not limited by the original design. Noblelift Intelligent Equipment Co., LTD reserves the right to improve the products for continuous technology progress.

Table of Contents

Chapter 1: Drive system 1
01 Drive unit (590346013501) 1
Chapter 2：Truck Frame 5
01 Solution tank (590346021501) 5
02 Recovery tank (590346021502) 7
03 Brush system (590346021503) 9
04 Front electric motor assembly (590346021504) 11
05 Squeegee system (590346021505) 13
06 Solution assembly (590346021506) 15
07 Wheels (590346017001) 17
Chapter 2：Electrical parts 19
01 Operating panel (590346010001) 19
02 Electronic control components (590346033001) 21
03 Traction Battery (590346037001) 23
04 Charger (590146036501) 25
05 Wire Harness (590346033002) 27
Chapter 4：Others 29
01 Labels and decals (590346047001) 29
Appendix 31
01 Electrical Circuit Diagram (590346045501) 31
02 Easy Wornout Parts List 32
03 Consumable Parts List 33

Chapter 1: Drive system

01 Drive unit (590346013501)

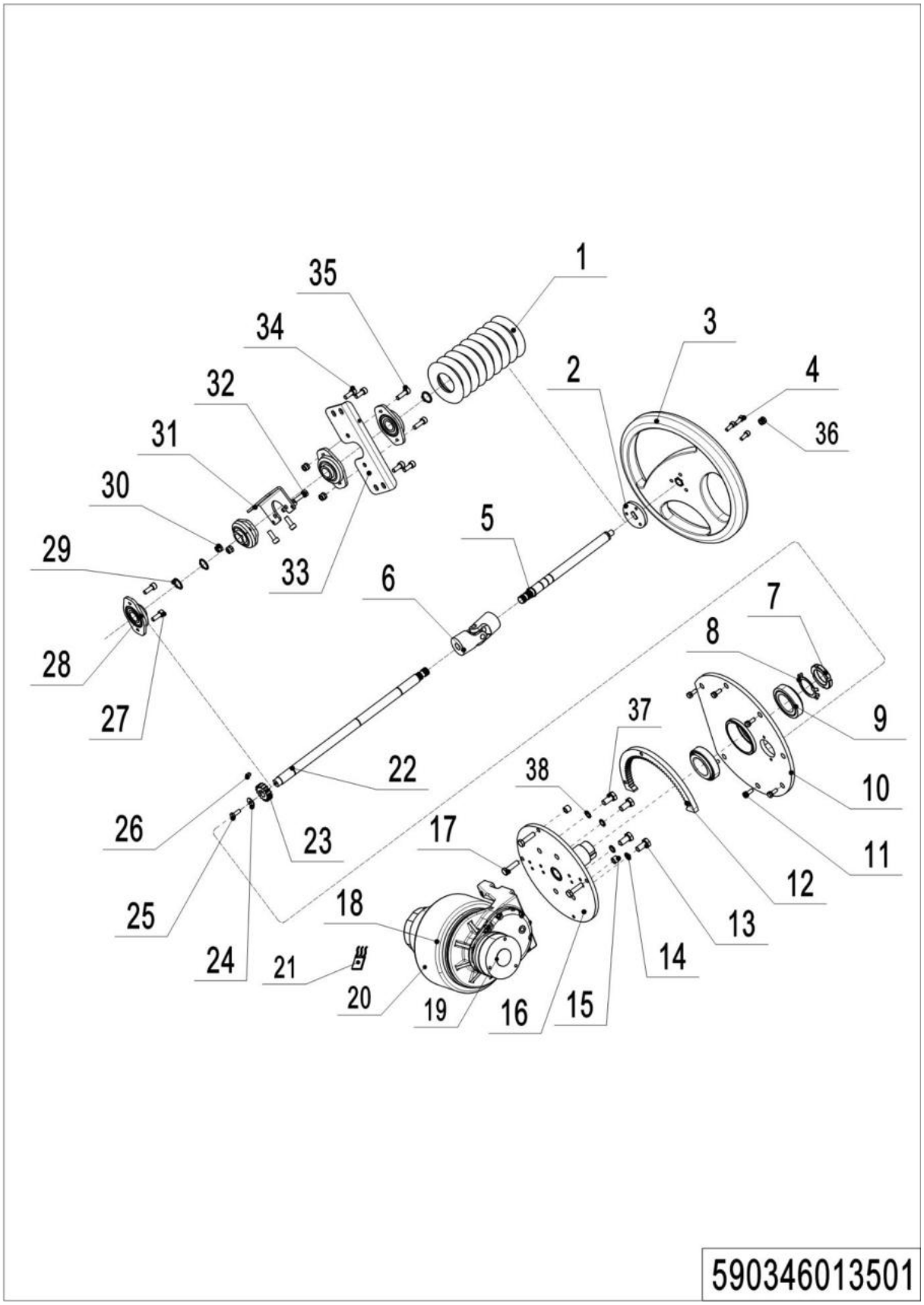

01 Drive unit (590346013501)

No.	Item Code	Mark	Item Description	Qty.	Substitute	Note
1	590398520041		RUBBER	1		
2	590398520039		HOLDER	1		
3	590398520042		STEERING WHEEL	1		
4	590398520056		SCREW SOCKET HD M6×10	3		
5	590398520034		TOP SHAFT	1		
6	590398520077		CARDAN	1		
7	590398520065		NUT M36×1.5	1		
8	590398520054		WASHER M36	1		
9	590398520075		BEARING	2		
10	590398520018		HOLDER	1		
11	590198520069		SCREW M8×20 W WASHER	6		
12	590498520042		GEAR RING	1		
13	590198520126		SCREW HEX HD M10×25	2		
14	590198520073		WASHER SPLIT M10 SS	2		
15	590398520072		SPACE 8×12×10	3		
16	590398520017		SUPPORT	1		
17	590198520145		SCREW HEX HD M8×30	3		
18	590398510000		DRIVE MOTOR 450W	1		
19	590398520104		BRAKE	1		
20	590398520103		WHEEL RING	1		
21	590398520099		CARBON BRUSH	1		
22	590398520033		DOWN SHAFT	1		
23	590398520037		COG WHEEL	1		
24	590398520051		WASHER FLAT D6×20×2	1		
25	590398520055		SCREW CYL HD M6×12	1		
26	590398520076		KEY 5×5×10	1		
27	590398520048		SCREW M6×20 W WASHER	2		
28	590398520067		BRARING HOLDER	4		
29	590398520061		RETAINING RING D17	4		
30	590198520067		NUT HEX SELF LOCKING M6	4		

01 Drive unit (590346013501) (Continuation)

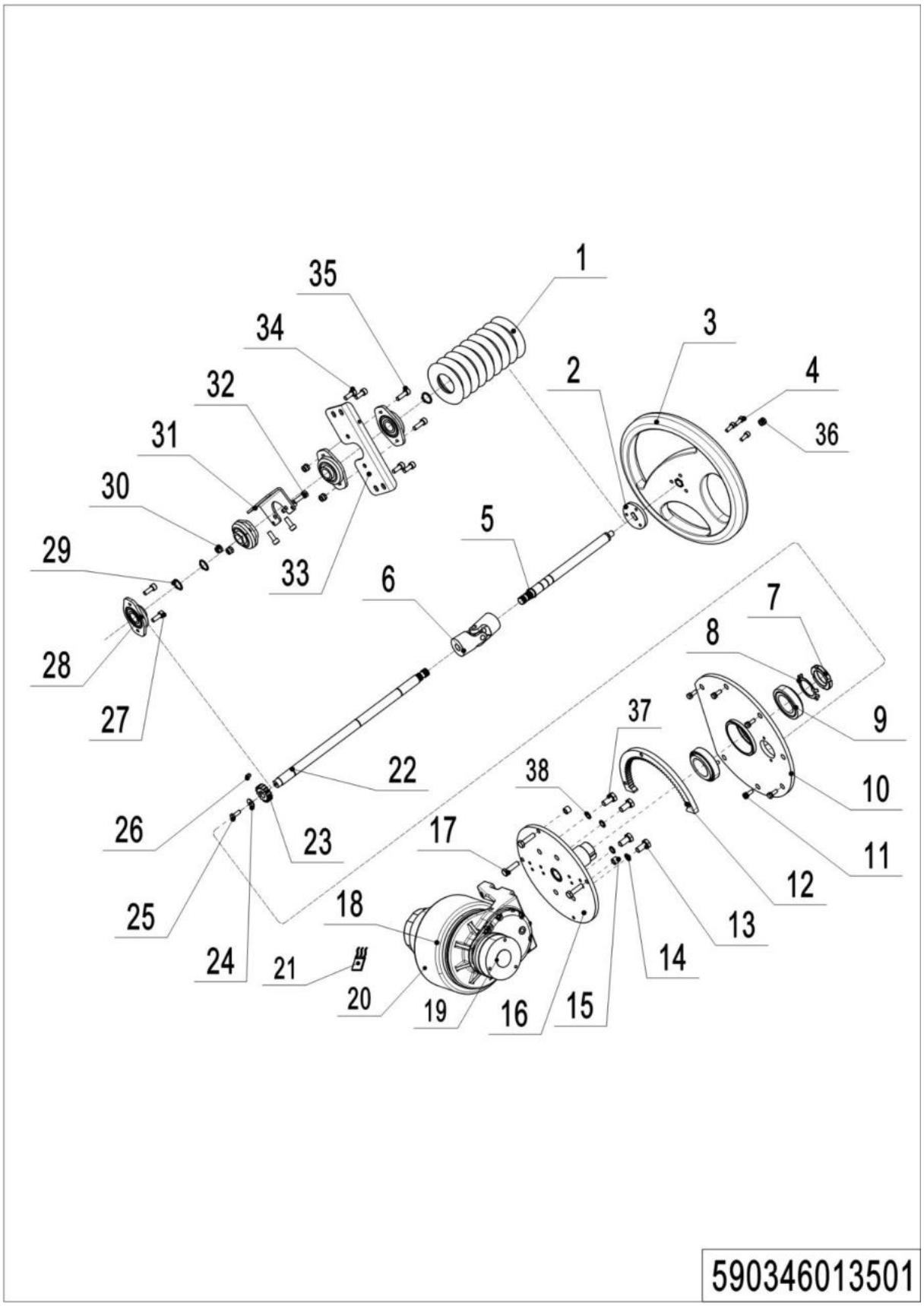

01 Drive unit (590346013501) (Continuation)

No.	Item Code	Mark	Item Description	Qty.	Substitute	Note
31	590398520019		HOLDER 1 FOR BEARING	1		
32	590198520083		SCREW HEX HD M6×16	2		
33	590398520021		HOLDER	1		
34	590198520142		SCREW M6×16 W WASHER	6		
35	590198520085		SCREW SOCKET HD M6×30	2		
36	590198520065		NUT HEX SELF LOCKING M10	1		
37	590198520181		SCREW M10x30 W WASHER	2		
38	590198520081		WAHSER FLAT D10xD20x2.5	2		

Chapter 2： Truck Frame

01 Solution tank (590346021501)

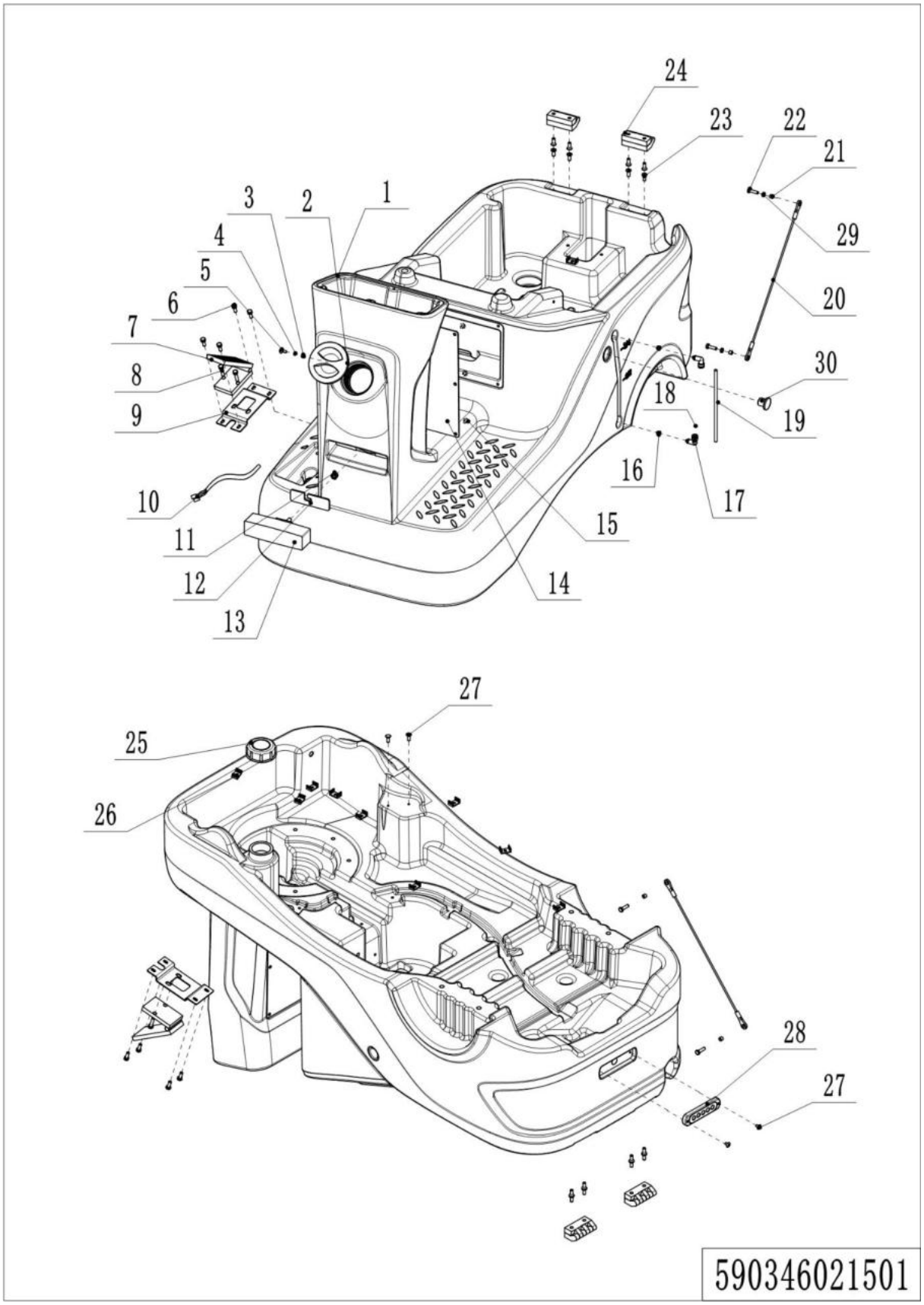

01 Solution tank (590346021501)

No.	Item Code	Mark	Item Description	Qty.	Substitute	Note
1	590398520006		SOLUTION TANK	1		
2	590398520007		COVER	1		
3	590198520102		NUT HEX SELF LOCKING M3	1		
4	590198520079		WASHER FLAT D6×D18	1		
5	590398520078		SCREW CYL HD M3×20	1		
6	590398520042		SCREW M6×16 W WASHER	4		
7	590398510006		ACCELERATOR	1		
8	590198520148		SCREW M6×20 W WASHER	2		
9	590398520022		HOLDER	1		
10	590398520096		MODULE	1		
11	590198520066		NUT HEX SELF LOCKING M8	1		
12	590398520030		HOLDER FOR LIGHT	1		
13	590398510009		LED LIGHT	1		
14	590398520029		FRONT COVER	1		
15	590198520093		SCREW CYL HD M5×12	6		
16	590198520136		RUBBER PLUG	2		
17	590198520128		L CONNECTOR 8	2		
18	590198520130		BALL Ø6.5	1		
19	590198520139		HOSE 8	0.21		0.21m
20	590398520073		CABLE	1		
21	590398520074		SPACER	2		
22	590198520083		SCREW HEX HD M6×16	2		
23	590198520143		SCREW SOCKET HD M6×20	8		
24	590198520129		HINGE	2		
25	590398520008		COVER	1		
26	590198520095		FLAT TIE HOLDER	9		
27	590198520092		SCREW CYL HD M4×10	2		
28	590398510010		ALARM LIGHT	1		
29	590198520079		WASHER FLAT D6×D18	2		
30	590198520193		COVER 25	2		

02 Recovery tank (590346021502)

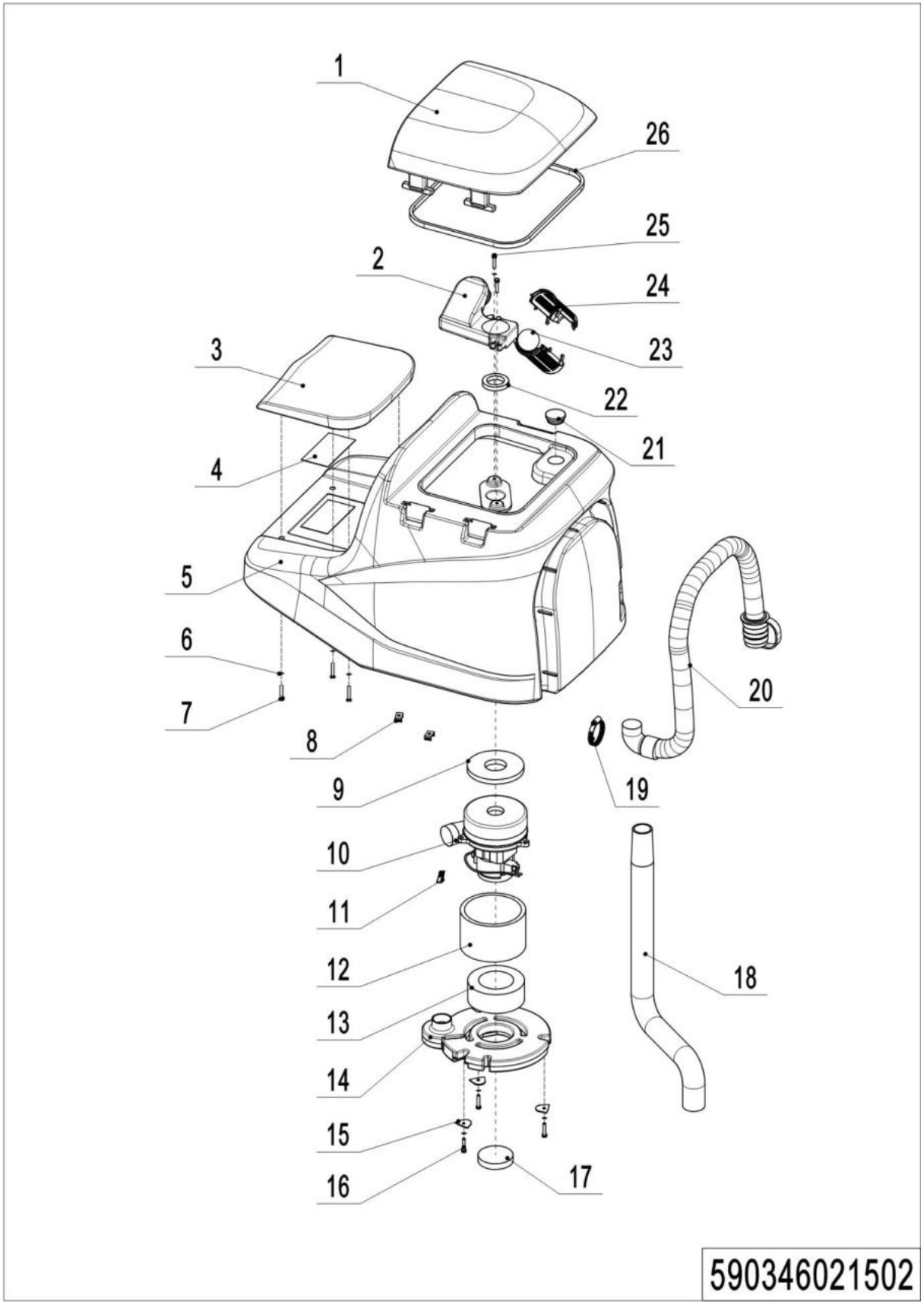

02 Recovery tank (590346021502)

No.	Item Code	Mark	Item Description	Qty.	Substitute	Note
1	590398520010		RECOVERY TANK COVER	1		
2	590198520013		SUPPORT FOR CAGE	1		
3	590398520043		SEAT	1		
4	590398510001		SENSOR FOR SEAT	1		
5	590398520009		RECOVERY TANK	1		
6	590198520079		WASHER FLAT D6×D18	9		
7	590198520085		SCREW SOCKET HD M6×30	4		
8	590198520095		FLAT TIE HOLDER	7		
9	590198520054		GASKET	1		
10	590398510007		VACUUM MOTOR	1		
11	590198520200		CARBON BRUSH	1		
12	590198520056		ACOUSTIC INSULATION PIPE	1		
13	590198520057		GASKET	1		
14	590198520020		VACUUM MOTOR COVER	1		
15	590198520040		PLATE FOR VACUUM COVER	3		
16	590398520084		SCREW HEX HD M6×35	3		
17	590198520058		FILTER FOAM	1		
18	590398520045		VACUUM HOSE	1		
19	590198520105		HOSE CLAMP D27-51	1		
20	590398520046		DRAIN HOSE	1		
21	590398520097		COVER	1		
22	590198520059		GASKET	1		
23	590198520015		FLOATING BALL	1		
24	590198520014		CAGE FOR FLOATING BALL	2		
25	590198520144		SCREW SOCKET HD M6×25	2		
	590198520061		GASKET	1.3		1.3m

03 Brush system (590346021503)

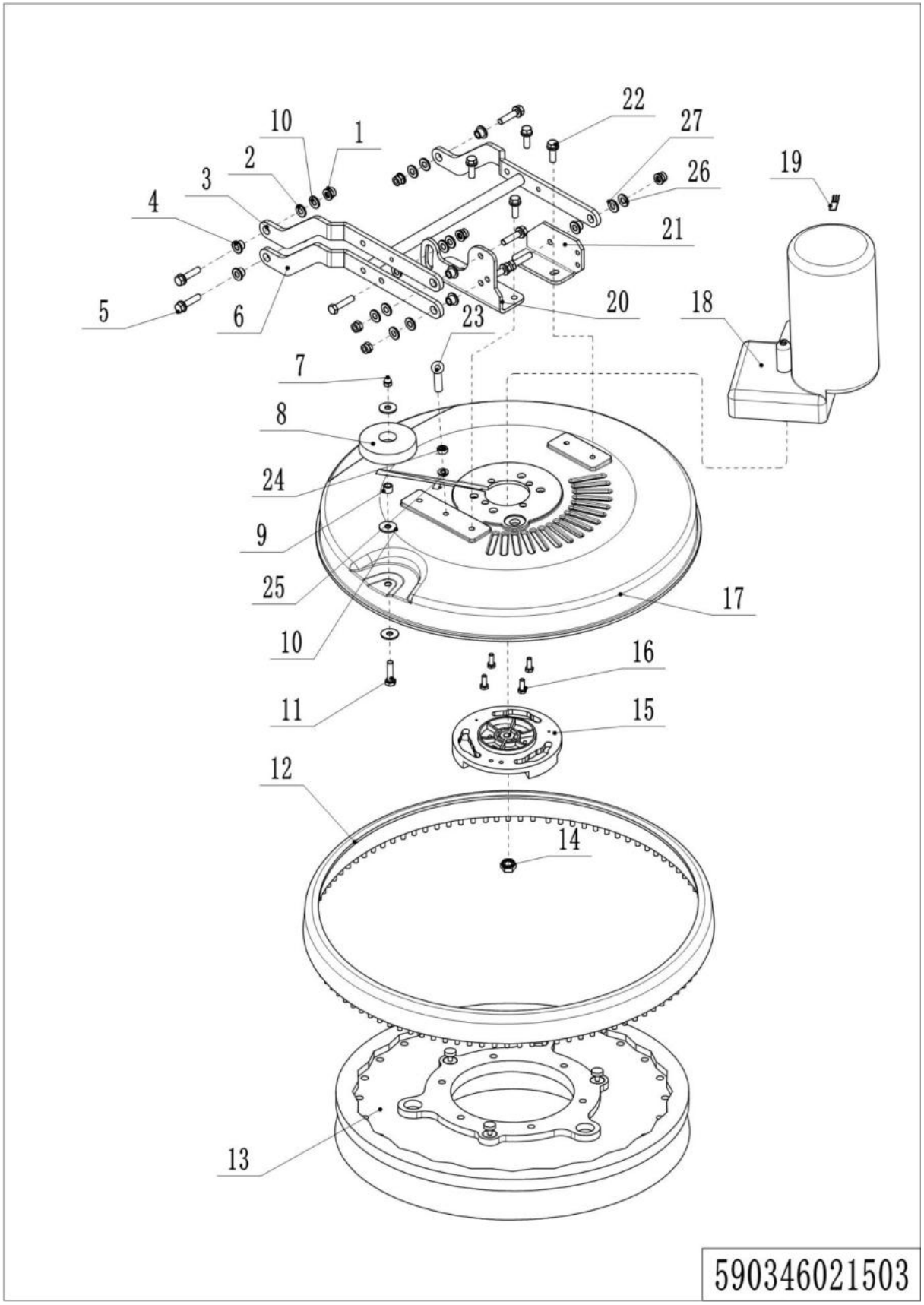

03 Brush system (590346021503)

No.	Item Code	Mark	Item Description	Qty.	Substitute	Note
1	590198520066		NUT HEX SELF LOCKING M8	7		
2	590398520085		WASHER FLAT	3		
3	590398520016		CONNNECTION ROD 2	1		
4	590398520072		SPACER D8×D12×10	7		
5	590198520145		SCREW HEX HD M8×30	7		
6	590398520015		CONNNECTION ROD 1	1		
7	590398520062		BLIND NUT M8	1		
8	590198520131		WHEEL	1		
9	590198520146		SPACER	1		
10	590398520052		WASHER FLAT D8×D16×1.5	6		
11	590198520100		SCREW HEX HD M8×25	1		
12	590398520004		WEATHER BAR(*)	1		
13	590398520082		BRUSH	1		
13	590398520087		BRUSH(SOFT)	1		OPTIONAL
13	590398520088		BRUSH(HARD)	1		OPTIONAL
13	590398520083		PAD DRIVER	1		
14	590398520064		NUT M20×1.5	1		
15	590398520020		COUPLING	1		
16	590198520142		SCREW M6×16 W WASHER	4		
17	590398520005		BRUSH DECK	1		
18	590398510005		REDUCTION GEARMOTOR	1		
19	590198520199		CARBON BRUSH	1		
20	590398520013		RIGHT HOLDER FOR DECK	1		
21	590398520012		LEFT HOLDER FOR DECK	1		
22	590398520049		SCREW M8×25 W WASHER	4		
23	590398520089		EYEBOLT M8x45	1		
24	590198520122		NUT M8	1		
25	590198520074		WAHSER SPLIT M8	1		
26	590198520109		WASHER D8×D24×2	4		
27	590198520028		WASHER D12×24×2	4		

04 Front electric motor assembly (590346021504)

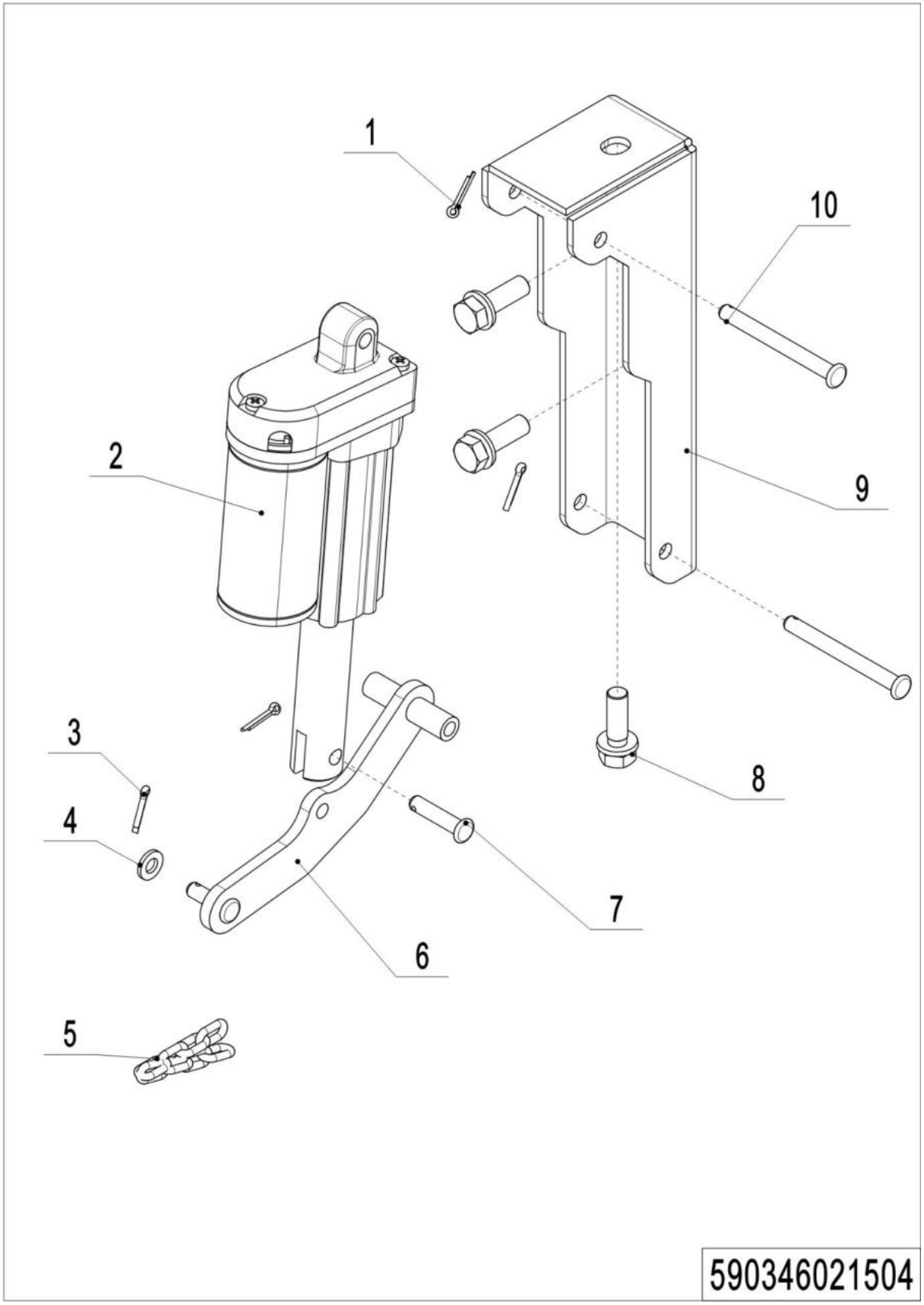

1= Supply as package. 2= Supply with constraints. 3= Phasing-out supply. 4= Supply as assembly. 5= Check other tables.

04 Front electric motor assembly (590346021504)

No.	Item Code	Mark	Item Description	Qty.	Substitute	Note
1	590398520069		SPLIT PIN 2	3		
2	590398510002		FRONT PUSH MOTOR	1		
3	590398520094		PIN	1		
4	590198520079		WASHER FLAT D6×D18	1		
5	590398520080		CHAIN	0.2		0.2m
6	590398520024		CONNNECTION ROD	1		
7	590398520059		SHAFT 6×25	1		
8	590398520057		SCREW M8×16 W WASHER	3		
9	590398520023		HOLDER	1		
10	590398520060		SHAFT 6×55	2		

05 Squeegee system (590346021505)

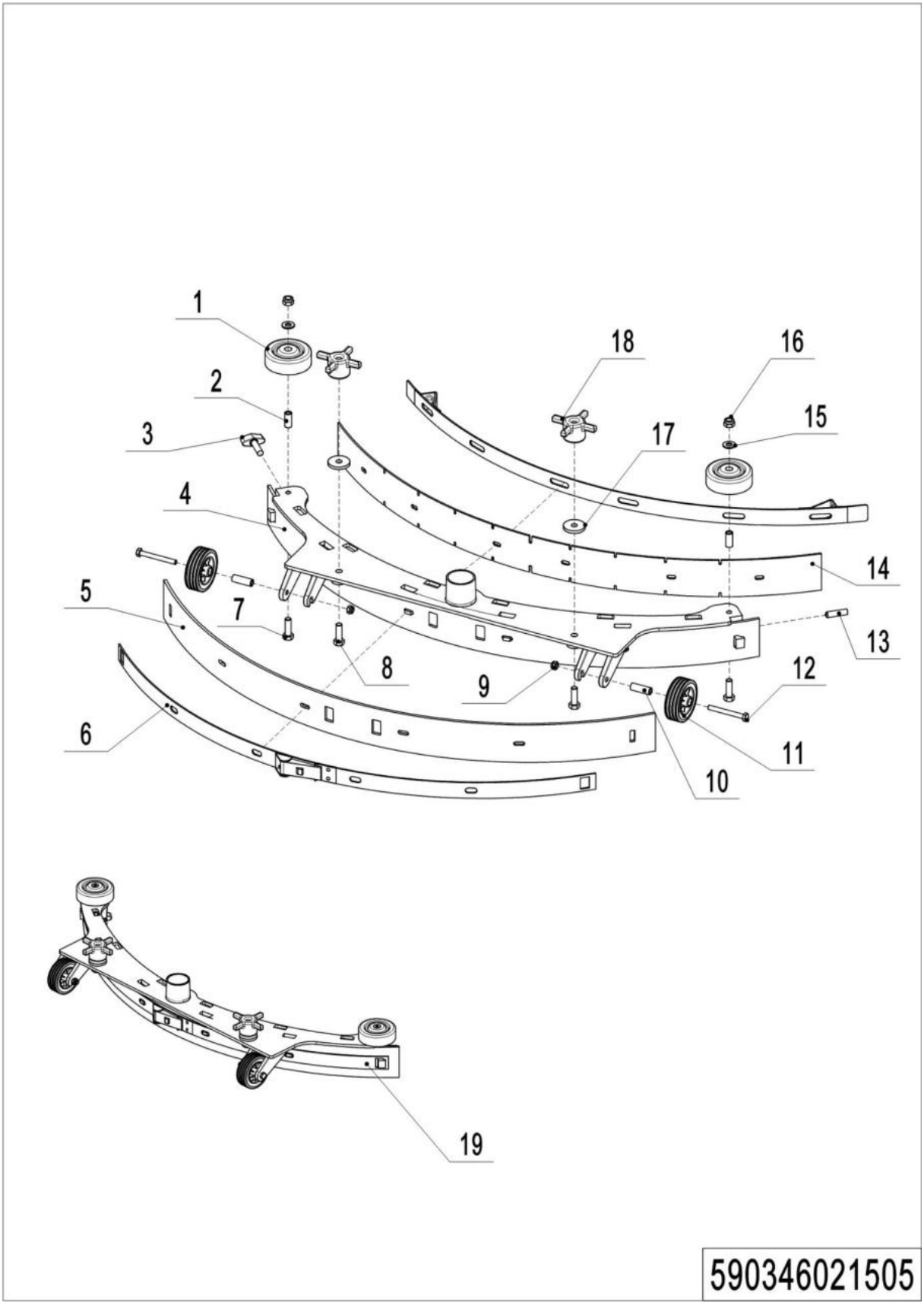

1= Supply as package. 2= Supply with constraints. 3= Phasing-out supply. 4= Supply as assembly. 5= Check other tables.

05 Squeegee system (590346021505)

No.	Item Code	Mark	Item Description	Qty.	Substitute	Note
1	590198520131		WHEEL	2		
2	590198520146		SPACER	2		
3	590198520148		SCREW 32	1		
4	590198520127		SQUEEGEE BLADE	1		
5	590198520138		BLADE REAR RUBBER	1		
5	590198520160		BLADE REAR NR	1		OPTIONAL
5	590198520164		BLADE REAR PU	1		OPTIONAL
6	590198520135		HOLDER FOR BLADE	1		
7	590198520100		SCREW HEX HD M8×25	2		
8	590198520150		SCREW HEX HD M8×35	2		
9	590198520067		NUT HEX SELF LOCKING M6	2		
10	590198520152		SPACE	2		
11	590198520133		REAR WHEEL	2		
12	590198520151		SCREW HEX HD M6×55	2		
13	590198520149		SCREW M8×30	1		
14	590198520137		BLADE FRONT RUBBER	1		
14	590198520161		BLADE FRONT NR	1		OPTIONAL
14	590198520165		BLADE FRONT PU	1		OPTIONAL
15	590198520117		WASHER FLAT D8×D16×1	2		
16	590198520066		NUT HEX SELF LOCKING M8	2		
17	590198520053		RUBBER WASHER	2		
18	590198520132		HANDLE	2		
19	590398510012		SQUEEGEE ASSEMBLY	1		

06 Solution assembly (590346021506)

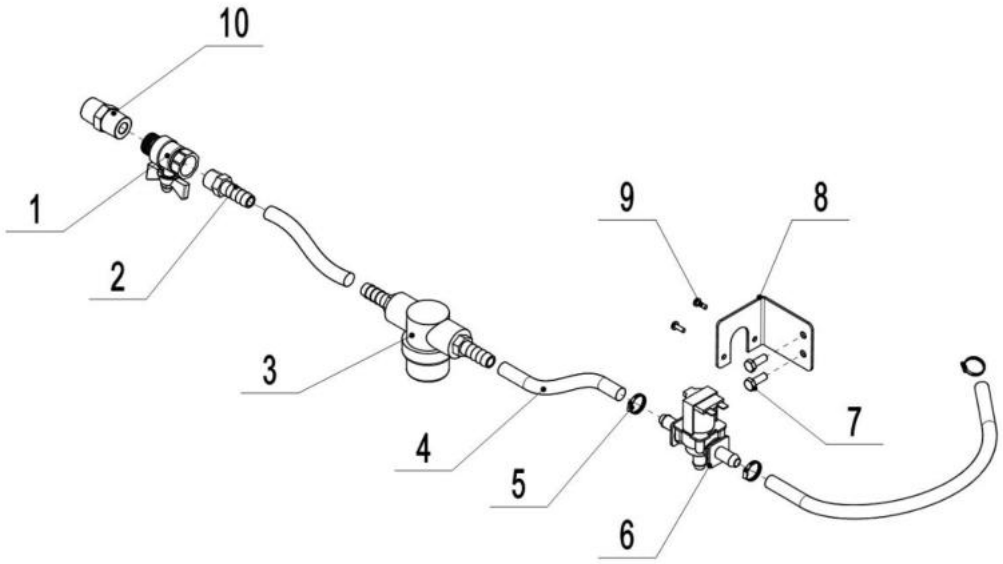

590346021506

1= Supply as package. 2= Supply with constraints. 3= Phasing-out supply. 4= Supply as assembly. 5= Check other tables.

06 Solution assembly (590346021506)

No.	Item Code	Mark	Item Description	Qty.	Substitute	Note
1	590198520147		SOLUTION TAP	1		
2	590198520009		CONNECTOR 2-12	1		
3	590198520134		FILTER	1		
4	590198520062		HOSE 12	0.8		0.8m
5	590198520096		HOSE CLAMP D13-19	6		
6	590198520140		SOLENOID VALVE 24V	1		
7	590198520083		SCREW HEX HD M6×16	2		
8	590398520014		HOLDER	1		
9	590198520092		SCREW CYL HD M4×10	2		
10	590398520068		CONNECTOR 2-2	1		

07 Wheels (590346017001)

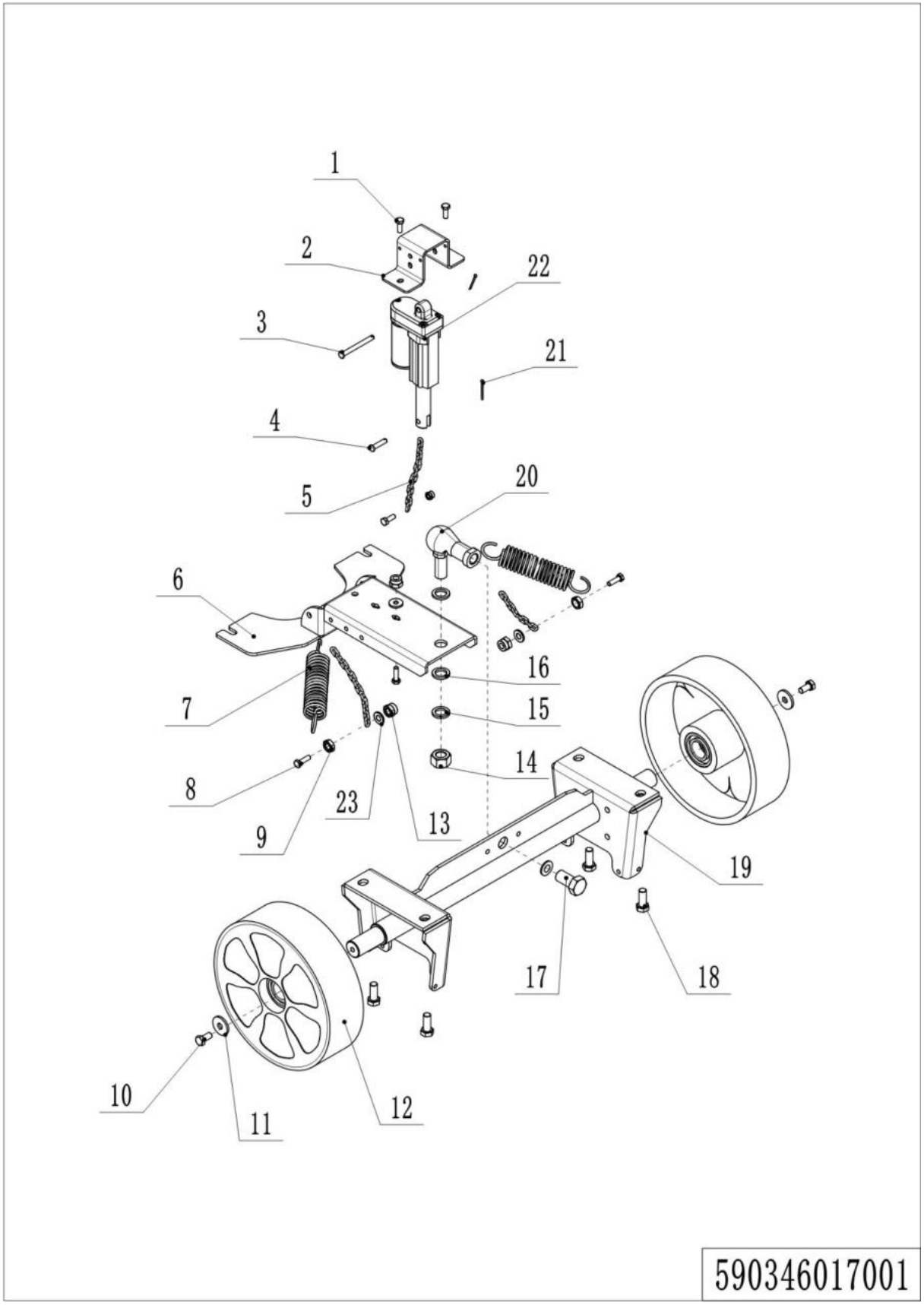

1= Supply as package. 2= Supply with constraints. 3= Phasing-out supply. 4= Supply as assembly. 5= Check other tables.

07 Wheels (590346017001)

No.	Item Code	Mark	Item Description	Qty.	Substitute	Note
1	590198520142		SCREW M6×16 W WASHER	2		
2	590398520027		HOLDER	1		
3	590398520060		SHAFT 6×55	1		
4	590398520059		SHAFT 6×25	1		
5	590398520070		CHAIN	0.6		0.6m
6	590398520026		HOLDER FOR SQUEEGEE	1		
7	590398520071		SPRING	2		
8	590198520084		SCREW HEX HD M6×20	4		
9	590198520071		NUT M6	4		
10	590198520069		SCREW M8×20 W WASHER	2		
11	590398520002		WASHER D8×D30×2.5	2		
12	590398520011		WHEEL D225×65	2		
13	590198520067		NUT HEX SELF LOCKING M6	4		
14	590398520063		NUT M16	1		
15	590398520086		WAHSER SPLIT M16	2		
16	590398520053		WASHER FLAT Ø16	2		
17	590398520058		SCREW HEX HD M16×25	1		
18	590398520050		SCREW M10×20 W WASHER	4		
19	590398520025		HOLDER W WHEEL SHAFT	1		
20	590398520066		BALL BARING M16	1		
21	590398520069		SPLIT PIN	2		
22	590398510011		REAR PUSH MOTOR	3		

Chapter 2： Electrical parts

01 Operating panel (590346010001)

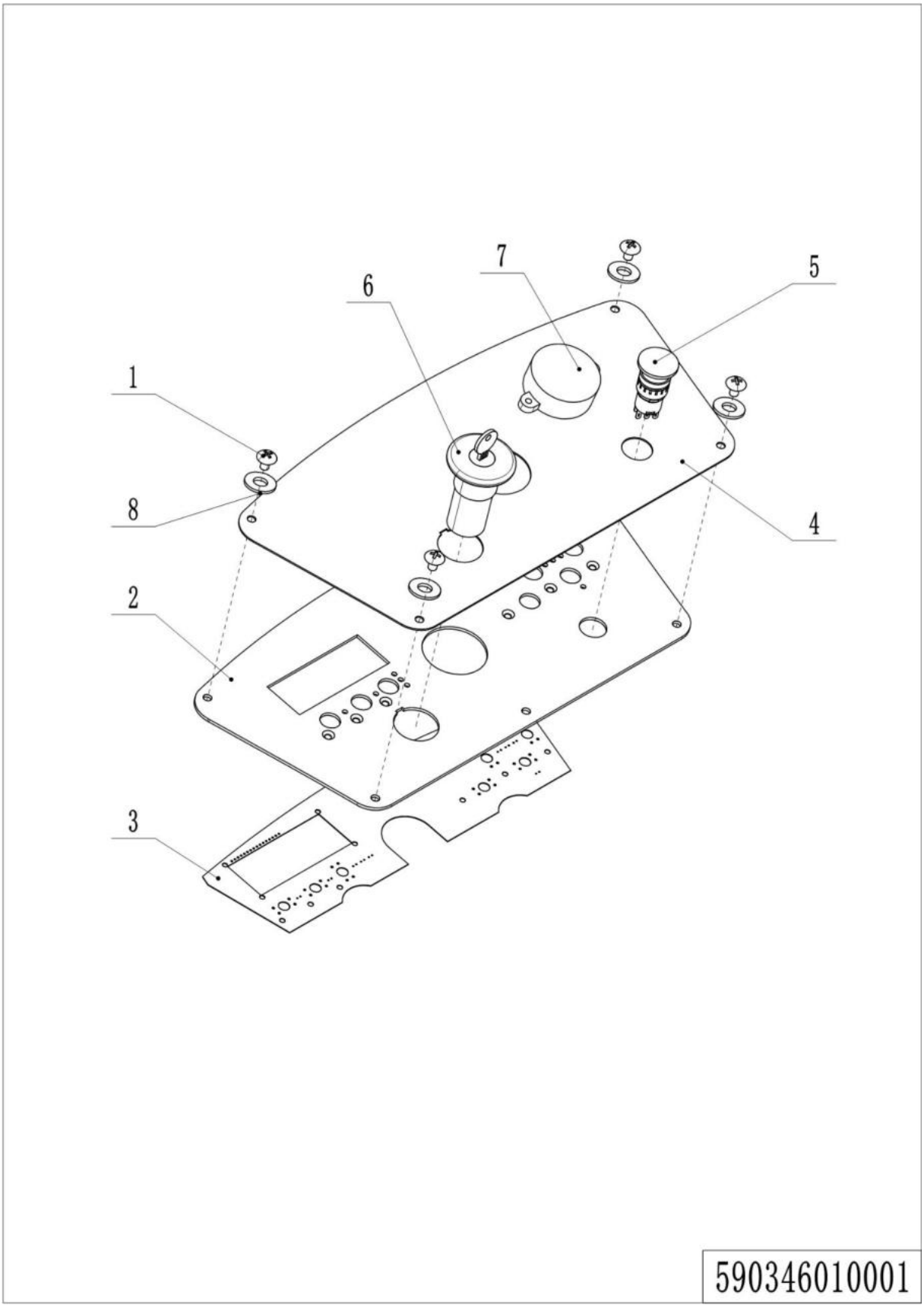

1= Supply as package. 2= Supply with constraints. 3= Phasing-out supply. 4= Supply as assembly. 5= Check other tables.

01 Operating panel (590346010001)

No.	Item Code	Mark	Item Description	Qty.	Substitute	Note
1	590198520091		SCREW CYL HD M5×12	4		
2	590398520031		CONTROL PANEL	1		
3	590398520047		PCB CONTROL PANEL	1		
4	590398520003		DECAL	1		
5	590398510008		EMERGENCY SWITCH	1		
6	590398510004		START SWITCH WITH KEY	1		
7	590398520091		BUZZER	1		
8	590198520195		WASHER FLAT D5×D10	1		

02 Electronic control components (590346033001)

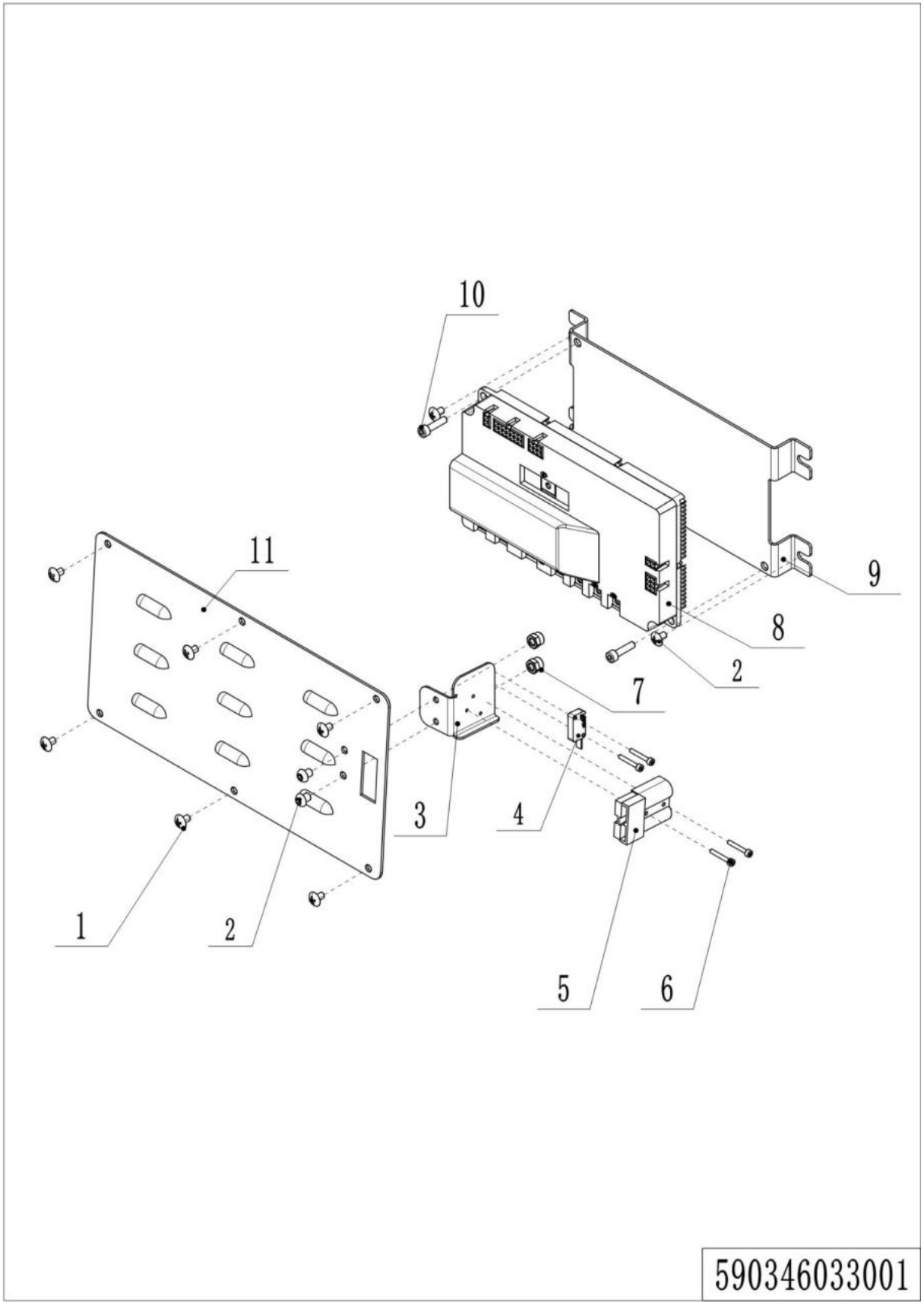

1= Supply as package. 2= Supply with constraints. 3= Phasing-out supply. 4= Supply as assembly. 5= Check other tables.

02 Electronic control components (590346033001)

No.	Item Code	Mark	Item Description	Qty.	Substitute	Note
1	590198520182		SCREW CYL HD M5×8	6		
2	590198520093		SCREW CYL HD M5×12	4		
3	590398520032		HOLDER	1		
4	509198520183		MICROSWITCH	1		
5	590198520141		CHARGER CONNECTOR	1		
6	590398520078		SCREW CYL HD M3×20	4		
7	590198520068		NUT HEX SELF LOCKING M5	2		
8	590398510003		ELECTRIC BOARD	1		
9	590398520035		HOLDER	1		
10	590398520079		SCREW CYL HD M6×20	2		
11	590398520028		COVER	1		

03 Traction Battery (590346037001)

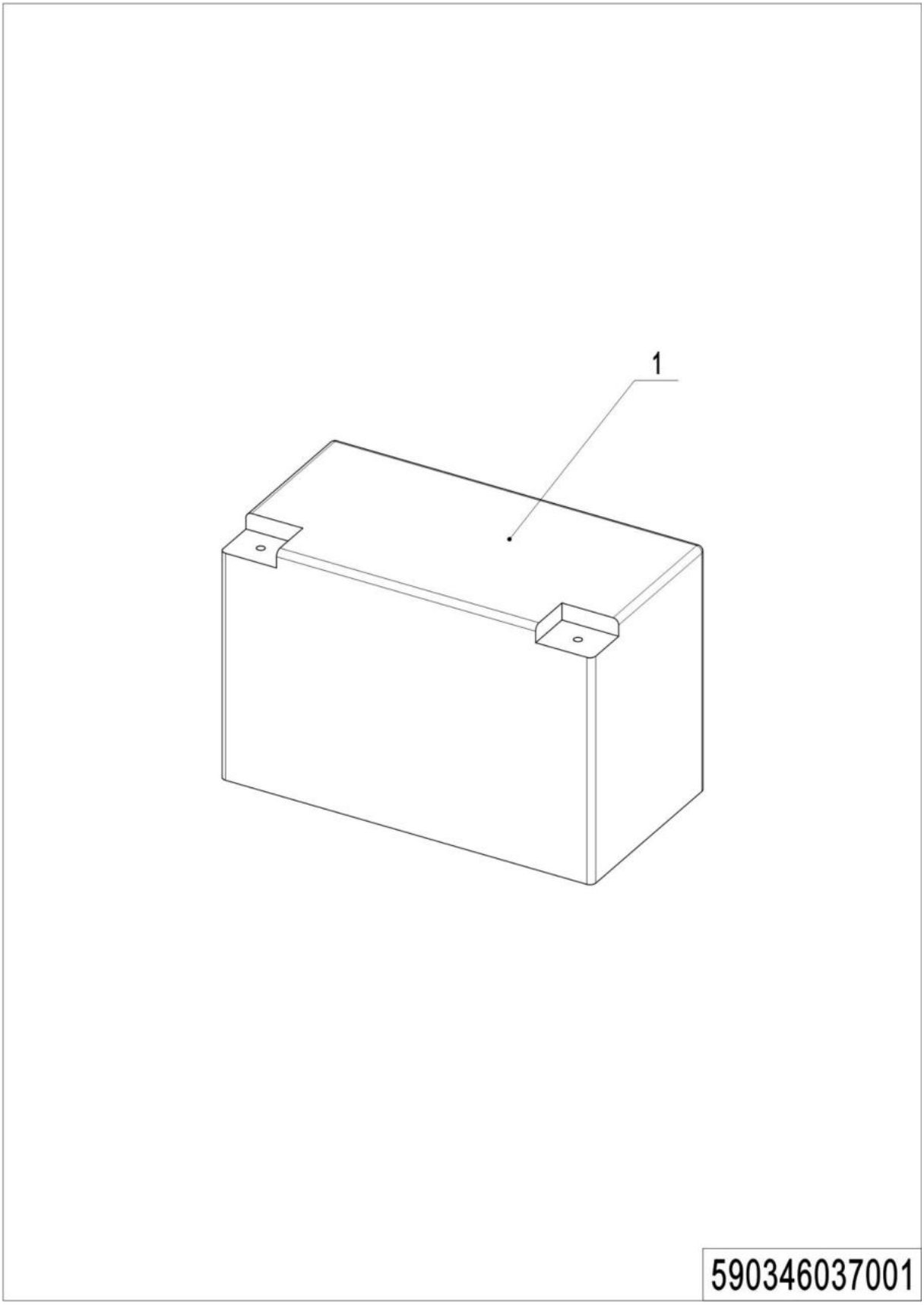

1= Supply as package. 2= Supply with constraints. 3= Phasing-out supply. 4= Supply as assembly. 5= Check other tables.

03 Traction Battery (590346037001)

No.	Item Code	Mark	Item Description	Qty.	Substitute	Note
1	590398520081		BATTERY 12V120AH	2		

04 Charger (590146036501)

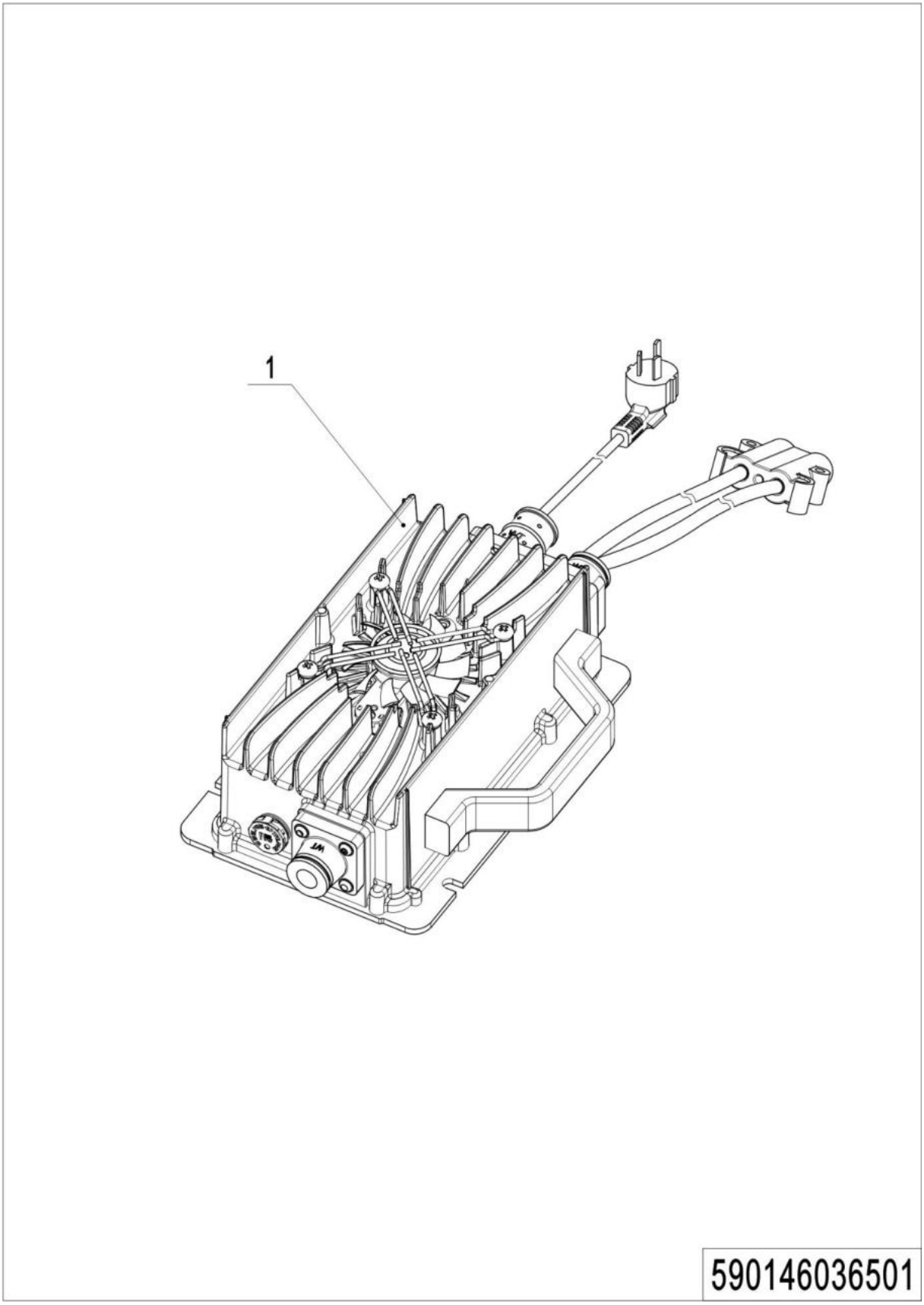

04 Charger (590146036501)

No.	Item Code	Mark	Item Description	Qty.	Substitute	Note
1	590198520155		CHARGE 24V15A(Asia)	1		
1	590198520182		CHARGE 24V15A(ENG)	1		
1	590198520183		CHARGE 24V15A(US)	1		
1	590198520184		CHARGE 24V15A(EU)	1		
1	590198520185		CHARGE 24V15A(AUS)	1		
1	590198520186		CHARGE 24V15A(ITA)	1		
1	590198520187		CHARGE 24V15A(SWE)	1		
1	590198520188		CHARGE 24V15A(ISR)	1		
1	590198520189		CHARGE 24V15A(BRA)	1		

05 Wire Harness (590346033002)

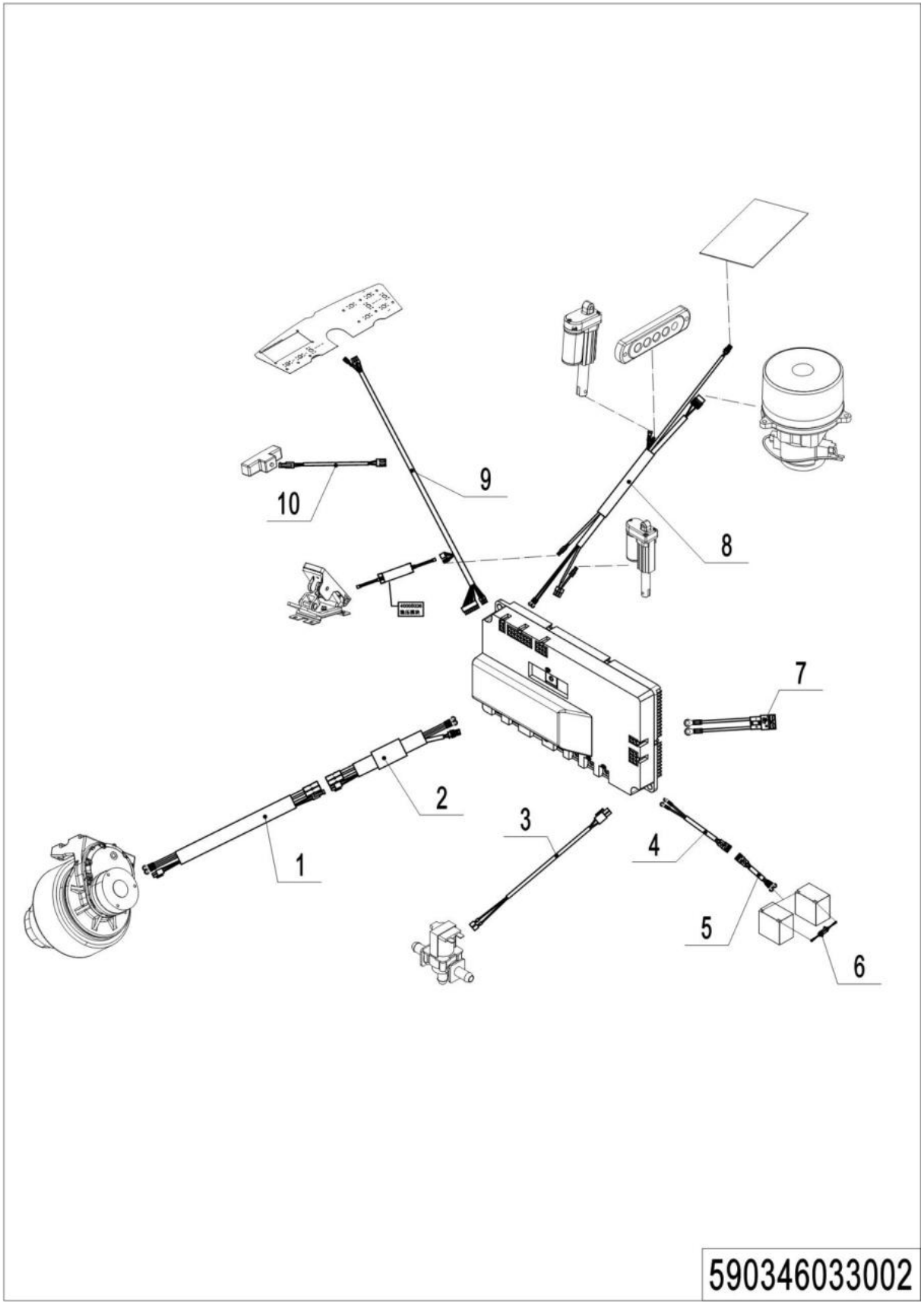

1= Supply as package. 2= Supply with constraints. 3= Phasing-out supply. 4= Supply as assembly. 5= Check other tables.

05 Wire Harness (590346033002)

No.	Item Code	Mark	Item Description	Qty.	Substitute	Note
1	590398510018		Wire Harness	1		
2	590398510013		Wire Harness	1		
3	590398510014		Wire Harness	1		
4	590398510015		Wire Harness	1		
5	590198510008		Wire Harness	1		
6	590398520101		Wire Harness	1		
7	590198520141		Wire Harness	1		
8	590398510016		Wire Harness	1		
9	590398510017		Wire Harness	1		
10	590398520100		Wire Harness	1		

Chapter 4： Others

01 Labels and decals (590346047001)

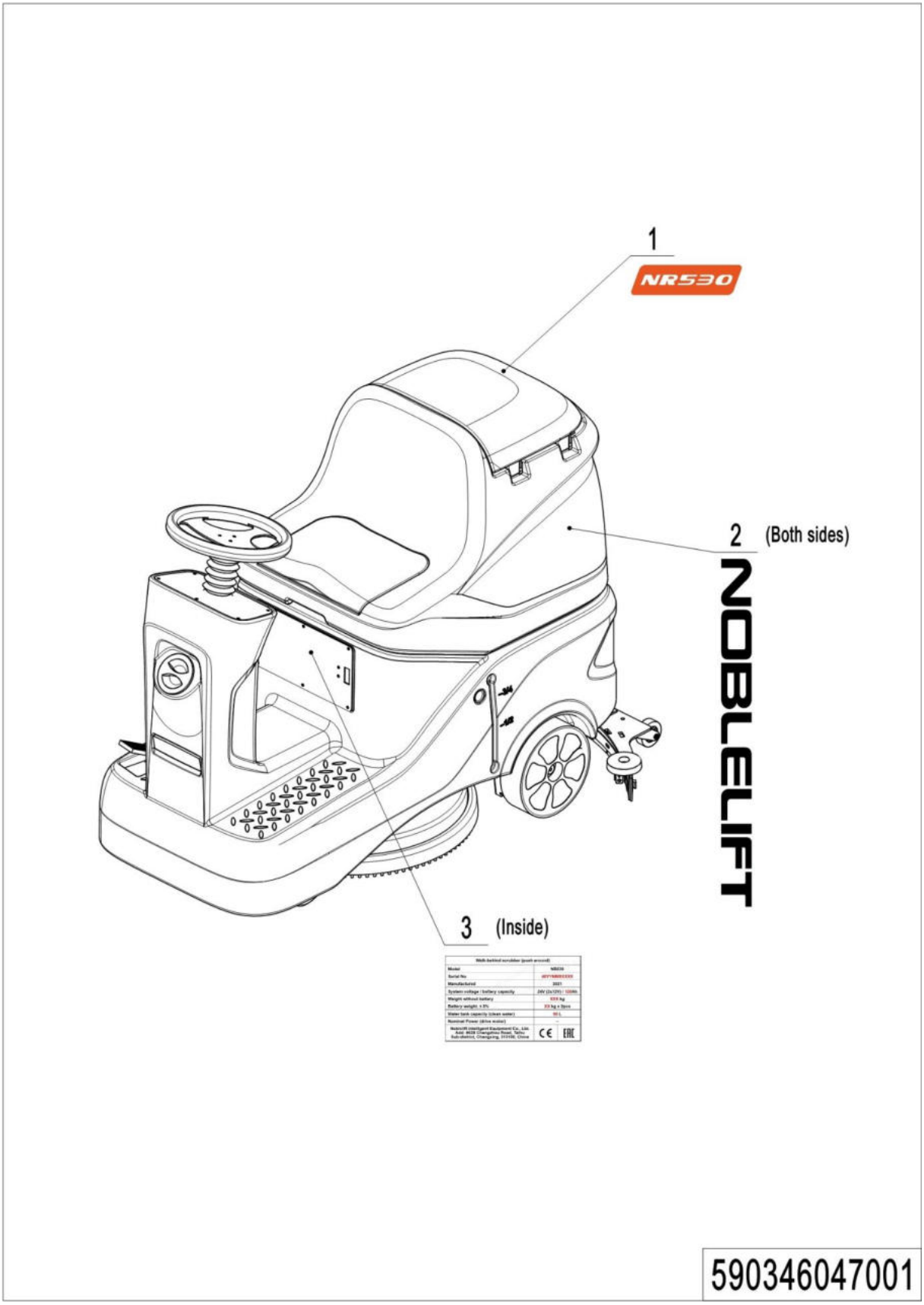

01 Labels and decals (590346047001)

No.	Item Code	Mark	Item Description	Qty.	Substitute	Note
1	590347020000		LABLE(NR530)	1		
2	590147020000		LABLE(NOBLELIFT)	2		
3	590198520167		DATA PLATE	1		

Appendix

01 Electrical Circuit Diagram (590346045501)

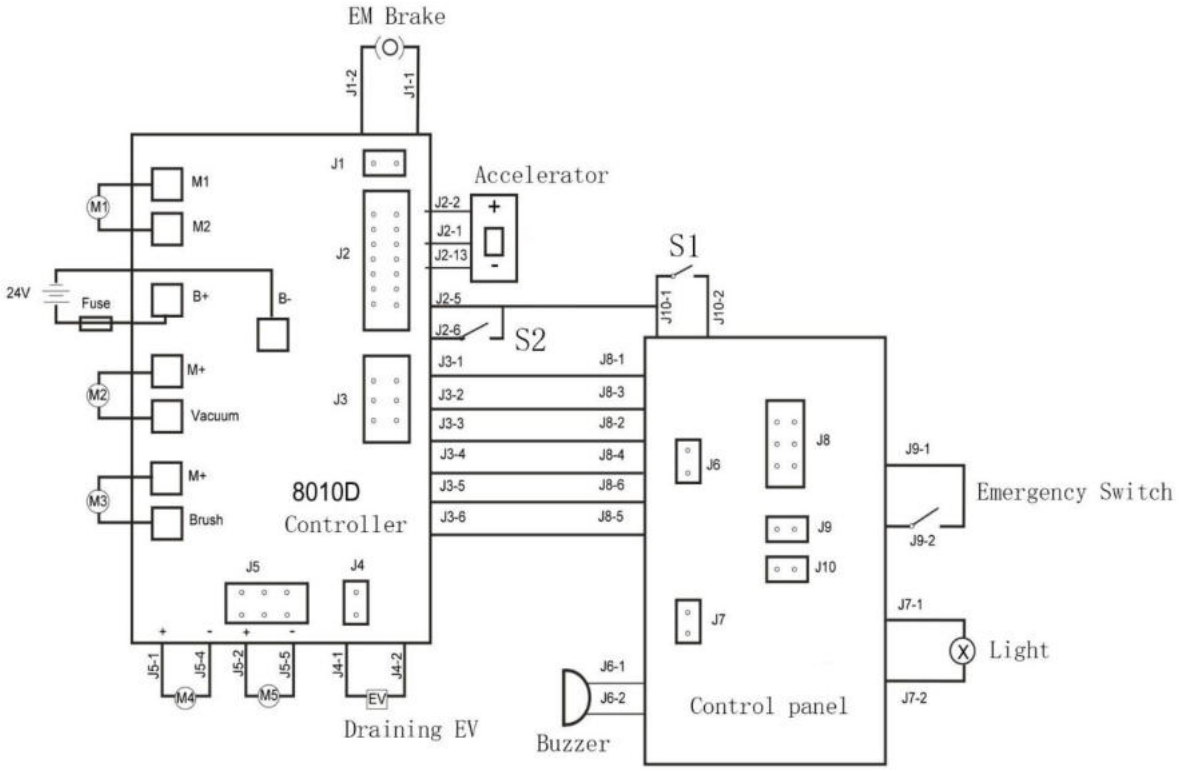

M1	Drive Motor	M5	Push Motor for Brush
M2	Vacuum Motor	S1	Key Switch
M3	Brush Motor	S2	Seat Switch
M4	Push Motor for Squeegee		

02 Easy Wornout Parts List

No.	Item Code	Item Description	Qty.	Chapter/ Section/ Number
1	590398520042	STEERING WHEEL	1	Chapter 1/01/03
2	590398510006	ACCELERATOR	1	Chapter 2/01/07
3	590398510009	LED LIGHT	1	Chapter 2/01/13
4	590398510010	ALARM LIGHT	1	Chapter 2/01/28
5	590398520043	SEAT	1	Chapter 2/02/03
6	590398510001	SENSOR FOR SEAT	1	Chapter 2/02/04
7	590398510007	VACUUM MOTOR	1	Chapter 2/02/10
8	590398520045	AVCUUM HOSE	1	Chapter 2/02/18
9	590398520046	DRAIN HOSE	1	Chapter 2/02/20
10	590198520015	FLOATING BALL	1	Chapter 2/02/23
11	590198520014	CAGE FOR FLOATING BALL	1	Chapter 2/02/24
12	590198520061	GASKET	1.3	Chapter 2/02/26
13	590198520131	WHEEL	1	Chapter 2/03/08
14	590398520004	WEATHER BAR(*)	1	Chapter 2/03/12
15	590398520083	PAD DRIVER	1	Chapter 2/03/13
16	590398510005	REDUCTION GEARMOTOR	1	Chapter 2/03/18
17	590398510002	FRONT PUSH MOTOR	1	Chapter 2/04/02
18	590198520131	WHEEL	2	Chapter 2/05/01
19	590198520133	REAR WHEEL	2	Chapter 2/05/11
20	590398510012	SQUEEGEE ASSEMBLY	1	Chapter 2/05/19
21	590198520147	SOLUTION TAP	1	Chapter 2/06/01
22	590198520134	FILTER	1	Chapter 2/06/03
23	590198520140	SOLENOID VALVE 24V	1	Chapter 2/06/06
24	590398520011	WHEEL D225×65	2	Chapter 2/07/12
25	590398510011	REAR PUSH MOTOR	1	Chapter 2/07/22
26	590398510008	EMERGENCY SWITCH	1	Chapter 3/01/05
27	590398510004	START SWITCH WITH KEY	1	Chapter 3/01/06

1= Supply as package. 2= Supply with constraints. 3= Phasing-out supply. 4= Supply as assembly. 5= Check other tables.

03 Consumable Parts List

No.	Item Code	Item Description	Qty.	Chapter/ Section/ Number
1	590398520082	BRUSH	1	Chapter 2/03/13
	590398520087	BRUSH(SOFT)	1	Chapter 2/03/13
	590398520088	BRUSH(HARD)	1	Chapter 2/03/13
2	590198520138	BLADE REAR RUBBER	1	Chapter 2/05/05
	590198520160	BLADE REAR NR	1	Chapter 2/05/05
	590198520164	BLADE REAR PU	1	Chapter 2/05/05
3	590198520137	BLADE FRONT RUBBER	1	Chapter 2/05/14
	590198520161	BLADE FRONT NR	1	Chapter 2/05/14
	590198520165	BLADE FRONT PU	1	Chapter 2/05/14
4	590198520168	WHITE PAD	1	USE WITH PAD DRIVER
	590198520169	RED PAD	1	USE WITH PAD DRIVER
	590198520170	BLACK PAD	1	USE WITH PAD DRIVER