Print Number:　　Print Date:

NOBLELIFT

Scan QR Code for More

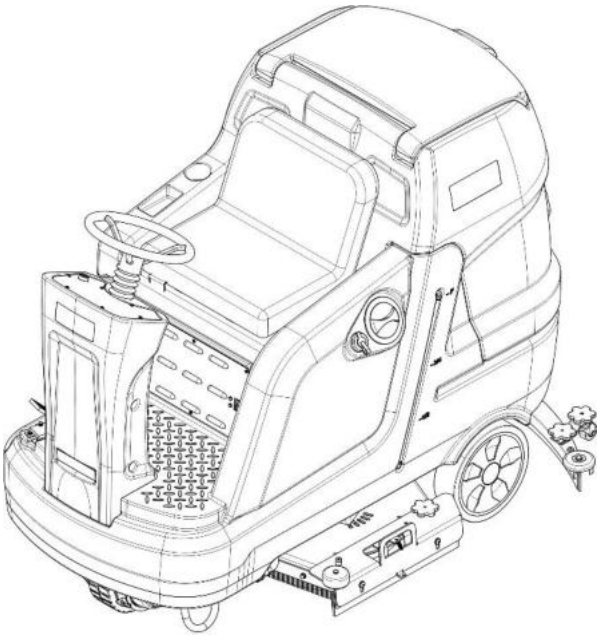

Rider scrubber

NR1060/860

Parts Manual

590746020101

Version V03

Scrubber Identification Number From:

Parts Manual NR1060-PM03EN

Please order parts from authorized dealers of our company.
In order to avoid wrong delivery, all the orders for spare parts should specify the following items:
- Truck model, identification number and manufacture year.
- Orders for spare parts of mast, hydraulic transmission unit, steering axle, motor, etc. shall indicate the manufacture number of these parts.
- Codes for our company spare parts are shown in the table of parts manual. Please also pay attention to the description of supply status, order quantity, etc. (check the number listed in "Mark" column of the parts manual).

"Mark" Column:
The unmarked indicates the parts are in short supply cycle.
Number 1: supply as package. Indicating these that parts are small parts and seal parts, which are supplied in package unit and in short supply cycle.
Number 2: supply with constraints. Indicating that these spare parts are not in stock and will be prepared for production after receiving the order from customers, which are in long supply cycle.
Number 3: phasing-out supply. Indicating that these parts will be replaced by new parts due to technical improvements and the current stock will not be available when these parts run out. Please check the description of technical improvements notice.
Number 4: supply as assembly. Indicating that these parts are assembly parts defined by manufacture process, which cannot be supplied as a single part.
Number 5: check other tables.
This parts manual is the property of our company and can be shared under the confidential agreement only, our company has the right to claim for compensation of any unauthorized use. Copy without permission is not allowed. Figures in the manual are not limited by the original design. our company reserves the right to improve the products for continuous technology progress.

Table of Contents

Chapter 1: Drive system 1
01 Drive unit (590746013501) 1
Chapter 2：Truck Frame 3
01 Solution tank (590746021501) 3
01 Solution tank (590746021501) Continue 5
02 Recovery tank (590746021502) 7
03 Frame (590746017001) 9
04 Brush system (590746021503) 11
04 Brush system (590746021503) continue 13
05 Squeegee system (590746021504) 15
06 Retaining edge (590746021505) 17
07 Solution assembly (590746021506) 19
08 Wiper frame (590746017002) 21
09 Front body (590746021507) 23
Chapter 3：Electrical parts 25
01 Electronic control components (590746033001) 25
02 Traction Battery (590746037001) 27
03 Charger (590746036501) 29
04 Wire Harness (590746033002) 31
Chapter 4: Others 33
01 Labels and decals (590746047001) 33
02 Labels and decals (590746047002) 35
Appendix 37
01 Electrical Circuit Diagram (590746045501) 37
02 Easy Wornout Parts List 38
03 Consumable Parts List 39

Chapter 1: Drive system

01 Drive unit (590746013501)

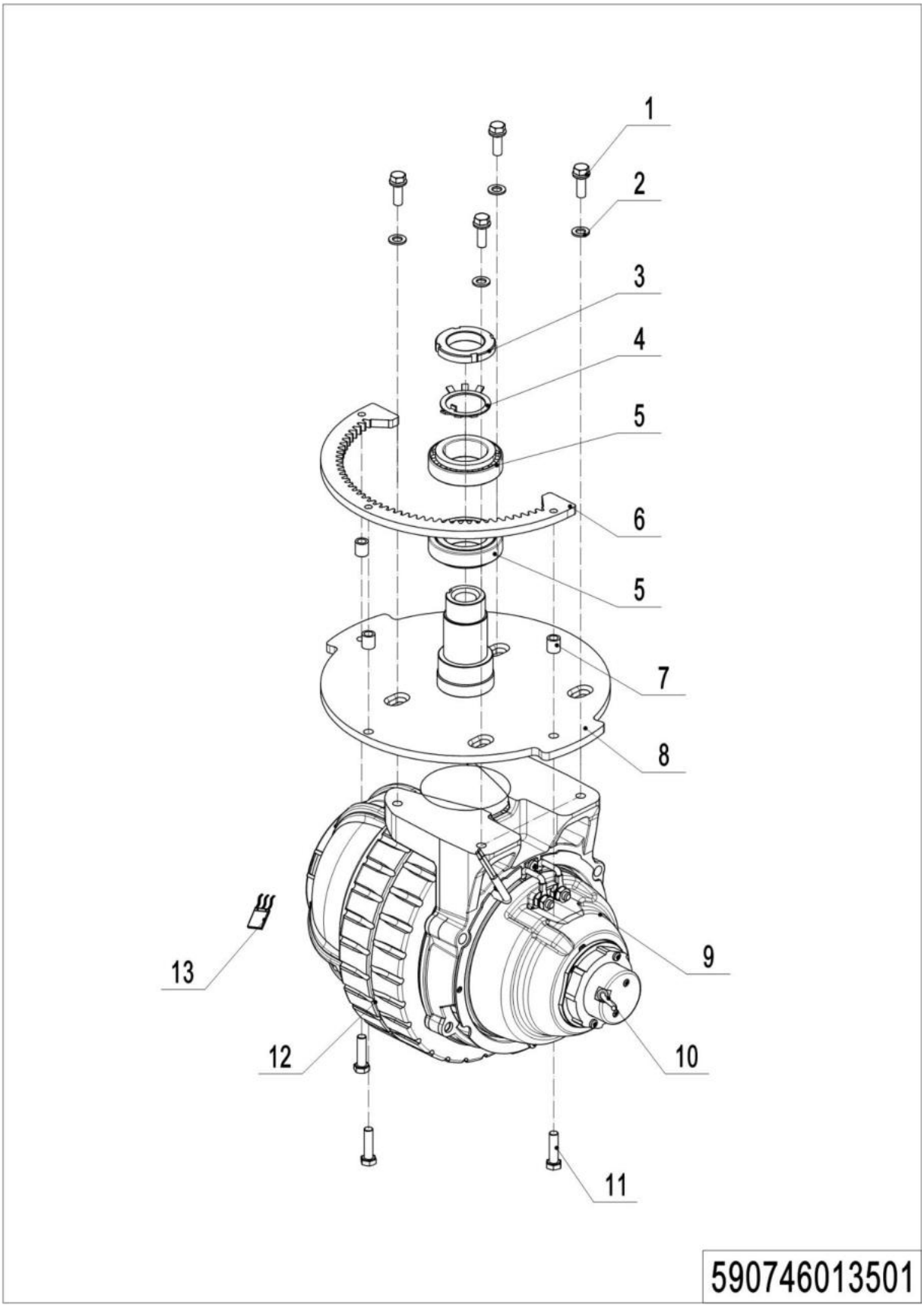

1= Supply as package. 2= Supply with constraints. 3= Phasing-out supply. 4= Supply as assembly. 5= Check other tables.

01 Drive unit（590746013501）

No.	Item Code	Mark	Item Description	Qty.	Substitute	Note
1	590198520181		SCREW M10x30 W WASHER	4		
2	590198520073		WASHER SPLIT M10 SS	4		
3	590398520065		NUT M36x1.5	1		
4	590398520054		WASHER M36	1		
5	590398520075		BEARING	2		
6	590798520029		GEAR RING	1		
7	590798520055		SPACER	3		
8	590798520022		SUPPORT FOR DRIVE MOTOR	1		
9	590798510000		DRIVE MOTOR	1		
10	590798520136		BRAKE	1		
11	590198520145		SCREW HEX HD M8x30	3		
12	590798520134		WHEEL RING 250	1		
13	590798520131		CARBON BRUSH	1		

Chapter 2： Truck Frame

01 Solution tank (590746021501)

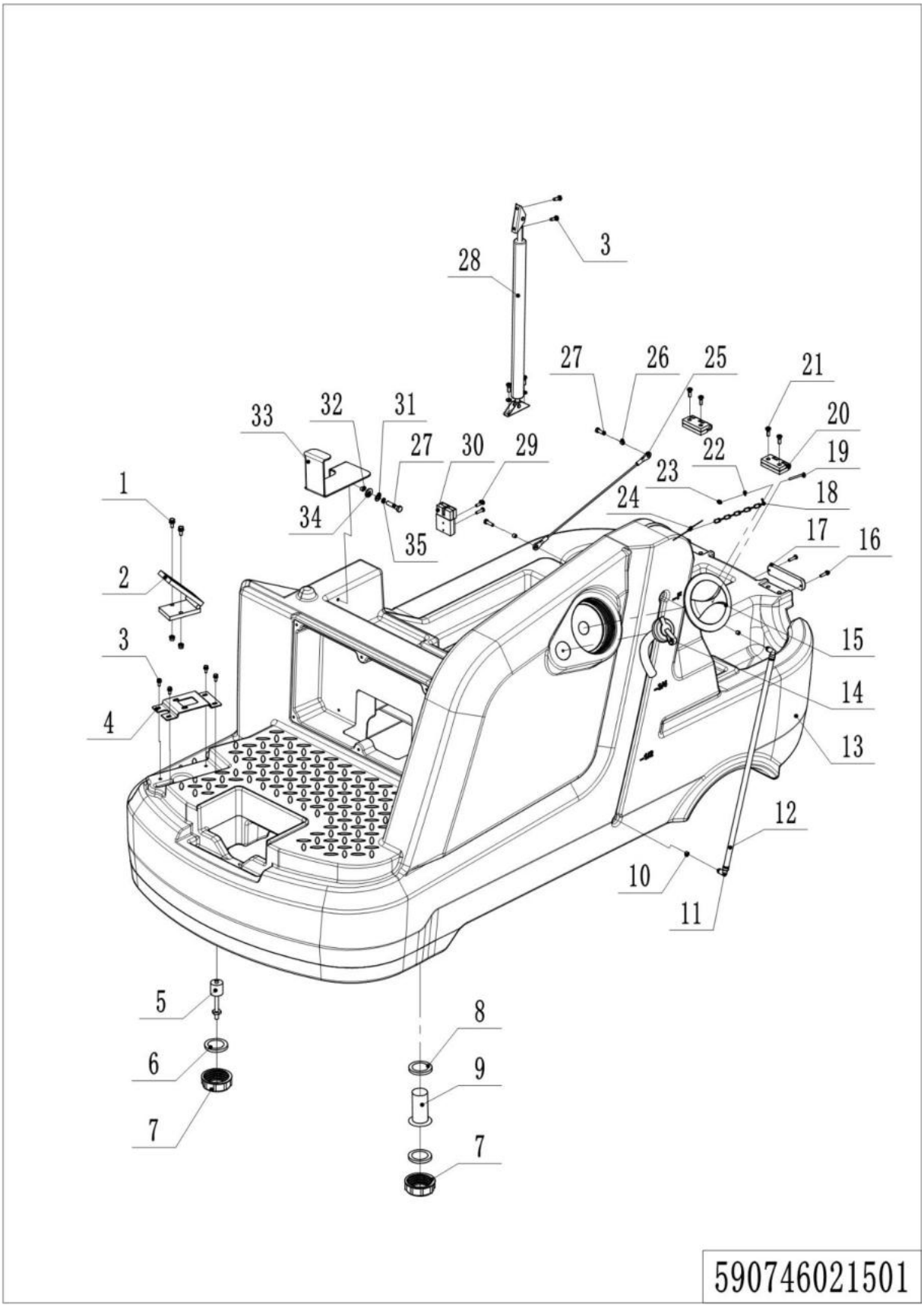

01 Solution tank（590746021501）

No.	Item Code	Mark	Item Description	Qty.	Substitute	Note
1	590198520104		SCREW SOCKET HD M8×16	2		
2	590798510004		ACCELERATOR	1		
3	590198520142		SCREW M6x16 W WASHER	8		
4	590798520026		FIXED PLATE	1		
5	590798510009		CLEAN WATER TANK SENSOR	1		
6	590798520126		RUBBER INSERT 42x46x2	2		
7	590798520008		COVER	2		
8	590798520127		RUBBER INSERT 42x56x3	1		
9	590798520004		FILTER	1		
10	590198520136		RUBBER PLUG	2		
11	590198520128		L CONNECTOR 8	2		
12	590198520139		HOSE 8	0.6m		
13	590798520009		SOLUTION TANK	1		
14	590498520053		HOSE FOR WATER INJECTION	1		
15	590798520007		COVER	1		
16	590198520092		SCREW CYL HD M4x10	2		
17	590398510010		ALARM LIGHT	1		
18	590398520095		CHAIN	1		
19	590198520101		SCREW PAN HD M3×25	1		
20	590798520052		HINGE	2		
21	590198520104		SCREW SOCKET HD M8×16	8		
22	590198520190		WASHER FLAT D3xD9	1		
23	590198520102		NUT HEX SELF LOCKING M3	1		
24	590798520124		YORSION SPRING	1		
25	590798520057		CABLE	1		
26	590398520074		SPACER	2		
27	590198520083		SCREW SOCKET HD M6x16	2		
28	590798520051		GAS SPRING	1		
29	590498520082		SCREW CYL HD M5x30	2		
30	590798510020		MAIN POWER CORD	1		

01 Solution tank (590746021501) Continue

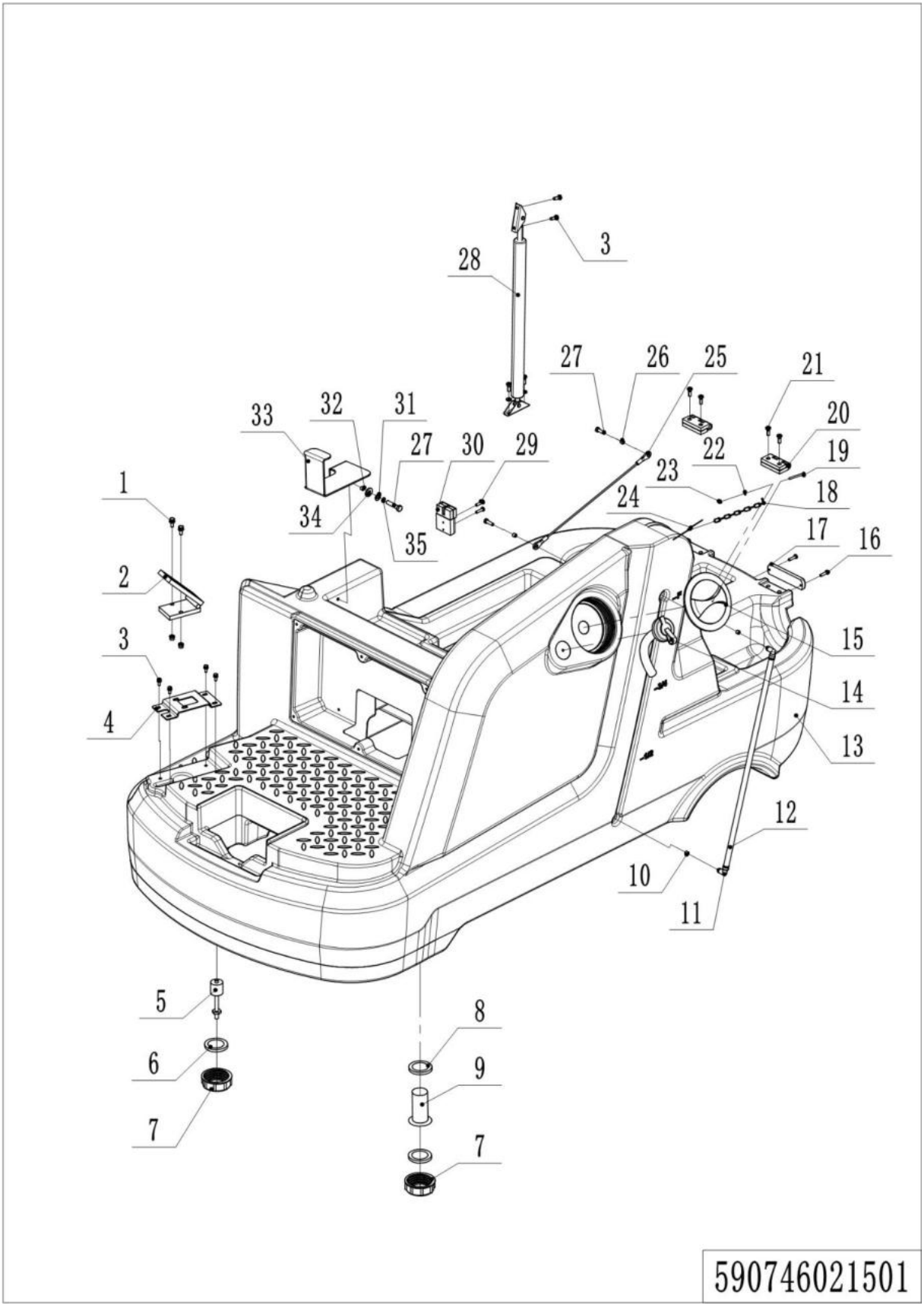

01 Solution tank (590746021501) Continue

No.	Item Code	Mark	Item Description	Qty.	Substitute	Note
31	590198520079		WASHER FLAT D6xD18	1		
32	590198520038		SPACER D6.5×D10×5	1		
33	590798520030		SUPPORT FRAME	1		
34	590198520081		WAHSER FLAT D10xD20x2.5	1		
35	590198520075		WASHER SPLIT M6 SS	1		

02 Recovery tank (590746021502)

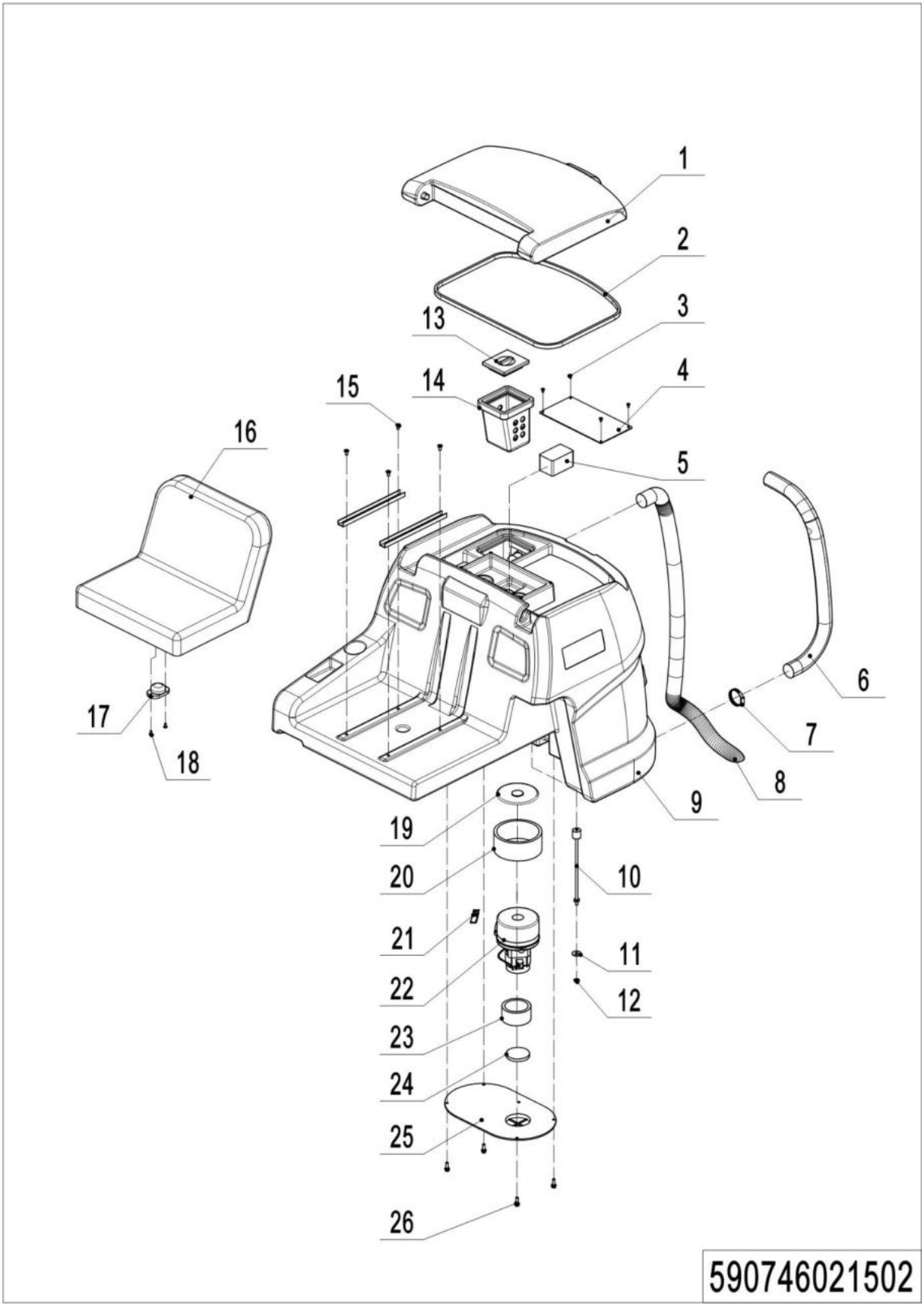

02 Recovery tank（590746021502）

No.	Item Code	Mark	Item Description	Qty.	Substitute	Note
1	590798520012		RECOVERY TANK COVER	1		
2	590198520061		GASKET	1.9m		
3	590398520090		SELF TAPPING SCREW	6		
4	590798520033		BAFFLE	1		
5	590798520037		FILTER COTTON	1		
6	590798520041		DRAIN HOSE	1		
7	590798520053		HOSE CLAMP D46-70	1		
8	590798520042		DIRT SUCTION PIPE	1		
9	590798520010		RECOVERY TANK	1		
10	590798510008		SEWAGE TANK SENSOR	1		
11	590198520080		WASHER FLAT D10xD30x2.5	2		
12	590798520059		NUT M10	1		
13	590798520006		BOX COVER	1		
14	590798520005		GARBAGE FILTER BOX	1		
15	590198520104		SCREW SOCKET HD M8×16	4		
16	590798520038		CHAIR	1		
17	590798510012		SEAT SWITCH	1		
18	590798520085		SELF TAPPING SCREW	2		
19	590198520054		GASKET	1		
20	590198520056		ACOUSTIC INSULATION PIPE	1		
21	590798520132		CARBON BRUSH	1		
22	590798510003		VACUUM MOTOR	1		
23	590198520057		GASKET	1		
24	590198520058		FILTER FOAM	1		
25	590798520028		FIXED PLATE	1		
26	590198520142		SCREW M6x16 W WASHER	6		

03 Frame (590746017001)

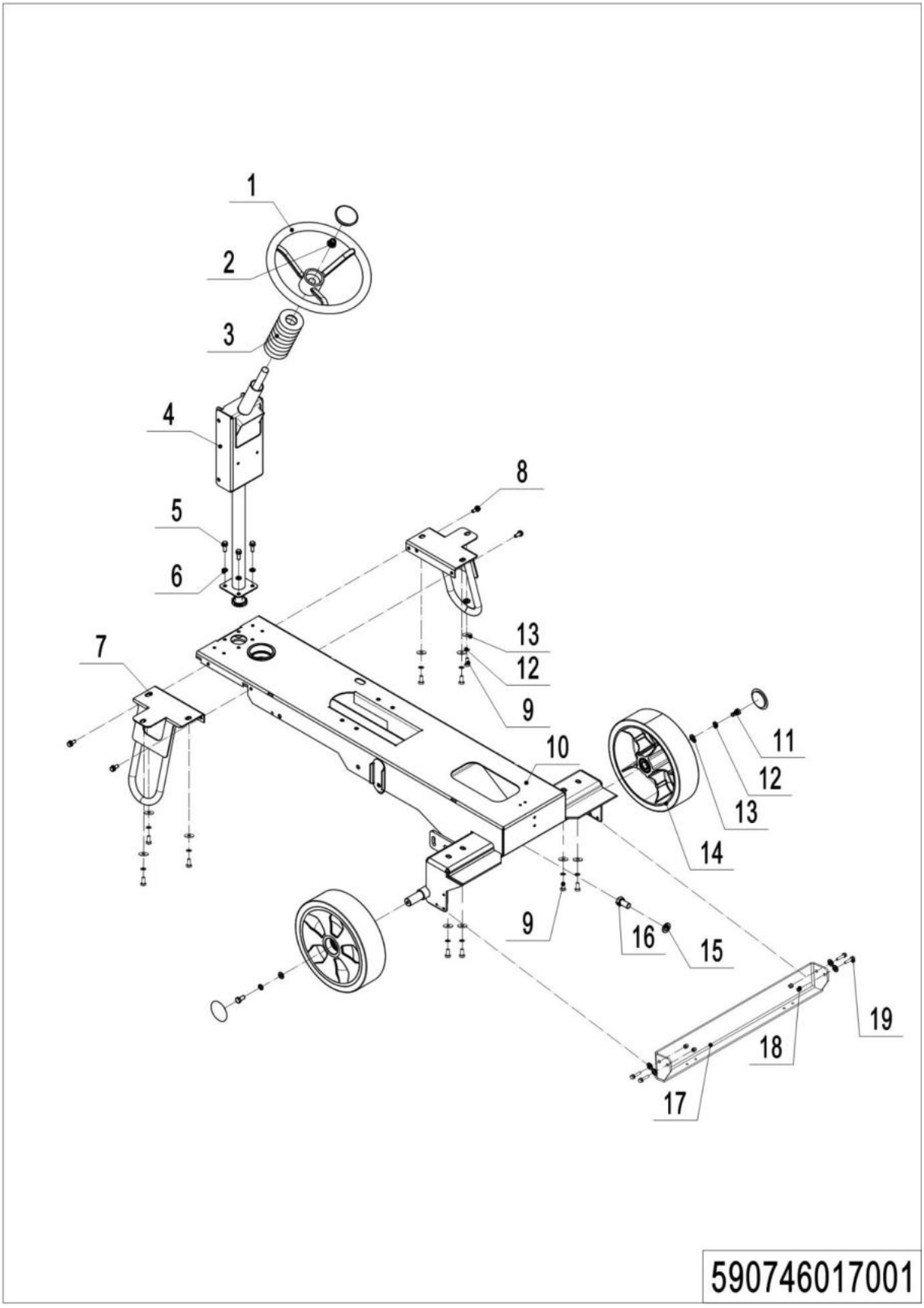

03 Frame（590746017001）

No.	Item Code	Mark	Item Description	Qty.	Substitute	Note
1	590798520039		STEERING WHEEL COVER	1		
2	590798520058		NUT M16	1		
3	590798520040		RUBBER	1		
4	590798520036		STEERING MECHANISM	1		
5	590398520049		SCREW M8×25 W WASHER	4		
6	590198520081		WAHSER FLAT	4		
7	590798520031		BRACKET	1		
8	590198520069		SCREW M8x20 W WASHER	4		
9	590198520086		SCREW HEX HD M10×20	10		
10	590798520016		FRAME	1		
11	590198520126		SCREW HEX HD M10×25	2		
12	590198520073		WASHER SPLIT M10 SS	12		
13	590198520080		WASHER FLAT	12		
14	590798520014		REAR WHEEL	2		
15	590398520086		WAHSER SPLIT M16	1		
16	590398520058		SCREW HEX HD M16x25	1		
17	590798520125		STERN FRAME	1		
18	590198520067		NUT HEX SELF LOCKING	4		
19	590398520048		SCREW M6x20 W WASHER	4		

04 Brush system (590746021503)

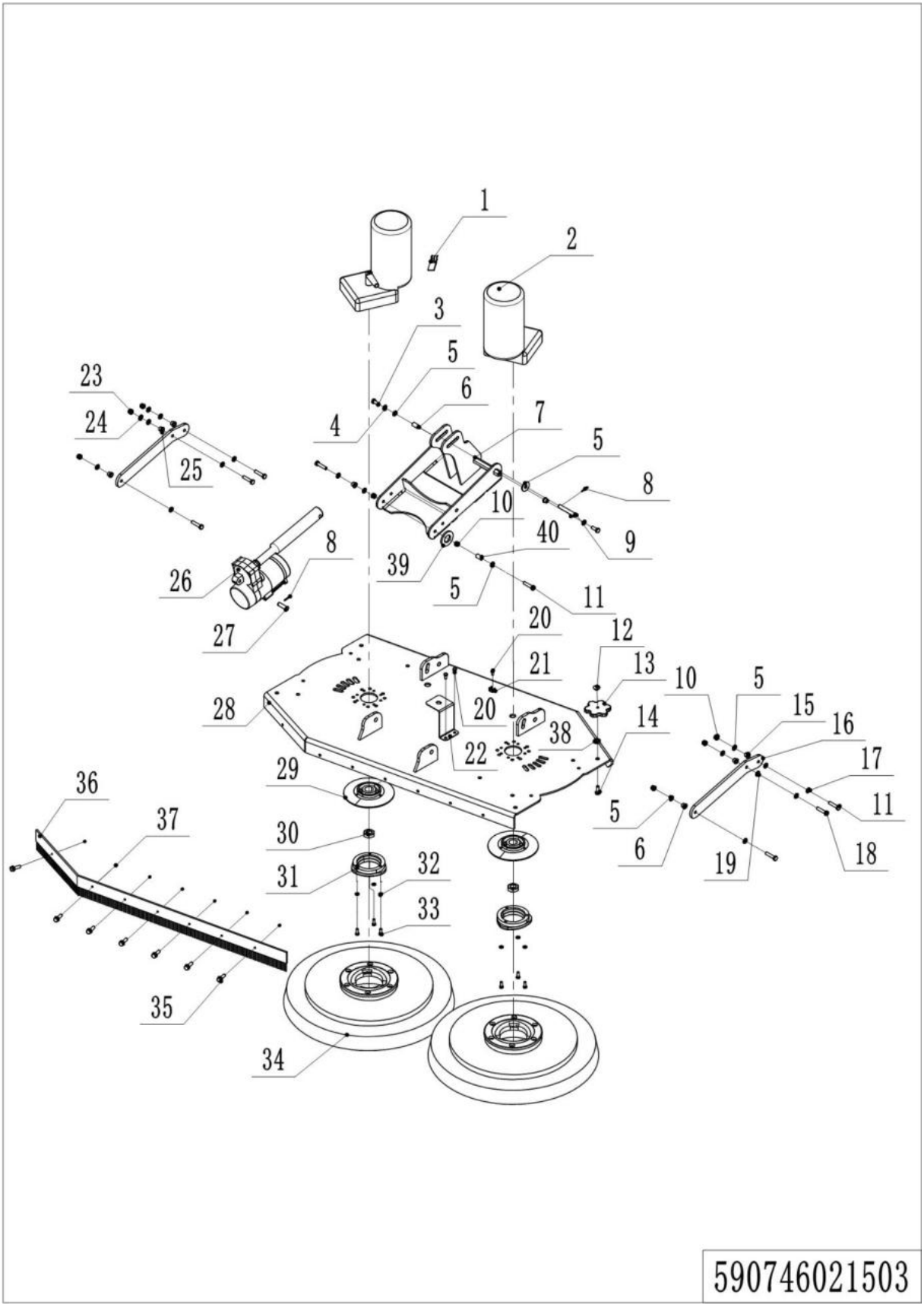

04 Brush system（590746021503）

No.	Item Code	Mark	Item Description	Qty.	Substitute	Note
1	590798520135		CARBON BRUSH	2		
2	590798510005		REDUCTION GEARMOTOR	2		
3	590198520181		SCREW M10x30 W WASHER	2		
4	590198520073		WASHER SPLIT M10 SS	2		
5	590198520080		WASHER FLAT D10xD30x2.5	3		
6	590798520118		SPACER D10xD16x10	2		
7	590798520025		LIFT HOLDER	1		
8	590198520180		SPLIT PIN 3	2		
9	590798520045		SHAFT 10x65	1		
10	590198520065		NUT HEX SELF LOCKING M10	6		
11	590798520120		SHOULDER SCREW 12x20	6		
12	590798520123		WATERPROOF COVER	2		
13	590198520132		HANDLE	2		
14	590198520150		SCREW HEX HD M8x35	2		
15	590198520017		SPACER	6		
16	590798520024		CONNNECTION ROD	2		
17	590398520085		WASHER FLAT D12xD24x2.5	4		
18	590198520145		SCREW HEX HD M8x30	2		
19	590198520028		WASHER D12×24×2	6		
20	590198520091		SCREW CYL HD M5x12	4		
21	590198520095		FLAT TIE HOLDER	2		
22	590498520031		HOLDER FOR SOLENOID	1		
23	590198520066		NUT HEX SELF LOCKING M8	2		
24	590198520109		WASHER D8×D24×2	2		
25	590798520121		SPACER D8xD12x10	2		
26	590798510001		FRONT PUSH MOTOR	1		
27	590798520046		SHAFT 10x55	1		
28	590798520015		BRUSH DISC COVER	1		Use in NR1060
28	590798520078		BRUSH DISC COVER	1		Use in NR860P
29	590198520045		COUPLING JK	2		

04 Brush system (590746021503) continue

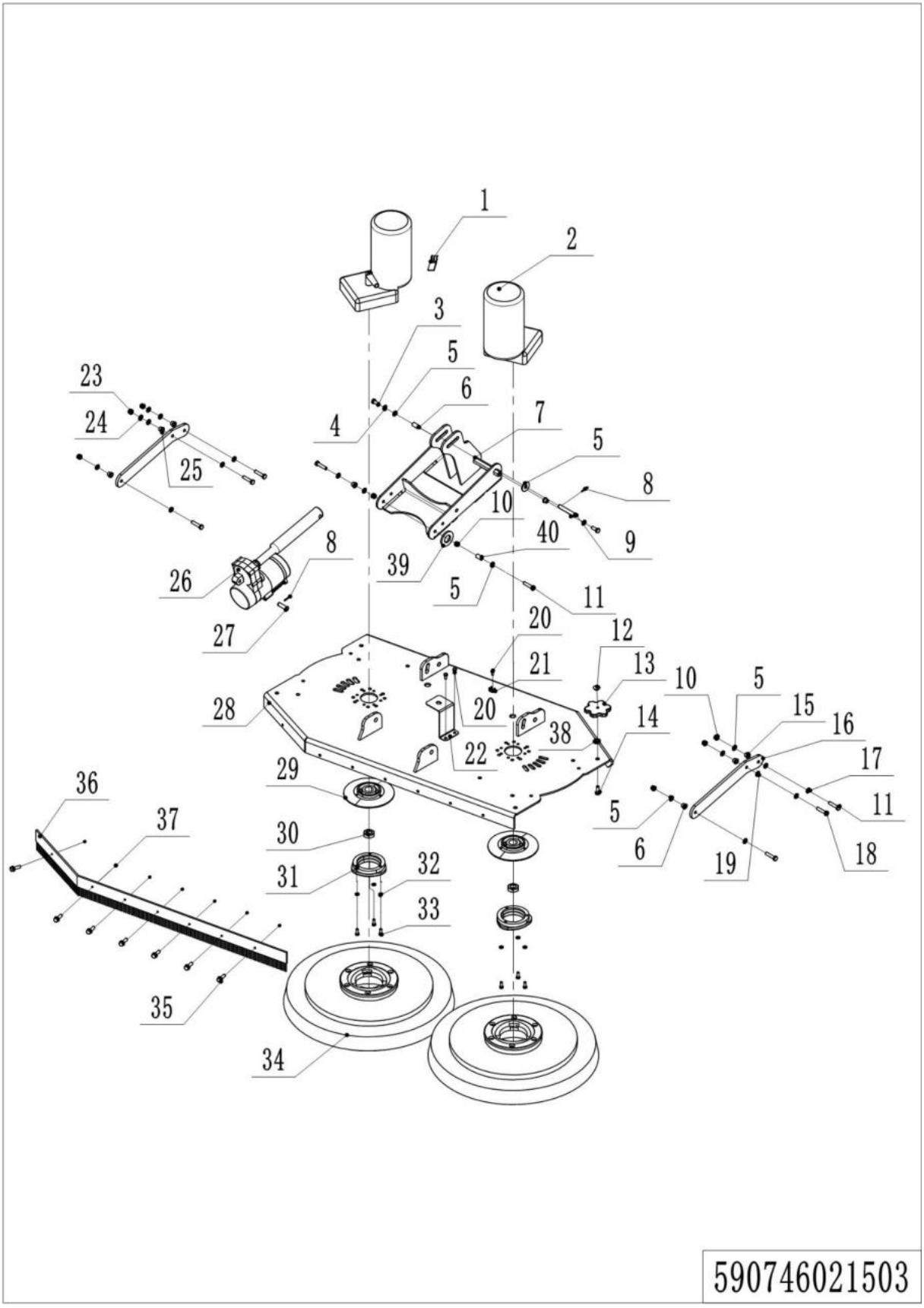

04 Brush system（590746021503）continue

No.	Item Code	Mark	Item Description	Qty.	Substitute	Note
30	590398520064		NUT M20x1.5	2		
31	590198520010		BRUSH HOLDER	2		
32	590198520075		WASHER SPLIT M6 SS	3		
33	590198520087		SCREW SOCKET HD M6x20	3		
33	590398520092		BRUSH	2		Use in NR1060
33	590398520093		MAGNETIC PAD	2		Use in NR1060
33	590798520110		BRUSH(SOFT)	2		NR1060 PTIONAL
34	590798520111		BRUSH(HARD)	2		NR1060 PTIONAL
34	590798520074		BRUSH	2		Use in NR860
34	590798520075		MAGNETIC PAD	2		Use in NR860P
34	590798520112		BRUSH(SOFT)	2		NR860P OPTIONAL
34	590798520113		BRUSH(HARD)	2		NR860P OPTIONAL
35	590198520142		SCREW M6x16 W WASHER	7		
36	590798520002		BRUSH STRIP	1		Use in NR1060
36	590798520077		BRUSH STRIP	1		Use in NR860P
37	590198520067		NUT HEX SELF LOCKING M6	7		
38	590398520098		NUT M8	1		
39	590798520128		SPACER D12xD16x10	2		
40	590398520053		WASHER FLAT Ø16	2		

05 Squeegee system (590746021504)

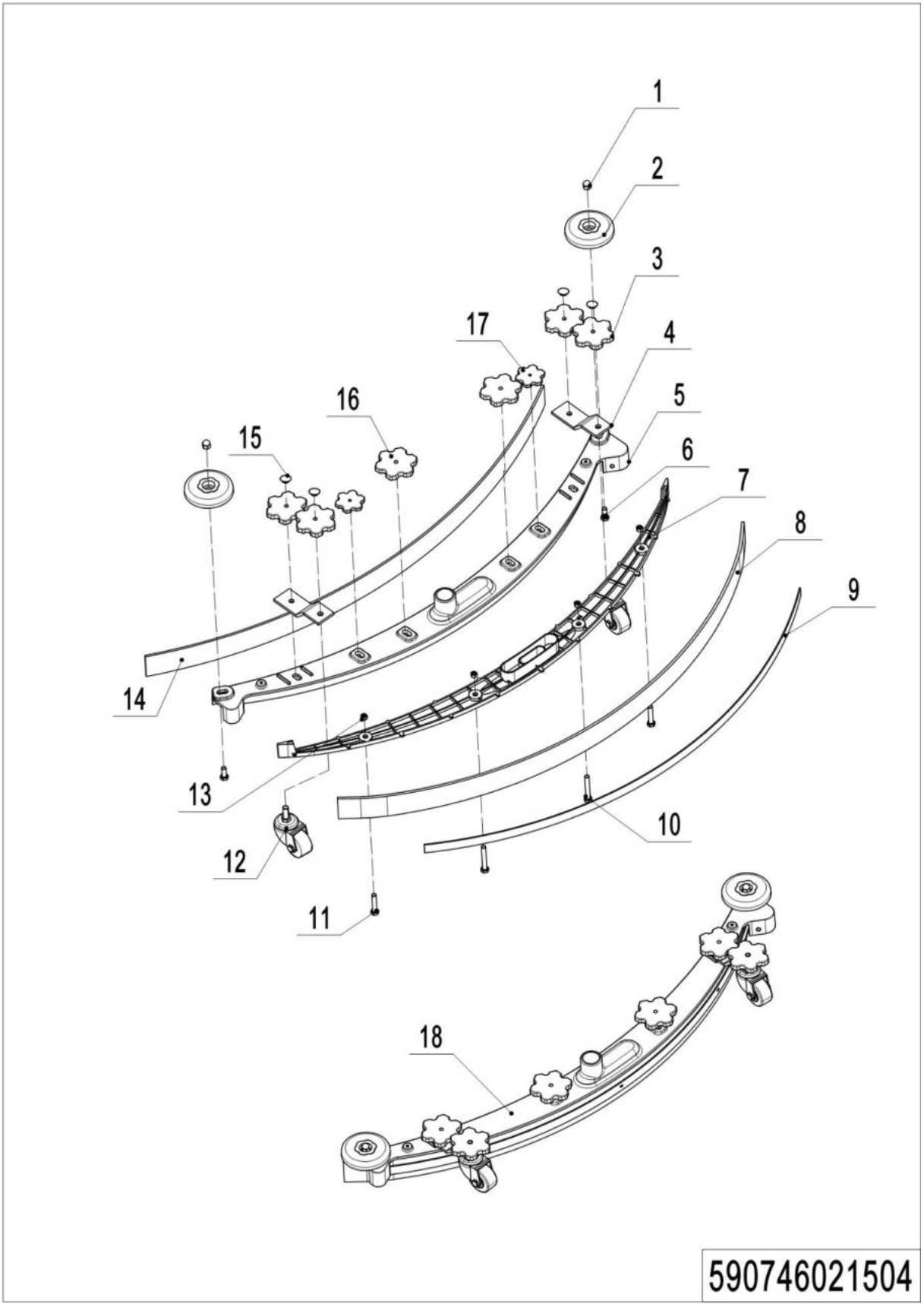

1= Supply as package. 2= Supply with constraints. 3= Phasing-out supply. 4= Supply as assembly. 5= Check other tables.

05 Squeegee system（590746021504）

No.	Item Code	Mark	Item Description	Qty.	Substitute	Note
1	590398520062		BLIND NUT M8	2		
2	590798520060		BUMPER ROLLER	2		
3	590798520061		HANDLE	2		
4	590798520062		REAR WHEEL BRACKET	2		
5	590798520063		WIPER	1		
6	590798520064		SCREW HEX HD M8x45	2		
7	590798520065		FLOOR	1		
8	590798520066		BLADE REAR RUBBER	1		
8	590798520114		BLADE REAR NR	1		OPTIONAL
8	590798520115		BLADE REAR PU	1		OPTIONAL
9	590798520068		BATTEN	1		
10	590798520069		SCREW HEX HD M8x70	2		
11	590798520070		SCREW HEX HD M8x60	4		
12	590798520071		BUMPER ROLLER	2		
13	590198520122		NUT M8	6		
14	590798520067		BLADE FRONT RUBBER	1		
14	590798520116		BLADE FRONT NR	1		OPTIONAL
14	590798520117		BLADE FRONT PU	1		OPTIONAL
15	590798520123		WATERPROOF COVER	4		
16	590798520072		HANDLE	2		
17	590798520073		HANDLE	4		
18	590798510014		SQUEEGEE ASSEMBLY	1		

06 Retaining edge (590746021505)

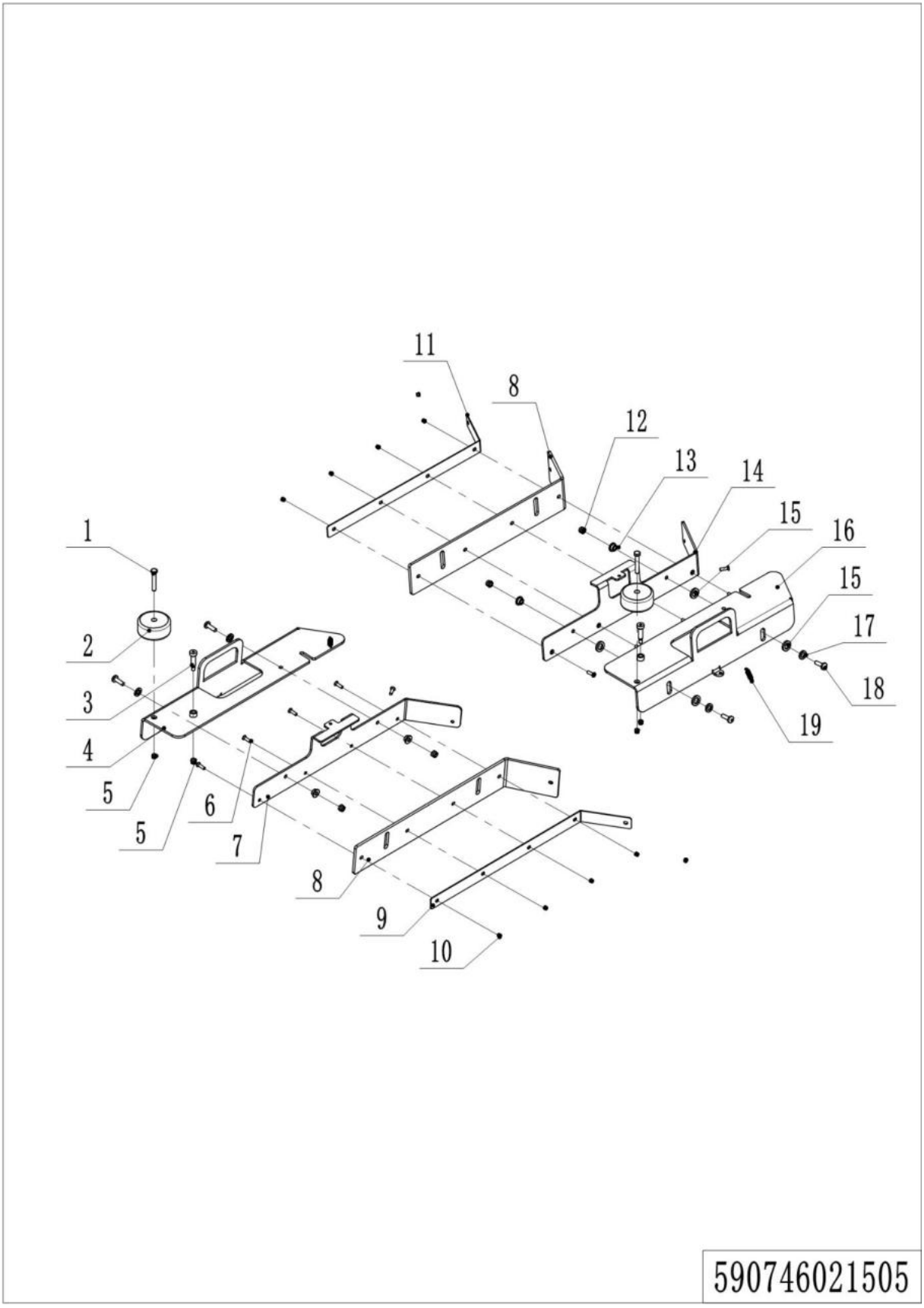

1= Supply as package. 2= Supply with constraints. 3= Phasing-out supply. 4= Supply as assembly. 5= Check other tables.

06 Retaining edge（590746021505）

No.	Item Code	Mark	Item Description	Qty.	Substitute	Note
1	590798520054		SCREW SOCKET HD M10x55	2		
2	590798520013		BUMPER ROLLER	2		
3	590798520044		SHOULDER SCREW	2		
4	590798520018		RIGHT SHEET METAL	1		Use in NR1060
4	590798520080		RIGHT SHEET METAL	1		Use in NR860P
5	590198520065		NUT HEX SELF LOCKING M10	2		
6	590198520143		SCREW SOCKET HD M6x20	6		
7	590798520020		RIGHT FIXING PLATE	1		Use in NR1060
7	590798520082		RIGHT FIXING PLATE	1		Use in NR860P
8	590798520001		RUBBER STRIP	2		Use in NR1060
8	590798520076		RUBBER STRIP	2		Use in NR860P
9	590798520129		RIGHT BATTEN	2		Use in NR1060
9	590798520130		RIGHT BATTEN	2		Use in NR860P
10	590198520067		NUT HEX SELF LOCKING M6	10		
11	590798520021		LEFT BATTEN	2		Use in NR1060
11	590798520083		LEFT BATTEN	2		Use in NR860P
12	590198520066		NUT HEX SELF LOCKING M8	4		
13	590798520121		SPACER D8xD12x10	4		
14	590798520019		LEFT FIXING PLATE	1		Use in NR1060
14	590798520081		LEFT FIXING PLATE	1		Use in NR860P
15	590198520028		WASHER FLAT D12xD24x2.5	8		
16	590798520017		LEFT SHEET METAL	1		Use in NR1060
16	590798520079		LEFT SHEET METAL	1		Use in NR860P
17	590198520109		WASHER D8×D24×2	4		
18	590198520100		SCREW HEX HD M8×25	4		
19	590798520043		SPRING	2		

07 Solution assembly (590746021506)

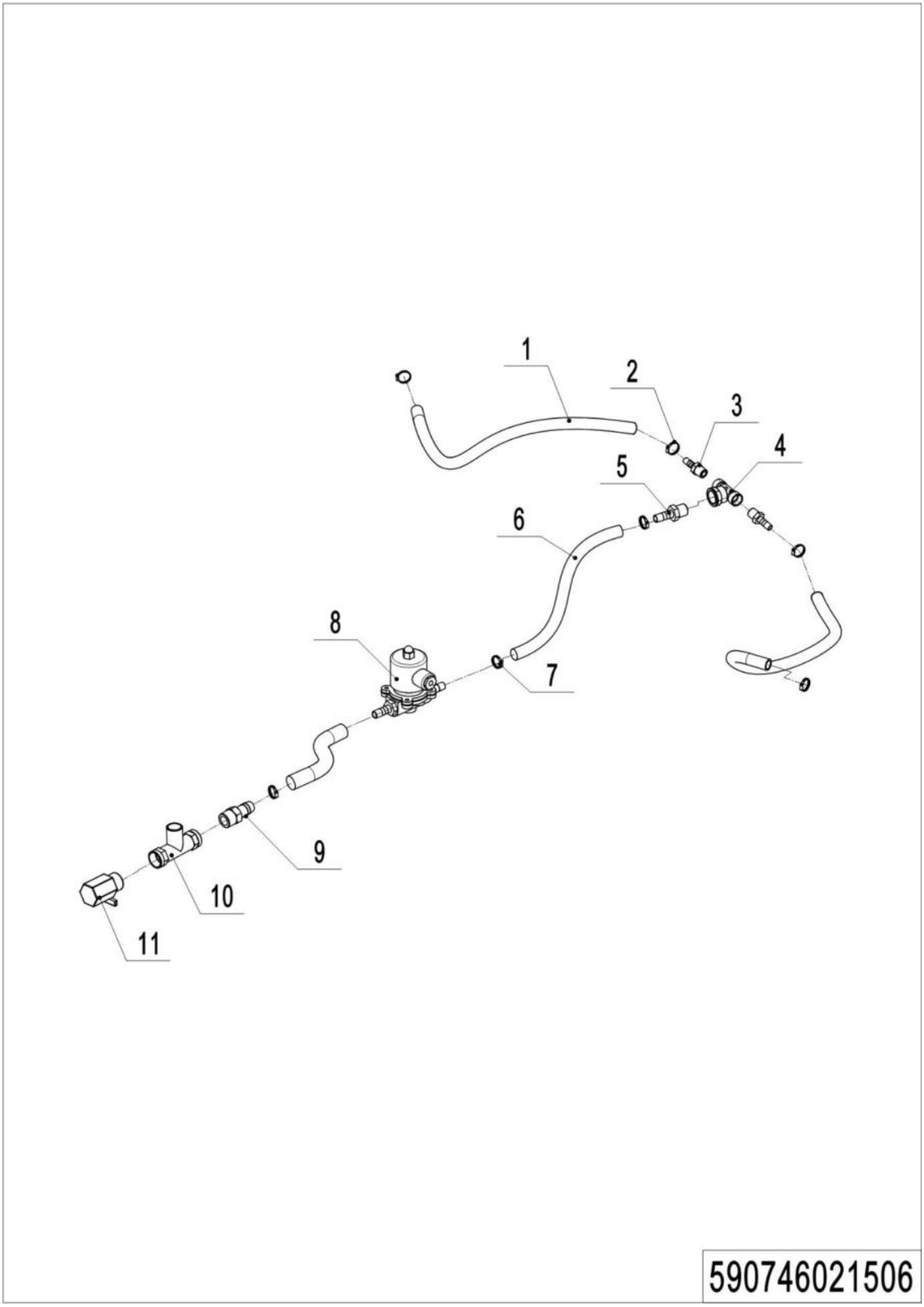

1= Supply as package. 2= Supply with constraints. 3= Phasing-out supply. 4= Supply as assembly. 5= Check other tables.

07 Solution assembly（590746021506）

No.	Item Code	Mark	Item Description	Qty.	Substitute	Note
1	590198520062		HOSE PVC	0.8m		
2	590198520096		HOSE CLAMP D13-19	4		
3	590498520200		CONNECTOR Ø12	2		
4	590498520135		T WATER PIPE JOINT	1		
5	590498520018		CONNECTOR Ø19	1		
6	590498520015		HOSE Ø19	1m		
7	590498520076		HOSE CLAMP D19-29	4		
8	590498510007		SOLENOID VALVE 24V	1		
9	590498520144		STRAIGHT PIPE	1		
10	590798520122		THREE-WAY PIPE	1		
11	590498520080		VALVE	1		

08 Wiper frame (590746017002)

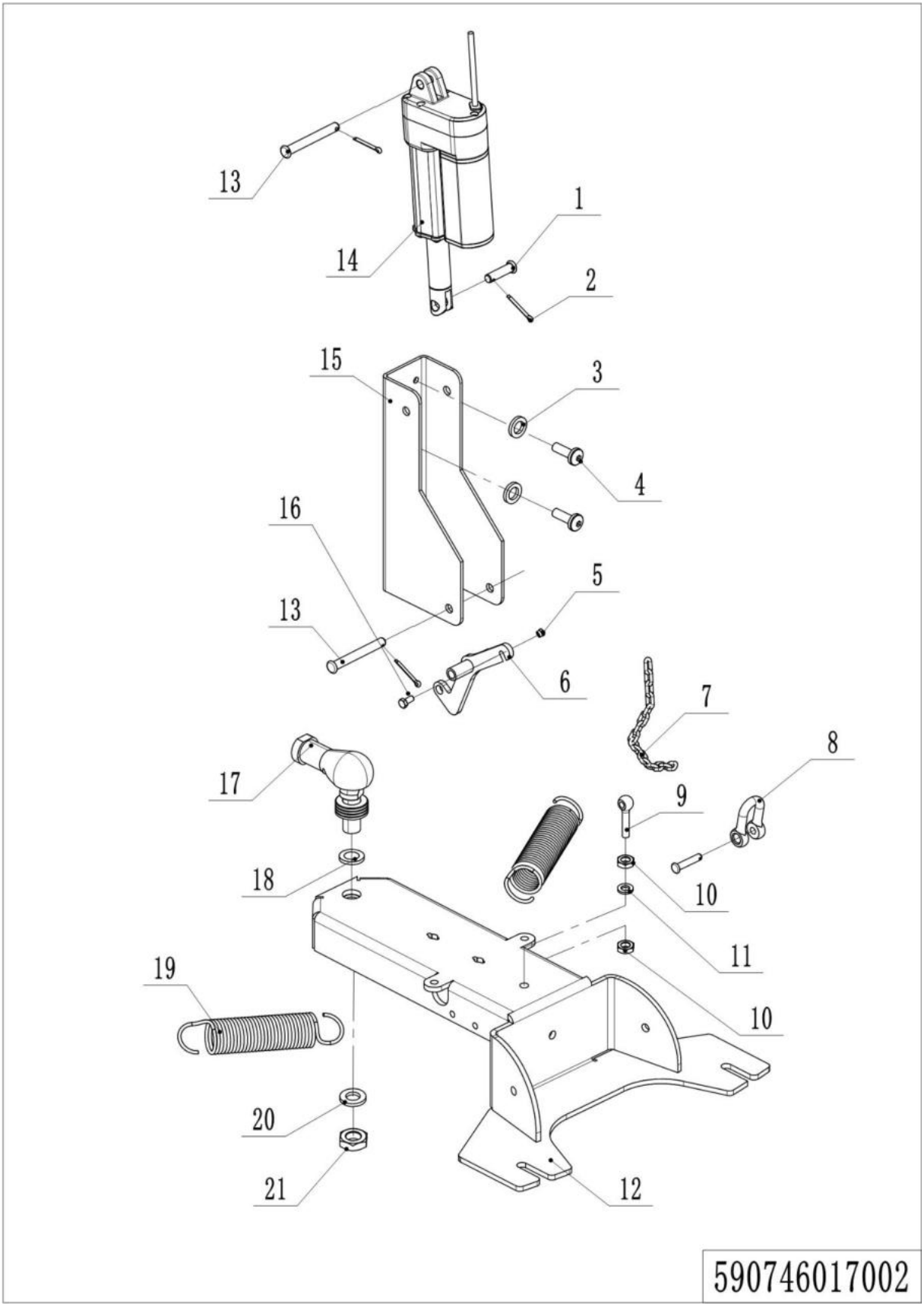

08 Wiper frame（590746017002）

No.	Item Code	Mark	Item Description	Qty.	Substitute	Note
1	590798520056		SHAFT 8x25	1		
2	590198520180		SPLIT PIN 3	4		
3	590398520051		WASHER FLAT D6x20x2	2		
4	590398520048		SCREW M6x20 W WASHER	2		
5	590198520067		NUT HEX SELF LOCKING M6	1		
6	590798520034		CONNNECTION ROD	1		
7	590498520128		CHAIN	0.3m		
8	590498520121		LIFTING RING M6	1		
9	590398520089		EYEBOLT M8x45	1		
10	590198520122		NUT M8	2		
11	590198520074		WAHSER SPLIT M8	1		
12	590798520023		WIPER HOLDER	1		
13	590498520068		SHAFT 8x55	2		
14	590798510002		REAR PUSH MOTOR	1		
15	590798520027		FIX SHEET METAL	1		
16	590198520084		SCREW HEX HD M6×20	1		
17	590398520066		BALL BARING M16	1		
18	590398520053		WASHER FLAT Ø16	6		
19	590798520047		SPRING	2		
20	590398520086		WAHSER SPLIT M16	2		
21	590398520063		NUT M16	1		

09 Front body (590746021507)

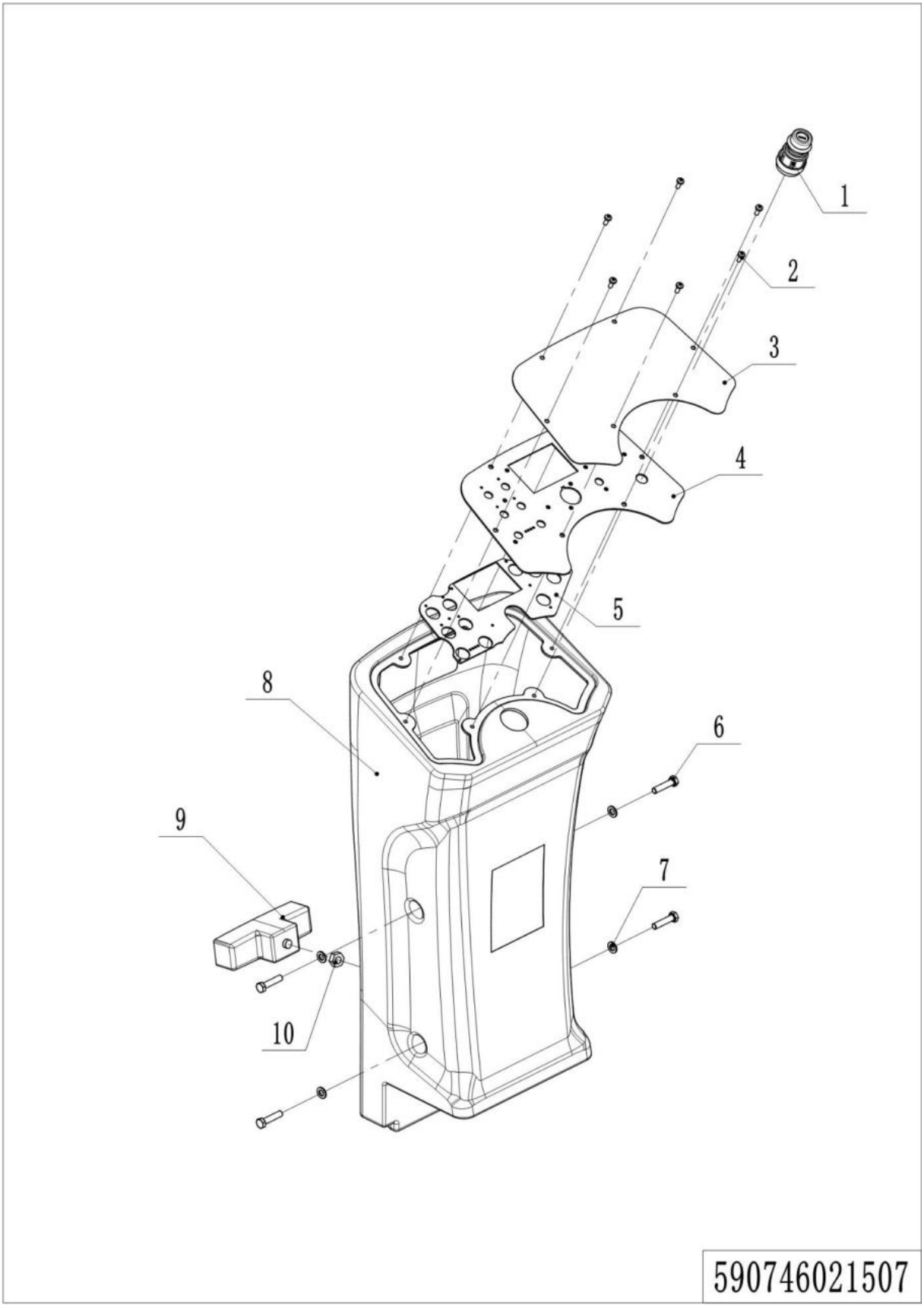

1= Supply as package. 2= Supply with constraints. 3= Phasing-out supply. 4= Supply as assembly. 5= Check other tables.

09 Front body（590746021507）

No.	Item Code	Mark	Item Description	Qty.	Substitute	Note
1	590798510015		START SWITCH WITH KEY	1		
2	590198520091		SCREW CYL HD M5x12	6		
3	590798520000		DECAL	1		
4	590798520035		HOLDER	1		
5	590798510011		PCB CONTROL PANEL	1		
6	590498520130		SCREW SOCKET HD M8x35	4		
7	590398520002		WASHER D8xD30x2.5	4		
8	590798520011		FRONT COVER	1		
9	590398510009		LED LIGHT	1		
10	590198520122		NUT M8	1		

Chapter 3： Electrical parts

01 Electronic control components (590746033001)

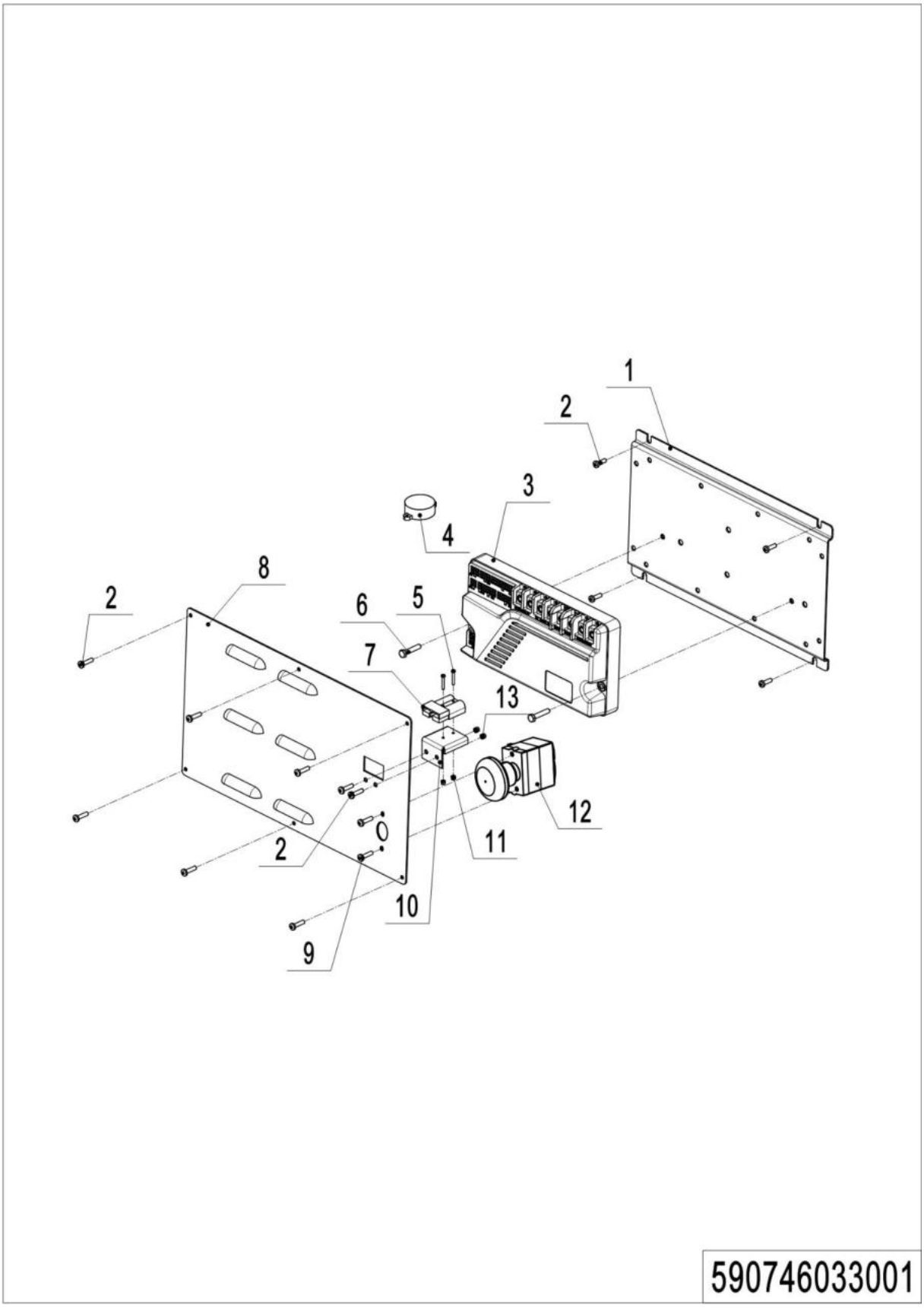

1= Supply as package. 2= Supply with constraints. 3= Phasing-out supply. 4= Supply as assembly. 5= Check other tables.

01 Electronic control components（590746033001）

No.	Item Code	Mark	Item Description	Qty.	Substitute	Note
1	590798520131		HOLDER	1		
2	590198520093		SCREW CYL HD M5x12	6		
3	590798510010		ELECTRIC BOARD	1		
4	590398520091		BUZZER	1		
5	590398520078		SCREW CYL HD M3x20	4		
6	590198520085		SCREW HEX HD M6x30	2		
7	509198520183		MICROSWITCH	1		
8	590798510007		CHARGER WIRE	1		
9	590798520132		COVER	1		
10	590198520191		SCREW PAN HD M5×8	8		
11	590398520032		HOLDER	1		
12	590198520102		NUT HEX SELF LOCKING M3	2		
13	590798510013		EMERGENCY SWITCH	1		
14	590198520068		NUT HEX SELF LOCKING M5	2		

02 Traction Battery (590746037001)

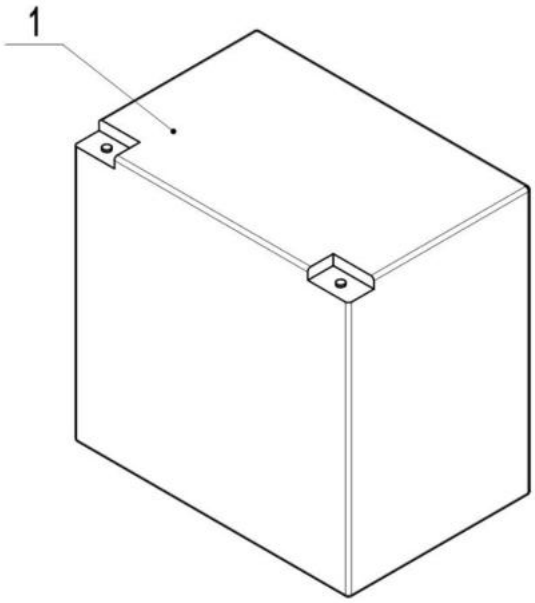

590746037001

1= Supply as package. 2= Supply with constraints. 3= Phasing-out supply. 4= Supply as assembly. 5= Check other tables.

02 Traction Battery（590746037001）

No.	Item Code	Mark	Item Description	Qty.	Substitute	Note
1	590798520100		BATTERY 6V200AH	6		

03 Charger (590746036501)

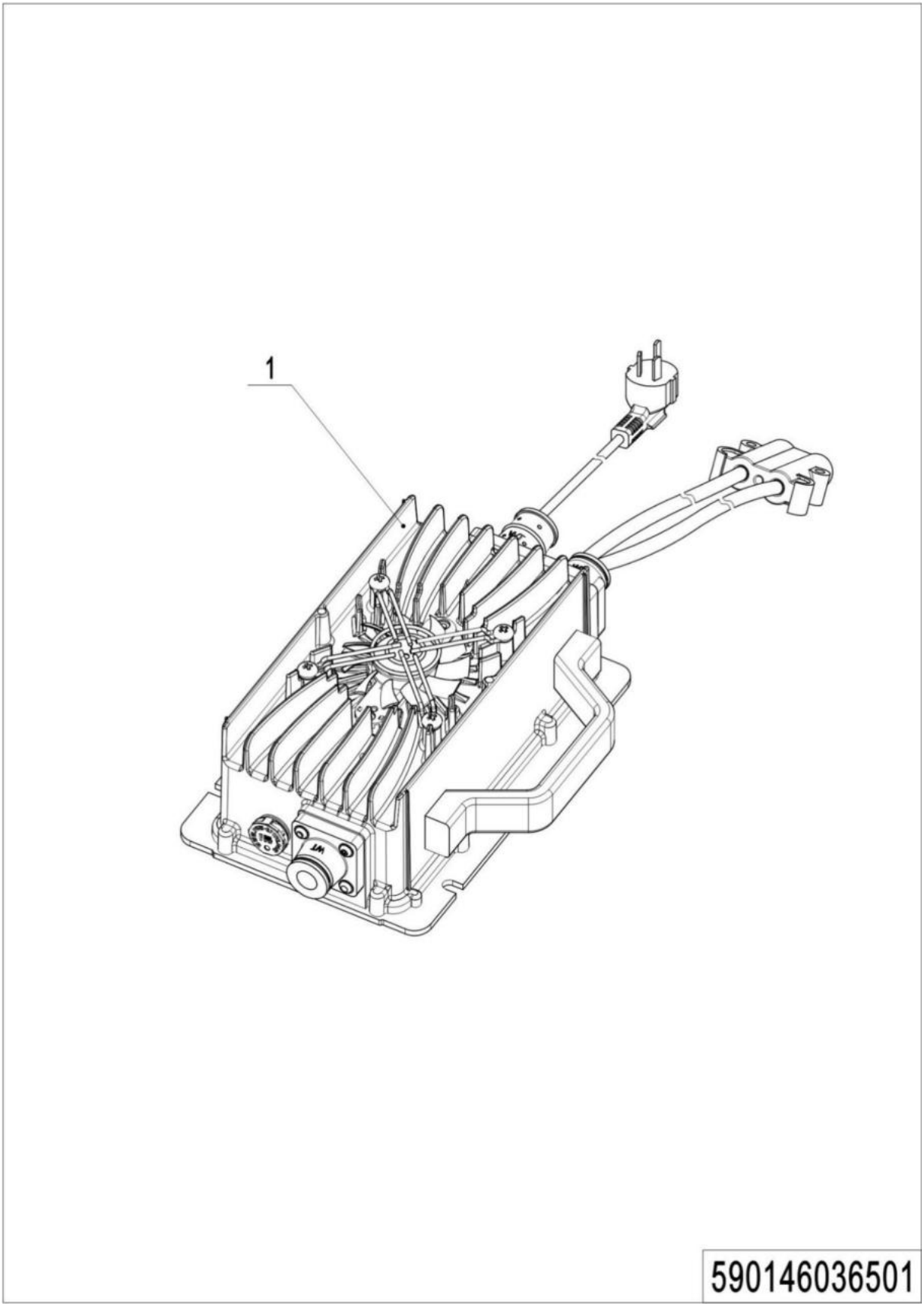

03 Charger（590746036501）

No.	Item Code	Mark	Item Description	Qty.	Substitute	Note
1	590798520101		CHARGE 36V25A(Asia)	1		
1	590798520102		CHARGE 36V25A(ENG)	1		
1	590798520103		CHARGE 36V25A(US)	1		
1	590798520104		CHARGE 36V25A(EU)	1		
1	590798520105		CHARGE 36V25A(AUS)	1		
1	590798520106		CHARGE 36V25A(ITA)	1		
1	590798520107		CHARGE 36V25A(SWE)	1		
1	590798520108		CHARGE 36V25A(ISR)	1		
1	590798520109		CHARGE 36V25A(BRA)	1		

04 Wire Harness (590746033002)

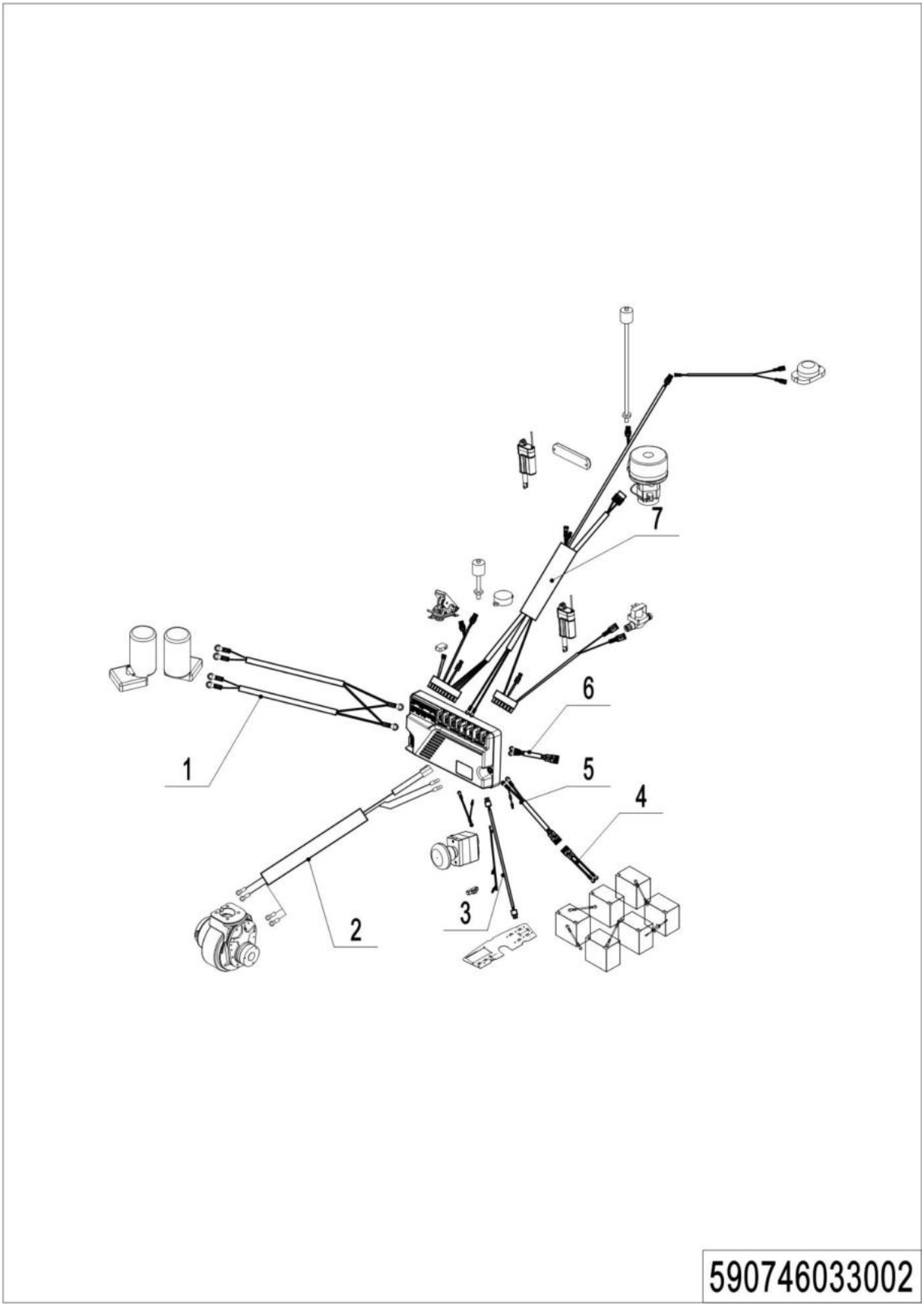

1= Supply as package. 2= Supply with constraints. 3= Phasing-out supply. 4= Supply as assembly. 5= Check other tables.

04 Wire Harness (590746033002)

序号	物料编码	Mark	物料名称	数量	替代零件号	说明
1	590798510016		Wire Harness	1		
2	590798510017		Wire Harness	1		
3	590798510018		Wire Harness	1		
4	590798510019		Wire Harness	1		
5	590798510020		Wire Harness	1		
6	590798510021		Wire Harness	1		
7	590798510022		Wire Harness	1		

Chapter 4: Others

01 Labels and decals (590746047001)

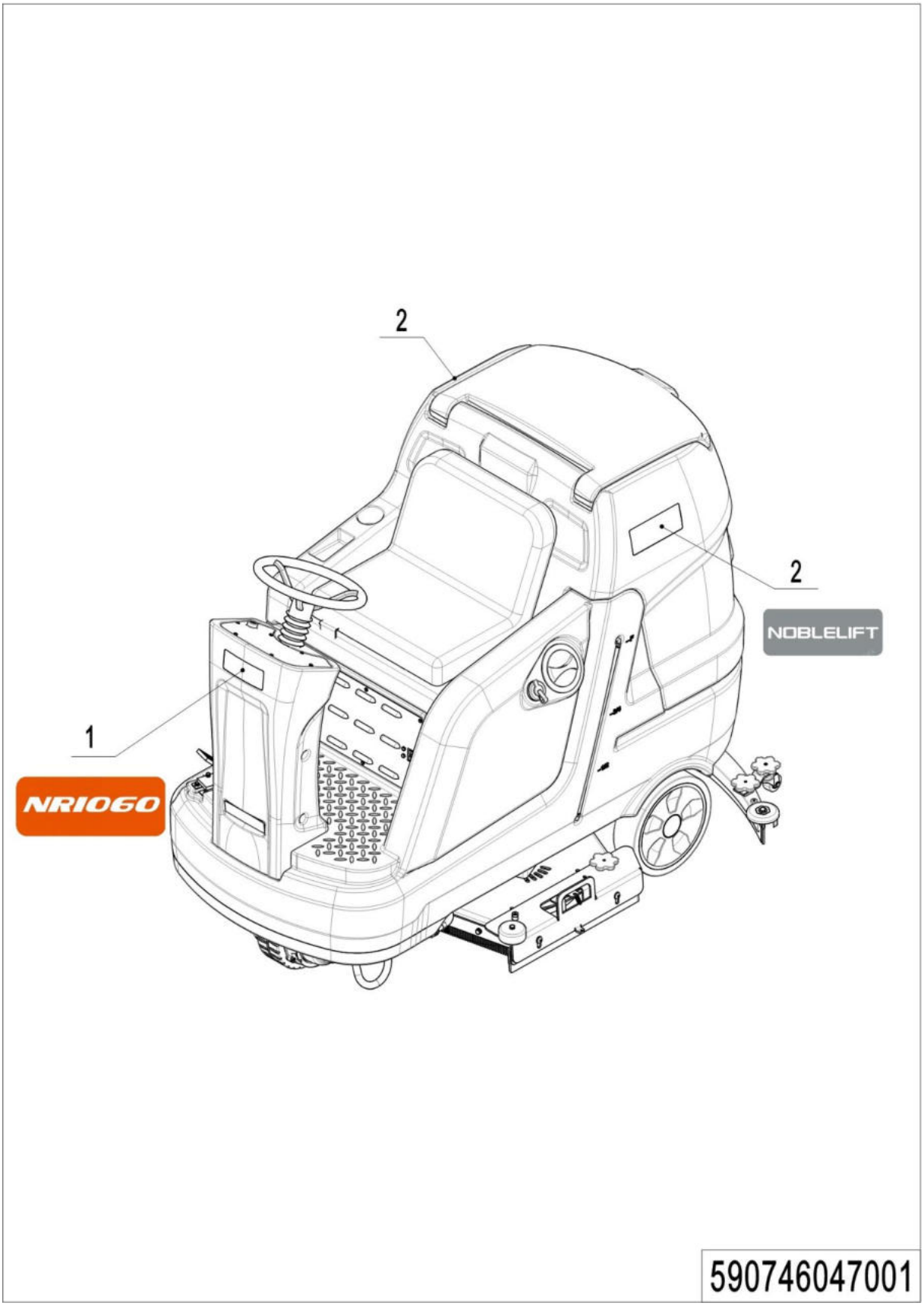

1= Supply as package. 2= Supply with constraints. 3= Phasing-out supply. 4= Supply as assembly. 5= Check other tables.

01 Labels and decals（590746047001）

No.	Item Code	Mark	Item Description	Qty.	Substitute	Note
1	590747020001		LABLE(NR1060)	1		
2	590498520111		LABLE(NOBLELIFT)	2		

02 Labels and decals (590746047002)

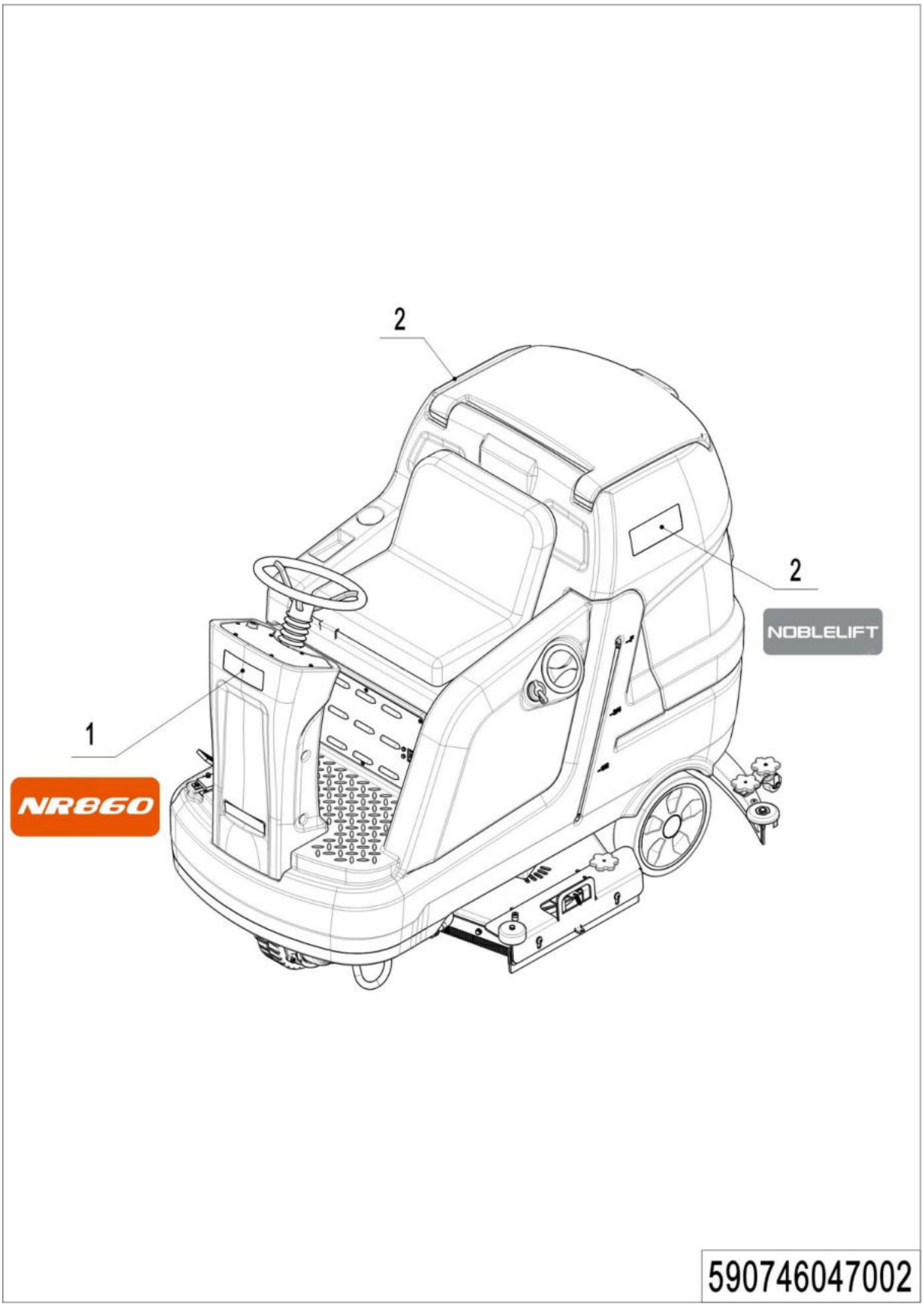

1= Supply as package. 2= Supply with constraints. 3= Phasing-out supply. 4= Supply as assembly. 5= Check other tables.

02 Labels and decals （590746047001）

No.	Item Code	Mark	Item Description	Qty.	Substitute	Note
1	590747020002		LABLE(NR860P)	1		
2	590498520111		LABLE(NOBLELIFT)	2		

Appendix

01 Electrical Circuit Diagram (590746045501)

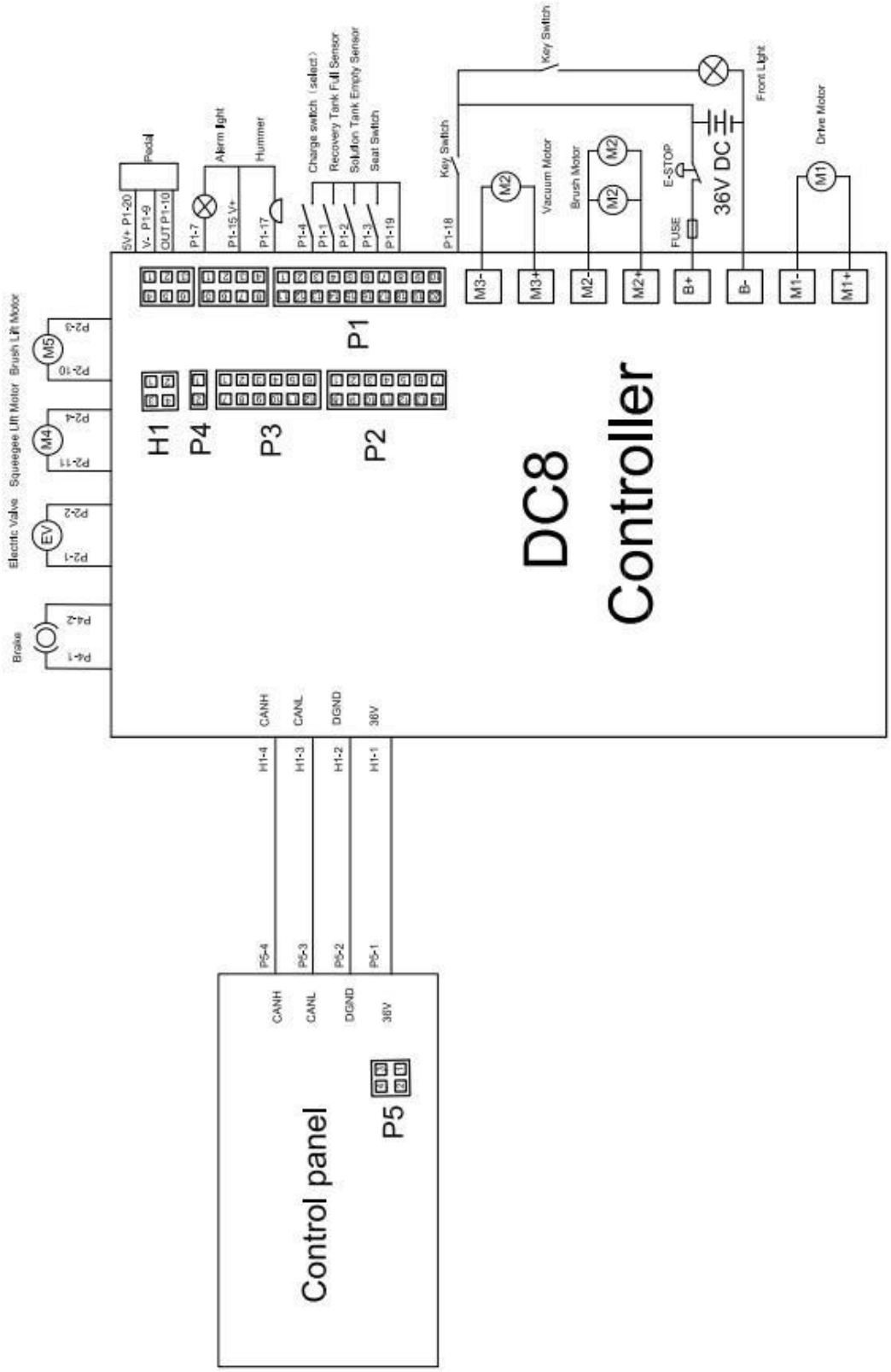

02 Easy Wornout Parts List

No.	Item Code	Item Description	Qty.	Chapter/ Section/ Number
1	590798510004	ACCELERATOR	1	Chapter 2/01/02
2	590798520004	FILTER	1	Chapter 2/01/09
3	590398510010	ALARM LIGHT	1	Chapter 2/01/17
4	590198520061	GASKET	1.7m	Chapter 2/02/02
5	590798520041	DRAIN HOSE	1	Chapter 2/02/06
6	590798520042	DIRT SUCTION PIPE	1	Chapter 2/02/08
7	590798520038	CHAIR	1	Chapter 2/02/16
8	590798510012	SEAT SWITCH	1	Chapter 2/02/17
9	590798510003	VACUUM MOTOR	1	Chapter 2/02/22
10	590798520039	STEERING WHEEL COVER	1	Chapter 2/03/01
11	590798510005	REDUCTION GEARMOTOR	2	Chapter 2/04/01
12	590798510001	FRONT PUSH MOTOR	1	Chapter 2/04/26
13	590798520060	BUMPER ROLLER	2	Chapter 2/05/02
14	590798520071	BUMPER ROLLER	2	Chapter 2/05/12
15	590798510014	SQUEEGEE ASSEMBLY	1	Chapter 2/05/18
16	590798520013	BUMPER ROLLER	2	Chapter 2/06/02
17	590798520001	RUBBER STRIP	2	Chapter 2/06/08
18	590798520076	RUBBER STRIP	2	Chapter 2/06/08
19	590498510007	SOLENOID VALVE 24V	1	Chapter 2/07/08
20	590798510002	REAR PUSH MOTOR	1	Chapter 2/08/14
21	590798510015	START SWITCH WITH KEY	1	Chapter 2/09/01
22	590398510009	LED LIGHT	1	Chapter 2/09/09
23	590798510013	EMERGENCY SWITCH	1	Chapter 3/01/13

1= Supply as package. 2= Supply with constraints. 3= Phasing-out supply. 4= Supply as assembly. 5= Check other tables.

03 Consumable Parts List

No.	Item Code	Item Description	Qty.	Chapter/ Section/ Number
1	590398520092	BRUSH	2	Chapter 2/04/34
	590398520093	MAGNETIC PAD	2	Chapter 2/04/34
	590798520110	BRUSH(SOFT)	2	Chapter 2/04/34
	590798520111	BRUSH(HARD)	2	Chapter 2/04/34
	590798520074	BRUSH	2	Chapter 2/04/34
	590798520075	MAGNETIC PAD	2	Chapter 2/04/34
	590798520112	BRUSH(SOFT)	2	Chapter 2/04/34
	590798520113	BRUSH(HARD)	2	Chapter 2/04/34
2	590798520066	BLADE REAR RUBBER	1	Chapter 2/05/08
	590798520114	BLADE REAR NR	1	Chapter 2/05/08
	590798520115	BLADE REAR PU	1	Chapter 2/05/08
3	590798520067	BLADE FRONT RUBBER	1	Chapter 2/05/14
	590798520116	BLADE FRONT NR	1	Chapter 2/05/14
	590798520117	BLADE FRONT PU	1	Chapter 2/05/14
4	590798520001	RUBBER STRIP		Chapter 2/06/08
	590798520076	RUBBER STRIP		Chapter 2/06/08

1= Supply as package. 2= Supply with constraints. 3= Phasing-out supply. 4= Supply as assembly. 5= Check other tables.