Print Number：　　Print Date：

Floor Scrubber ND530

PARTS MANUAL

590246020101

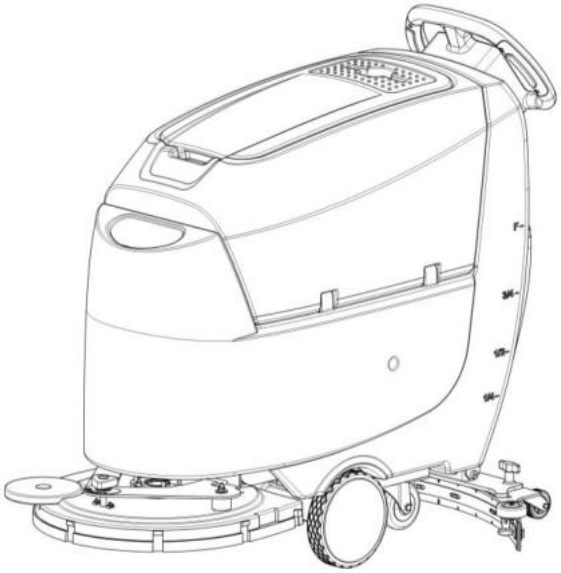

Version：V05

Truck Identification Number From：

Parts Manual

ND530-PM05EN

Please order spare parts from authorized dealers of our Company.

In order to avoid wrong delivery, all the orders for spare parts should specify the following items:

- Truck model, identification number and manufacture year.
- Orders for spare parts of mast, hydraulic transmission unit, steering axle, motor, etc. shall indicate the manufacture number of these parts.
- Codes for Our Company spare parts are shown in the table of parts manual. Please also pay attention to the description of supply status, order quantity, etc. (check the number listed in "Mark" column of the parts manual).

"Mark" Column:

The unmarked indicates the parts are in short supply cycle.

Number 1: supply as package. Indicating these that parts are small parts and seal parts, which are supplied in package unit and in short supply cycle.

Number 2: supply with constraints. Indicating that these spare parts are not in stock and will be prepared for production after receiving the order from customers, which are in long supply cycle.

Number 3: phasing-out supply. Indicating that these parts will be replaced by new parts due to technical improvements and the current stock will not be available when these parts run out. Please check the description of technical improvements notice.

Number 4: supply as assembly. Indicating that these parts are assembly parts defined by manufacture process, which cannot be supplied as a single part.

Number 5: check other tables.

This parts manual is the property of Our Company and can be shared under the confidential agreement only, Our Company has the right to claim for compensation of any unauthorized use. Copy without permission is not allowed.

Figures in the manual are not limited by the original design. our Company reserves the right to improve the products for continuous technology progress.

Table of Contents

Chapter 1：Drive System 5
01 Drive Assembly (590246013501) 5
Chapter 2：Body Structure 7
01 Solution Tank (590246021501) 7
01 Solution Tank (590246021501) Continuation 9
02 Recovery Tank (590246021502) 11
03 Chassis (590246021503) 13
04 Control Handle (590246021504) 15
05 Solution System (590246021505) 17
06 Squeegee System (590246021506) 19
06 Squeegee System (590246021506) Continuation 21
07 Brush System (590246021507) 23
Chapter 3：Electronic Control System 25
01 Control System (590246033001) 25
02 Wire Harness (Lead-acid battery) (590246033001) 27
03 Wire Harness (Lithium battery) (590246033002) 29
04 Traction Battery (590146037001) 31
05 Charger (590146036501) 33
Appendix 2
01 List Of Consumables 2
02 Consumables List 3

Chapter 1: Drive System

01 Drive Assembly (590246013501)

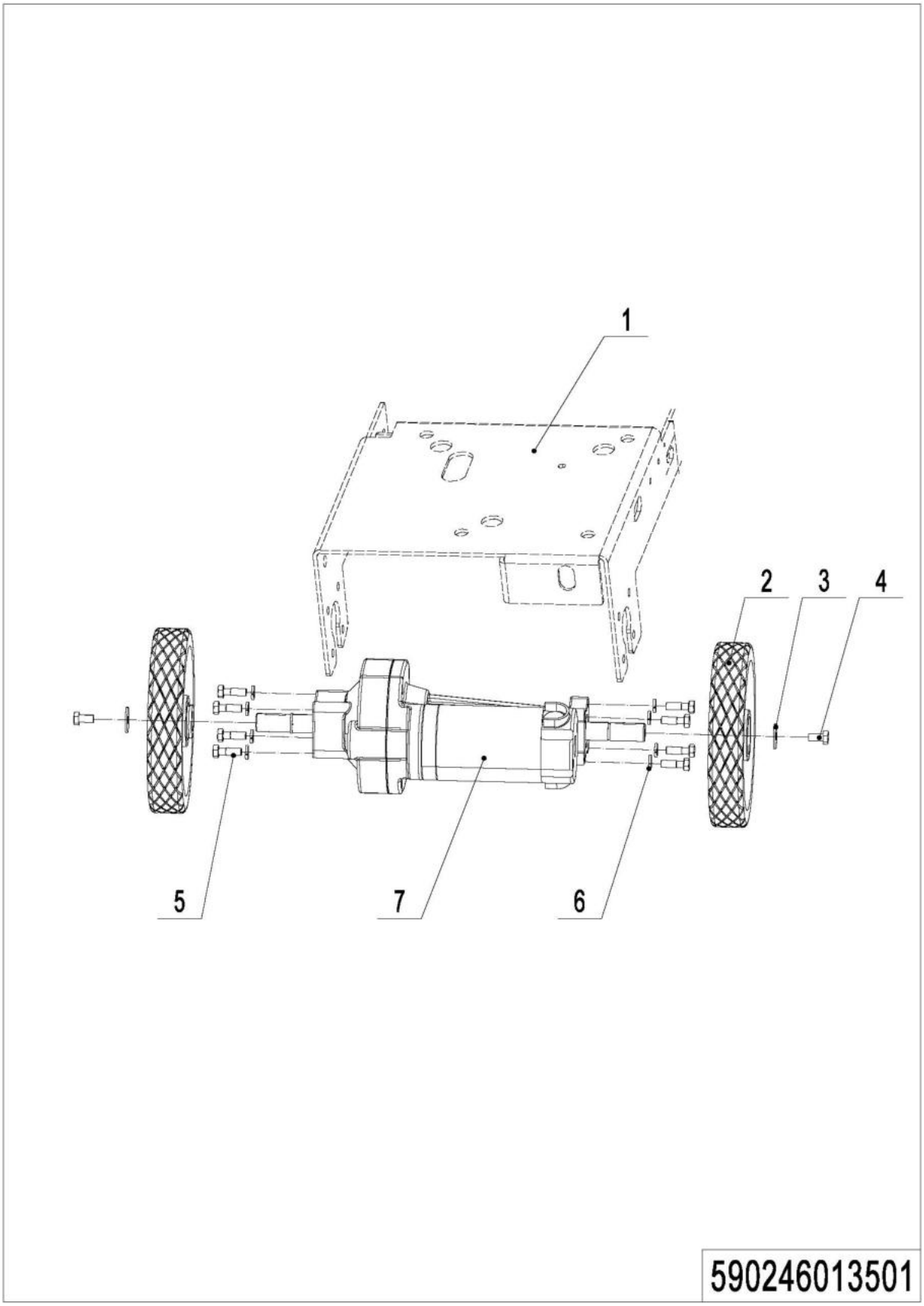

01 Drive Assembly (590246013501)

No.	Item Code	Mark	Item Description	Qty.	Substitute	Note
1	590198520031		Chassis	1		
2	590298520003		Wheel	2		
3	590198520077		Gasket	2		
4	590198520082		Screw M8x16	2		
5	590198520100		Screw M8x25	8		
6	590198520074		Spring Washer	8		
7	590298520020		Drive Motor	1		

Chapter 2: Body Structure

01 Solution Tank (590246021501)

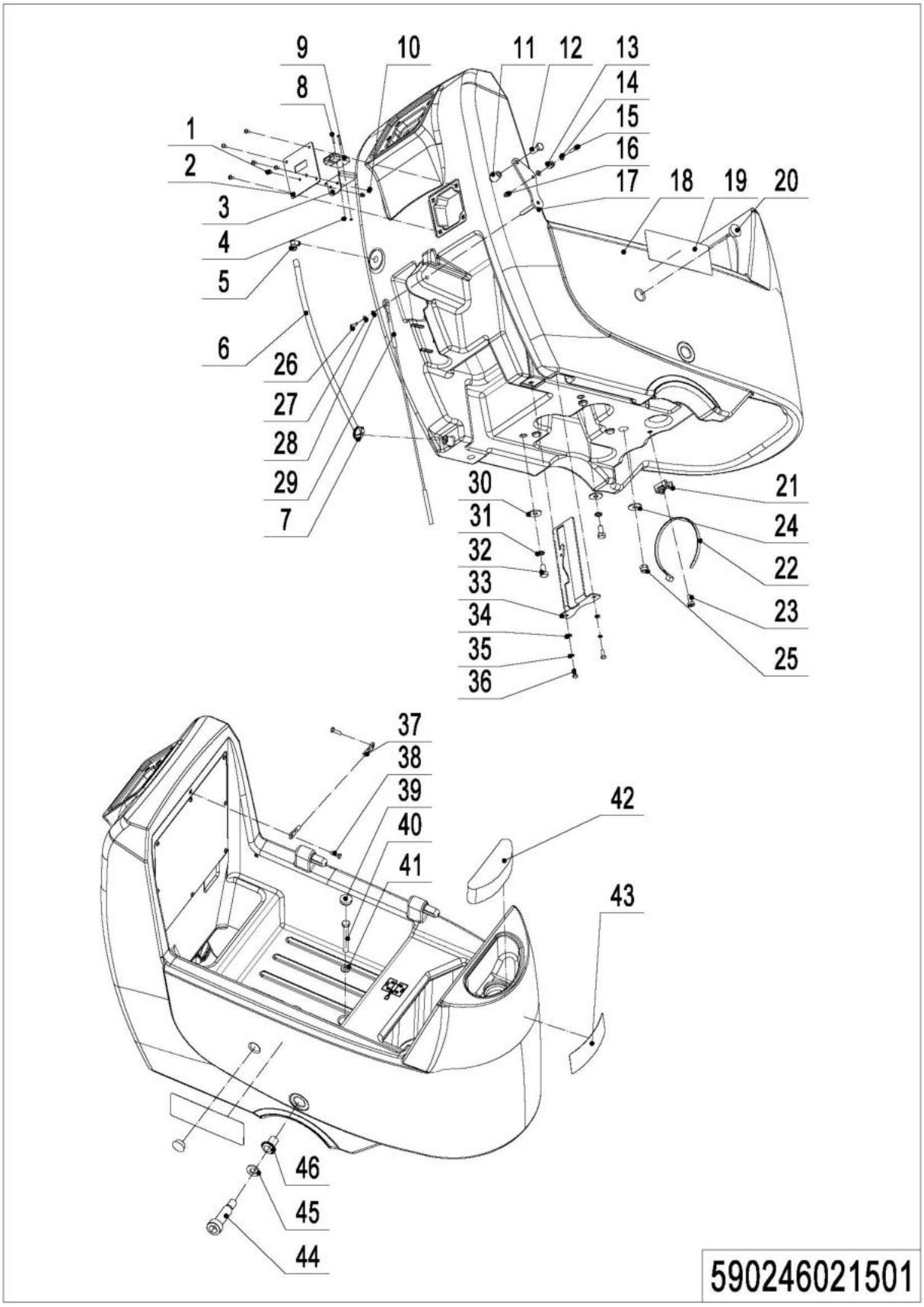

Print Number:　　Print Date:

01 Solution Tank (590246021501)

No.	Item Code	Mark	Item Description	Qty.	Substitute	Note
1	590198520093		Screw M5x12	6		
2	590298520010		Close Plate	1		
2*	590298520045		Close Plate (Li-Battery)	1		
3	590398520032		Fixed Sheet Metal	1		
3*	590198520213		Fixed Plate	1		
4	590198520102		Nut M3	2		
5	590298520028		Adapter	1		
6	590298520016		Hose	1		0.55m
7	590298520029		Hoop	1		
8	590398520078		Screw M3x20	2		
9	590298520021		Wire Harness	1		
9*	590198520212		Wire Harness	1		
10	590198520068		Nut M5	2		
11	590198520011		Tiller	1		
12	590198520126		Screw M10x25	1		
13	590198520038		Spacer Bush	1		
14	590198520079		Gasket	2		
15	590198520084		Screw M6x20	1		
16	590198520070		Nut M6	1		
17	590198520037		Lifting	1		
18	590298520041		Solution Tank	1		
19	590498520111		Label	2		
20	590198520019		Cap	2		
21	590198520095		Ribbon Base	3		
22	590298520004		Ribbon	3		
23	590198520091		Screw M5x12	3		
24	590198520080		Gasket	1		
25	590198520065		Nut M10	1		
26	590198520094		Screw M5x16	1		
27	590198520076		Spring Washer	1		

01 Solution Tank (590246021501) Continuation

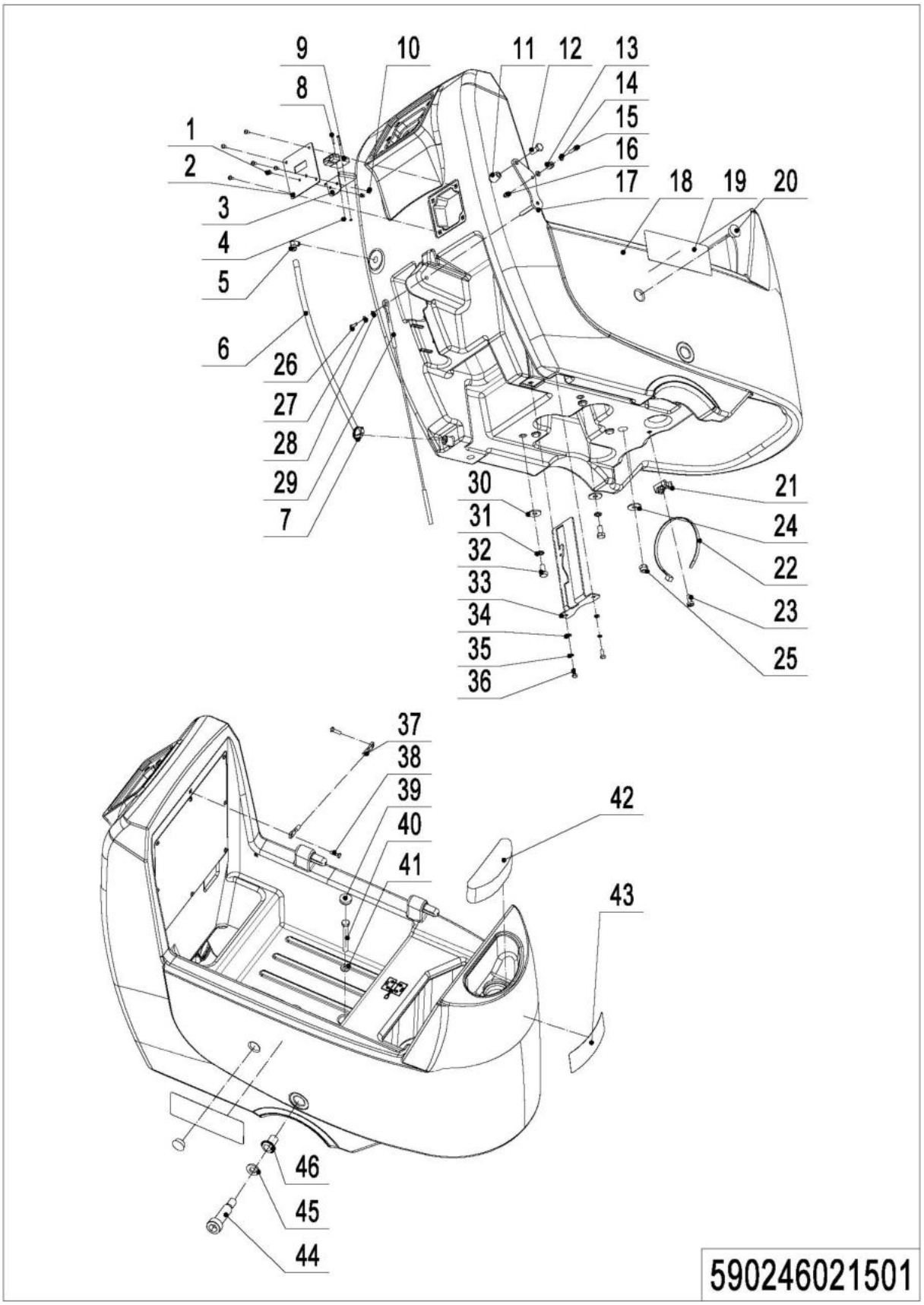

01 Solution Tank (590246021501) Continuation

No.	Item Code	Mark	Item Description	Qty.	Substitute	Note
28	590198520078		Gasket	1		
29	590198520039		Squeegee Rope	1		
30	590198520080		Gasket	2		
31	590198520073		Spring Washer	2		
32	590198520086		Screw M10x20	2		
33	590198520041		Fixed Plate	1		
34	590198520079		Gasket	2		
35	590198520075		Spring Washer	2		
36	590198520083		Screw M6x16	2		
37	590198520044		Recovery Tank Rope	1		
38	590198520093		Screw M5x12	2		
39	590198520196		Rubber Plug	1		
40	590198520089		Screw M10x90	1		
41	590198520081		Gasket	1		
42	590198520060		Filter Foam	1		
43	590298520001		Label	1		
44	590198520088		Screw M8x60	1		
45	590198520074		Spring Washer	1		
46	590198520042		Pedal Bushing	1		

02 Recovery Tank (590246021502)

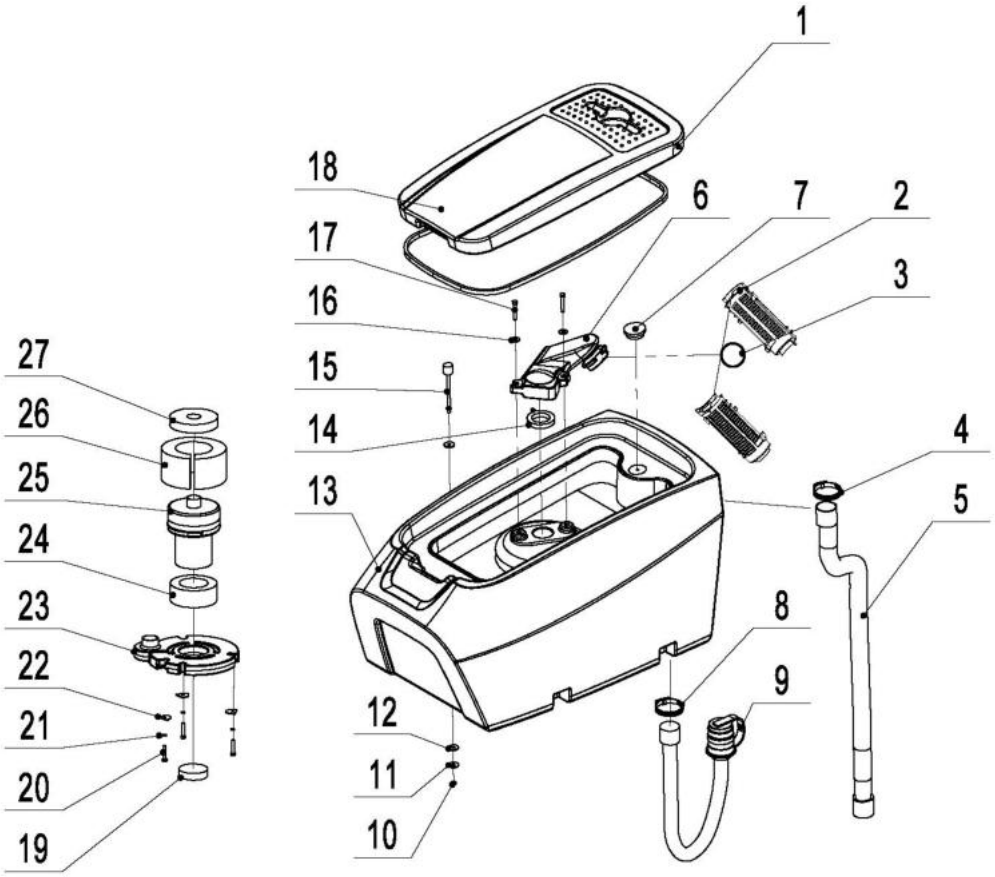

590246021502

Print Number: Print Date:

02 Recovery Tank (590246021502)

No.	Item Code	Mark	Item Description	Qty.	Substitute	Note
1	590298520056		Sealing Strip	1		
2	590198520014		Floating Ball Cage	2		
3	590198520015		Floating Ball	1		
4	590198520105		Hoop	2		
5	590198520064		Drain Hose	1		
6	590198520013		Support Bracket	1		
7	590398520097		Cap	1		
8	590198520097		Hoop	2		
9	590298520017		Drain Hose	1		
10	590498520141		Nut M10	1		
11	590198520080		Gasket	2		
12	590298520039		Washer	2		
13	590298520042		Recovery Tank	1		
14	590198520059		Sealing Pad	1		
15	590298520024		Sensor	1		
16	590198520079		Gasket	2		
17	590198520144		Screw M6x25	2		
18	590298520043		Tank Cover	1		
19	590198520058		Filter Foam	1		
20	590198520085		Screw M6x30	1		
21	590198520079		Gasket	3		
22	590198520040		Fixed Flat	3		
23	590198520020		Motor Pressure Plate	1		
24	590198520057		Sealing Pad	1		
25	590398510007		Vacuum Motor	1		
26	590198520056		Silencing Foam	1		
27	590198520054		Sealing Ring	1		

03 Chassis (590246021503)

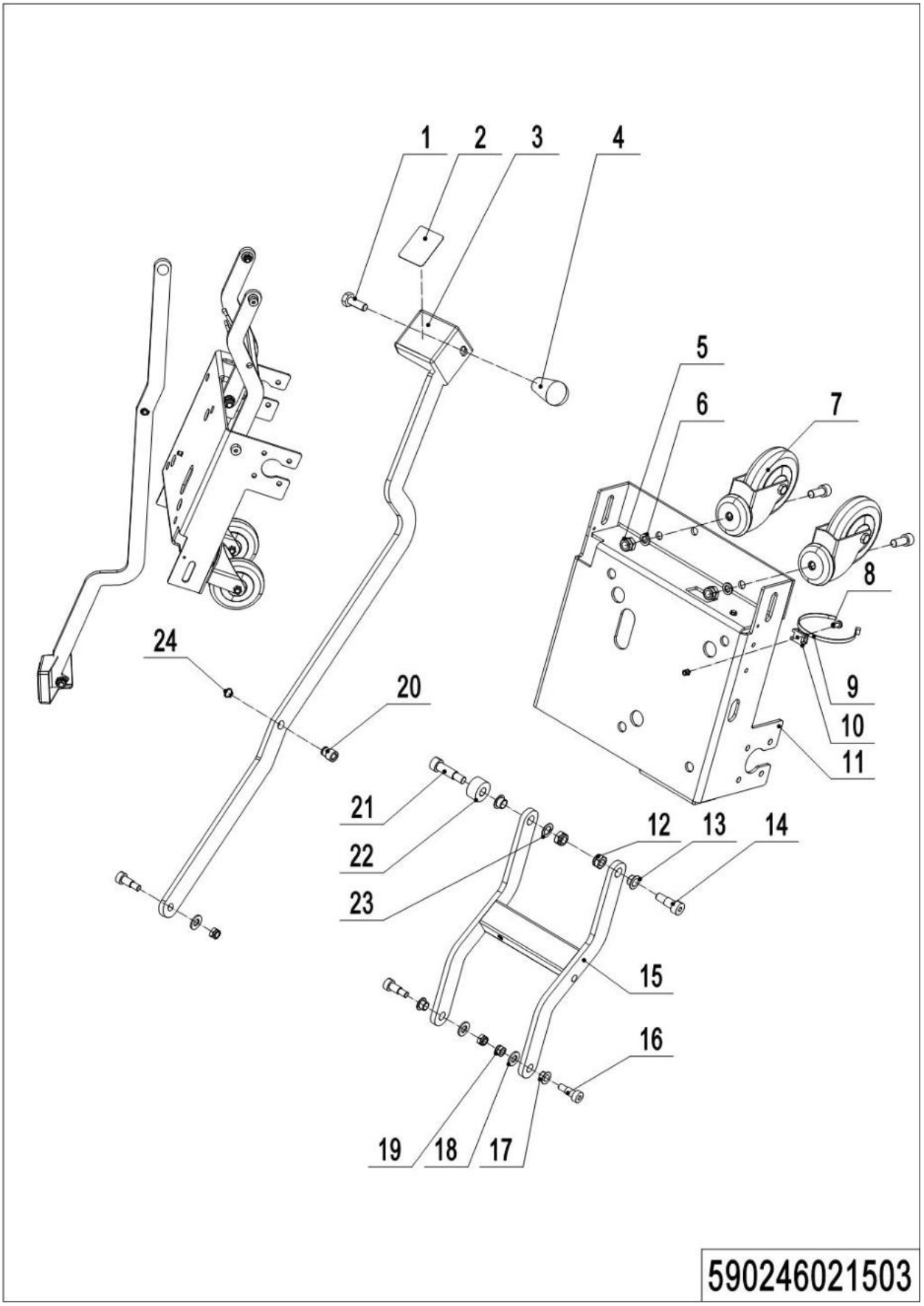

Print Number:　　Print Date:

03 Chassis (590246021503)

No.	Item Code	Mark	Item Description	Qty.	Substitute	Note
1	590198520126		Screw M10x25	1		
2	590198520002		Safety-walk Stickers	1		
3	590198520043		Pedal	1		
4	590198520011		Tiller	1		
5	590198520065		Nut M10	2		
6	590198520081		Gasket	2		
7	590198520005		Universal Caster	2		
8	590198520091		Screw M5x12	1		
9	590298520004		Ribbon	1		
10	590198520095		Ribbon Base	1		
11	590198520031		Chassis	1		
12	590198520065		Nut M10	2		
13	590198520017		Nylon Bush	2		
14	590198520110		Screw M12x16	1		
15	590198520030		Lifting Bracket	1		
16	590198520090		Screw M10x16	3		
17	590198520021		Nylon Bush	1		
18	590198520081		Gasket	3		
19	590198520066		Nut M8	3		
20	590198520115		Spacer Bush	1		
21	590198520112		Screw M12x30	1		
22	590198520113		Spacer Bush	1		
23	590198520111		Spring Washer	2		
24	590198520114		Card Pin	1		

04 Control Handle (590246021504)

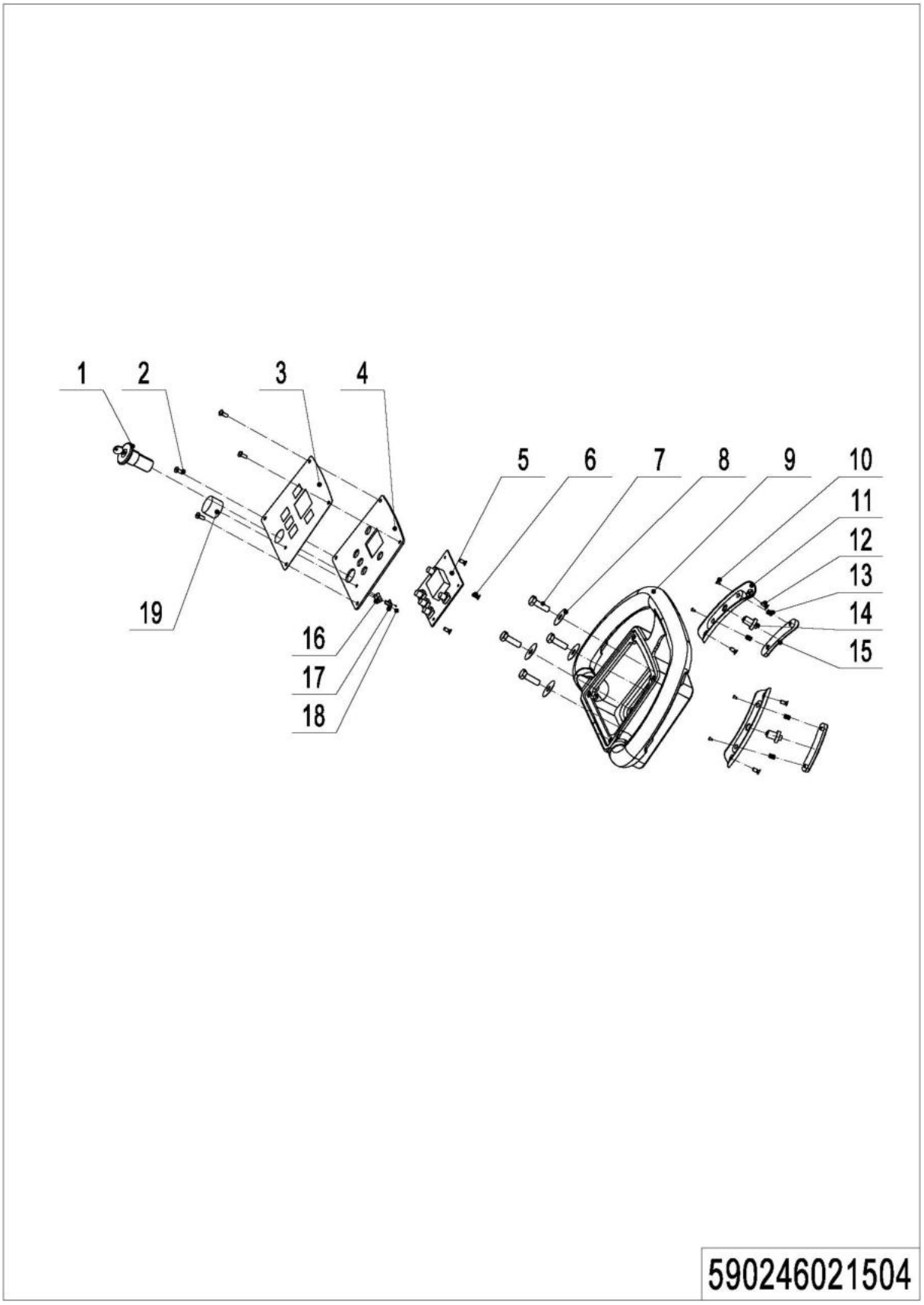

Print Number:　　Print Date:

04 Control Handle (590246021504)

No.	Item Code	Mark	Item Description	Qty.	Substitute	Note
1	590198520156		Key Switch	1		
1*	590398520111		Wire Harness	1		
2	590198520093		Screw M5x12	4		
3	590298520040		Label	1		
4	590298520013		PCB Fixed Plate	1		
4*	590298520014		PCB Fixed Plate (Li-Battery)	1		
5	590298520022		Operating Panel	1		
6	590298520036		Screw M5x8	5		
7	590198520098		Screw M8x20	4		
8	590198520109		Gasket	4		
9	590298520044		Handle	1		
10	590298520032		Screw M3x10	4		
11	590298520005		Switch Base	2		
12	590298520031		Screw M4x16	4		
13	590298520011		Spring	4		
14	590298520023		Switch	2		
15	590298520006		Switch Cover	2		
16	590298520012		Mounting Plate	6		
17	590298520025		Potentiometer	1		
18	590298520037		Screw M3x4	1		
19	590298520019		Knob	1		

05 Solution System (590246021505)

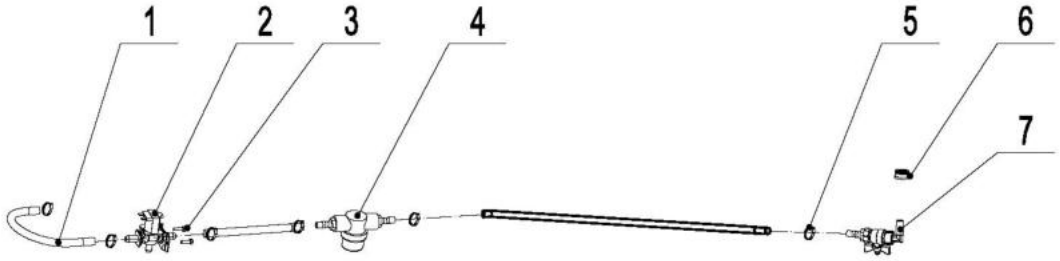

590246021505

05 Solution System (590246021505)

No.	Item Code	Mark	Item Description	Qty.	Substitute	Note
1	590298520055		Water Pipe	1		
2	590198520140		Solenoid Valve	1		
3	590198520092		Screw M4x10	2		
4	590198520134		Filter	1		
5	590198520096		Hoop	6		
6	590298520027		Ball Valve	1		
7	590298520015		Rubber Bushing	1		

06 Squeegee System (590246021506)

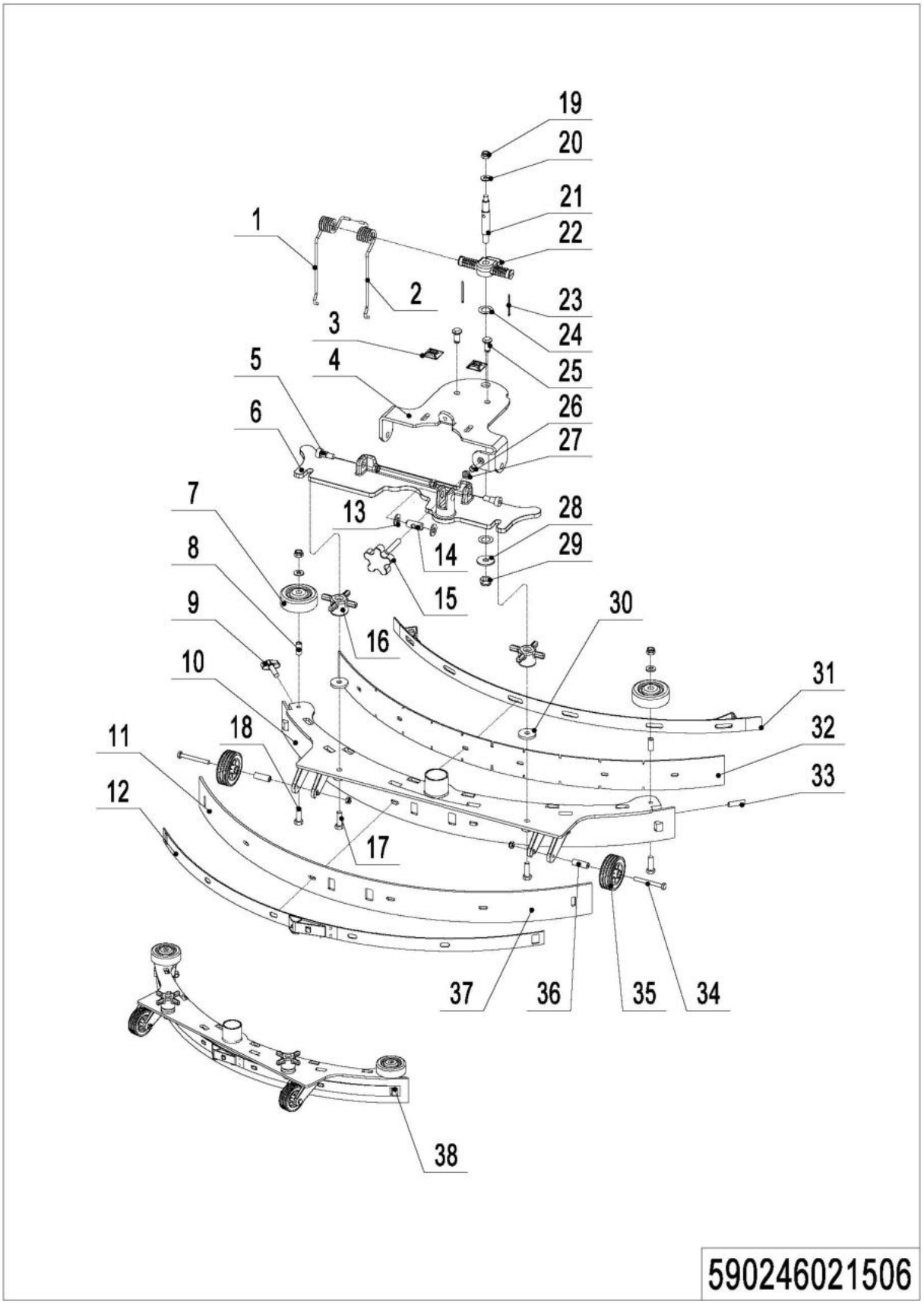

06 Squeegee System (590246021506)

No.	Item Code	Mark	Item Description	Qty.	Substitute	Note
1	590198520050		Torsional Spring (Left)	1		
2	590198520051		Torsional Spring (Right)	1		
3	590198520125		Fixed Base	2		
4	590198520049		Squeegee Holder	1		
5	590198520090		Screw M10x16	2		
6	590198520004		Squeegee Holder	1		
7	590198520131		Bumper Wheel	2		
8	590198520146		Spacer Bush	2		
9	590198520148		Screw M8x30	1		
10	590198520127		Squeegee Blade	1		
11	590198520160		Rear Blade	1		
12	590198520200		Rear Batten	1		
13	590198520028		Nylon Washer	2		
14	590198520124		Pin Shaft	1		
15	590198520123		Knob	1		
16	590198520132		Knob	2		
17	590198520150		Screw M8x35	2		
18	590198520100		Screw M8x25	2		
19	590198520066		Nut M8	5		
20	590298520030		Flat Washer	3		
21	590198520118		Pin Shaft	1		
22	590198520026		Support Bracket	1		
23	590198520119		Pin	2		
24	590198520027		Nylon Washer	2		
25	590198520120		Pin Shaft	2		
26	590198520121		Spacer Bush	1		
27	590198520122		Nut M8	2		
28	590198520080		Gasket	1		
29	590198520065		Nut M10	1		
30	590198520053		Gasket	2		

06 Squeegee System (590246021506) Continuation

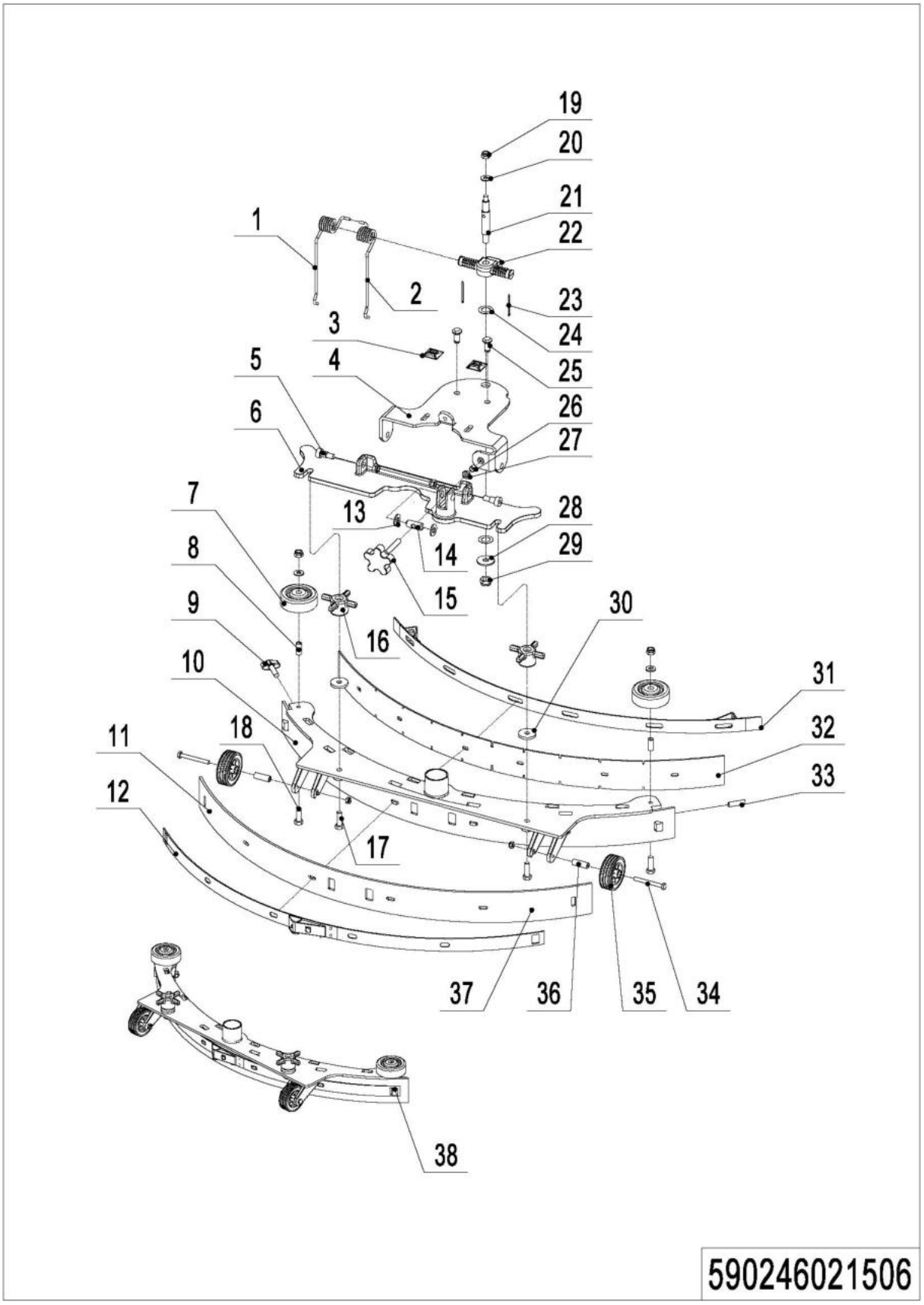

06 Squeegee System (590246021506) Continuation

No.	Item Code	Mark	Item Description	Qty.	Substitute	Note
31	590198520135		Front Batten	1		
32	590198520161		Front Blade	1		
33	590198520149		Screw M8x35	1		
34	590198520151		Screw M6x55	2		
35	590198520133		Wheel	2		
36	590198520152		Spacer Bush	2		
37	590198520067		Nut M6	2		
38	590198510003		Squeegee Kits	1		Excluding Rubber Strips

07 Brush System (590246021507)

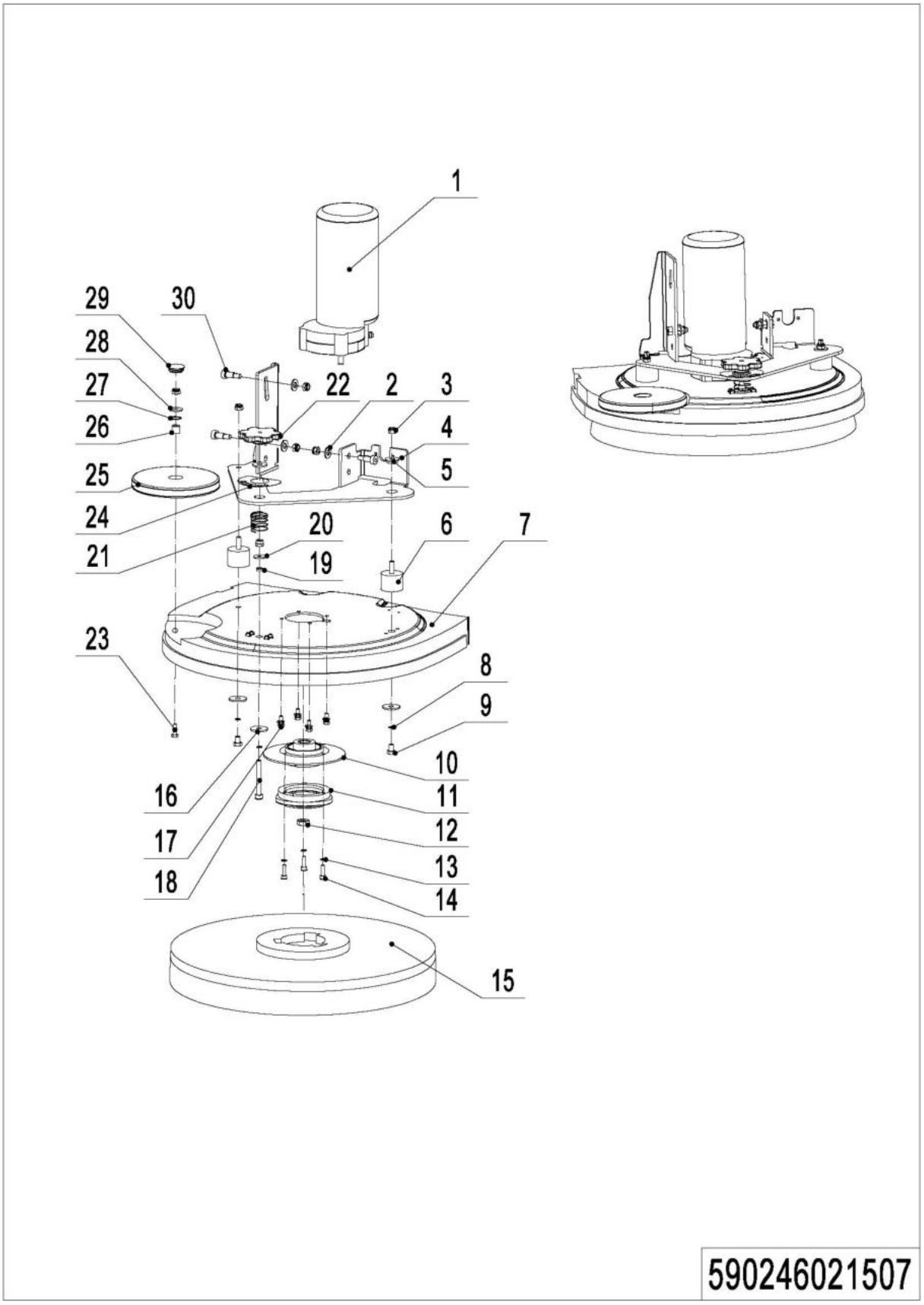

07 Brush System (590246021507)

No.	Item Code	Mark	Item Description	Qty.	Substitute	Note
1	590298520047		Brush Motor	1		
2	590198520081		Gasket	3		
3	590198520066		Nut M8	7		
4	590198520036		Fixed Bracket	1		
5	590298520007		Bushing	1		
6	590198520032		Absorber	2		
7	590198520006		Brush Cap	1		
8	590198520074		Spring Washer	3		
9	590198520082		Screw M8x16	2		
10	590198520045		Locator Plate	1		
11	590198520010		Brush Buckle	1		
12	590398520064		Nut M20	1		
13	590198520075		Spring Washer	3		
14	590198520084		Screw M6x20	3		
15	590398520092		Brush	1		
15	590398520093		Needle Disk	1		
16	590398520002		Gasket	3		
17	590298520038		Screw M6x14	4		
18	590498520069		Screw M8x65	1		
19	590298520034		Bushing	1		
20	590298520035		Washer	1		
21	590298520033		Spring	1		
22	590198520132		Knob	1		
23	590198520145		Screw M8x30	1		
24	590198520001		Label	1		
25	590198520016		Bumper Wheel	1		
26	590198520107		Spacer Bush	1		
27	590198520108		Gasket	1		
28	590198520109		Gasket	1		
29	590198520019		Cap	1		
30	590198520090		Screw M10x16	3		

Chapter 3: Electronic Control System

01 Control System (590246033001)

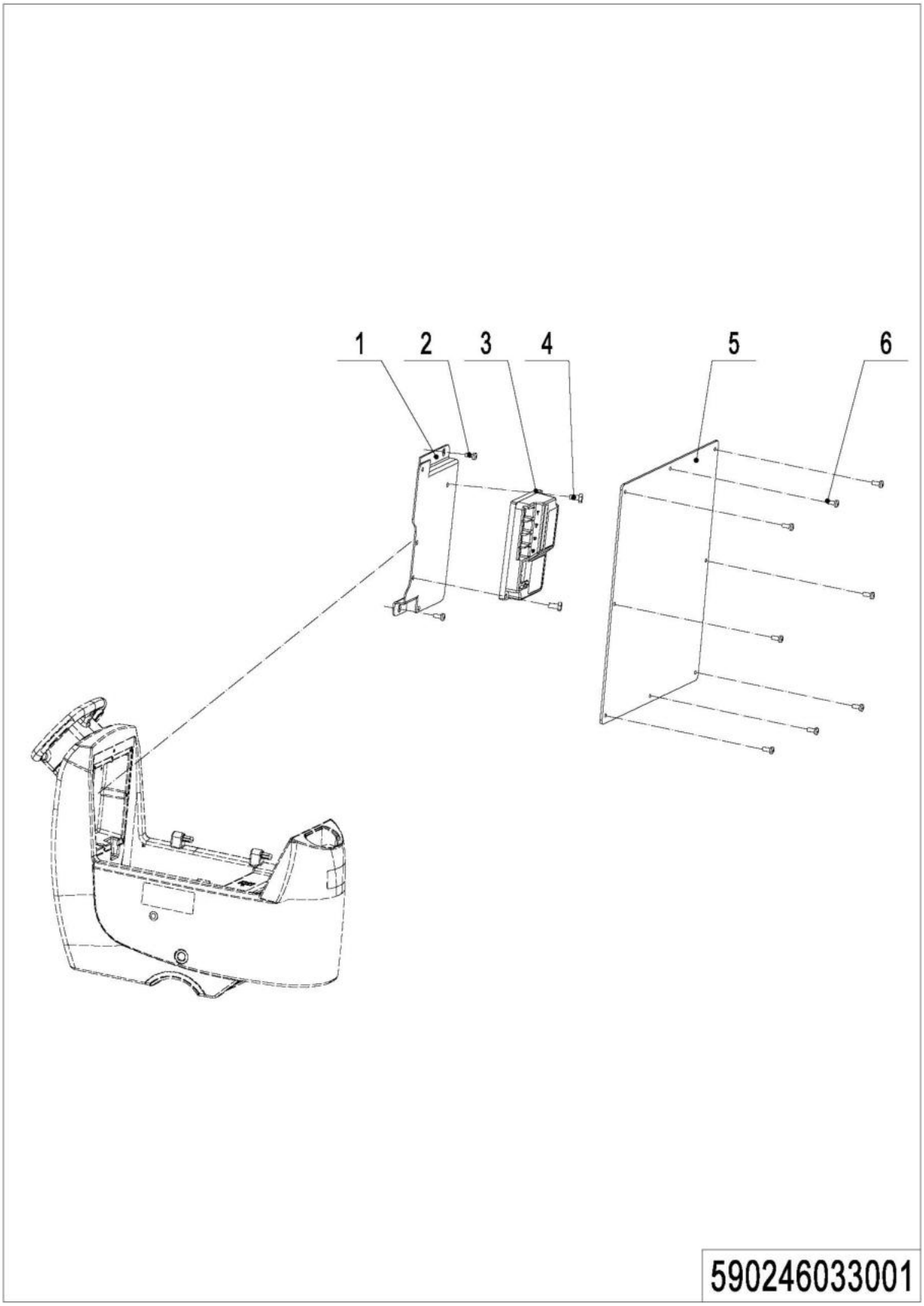

01 Control System (590246033001)

No.	Item Code	Mark	Item Description	Qty.	Substitute	Note
1	590298520009		Fixed Plate	1		
2	590198520093		Screw M5x12	2		
3	590298520046		Controller	1		
4	590498520082		Screw M5x30	2		
5	590298520008		Close Plate	1		
6	590198520093		Screw M5x12	8		

02 Wire Harness (Lead-acid battery) (590246033001)

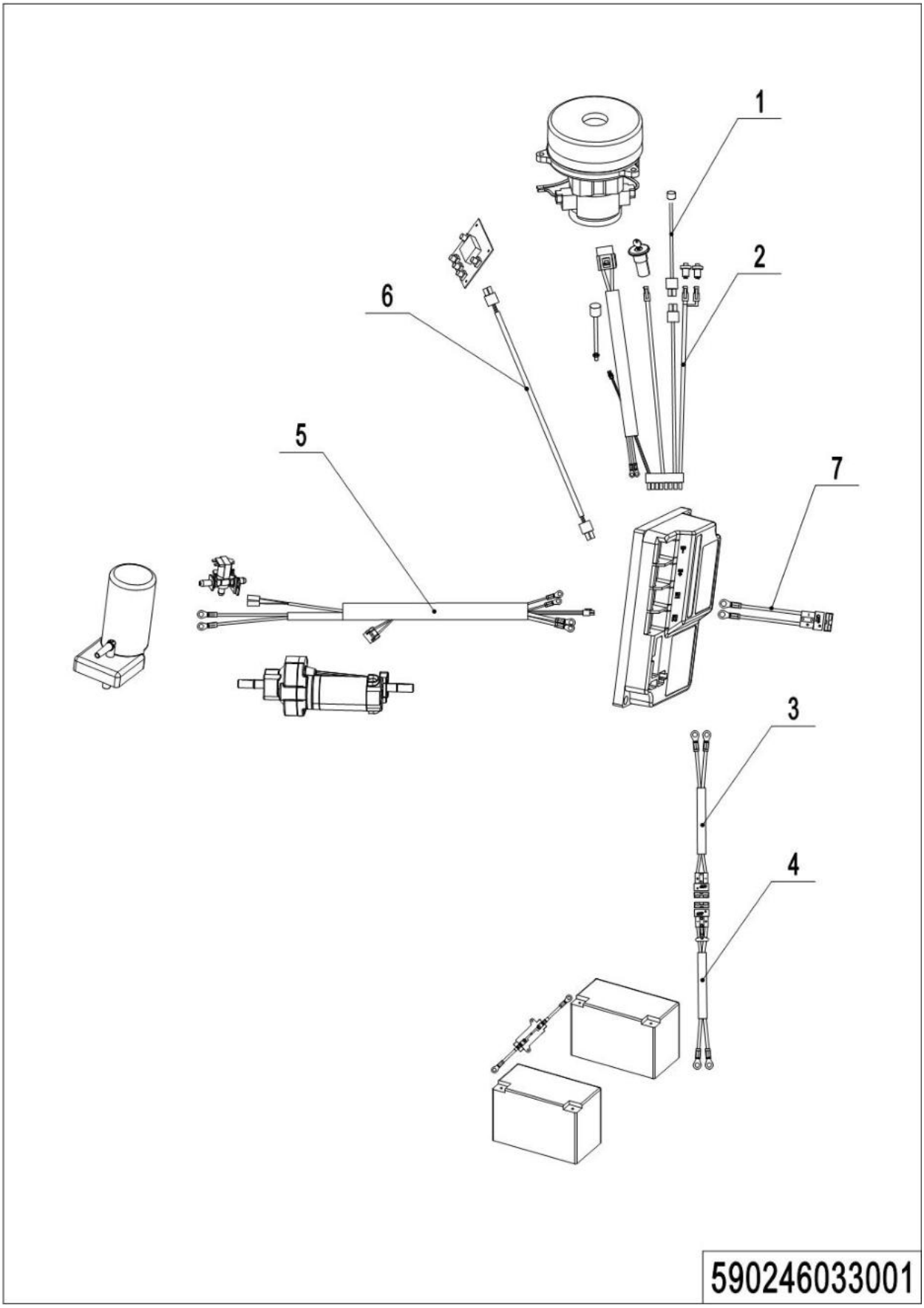

02 Wire Harness (Lead-acid battery) (590246033001)

No.	Item Code	Mark	Item Description	Qty.	Substitute	Note
1	590298520053		Connection Wire	1		
2	590298520049		Wire Harness	1		
3	590298520051		Power Cord	1		
4	590298520052		Wire Harness	1		
5	590298520050		Wire Harness	1		
6	590298520048		Signal Line	1		
7	590298520021		Wire Harness	1		

03 Wire Harness (Lithium battery) (590246033002)

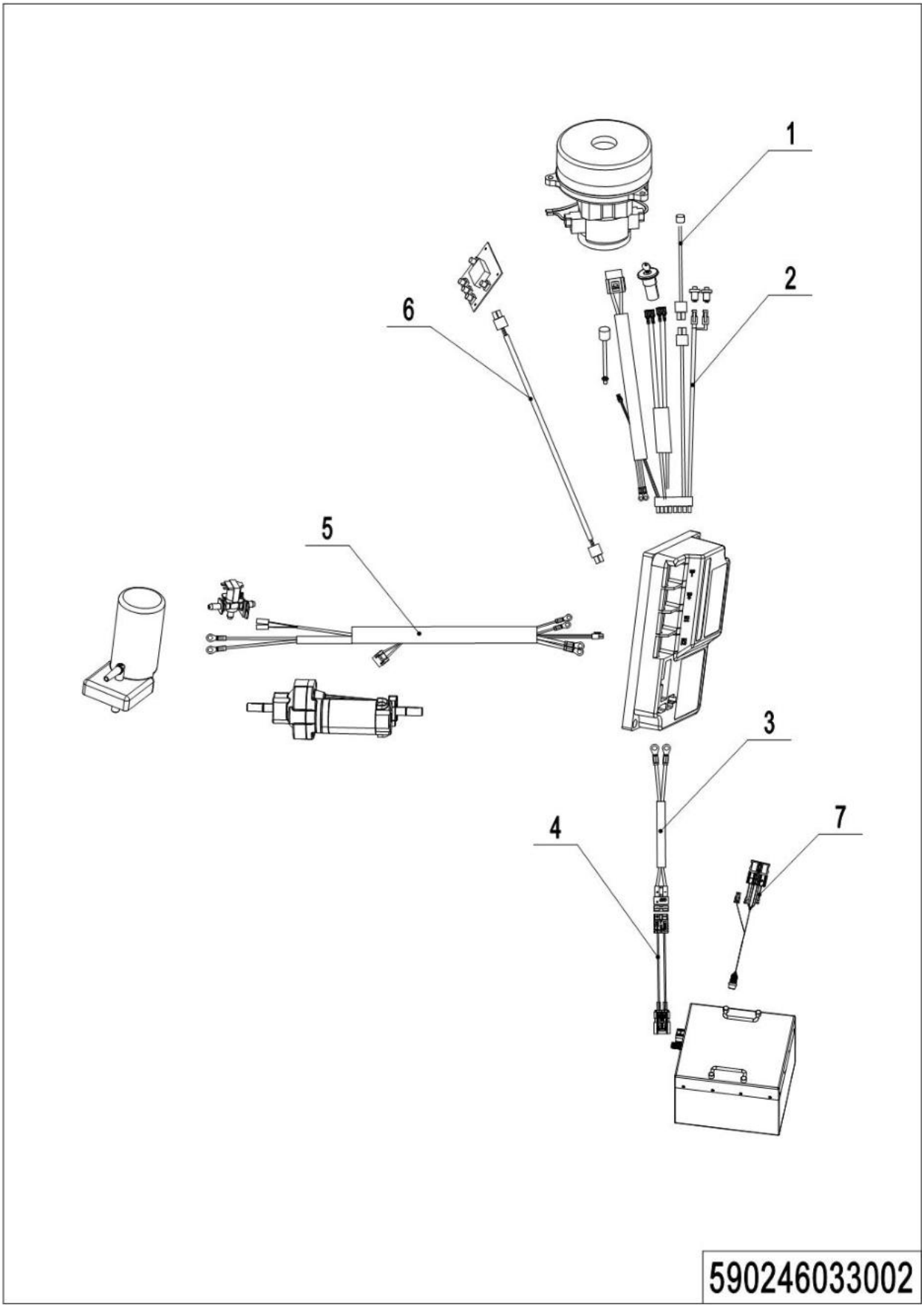

03 Wire Harness (Lithium battery) (590246033002)

No.	Item Code	Mark	Item Description	Qty.	Substitute	Note
1	590298520053		Connection Wire	1		For Li-battery
2	590298520049		Wire Harness	1		For Li-battery
3	590298520051		Power Cord	1		For Li-battery
4	590298520054		Wire Harness	1		For Li-battery
5	590298520050		Wire Harness	1		For Li-battery
6	590298520048		Signal Line	1		For Li-battery
7	590198520212		Wire Harness	1		For Li-battery

04 Traction Battery (590246037001)

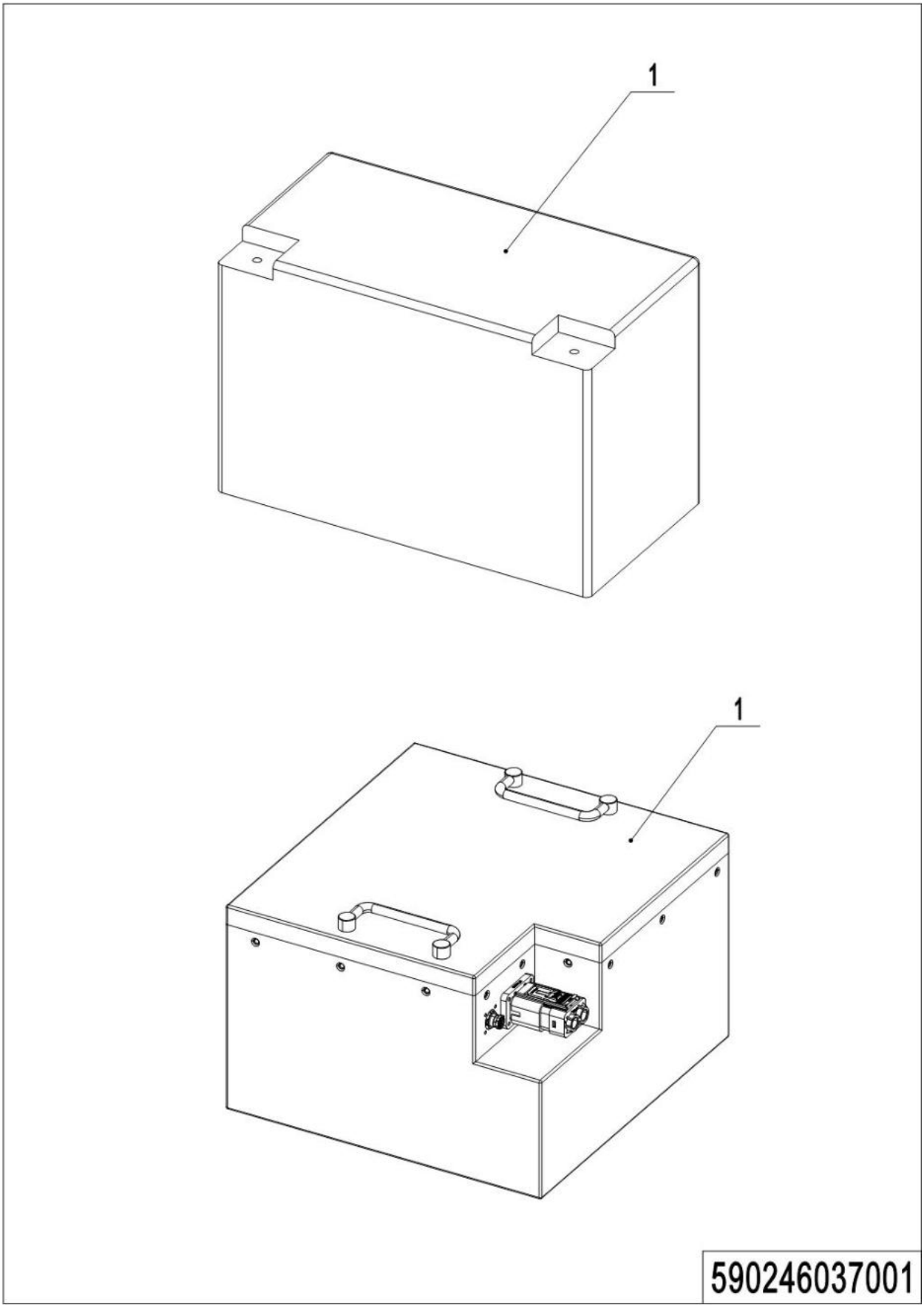

04 Traction Battery (590246037001)

No.	Item Code	Mark	Item Description	Qty.	Substitute	Note
1	590198520154		Battery 12V100Ah	2		
1	920600100756		Li-Battery 25.6V100Ah	1		For Li-battery

05 Charger (590246036501)

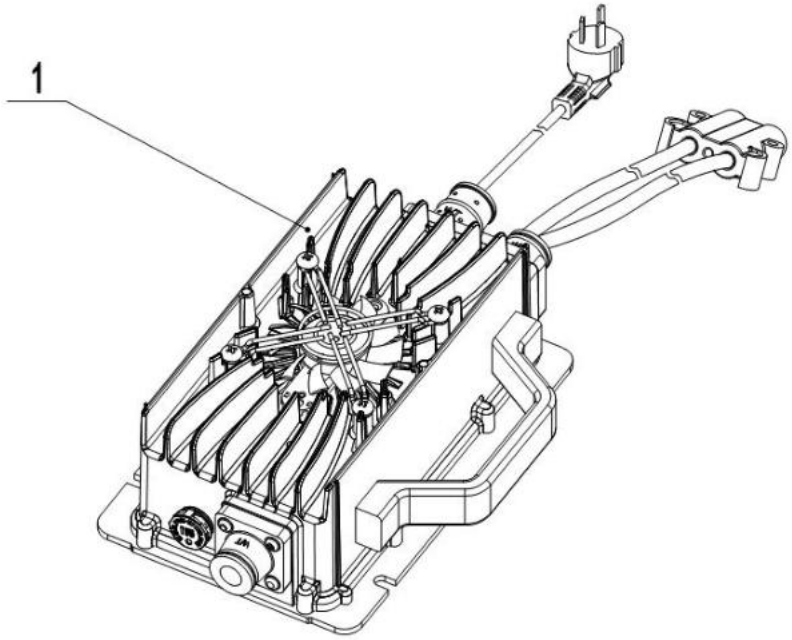

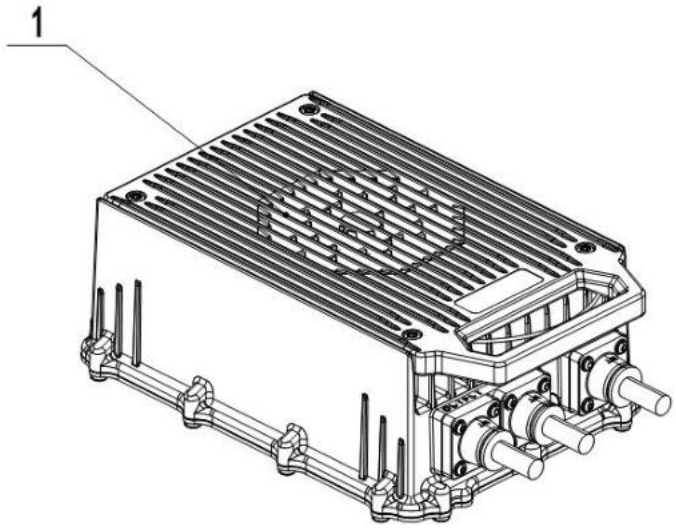

590246036501

05 Charger (590246036501)

No.	Item Code	Mark	Item Description	Qty.	Substitute	Note
1	590198520155		Charger 24V15A(Asia)	1		
1	590198520182		Charger 24V15A(ENG)	1		
1	590198520183		Charger 24V15A(USA)	1		
1	590198520184		Charger 24V15A(EU)	1		
1	590198520185		Charger 24V15A(AUS)	1		
1	590198520186		Charger 24V15A(ITA)	1		
1	590198520187		Charger 24V15A(CH)	1		
1	590198520188		Charger 24V15A(ISR)	1		
1	590198520189		Charger 24V15A(BRA)	1		
1	921000201216		Li-Charger 24V25A(Asia)	1		Single-phase 110-240V
1	921000201169		Li-Charger 24V25A(USA)	1		Single-phase 110-240V
1	921000201171		Li-Charger 24V25A(EU)	1		Single-phase 110-240V
1	921000201217		Li-Charger 24V25A(ENG)	1		Single-phase 110-240V
1	921000201218		Li-Charger 24V25A(AUS)	1		Single-phase 110-240V
1	921000201219		Li-Charger 24V25A(ITA)	1		Single-phase 110-240V
1	921000201220		Li-Charger 24V25A(CH)	1		Single-phase 110-240V
1	921000201221		Li-Charger 24V25A(ISR)	1		Single-phase 110-240V
1	921000201222		Li-Charger 24V25A(BRA)	1		Single-phase 110-240V
1	504636510000		Li-Charger 24V40A(Asia)	1		
1	504636510001		Li-Charger 24V40A(EU)	1		
1	504636510002		Li-Charger 24V40A(AUS)	1		
1	504636510003		Li-Charger 24V40A(ENG)	1		
1	504636510006		Li-Charger 24V40A(ITA)	1		
1	504636510007		Li-Charger 24V40A(CH)	1		
1	504636510008		Li-Charger 24V40A(ISR)	1		
1	504636510009		Li-Charger 24V40A(BRA)	1		
1	921000201141		Li-Charger 24V50A(USA)	1		UL, Single-phase 110V

Appendix

01 List Of Consumables

No.	Item Code	Item Description	Qty.	Chapter/ Section/ Number
1	590298520003	Wheel	1	Chapter 1/01/2
2	590198520060	Filter Foam	1	Chapter 2/01/42
3	590198520061	Sealing Strip	1	Chapter 2/02/1
4	590198520014	Floating Ball Cage	1	Chapter 2/02/2
5	590198520015	Floating Ball	1	Chapter 2/02/3
6	590198520064	Drain Hose	1	Chapter 2/02/5
7	590298520017	Drain Hose	1	Chapter 2/02/9
8	590198520058	Filter Foam	1	Chapter 2/02/19
9	590198520005	Universal Caster	1	Chapter 2/03/7
10	590198520156	Key Switch	1	Chapter 2/04/1
10*	590398520111	Key Switch	1	Chapter 2/04/1*
11	590198520032	Absorber	1	Chapter 2/07/6
12	590298520047	Brush Motor	1	Chapter 2/07/1
13	590198520045	Locator Plate	1	Chapter 2/07/10
14	590198520010	Brush Buckle	1	Chapter 2/07/11
15	590398520093	Needle Disk	1	Chapter 2/07/15
16	590198520140	Solenoid Valve	1	Chapter 2/05/2
17	590198520134	Filter	1	Chapter 2/05/4
18	590198520131	Bumper Wheel	1	Chapter 2/06/7
19	590198520026	Support Bracket	1	Chapter 2/06/22
20	590198520133	Wheel	1	Chapter 2/06/35
21	590198510003	Squeegee Kits	1	Chapter 2/06/38

1= Supply as package. 2= Supply with constraints. 3= Phasing-out supply. 4= Supply as assembly. 5= Check other tables.

02 Consumables List

No.	Item Code	Item Description	Qty.	Chapter/ Section/ Number
1	590198520160	Rear Blade	1	Chapter 2/06/11
2	590198520161	Front Blade	1	Chapter 2/06/32
3	590398520092	Brush	1	Chapter 2/07/15

1= Supply as package. 2= Supply with constraints. 3= Phasing-out supply. 4= Supply as assembly. 5= Check other tables.