Print Number：　　Print Date：

Floor Scrubber NB460

PARTS MANUAL

591246020101

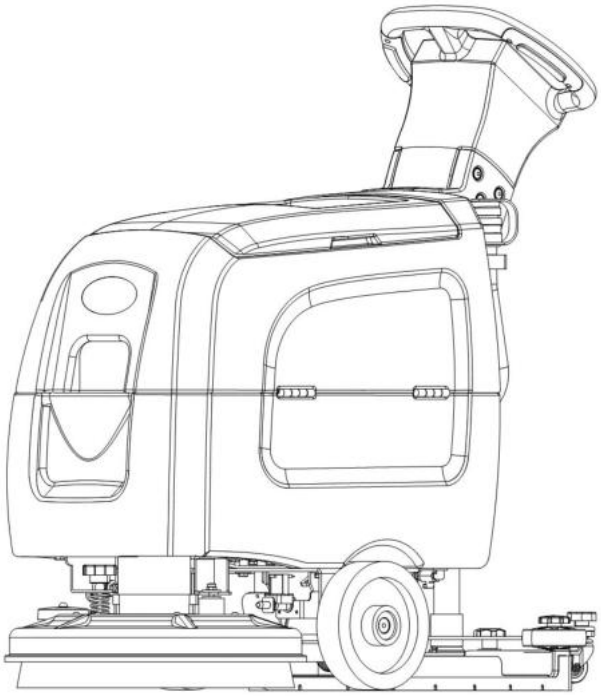

Version：V04

Truck Identification Number From：

Parts Manual

NB460-PM04EN

Please order spare parts from authorized dealers of our Company.

In order to avoid wrong delivery, all the orders for spare parts should specify the following items:

- Truck model, identification number and manufacture year.
- Orders for spare parts of mast, hydraulic transmission unit, steering axle, motor, etc. shall indicate the manufacture number of these parts.
- Codes for Our Company spare parts are shown in the table of parts manual. Please also pay attention to the description of supply status, order quantity, etc. (check the number listed in "Mark" column of the parts manual).

"Mark" Column:

The unmarked indicates the parts are in short supply cycle.

Number 1: supply as package. Indicating these that parts are small parts and seal parts, which are supplied in package unit and in short supply cycle.

Number 2: supply with constraints. Indicating that these spare parts are not in stock and will be prepared for production after receiving the order from customers, which are in long supply cycle.

Number 3: phasing-out supply. Indicating that these parts will be replaced by new parts due to technical improvements and the current stock will not be available when these parts run out. Please check the description of technical improvements notice.

Number 4: supply as assembly. Indicating that these parts are assembly parts defined by manufacture process, which cannot be supplied as a single part.

Number 5: check other tables.

This parts manual is the property of Our Company and can be shared under the confidential agreement only, Our Company has the right to claim for compensation of any unauthorized use. Copy without permission is not allowed.

Figures in the manual are not limited by the original design. our Company reserves the right to improve the products for continuous technology progress.

Table of Contents

Chapter 1: Body Structure 2
01 Chassis (591246021501) 2
02 Solution Tank (591246021502) 4
02 Solution Tank (591246021502) Continuation 6
03 Recovery Tank (591246021503) 8
04 Brush Cover (591246021504) 10
04 Brush Cover (591246021504) Continuation 12
05 Squeegee Assembly (591246021505) 14
06 Solution System (591246021506) 16
Chapter 2：Electronic Control System 18
01 Wire Harness (Lead-acid battery) (591246033001) 18
02 Wire Harness (Lithium battery) (591246033002) 20
03 Battery (591246037001) 22
04 Charger (591246036501) 24
Chapter 3：Others 26
01 Labels (591246047001) 26
Appendix 28
01 List of Consumables 28
02 Consumables List 29

1= Supply as package. 2= Supply with constraints. 3= Phasing-out supply. 4= Supply as assembly. 5= Check other tables.

Chapter 1: Body Structure

01 Chassis (591246021501)

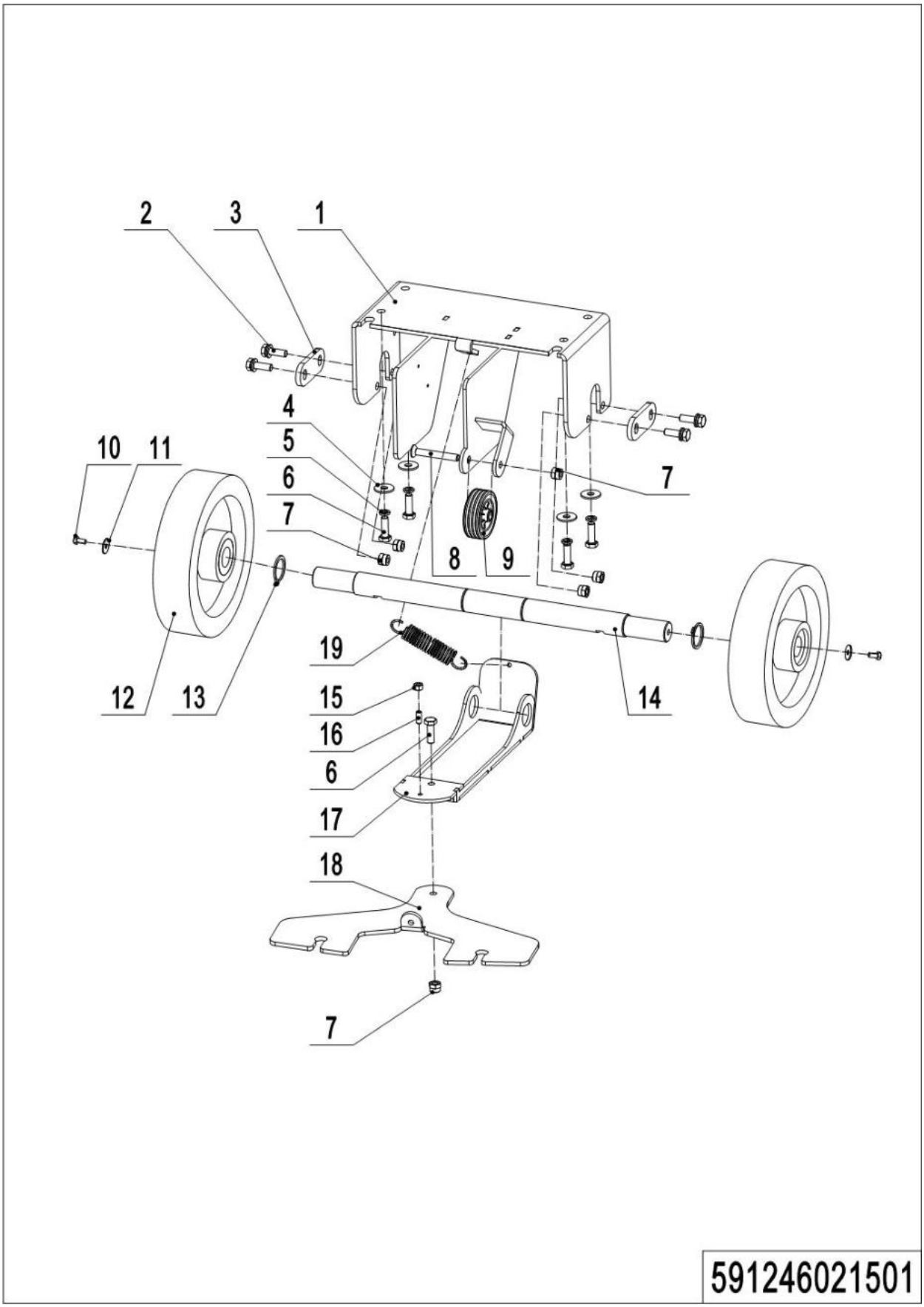

1= Supply as package. 2= Supply with constraints. 3= Phasing-out supply. 4= Supply as assembly. 5= Check other tables.

01 Chassis (591246021501)

No.	Item Code	Mark	Item Description	Qty.	Substitute	Note
1	591298520038		Chassis	1		
2	590398520049		Screw M8x25	4		
3	591298520033		Fixed Flat	2		
4	590198520109		Gasket	4		
5	590198520074		Spring Washer	4		
6	590198520100		Screw M8x25	5		
7	590198520066		Nut M8	5		
8	591298520052		Bolt M8x55	1		
9	590498520023		Bumper Wheel	1		
10	590198520104		Screw M8x16	2		
11	590198520103		Gasket	2		
12	590198520022		Wheel	2		
13	591298520051		Circlip	2		
14	591298520028		Wheel Shaft	1		
15	590198520071		Nut M6	1		
16	591298520053		Stud M6x16	1		
17	591298520029		Squeegee Holder	1		
18	591298520030		Squeegee Blade	1		
19	591298520054		Tension Spring	1		

1= Supply as package. 2= Supply with constraints. 3= Phasing-out supply. 4= Supply as assembly. 5= Check other tables.

02 Solution Tank (591246021502)

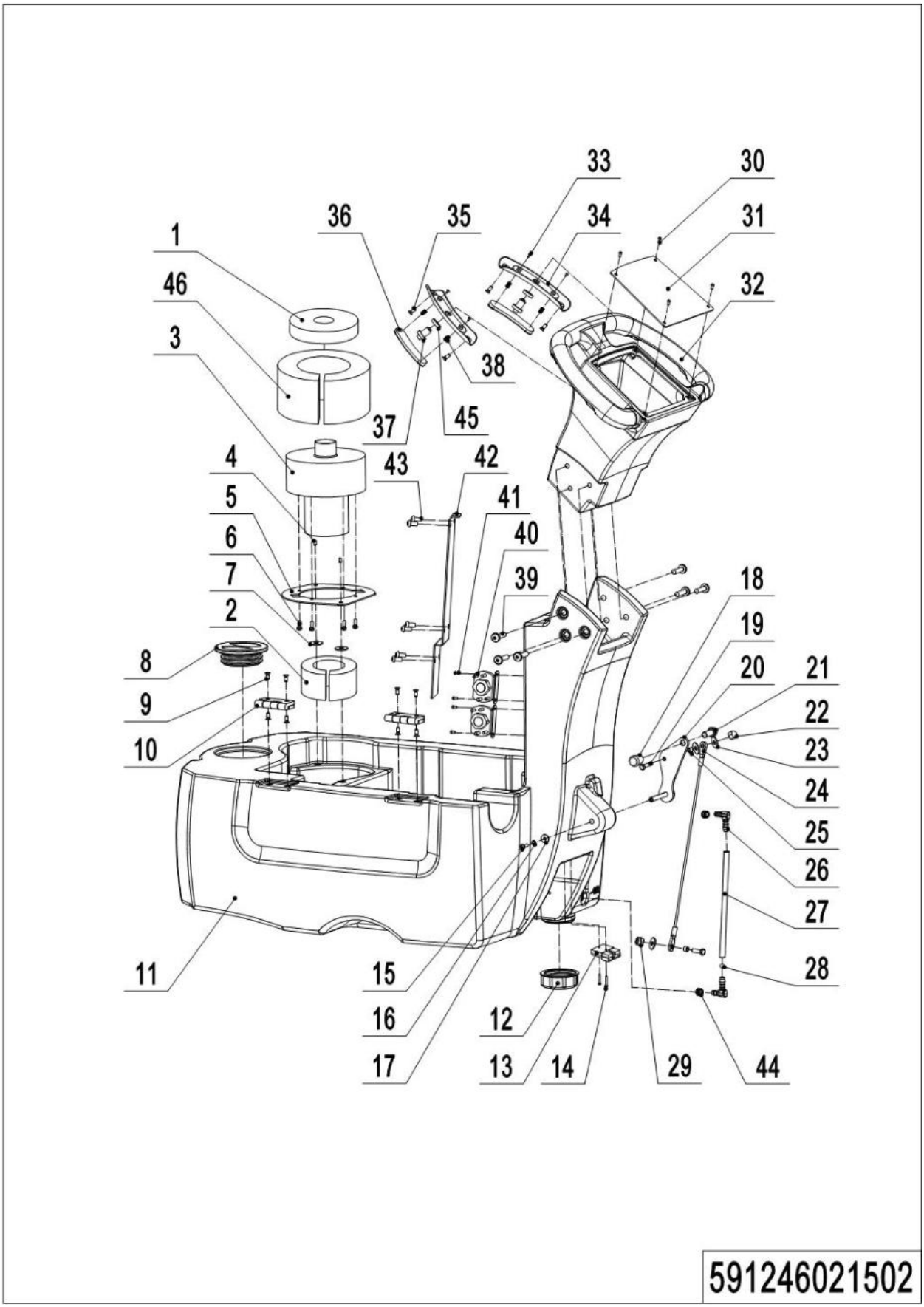

02 Solution Tank (591246021502)

No.	Item Code	Mark	Item Description	Qty.	Substitute	Note
1	591298520025		Gasket	1		
2	590198520056		Silencing Foam	2		
3	591298520046		Brushless Suction Motor	1		
4	590998520053		Screw M6x30	2		
5	591298520027		Fixed Plate	1		
6	591298520074		Screw M5x16	4		
7	591298520039		Rubber Gasket	2		
8	590398520007		Water Filling Cap	1		
9	590498520304		Screw M6x16	8		
10	590498520126		Hinge	2		
11	591298520017		Solution Tank	1		
12	590398520008		Drain Cap	1		
13	591298520047		Wire Harness	2		
14	590398520078		Screw M3x20	2		
15	590198520094		Screw M5x16	1		
16	590198520076		Spring Washer	1		
17	590198520078		Gasket	1		
18	590198520011		Tiller	1		
19	590198520084		Screw M6x20	2		
20	591298520032		Squeegee Handle	1		
21	591298520076		Screw M10x25	1		
22	590198520070		Nut M6	1		
23	590198520079		Gasket	4		
24	591298520057		Squeegee Rope	1		
25	590398520074		Spacer Bush	2		
26	590198520128		Right-angle Joint	2		
27	591298520077		Pipe	1		0.26
28	590198520130		Floating Ball	1		
29	590198520067		Nut M6	1		
30	590198520091		Screw M5x12	4		

1= Supply as package. 2= Supply with constraints. 3= Phasing-out supply. 4= Supply as assembly. 5= Check other tables.

02 Solution Tank (591246021502) Continuation

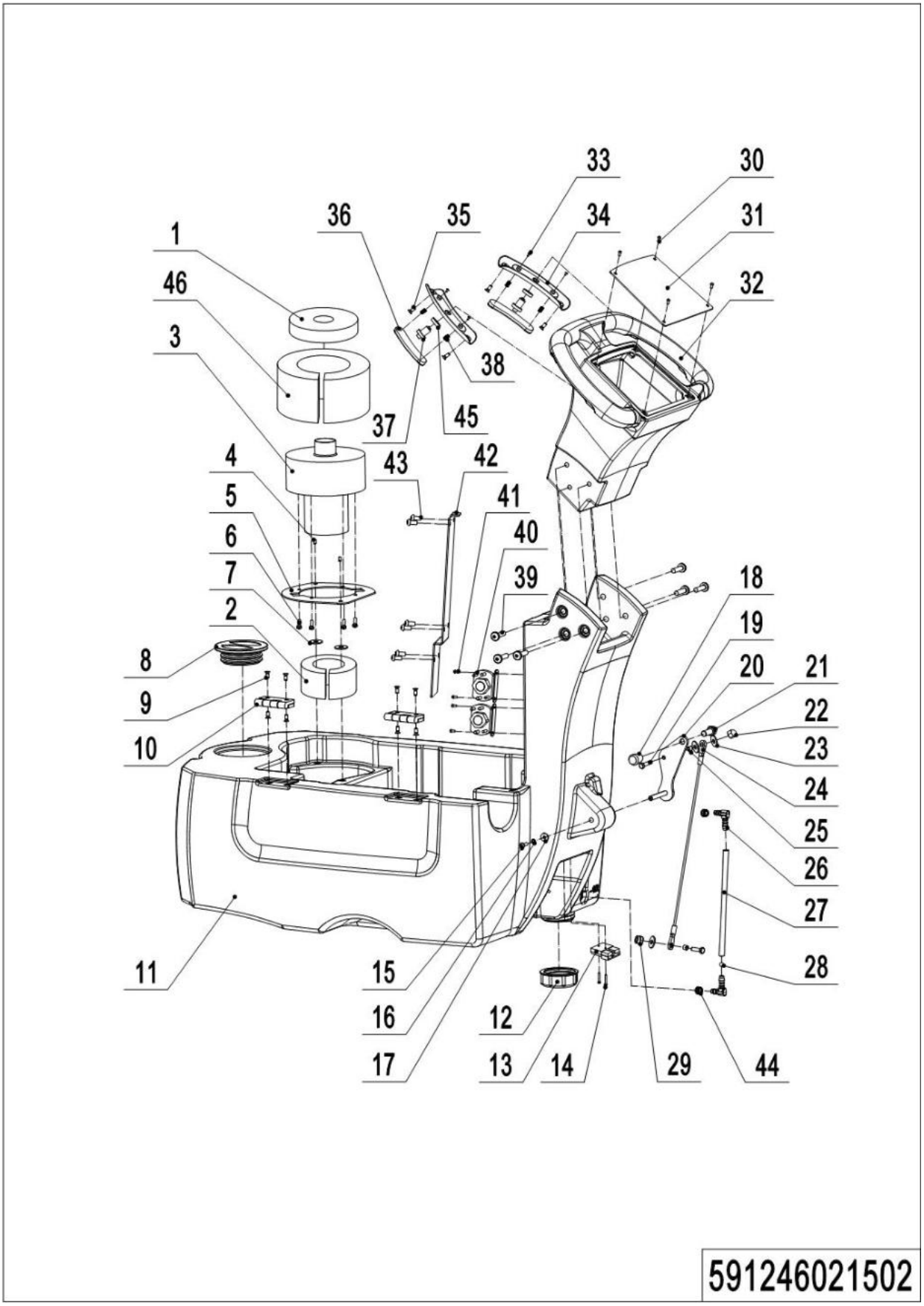

02 Solution Tank (591246021502) Continuation

No.	Item Code	Mark	Item Description	Qty.	Substitute	Note
31	591298520065		Electronic Control Board	1		
32	591298520020		Control Handle	1		
33	590298520032		Screw M3x10	4		
34	590298520005		Walk Switch Base	2		
35	590298520031		Screw M4x16	4		
36	590298520006		Walk Switch Cap	2		
37	590298520023		Walk Switch	2		
38	590298520011		Spring	2		
39	591298520058		Screw M8x30	6		
40	591298520043		Contactor	2		
41	590198520092		Screw M4x10	4		
42	591298520031		Electrical Cover Plate	1		
43	590198520191		Screw M5x8	6		
44	590198520136		Rubber Plug	2		
45	591298520062		Spacer Bush	2		
46	591298520075		Silencing Foam	1		

1= Supply as package. 2= Supply with constraints. 3= Phasing-out supply. 4= Supply as assembly. 5= Check other tables.

03 Recovery Tank (591246021503)

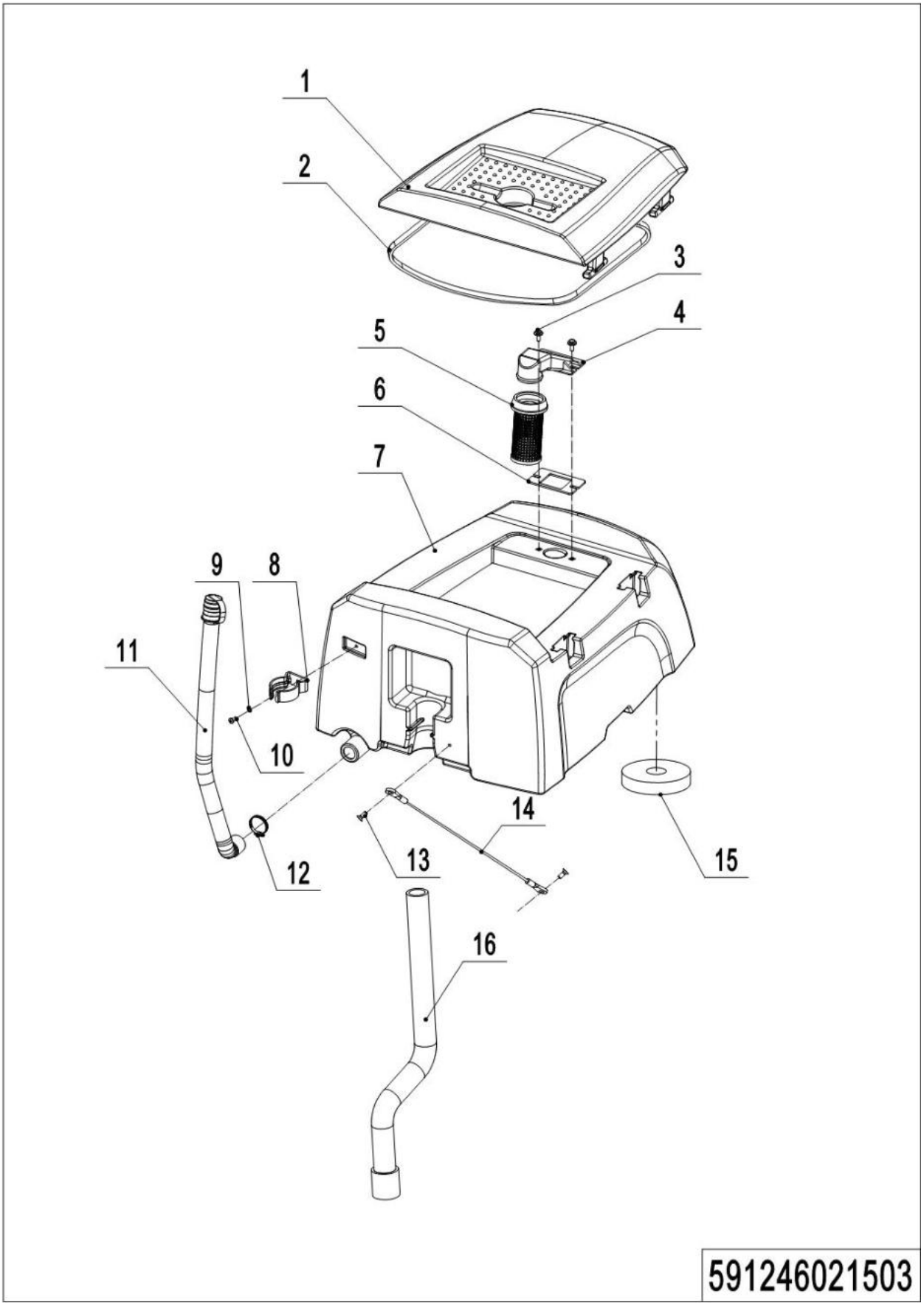

1= Supply as package. 2= Supply with constraints. 3= Phasing-out supply. 4= Supply as assembly. 5= Check other tables.

03 Recovery Tank (591246021503)

No.	Item Code	Mark	Item Description	Qty.	Substitute	Note
1	591298520019		Recovery Tank Cap	1		
2	591298520078		Sealing Strip	1		1.3m
3	590398520048		Screw M6x20	2		
4	591298520022		Floating Ball Cage Bracket	1		
5	591298520023		Floating Ball Cage	1		
6	591298520024		Gasket	1		
7	591298520018		Recovery Tank	1		
8	590198520018		Water Pipe Buckle	1		
9	590198520076		Spring Washer	1		
10	590198520093		Screw M5x12	1		
11	591298520040		Drain Hose	1		
12	590198520097		Hoop	1		
13	591298520073		Screw M5x10	2		
14	591298520056		Recovery Tank Rope	1		
15	591298520025		Gasket	1		
16	591298520041		Suction Pipe	1		

1= Supply as package. 2= Supply with constraints. 3= Phasing-out supply. 4= Supply as assembly. 5= Check other tables.

04 Brush Cover (591246021504)

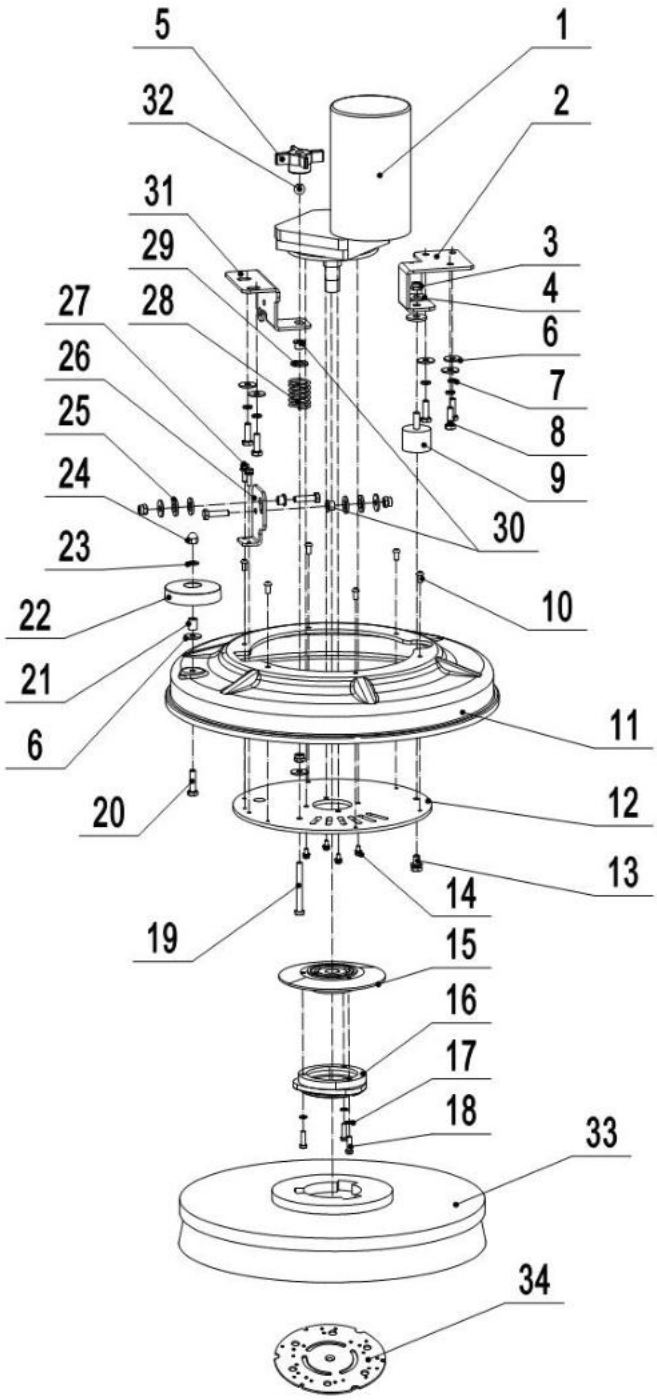

591246021504

04 Brush Cover (591246021504)

No.	Item Code	Mark	Item Description	Qty.	Substitute	Note
1	591298520042		Brush Motor	1		
2	591298520037		Brush Bracket (Left)	1		
3	590198520066		Nut M8	3		
4	590398520002		Gasket	2		
5	590198520132		Knob	1		
6	590198520109		Gasket	8		
7	590198520074		Spring Washer	5		
8	590198520100		Screw M8x25	5		
9	590198520032		Absorber	1		
10	591298520072		Screw M6x12	6		
11	591298520021		Brush Cover	1		
12	591298520026		Fixed Plate	1		
13	590398520057		Screw M8x16	1		
14	590198520142		Screw M6x16	4		
15	590198520045		Locator Plate	1		
16	590198520010		Brush Buckle	1		
17	590198520075		Spring Washer	3		
18	590198520087		Screw M6x20	3		
19	591298520059		Screw M8x70	1		
20	590198520145		Screw M8x30	3		
21	591298520071		Spacer Bush	1		
22	590798520159		Bumper Wheel	1		
23	590198520117		Washer	1		
24	590398520062		Nut M8	1		
25	590198520028		Nylon Washer	4		
26	591298520036		Brush Bracket (Right)	1		
27	590398520048		Screw M6x20	2		
28	590298520033		Spring	1		
29	590398520085		Gasket	1		
30	590398520074		Spacer Bush	3		

1= Supply as package. 2= Supply with constraints. 3= Phasing-out supply. 4= Supply as assembly. 5= Check other tables.

04 Brush Cover (591246021504) Continuation

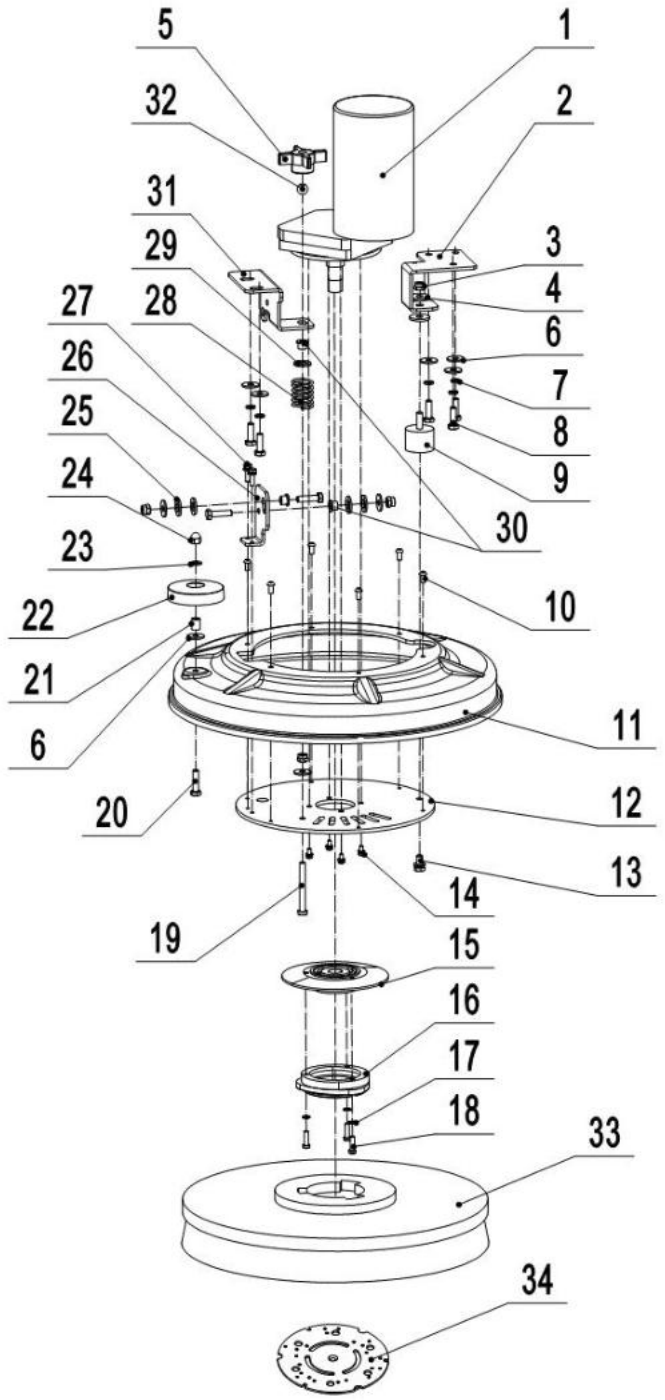

591246021504

04 Brush Cover (591246021504) Continuation

No.	Item Code	Mark	Item Description	Qty.	Substitute	Note
31	591298520034		Fixed Plate	1		
32	591298520055		Ball	1		
33	591298520001		Spring Buckle	1		
33	591298520002		Spring Buckle	1		
34	590198520220		Locating buckle	1		

05 Squeegee Assembly (591246021505)

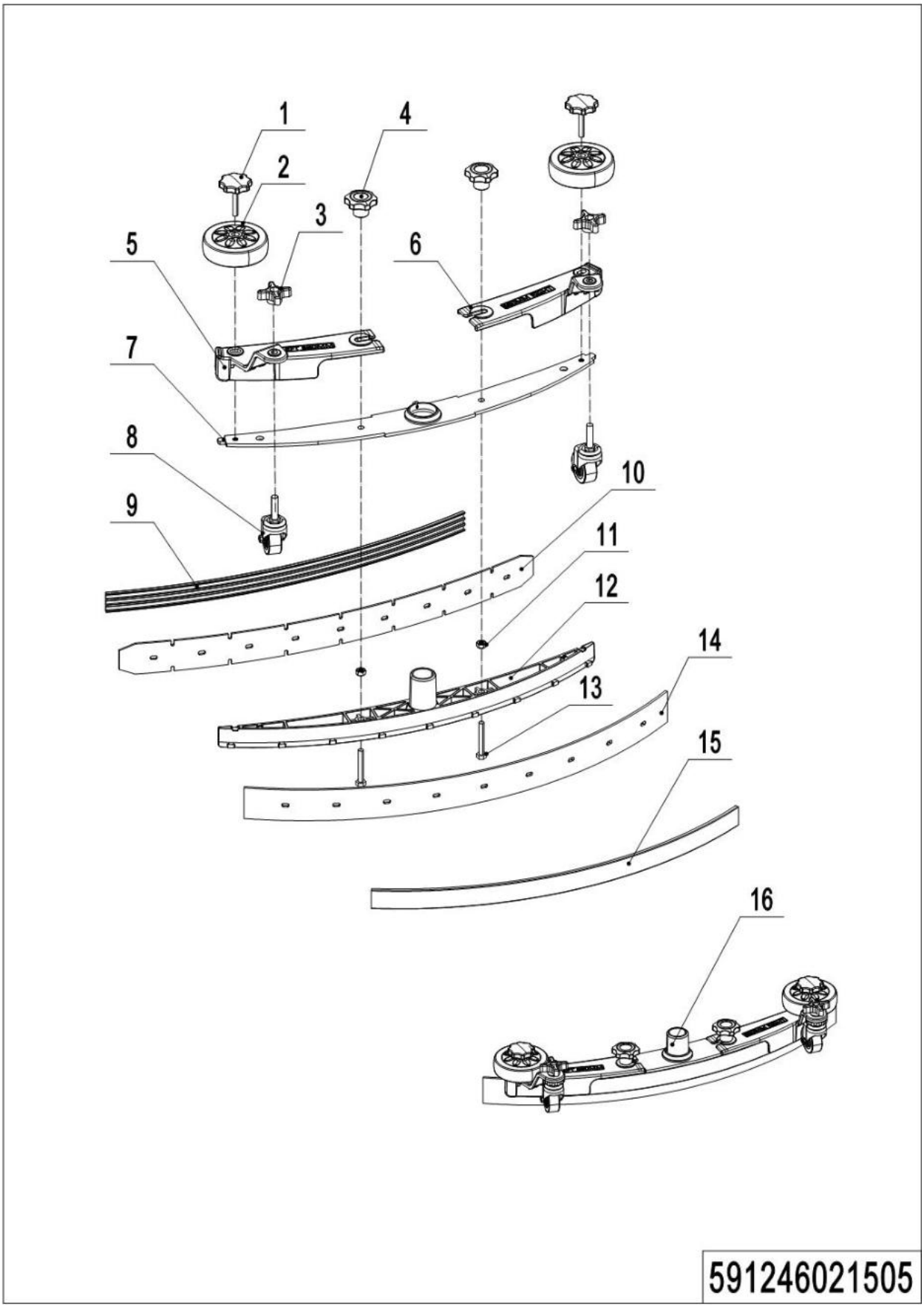

1= Supply as package. 2= Supply with constraints. 3= Phasing-out supply. 4= Supply as assembly. 5= Check other tables.

05 Squeegee Assembly (591246021505)

No.	Item Code	Mark	Item Description	Qty.	Substitute	Note
1	591298520014		Screw M8x45	2		
2	590798520060		Bumper Wheel	2		
3	591298520006		Knob	2		
4	591298520007		Knob	2		
5	591298520009		Wheel Bracket (Left)	1		
6	591298520010		Wheel Bracket (Right)	1		
7	591298520011		Cap	1		
8	591298520016		Wheel	2		
9	591298520012		Front Batten	1		
10	591298520081		Front Blade (NR)	1		
11	590198520066		Nut M8	2		
12	591298520008		Squeegee	1		
13	591298520015		Screw M8x55	2		
14	591298520082		Rear Blade (NR)	1		
15	591298520013		Rear Batten	1		
16	591298520004		Squeegee Assembly	1		

1= Supply as package. 2= Supply with constraints. 3= Phasing-out supply. 4= Supply as assembly. 5= Check other tables.

06 Solution System (591246021506)

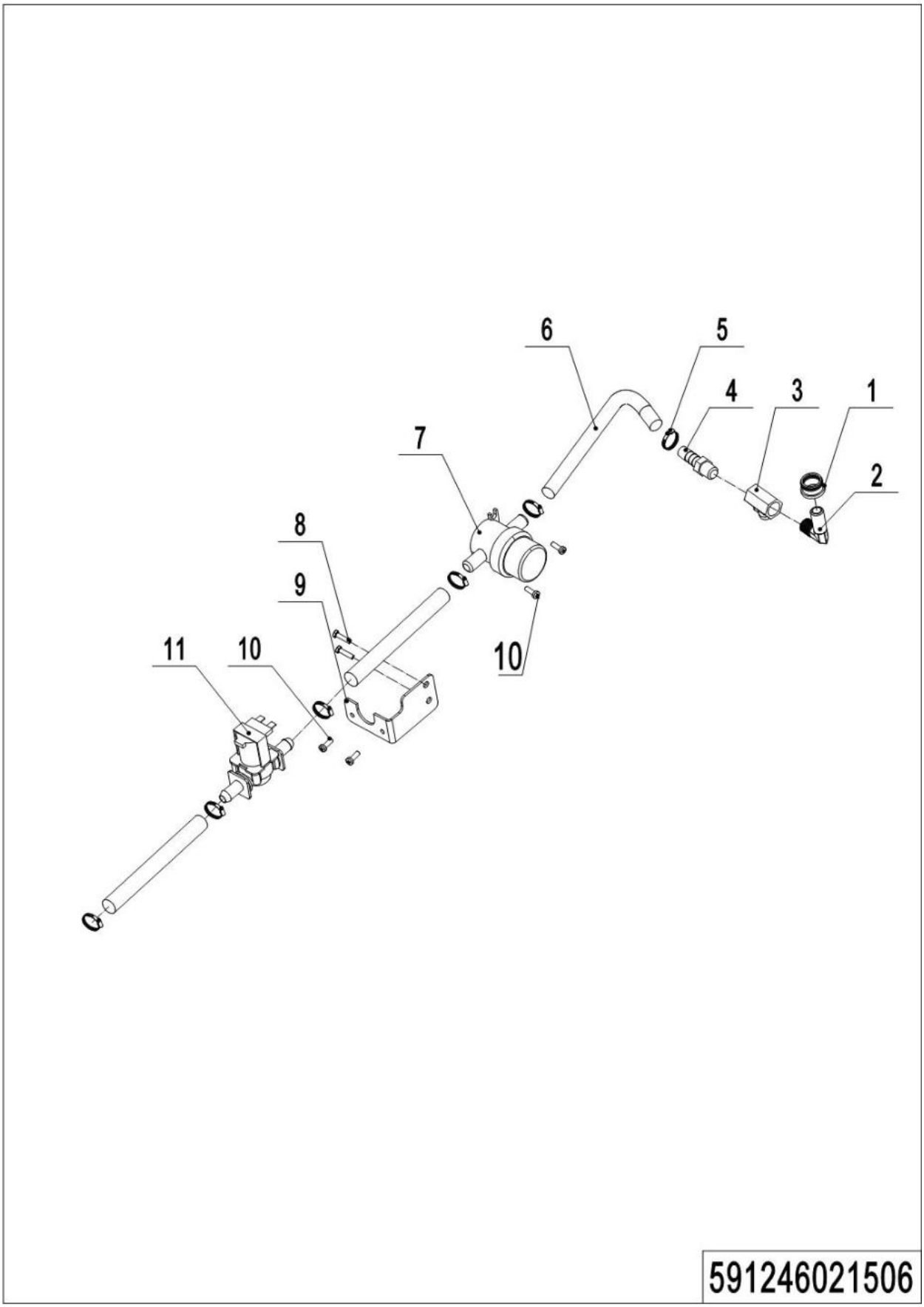

1= Supply as package. 2= Supply with constraints. 3= Phasing-out supply. 4= Supply as assembly. 5= Check other tables.

06 Solution System (591246021506)

No.	Item Code	Mark	Item Description	Qty.	Substitute	Note
1	590298520015		Rubber Plug	1		
2	590198510012		Connectors	1		
3	590198520147		Valve	1		
4	590198510013		Connectors	1		
5	590198520096		Hoop	6		
6	591298520079		Water Pipe	1		0.58m
7	590198520134		Filter	1		
8	590298520038		Screw M6x14	2		
9	591298520035		Fixed Sheet Metal	1		
10	590198520092		Screw M4x10	4		
11	590198520140		Solenoid Valve	1		

1= Supply as package. 2= Supply with constraints. 3= Phasing-out supply. 4= Supply as assembly. 5= Check other tables.

Chapter 2：Electronic Control System

01 Wire Harness (Lead-acid battery) (591246033001)

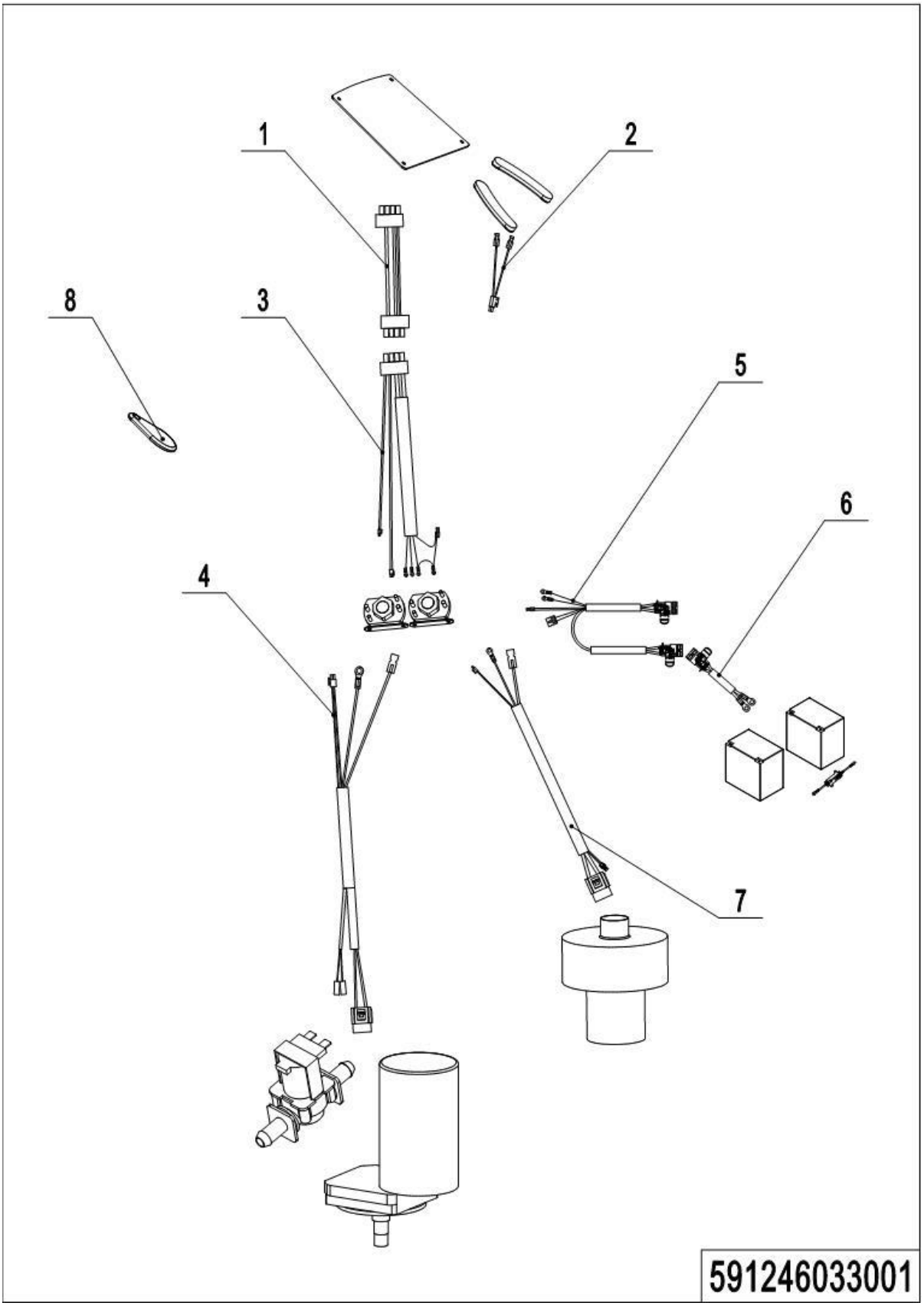

1= Supply as package. 2= Supply with constraints. 3= Phasing-out supply. 4= Supply as assembly. 5= Check other tables.

01 Wire Harness (Lead-acid battery) (591246033001)

No.	Item Code	Mark	Item Description	Qty.	Substitute	Note
1	591298520050		Wire Harness	1		
2	591298520044		Wire Harness	1		
3	591298520045		Wire Harness	1		
4	591298520049		Wire Harness	1		
5	591298520047		Power Cord	1		
6	590198510004		Battery Cable	1		
7	591298520048		Wire Harness	1		
8	591298520086		NFC Key	1		

02 Wire Harness (Lithium battery) (591246033002)

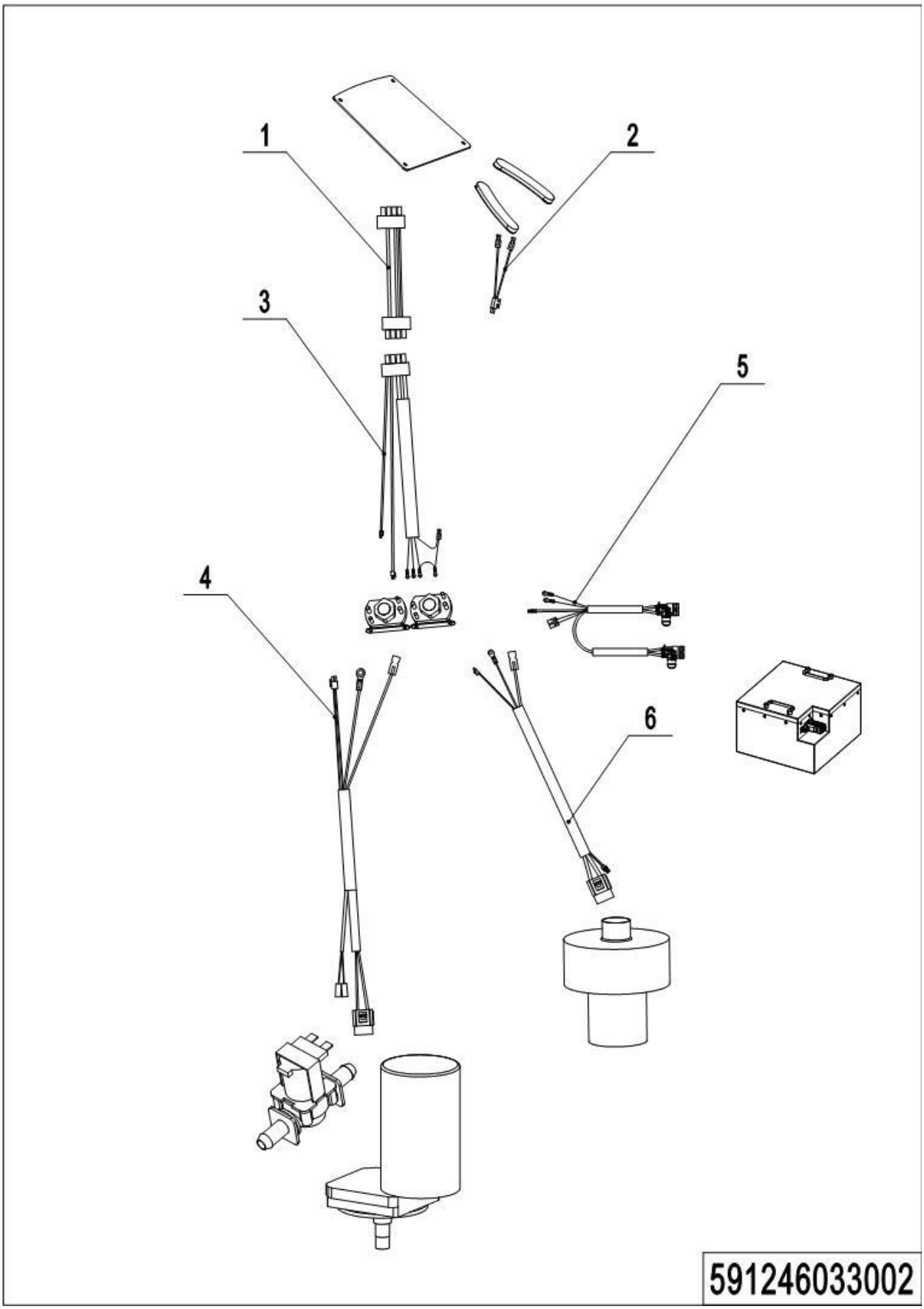

1= Supply as package. 2= Supply with constraints. 3= Phasing-out supply. 4= Supply as assembly. 5= Check other tables.

02 Wire Harness (Lithium battery) (591246033002)

No.	Item Code	Mark	Item Description	Qty.	Substitute	Note
1	591298520050		Wire Harness	1		
2	591298520044		Wire Harness	1		
3	591298520045		Wire Harness	1		
4	591298520049		Wire Harness	1		
5	591298520047		Power Cord	1		
6	591298520048		Wire Harness	1		

03 Battery (591246037001)

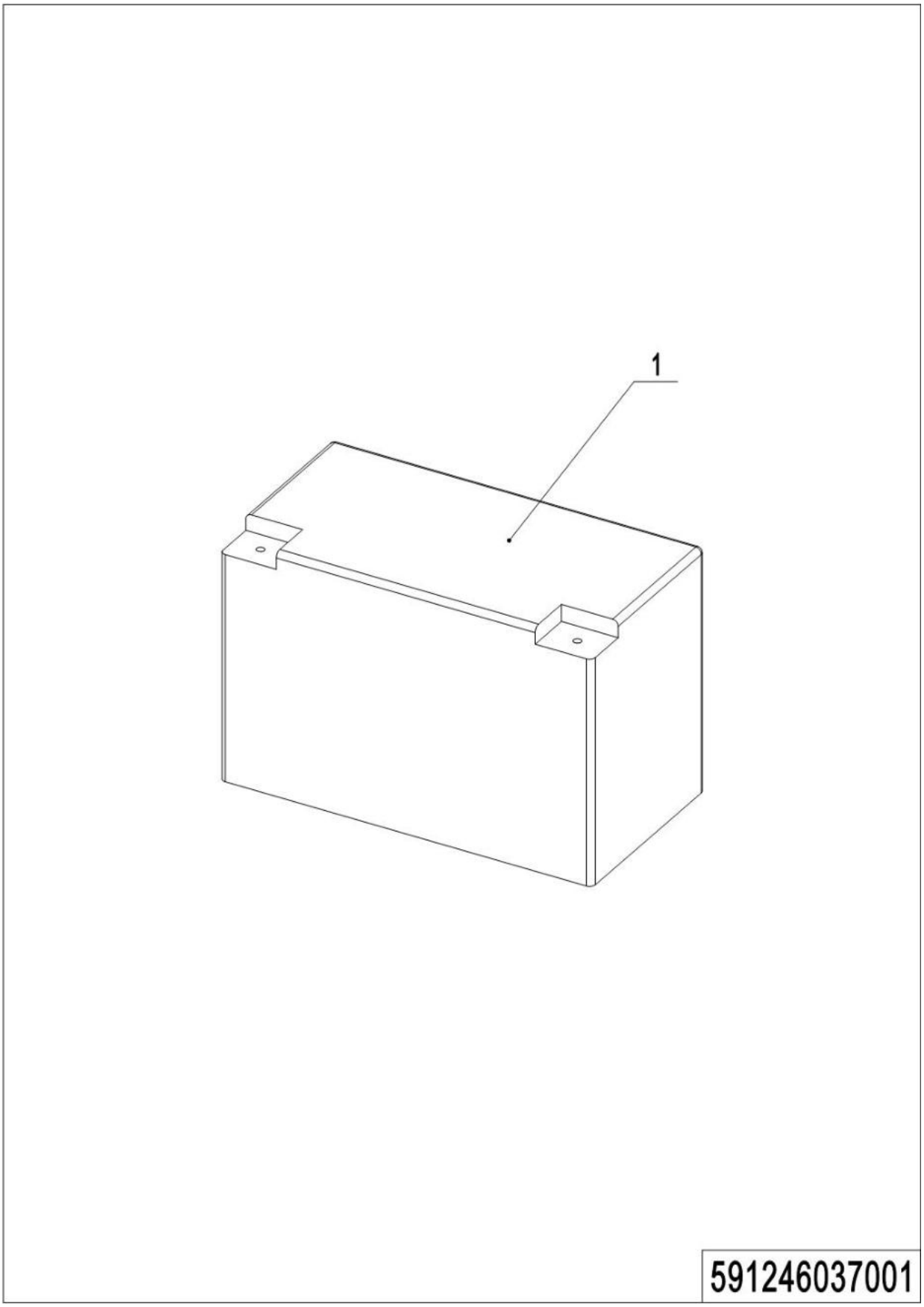

1= Supply as package. 2= Supply with constraints. 3= Phasing-out supply. 4= Supply as assembly. 5= Check other tables.

02 Battery (591246037001)

No.	Item Code	Mark	Item Description	Qty.	Substitute	Note
1	590198520154		Battery 12V100Ah	2		
1	591298520083		Li-battery 24V100Ah	1		For Li-battery

1= Supply as package. 2= Supply with constraints. 3= Phasing-out supply. 4= Supply as assembly. 5= Check other tables.

04 Charger (591246036501)

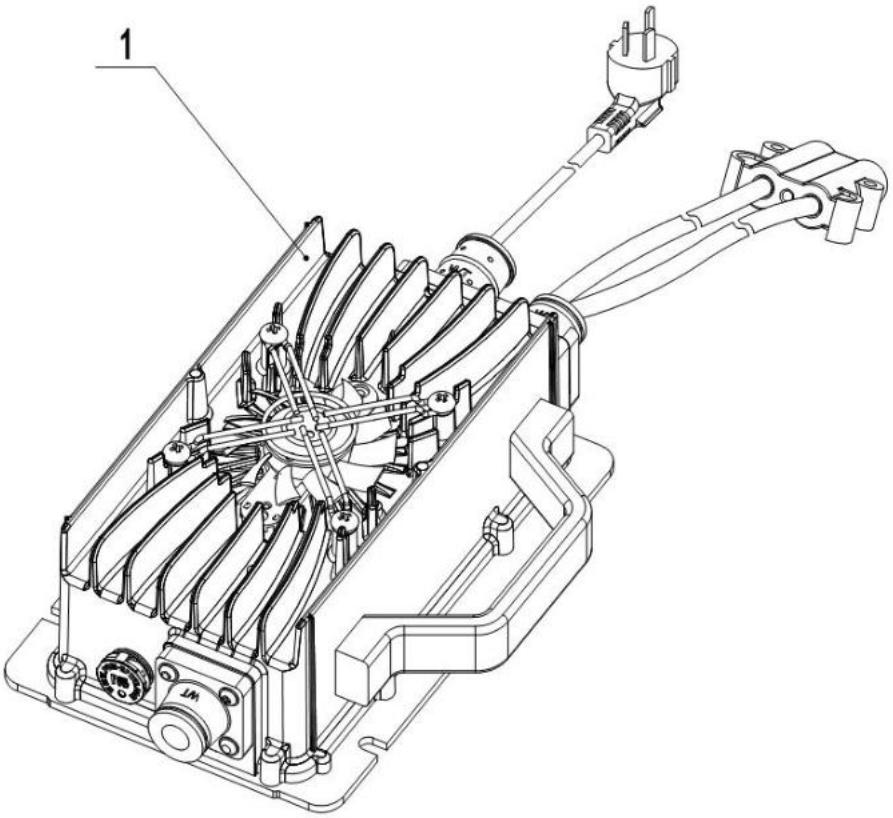

591246036501

1= Supply as package. 2= Supply with constraints. 3= Phasing-out supply. 4= Supply as assembly. 5= Check other tables.

04 Charger (591246036501)

No.	Item Code	Mark	Item Description	Qty.	Substitute	Note
1	590198520155		Charger 24V15A(Asia)	1		
1	590198520182		Charger 24V15A(ENG)	1		
1	590198520183		Charger 24V15A(USA)	1		
1	590198520184		Charger 24V15A(EU)	1		
1	590198520185		Charger 24V15A(AUS)	1		
1	590198520186		Charger 24V15A(ITA)	1		
1	590198520187		Charger 24V15A(CH)	1		
1	590198520188		Charger 24V15A(ISR)	1		
1	590198520189		Charger 24V15A(BRA)	1		
1	591298520082		Li-Charger 24V15A(Asia)	1		For Li-battery
1	591298520083		Li-Charger 24V15A(EU)	1		For Li-battery
1	591298520084		Li-Charger 24V15A(EU)	1		For Li-battery
1	591298520085		Li-Charger 24V15A(ENG)	1		For Li-battery

1= Supply as package. 2= Supply with constraints. 3= Phasing-out supply. 4= Supply as assembly. 5= Check other tables.

Chapter 3：Others

01 Labels (591246047001)

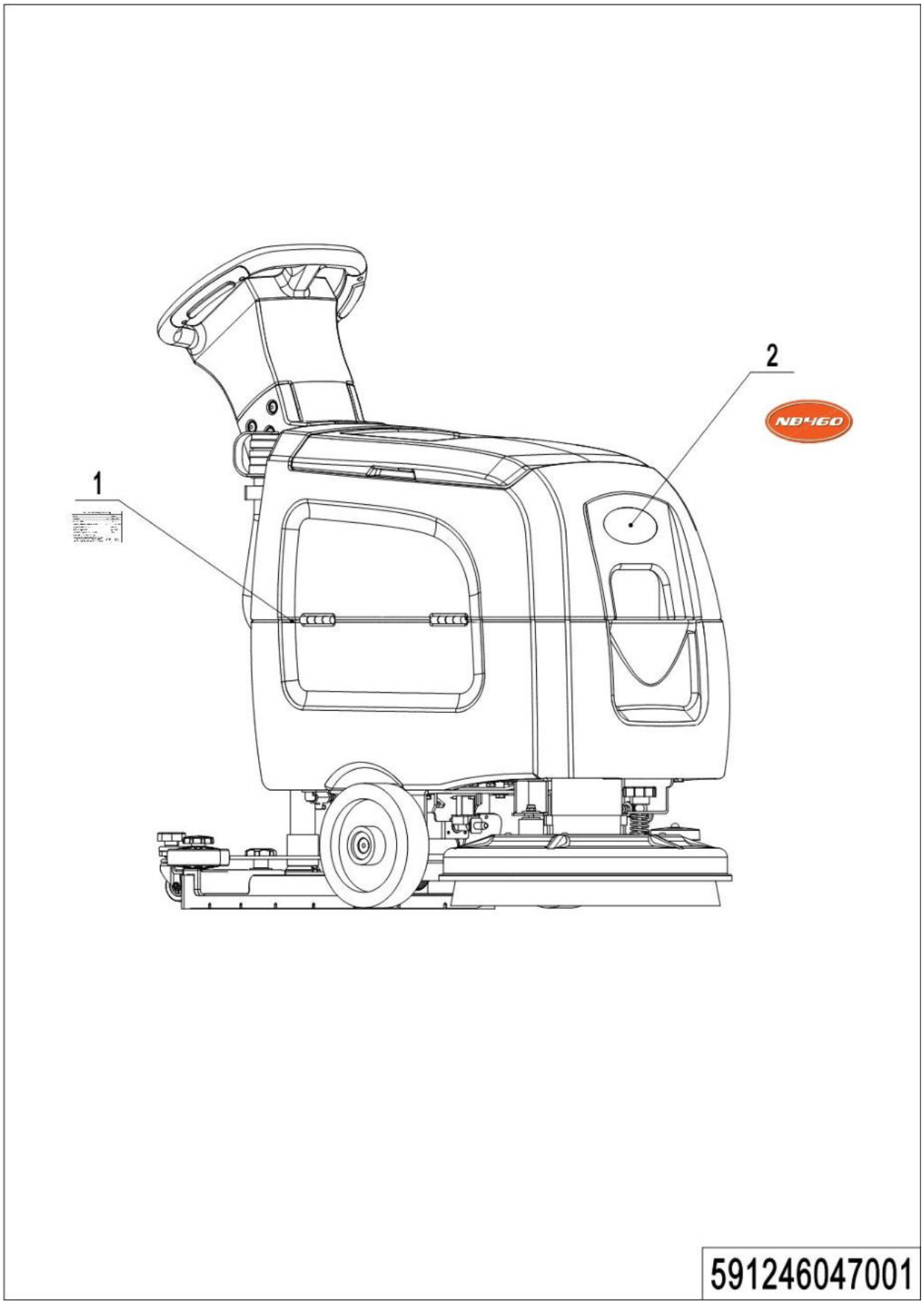

1= Supply as package. 2= Supply with constraints. 3= Phasing-out supply. 4= Supply as assembly. 5= Check other tables.

01 Labels (591246047001)

No.	Item Code	Mark	Item Description	Qty.	Substitute	Note
1	591298520080		Identification Plate	1		
2	591247020000		Label (NB460)	1		

1= Supply as package. 2= Supply with constraints. 3= Phasing-out supply. 4= Supply as assembly. 5= Check other tables.

Appendix

01 List of Consumables

No.	Item Code	Item Description	Qty.	Chapter/ Section/ Number
1	590498520023	Bumper Wheel	1	Chapter 1/01/2
2	590198520022	Wheel	2	Chapter 1/01/12
3	591298520025	Gasket	1	Chapter 1/02/1
4	590198520056	Silencing Foam	1	Chapter 1/02/2
5	591298520046	Brushless Suction Motor	1	Chapter 1/02/3
6	590498520126	Hinge	2	Chapter 1/02/10
7	591298520057	Squeegee Rope	2	Chapter 1/02/24
8	591298520065	Electronic Control Board	1	Chapter 1/02/31
9	591298520075	Silencing Foam	1	Chapter 1/02/46
10	591298520078	Sealing Strip	1	Chapter 1/03/2
11	591298520022	Floating Ball Cage Bracket	1	Chapter 1/03/4
12	591298520023	Floating Ball Cage	1	Chapter 1/03/5
13	591298520024	Gasket	1	Chapter 1/03/6
14	590198520018	Water Pipe Buckle	1	Chapter 1/03/8
15	591298520040	Drain Hose	1	Chapter 1/03/11
16	591298520056	Recovery Tank Rope	1	Chapter 1/03/14
17	591298520041	Suction Pipe	1	Chapter 1/03/16
18	591298520042	Brush Motor	1	Chapter 1/04/01
19	590198520032	Absorber	1	Chapter 1/04/09
20	590198520045	Locator Plate	1	Chapter 1/04/15
21	590198520010	Brush Buckle	1	Chapter 1/04/16
22	590798520060	Bumper Wheel	2	Chapter 1/05/2
23	590198520134	Filter	1	Chapter 1/06/7
24	590198520140	Solenoid Valve	1	Chapter 1/06/11

1= Supply as package. 2= Supply with constraints. 3= Phasing-out supply. 4= Supply as assembly. 5= Check other tables.

02 Consumables List

No.	Item Code	Item Description	Qty.	Chapter/ Section/ Number
1	591298520001	Spring Buckle	1	Chapter 1/04/33
1	591298520002	Spring Buckle	1	Chapter 1/04/33
2	591298520081	Front Blade (NR)	1	Chapter 1/05/10
3	591298520082	Rear Blade (NR)	1	Chapter 1/05/14

1= Supply as package. 2= Supply with constraints. 3= Phasing-out supply. 4= Supply as assembly. 5= Check other tables.