Print Number: Print Date:

NOBLELIFT

Scan QR Code for More

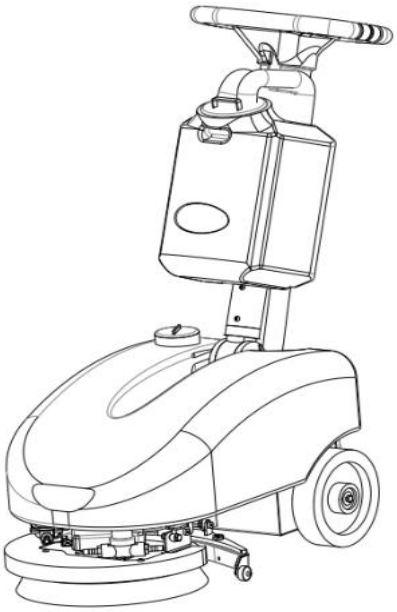

Walk-behind scrubber

NB380

Parts Manual

590946010101

Version V02

Scrubber Identification Number From:

Parts Manual NB380-PM02EN

Please order parts from authorized dealers of Noblelift Intelligent Equipment Co., LTD.

In order to avoid wrong delivery, all the orders for spare parts should specify the following items:

- Truck model, identification number and manufacture year.
- Orders for spare parts of mast, hydraulic transmission unit, steering axle, motor, etc. shall indicate the manufacture number of these parts.
- Codes for Noblelift spare parts are shown in the table of parts manual. Please also pay attention to the description of supply status, order quantity, etc. (check the number listed in "Mark" column of the parts manual).

"Mark" Column:

The unmarked indicates the parts are in short supply cycle.

Number 1: supply as package. Indicating these that parts are small parts and seal parts, which are supplied in package unit and in short supply cycle.

Number 2: supply with constraints. Indicating that these spare parts are not in stock and will be prepared for production after receiving the order from customers, which are in long supply cycle.

Number 3: phasing-out supply. Indicating that these parts will be replaced by new parts due to technical improvements and the current stock will not be available when these parts run out. Please check the description of technical improvements notice.

Number 4: supply as assembly. Indicating that these parts are assembly parts defined by manufacture process, which cannot be supplied as a single part.

Number 5: check other tables.

This parts manual is the property of Noblelift and can be shared under the confidential agreement only, Noblelift has the right to claim for compensation of any unauthorized use. Copy without permission is not allowed. Figures in the manual are not limited by the original design. Noblelift Intelligent Equipment Co., LTD reserves the right to improve the products for continuous technology progress.

Table of Contents

Chapter 1：Body Structure....1
01 Truck Frame (590946021501) 1
01 Truck Frame (590946021501) Continuation....3
02 Aluminum Rod (590946021502) 5
02 Aluminum Rod (590946021502) Continuation 7
03 Brush Disc (590946021503) 9
04 Water Scraper (590946021504) 11
05 Waterway (590946021505)....13
06 Recovery Tank (590946021506)....15
Chapter 2：Electrical Systems 17
01 Battery (590946037001) 17
02 Charger (590946036501) 19
03 Harness Assembly (590946033001) 21
Chapter 3：Other....23
01 Signs (590947020001) 23
Appendix....25
01 Electrical Schematics (590946045501) 25
02 List Of Wear Parts....26
03 List Of Consumables....27

Chapter 1：Body Structure

01 Truck Frame (590946021501)

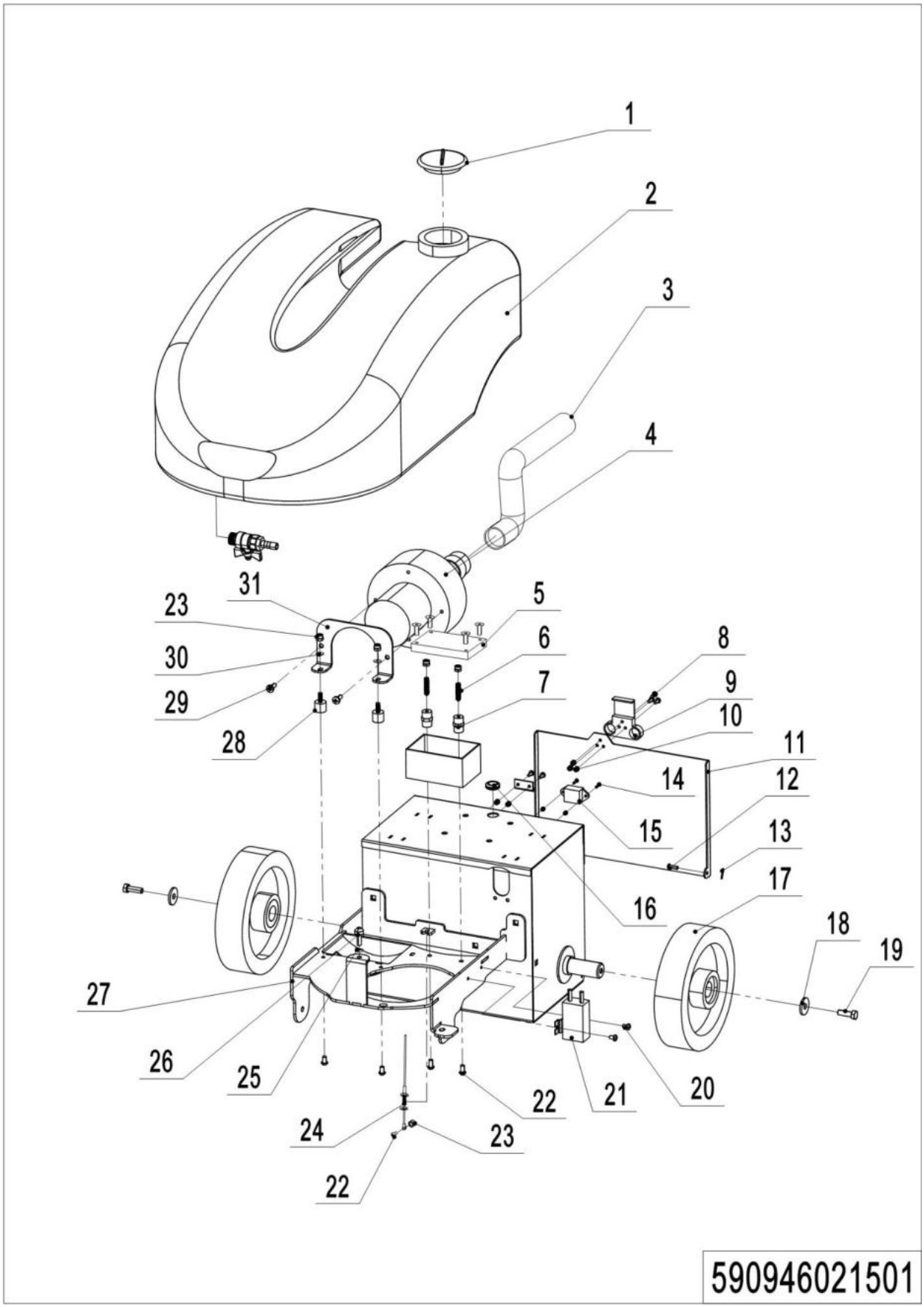

1= Supply as package. 2= Supply with constraints. 3= Phasing-out supply. 4= Supply as assembly. 5= Check other tables.

01 Truck Frame (590946021501)

No.	Item Code	Mark	Item Description	Qty.	Substitute	NOTE
1	590998520000		Clear Water Tank Lid	1		
2	590998520001		Solution Tank	1		
3	590998520002		Pipettes1KS0020+KS0045	1		1.23m
4	590198510011		Brushless Suction Motor	1		
5	590998520007		Electrical Box	1		
6	590998520008		Set The Screws	2		
7	590998520009		Insulator	2		
8	590198520092		Phillips Screws M4×10	5		
9	590998520003		Butterfly Lock	1		
10	590498520079		Nut Hex Self Locking M4	5		
11	590998520004		Battery Cover Plate	1		
12	590998520006		Pin Shaft 5*10	2		
13	590998520005		Cotter Pins 2*20	2		
14	590998520010		Flat Machine Screws	2		
15	590998520011		Charging Product Header	1		
16	590998520012		Coil Guard 14/17	2		
17	590198520022		Wheel	2		
18	590198520103		Gasket	2		
19	590198520104		Flat Machine Screws	2		
20	590198520191		Phillips Screws M5*8	2		
21	590198510010		DC Relays	1		
22	590998520014		Allen Screws M6*12	5		
23	590198520067		Nut Hex Self Locking M6	5		
24	590998520013		Wire Rope Pulling	1		
25	590198520122		Thin Nuts M8	1		
26	590998520017		Anti-Vibration Screws	1		
27	590998520016		Truck Frame	1		
28	590998520018		Shock Absorber	2		
29	590998520019		PB Self-Tapping Screws	2		
30	590198520079		Flat Pad M6	2		

1= Supply as package. 2= Supply with constraints. 3= Phasing-out supply. 4= Supply as assembly. 5= Check other tables.

01 Truck Frame (590946021501) Continuation

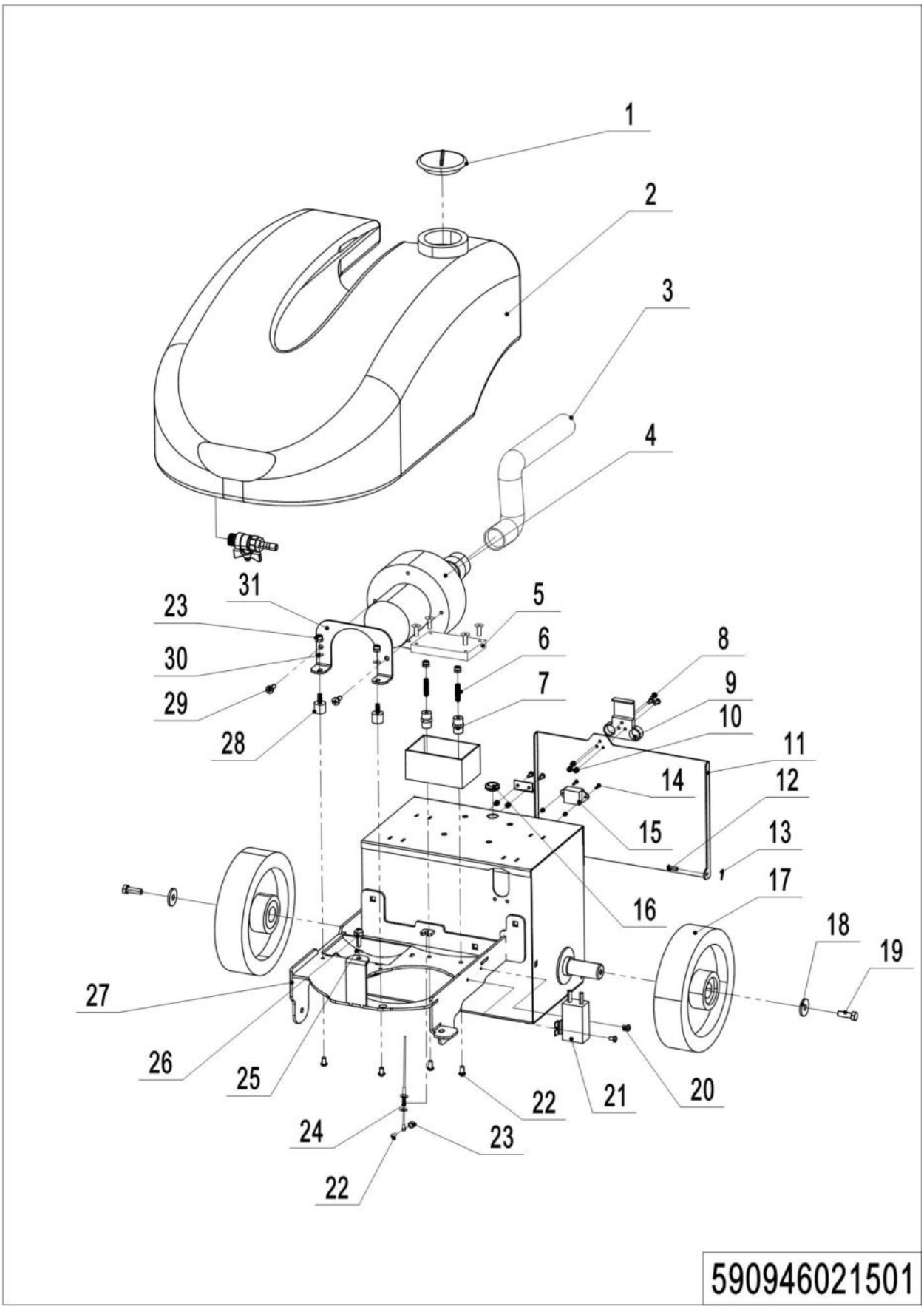

01 Truck Frame (590946021501) Continuation

No.	Item Code	Mark	Item Description	Qty.	Substitute	Note
31	590998520020		Secure The Plate	1		

1= Supply as package. 2= Supply with constraints. 3= Phasing-out supply. 4= Supply as assembly. 5= Check other tables.

02 Aluminum Rod (590946021502)

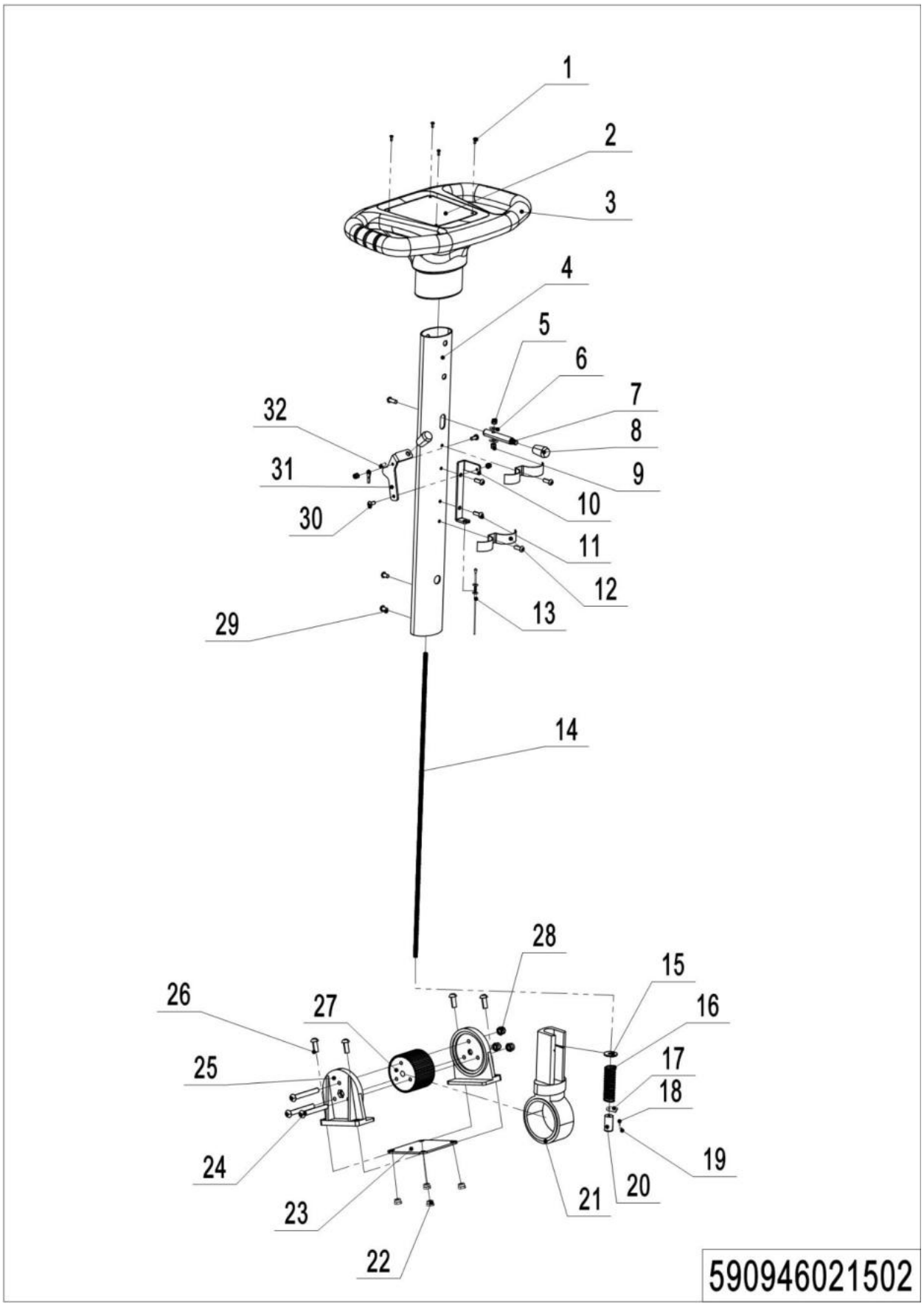

1= Supply as package. 2= Supply with constraints. 3= Phasing-out supply. 4= Supply as assembly. 5= Check other tables.

02 Aluminum Rod (590946021502)

No.	Item Code	Mark	Item Description	Qty.	Substitute	Note
1	590998520059		Self-Tapping Screws	4		
2	590998520060		Circuit Board	1		
3	590998520061		Handle	1		
4	590998520062		Aluminum Rod	1		
5	590198520068		Nut Hex Self Locking M5	3		
6	590198520078		Flat Gaskets	2		
7	590998520064		Lifting Rod	1		
8	590998520065		Handlebar M8*28	2		
9	590998520066		M5 Nut	1		
10	590998520067		Wire Rope Bracket	1		
11	590998520072		Allen Round Screws	7		
12	590998520069		Hose Snap	2		
13	590998520013		Wire Rope Pulling	1		
14	590998520073		Lead Screw M5*580	1		
15	590198520080		Gasket 10*30*2.5	1		
16	590998520075		Press Spring	1		
17	590998520074		Tableting	1		
18	590998520076		Key	1		
19	590998520077		Hollow Pins 4*10	1		
20	590998520078		Spur Gears	1		
21	590998520079		Aluminum Rod Hinge	1		
22	590198520066		Nut Hex Self Locking M8	4		
23	590998520084		Reinforcement Plates	1		
24	590998520080		Allen Screws M6*65	3		
25	590998520081		Aluminum Rod Bracket	2		
26	590998520082		Allen Screws M8*25	4		
27	590998520083		Round Gears	1		
28	590198520067		Nut Hex Self Locking M6	3		
29	590998520014		Allen Screws M6*12	2		
30	590198520093		Phillips Screws M5*12	2		
31	590998520071		Squeegee Lifting Lever	1		

1= Supply as package. 2= Supply with constraints. 3= Phasing-out supply. 4= Supply as assembly. 5= Check other tables.

02 Aluminum Rod (590946021502) Continuation

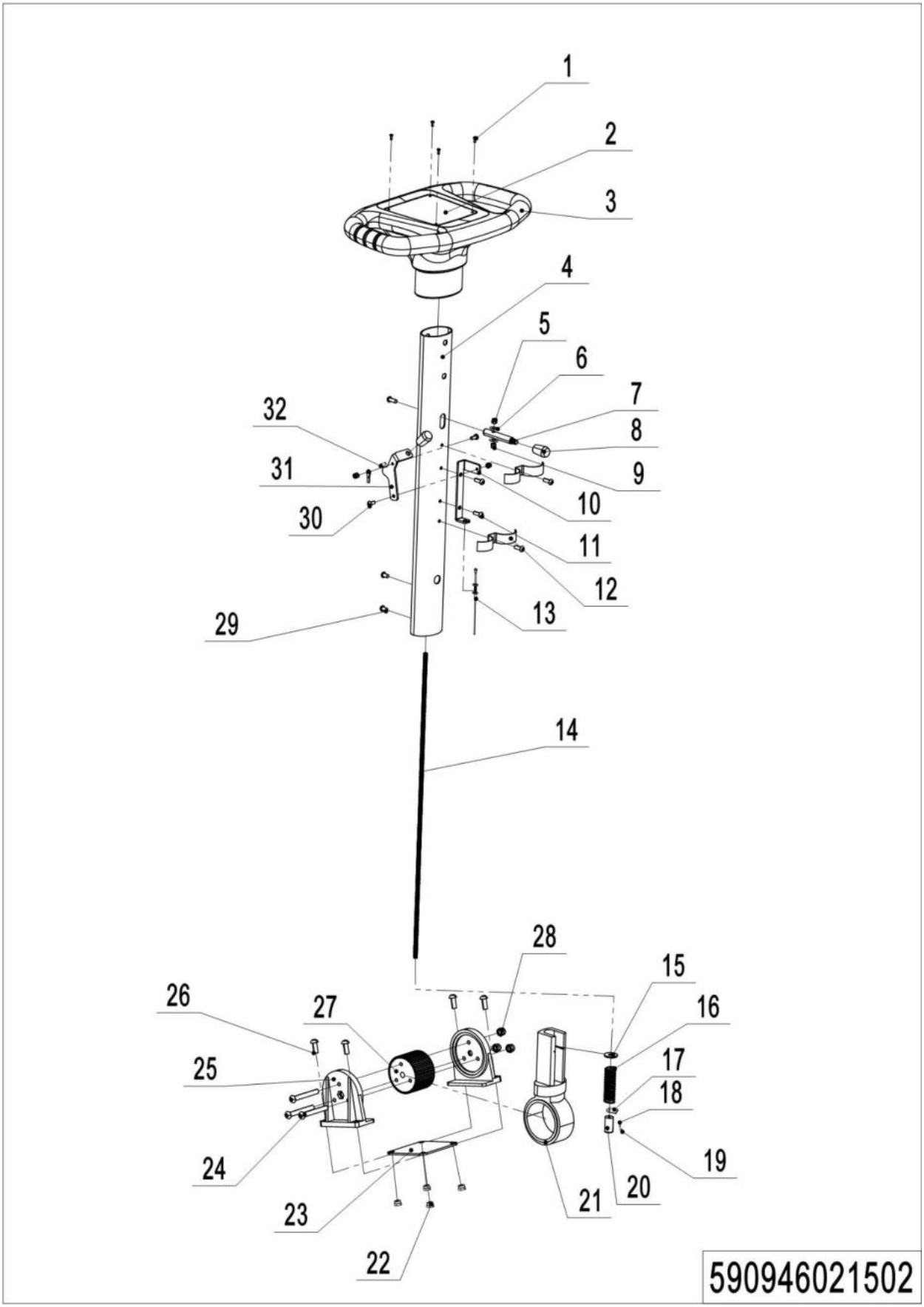

1= Supply as package. 2= Supply with constraints. 3= Phasing-out supply. 4= Supply as assembly. 5= Check other tables.

02 Aluminum Rod (590946021502) Continuation

No.	Item Code	Mark	Item Description	Qty.	Substitute	Note
32	590998520072		Allen Screws M8*16	1		

1= Supply as package. 2= Supply with constraints. 3= Phasing-out supply. 4= Supply as assembly. 5= Check other tables.

03 Brush Disc (590946021503)

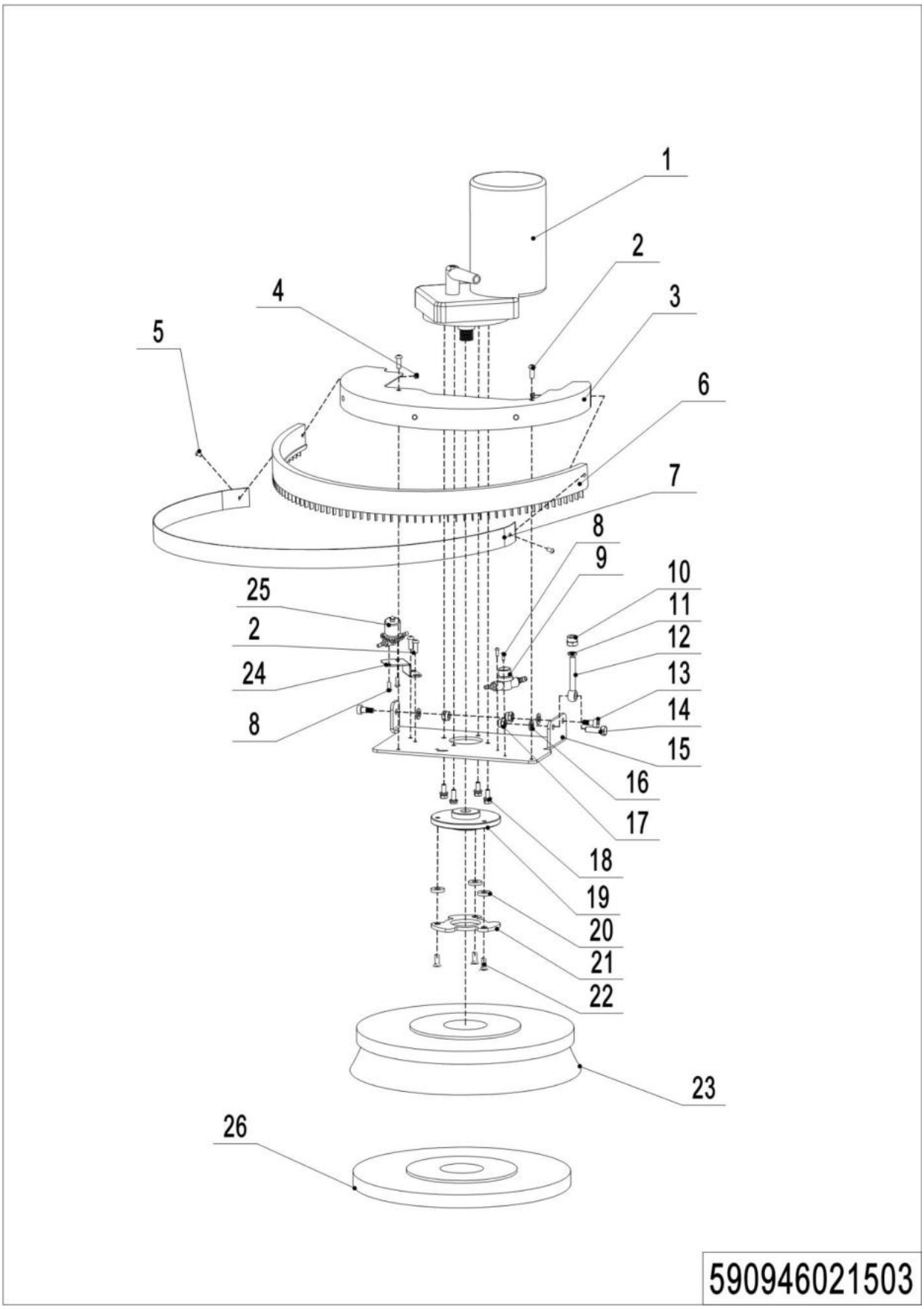

1= Supply as package. 2= Supply with constraints. 3= Phasing-out supply. 4= Supply as assembly. 5= Check other tables.

03 Brush Disc (590946021503)

No.	Item Code	Mark	Item Description	Qty.	Substitute	Note
1	590998520021		Brush Motor	1		
2	590998520014		Allen Screws M6*12	4		
3	590998520023		Brush Disc Cover	1		
4	590198520068		Nut Hex Self Locking M5	2		
5	590198520093		Phillips Screws M5*12	2		
6	590998520024		Water-Retaining Skirt	1		
7	590998520104		Skirt Pressing	1		
8	590198520092		Phillips Screwsm4*10	4		
9	590998520056		Filter	1		
10	590198520066		Nut Hex Self Locking M8	2		
11	590198520122		Thin Nuts M8	1		
12	590998520025		Spherical Bearings	1		
13	590998520027		Plug And Screw M8*10	2		
14	590198520100		Allen Screws M8*25	1		
15	590998520026		Secure The Plate	1		
16	590198520079		Flat Gaskets D6*D18*1.5	2		
17	590198520067		Nut Hex Self Locking M6	2		
18	590198520142		M6*16 Allen Screws	4		
19	590998520028		Flange	1		
20	590998520029		Flange Gasket	3		
21	590998520030		Flange Plate	1		
22	590998520031		Flat Machine Screws	3		
23	590998520032		14 Inch Brush Plate	1		
23	590998520033		14 Inch Needle Holder	1		
24	590998520035		Sheet Metal Parts	1		
25	590998520054		Solenoid Valve	1		
26	590998520119		Red Scouring Pads	1		
	590998520120		White Scouring Pads	1		
	590998520121		Black Scouring Pads	1		

1= Supply as package. 2= Supply with constraints. 3= Phasing-out supply. 4= Supply as assembly. 5= Check other tables.

04 Water Scraper (590946021504)

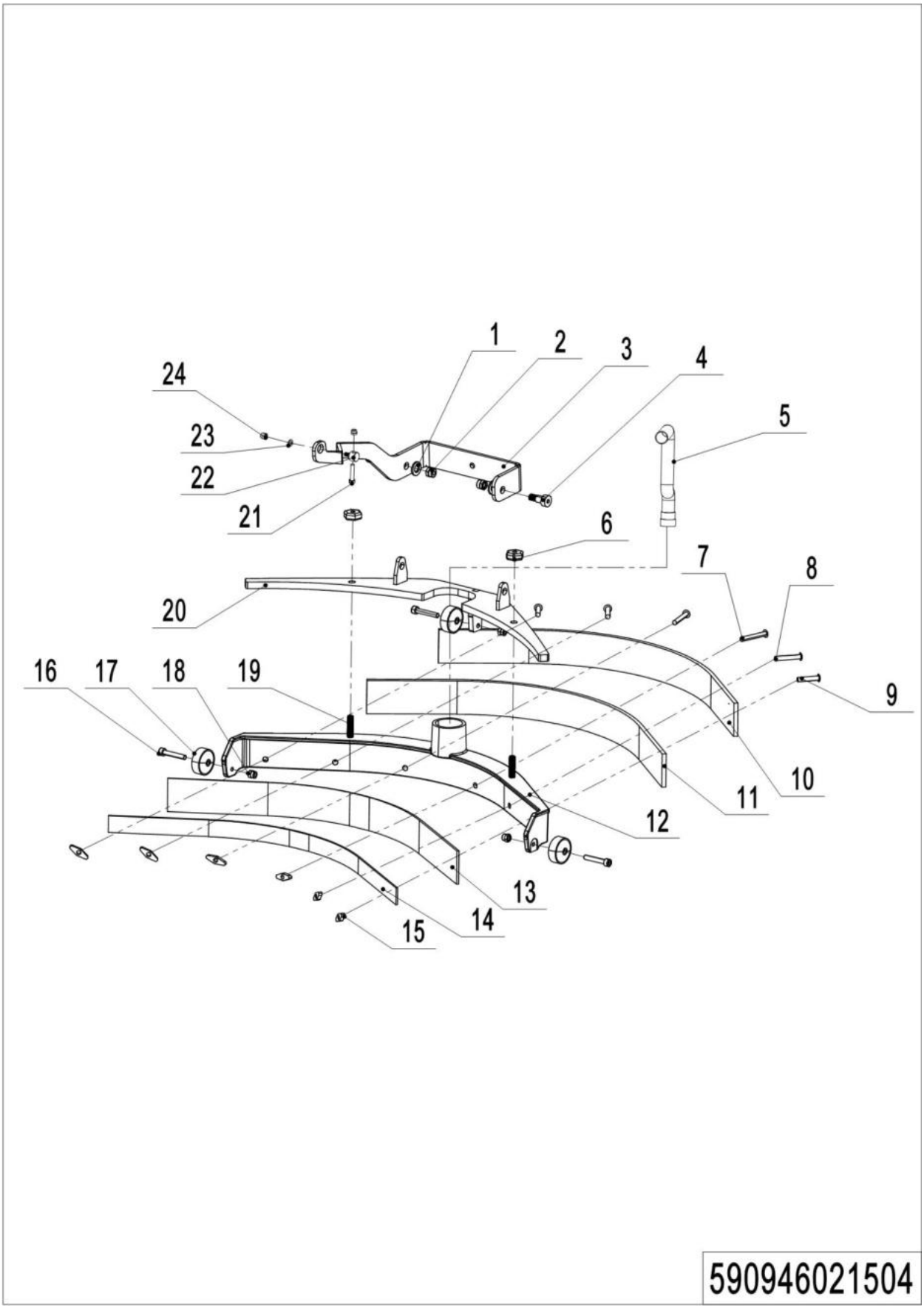

1= Supply as package. 2= Supply with constraints. 3= Phasing-out supply. 4= Supply as assembly. 5= Check other tables.

04 Water Scraper (590946021504)

No.	Item Code	Mark	Item Description	Qty.	Substitute	Note
1	590198520079		Flat Gaskets D6*D18*1.5	2		
2	590198520067		Nut Hex Self Locking M6	2		
3	590998520036		Bogie	1		
4	590998520027		Plug Screw M8*10	2		
5	590998520038		Pipettes 2KS0020+KS0045	1		1.48m
6	590998520039		Hex Nut 25*M6	2		
7	590998520040		Carriage Screws M5*35	2		
8	590998520041		Carriage Screws M5*30	2		
9	590998520042		Carriage Screws M5*25	2		
10	590998520043		Rear Pressing Strip	1		
11	590998520044		NR Front Bead	1		
12	590998520045		Water Scraper	1		
13	590998520050		NR Rear Bead	1		
14	590998520049		Front Pressing Strip	1		
15	590998520048		One Word Handle Nut	6		
16	590998520046		Allen Round Screws	3		
17	590998520047		Wheel 32*13	3		
18	590198520068		Nut Hex Self Locking M5	3		
19	590998520053		Set The Screws M6*30	2		
20	590998520052		Water Scraper Stand	1		
21	590498520130		Screw Socket Hd M8x35	1		
22	590998520051		Gimbal Axis	1		
23	590398520102		Flat Pad 8*16*1	1		
24	590198520066		Nut Hex Self Locking M8	2		

1= Supply as package. 2= Supply with constraints. 3= Phasing-out supply. 4= Supply as assembly. 5= Check other tables.

05 Waterway (590946021505)

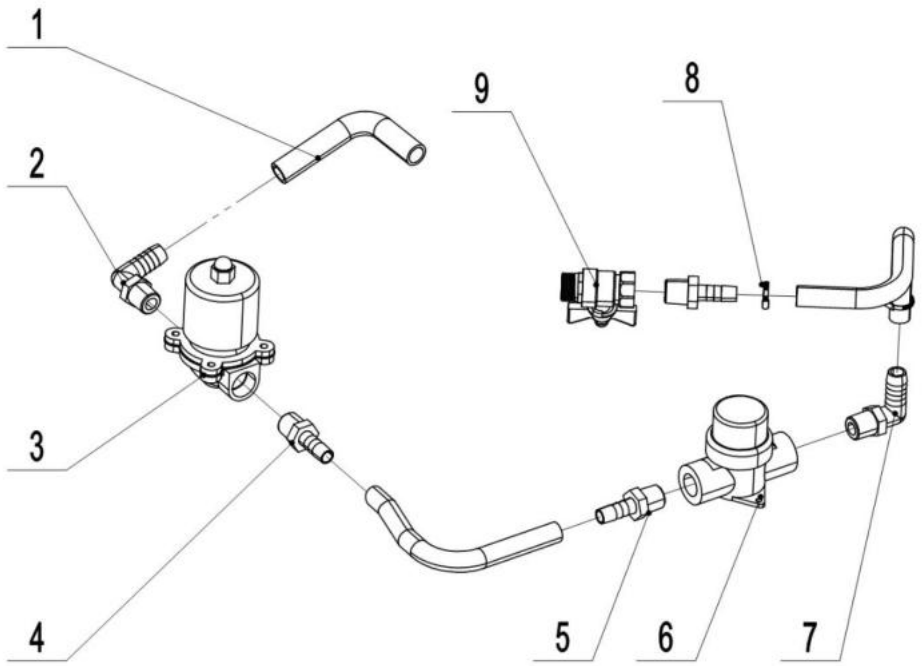

590946021505

1= Supply as package. 2= Supply with constraints. 3= Phasing-out supply. 4= Supply as assembly. 5= Check other tables.

05 Waterway (590946021505)

No.	Item Code	Mark	Item Description	Qty.	Substitute	Note
1	590198520062		Water Pipe 12	0.7		0.7m
2	590198510012		Copper Connectors 2-10	1		
3	590998520054		Solenoid Valve	1		
4	590198510013		Copper Connectors 2-10	2		
5	590998520055		Copper Connectors 3-10	1		
6	590998520056		Filter	1		
7	590998520057		Copper Connectors 3-10	1		
8	590198520096		Hose Clamp D13-19	2		
9	590998520058		Valve	1		

06 Recovery Tank (590946021506)

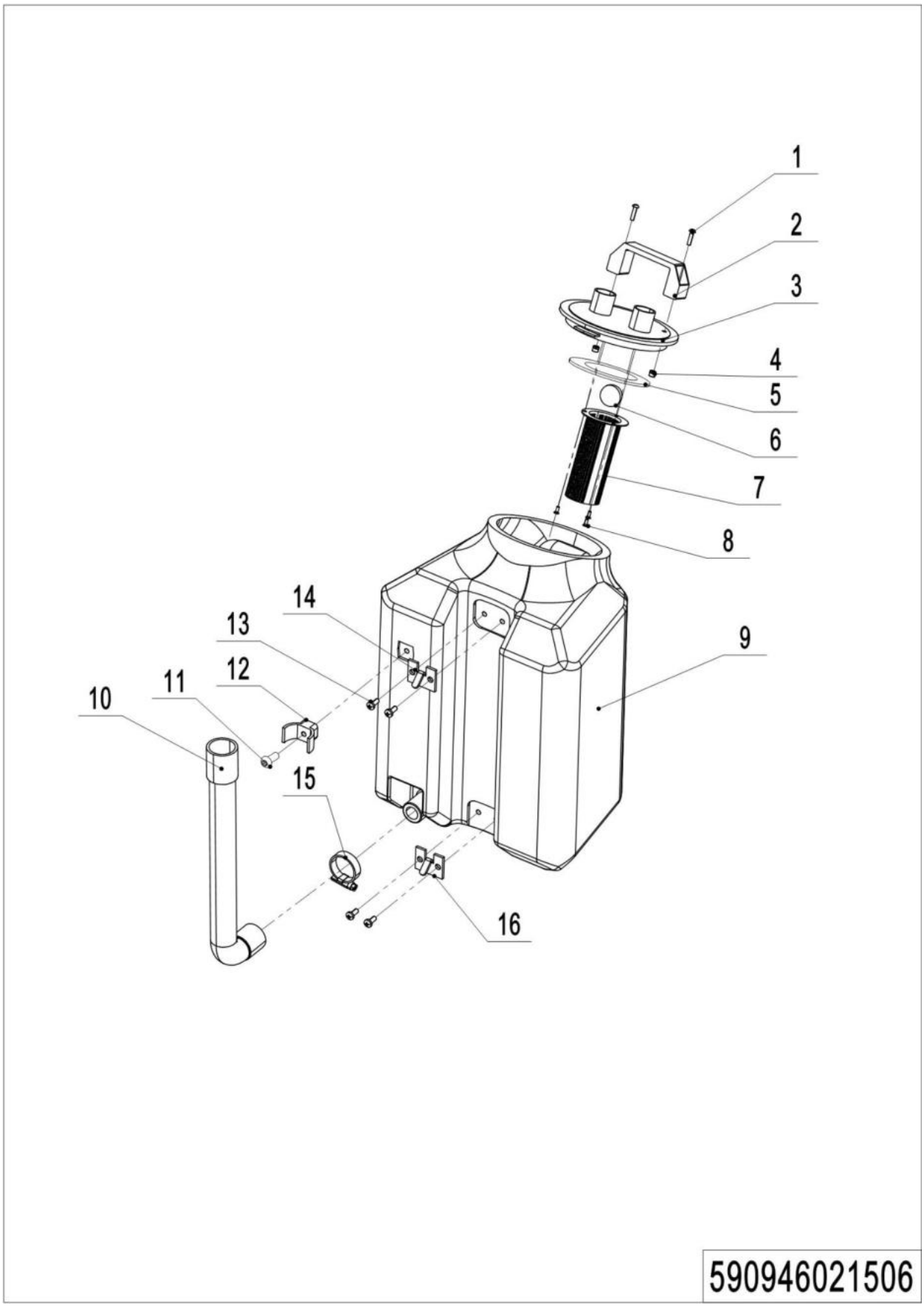

1= Supply as package. 2= Supply with constraints. 3= Phasing-out supply. 4= Supply as assembly. 5= Check other tables.

06 Waste Water Tank Components (590946021506)

No.	Item Code	Mark	Item Description	Qty.	Substitute	Note
1	590998520085		Allen Screws M4*16	2		
2	590998520086		Squeegee Lifting Lever	1		
3	590998520087		Recovery Tank Cover	1		
4	590498520079		Nut Hex Self Locking M4	2		
5	590998520088		Sealing Rings 133	1		
6	590998520089		Floating Ball	1		
7	590998520090		Filter	1		
8	590998520091		Self-Tapping Screws	3		
9	590998520092		Recovery Tank	1		
10	590998520096		Sewage Pipes	1		0.4m Elastic Tube
11	590798510023		Flat Machine Screws	1		
12	590998520094		Sewage Pipe Clamps	1		
13	590198520093		Phillips Screws M5*12	4		
14	590998520093		Upper hook	1		
15	590998520095		Clamps 12-38	1		
16	590998520118		Lower snap hook	1		

Chapter 2：Electrical Systems

01 Battery (590946037001)

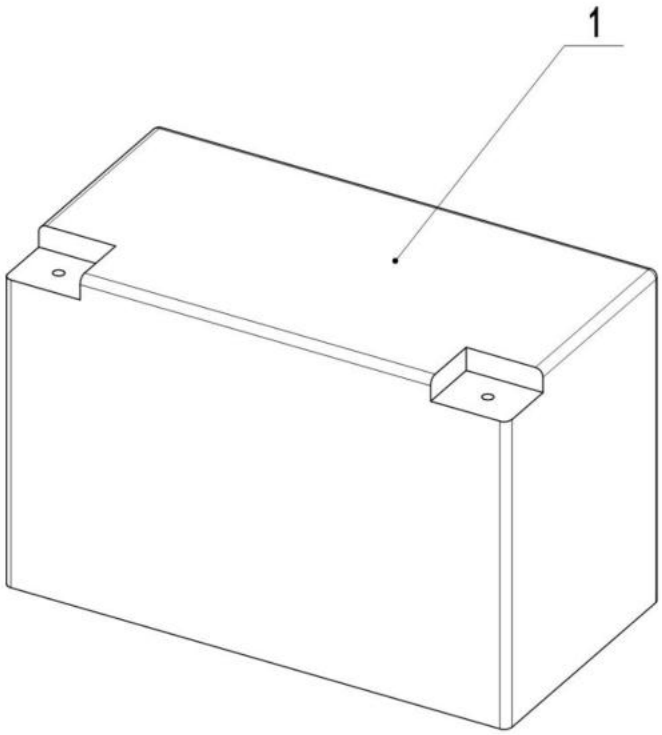

590946037001

1= Supply as package. 2= Supply with constraints. 3= Phasing-out supply. 4= Supply as assembly. 5= Check other tables.

01 Battery (590946037001)

No.	Item Code	Mark	Item Description	Qty.	Substitute	Note
1	590946037001		Battery 12V30AH	2		

1= Supply as package. 2= Supply with constraints. 3= Phasing-out supply. 4= Supply as assembly. 5= Check other tables.

02 Charger (590946036501)

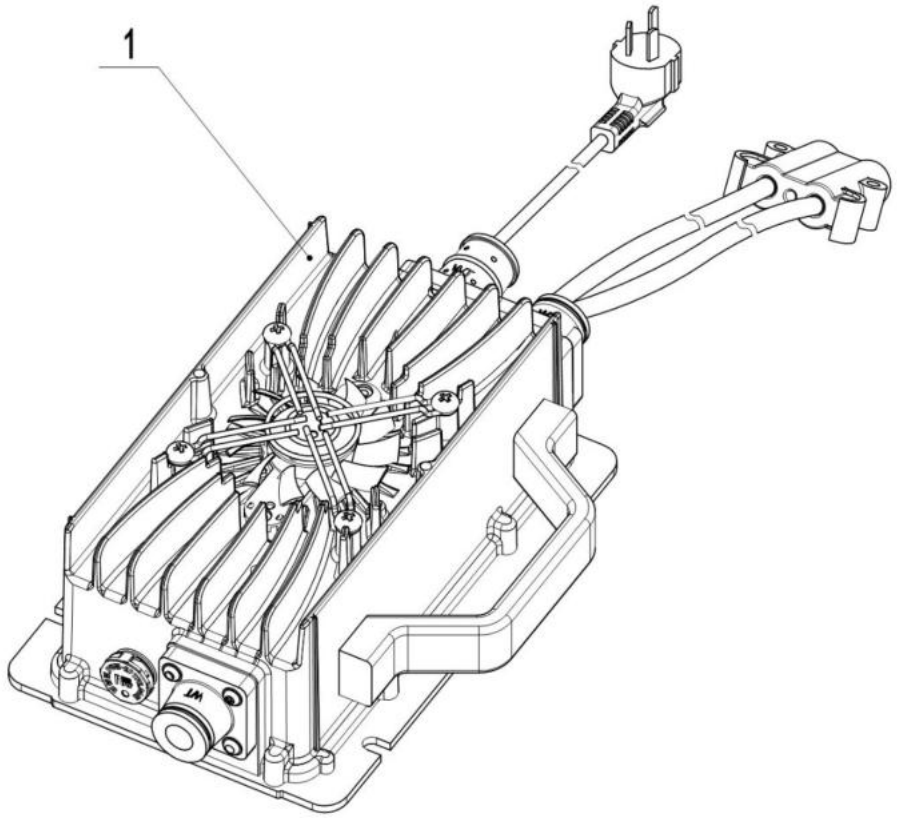

590946036501

1= Supply as package. 2= Supply with constraints. 3= Phasing-out supply. 4= Supply as assembly. 5= Check other tables.

02 Charger (590146036501)

No.	Item Code	Mark	Item Description	Qty.	Substitute	Note
1	590998520105		Charger 24V5A(Asia)	1		
1	590998520106		Charger 24V5A(ENG)	1		
1	590998520107		Charger 24V5A(US)	1		
1	590998520108		Charger 24V5A(EU)	1		
1	590998520109		Charger 24V5A(AUS)	1		
1	590998520110		Charger 24V5A(ITA)	1		
1	590998520111		Charger 24V5A(SWE)	1		
1	590998520112		Charger 24V5A((ISR)	1		
1	590998520113		Charger 24V5A(BRA)	1		

03 Harness Assembly (590946033001)

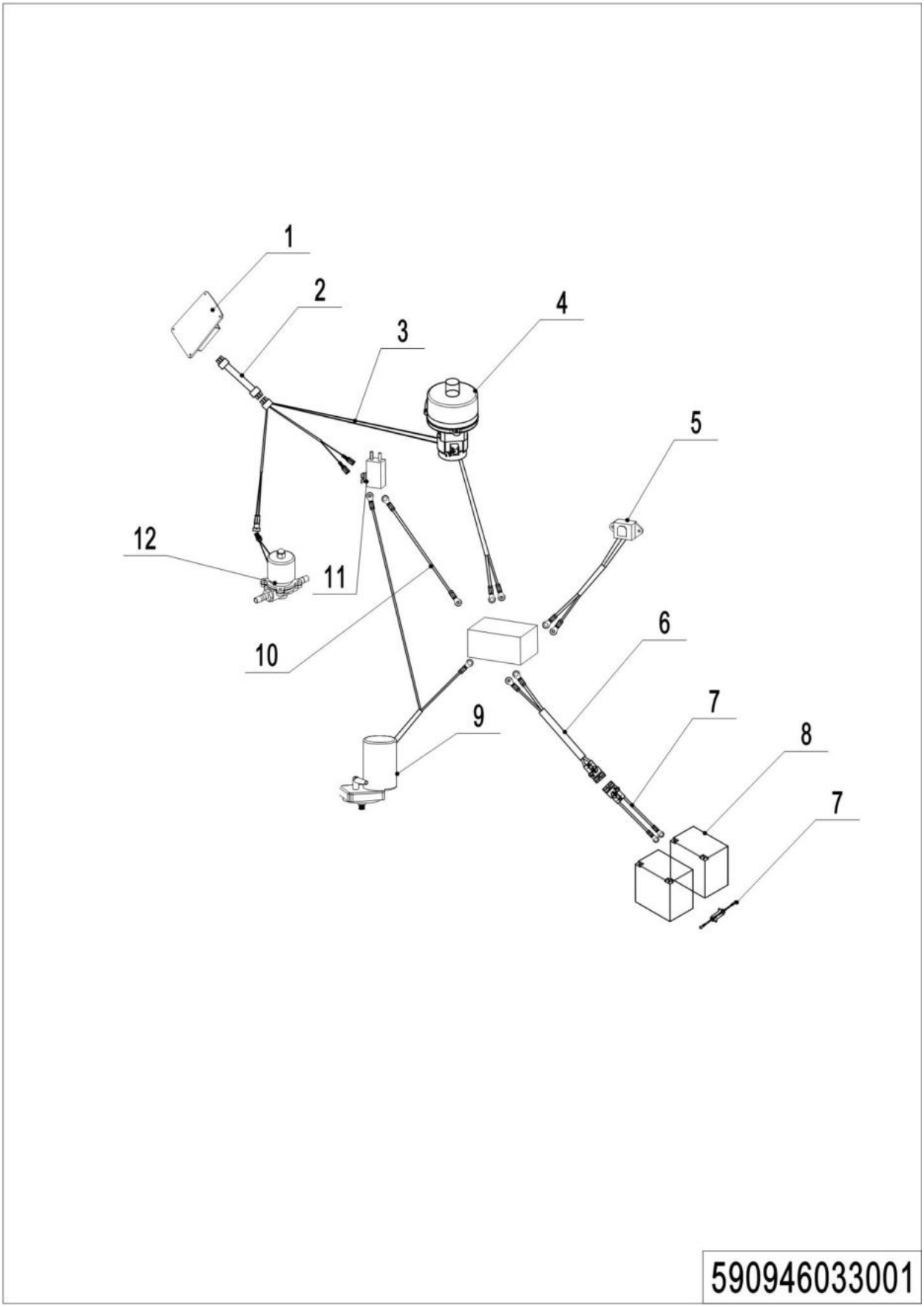

1= Supply as package. 2= Supply with constraints. 3= Phasing-out supply. 4= Supply as assembly. 5= Check other tables.

03 Harness Assembly (590346033001)

No.	Item Code	Mark	Item Description	Qty.	Substitute	Note
1	590998520060		Circuit Board	1		
2	590998520097		Control Line	1		
3	590998520098		Motor Control Line	1		
4	590198510011		Water Suction Motor 6a	1		
5	590998520011		Charging Product Header	1		
6	590998520100		Main Wire	1		
7	590998520101		Battery Line	1		
8	590998520102		Battery 12V30AH	2		
9	590998520021		Brush Motor	1		
10	590998520103		Adapter Cable	1		
11	590198510010		DC Relays	1		
12	590998520054		Solenoid Valve	1		

Chapter 3：Other

01 Signs (590947020001)

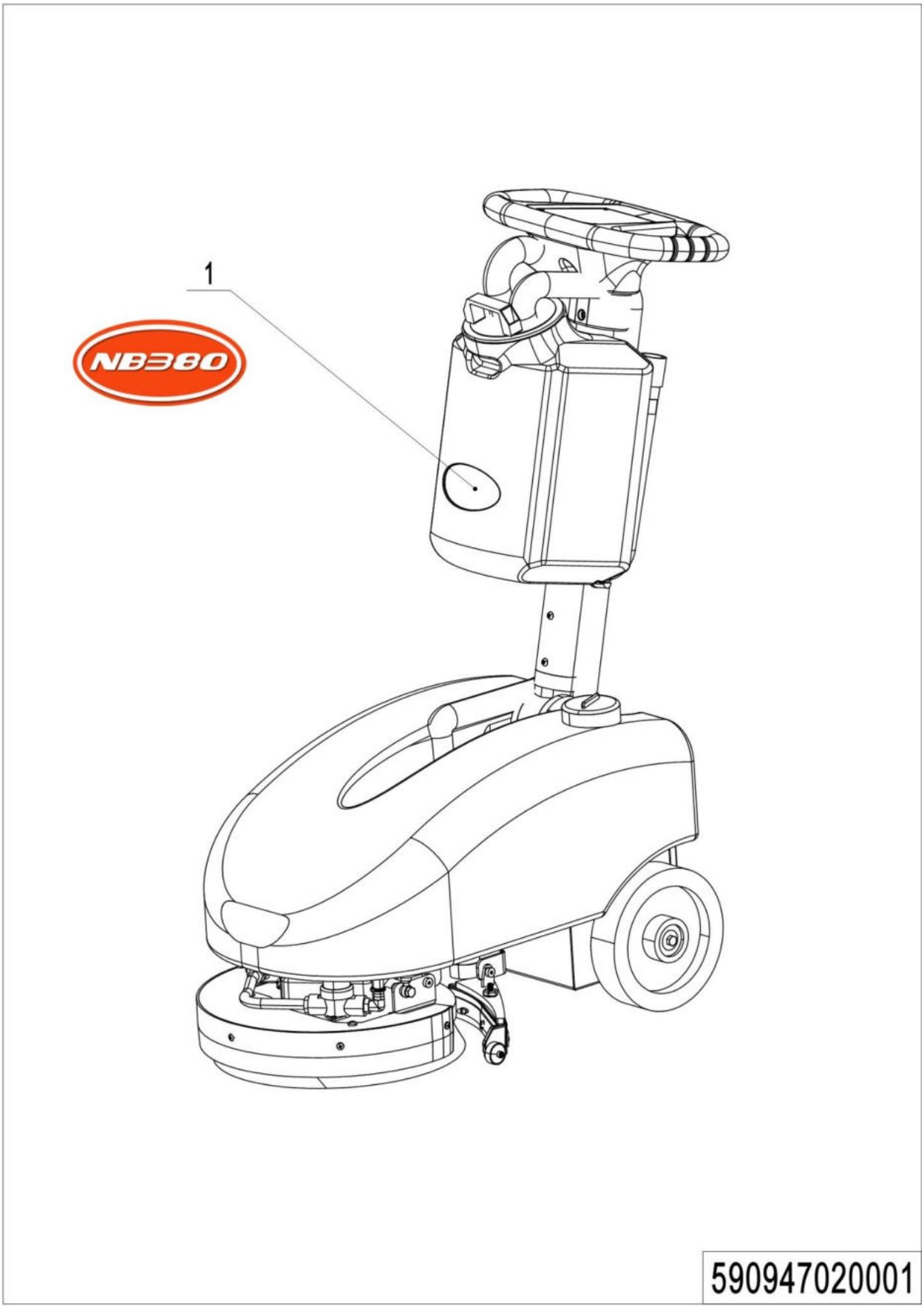

1= Supply as package. 2= Supply with constraints. 3= Phasing-out supply. 4= Supply as assembly. 5= Check other tables.

01 Signs (590946020001)

No.	Item Code	Mark	Item Description	Qty.	Substitute	Note
1	590946047001		Stickers (NB380)	1		

1= Supply as package. 2= Supply with constraints. 3= Phasing-out supply. 4= Supply as assembly. 5= Check other tables.

Appendix

01 Electrical Schematics (590946045501)

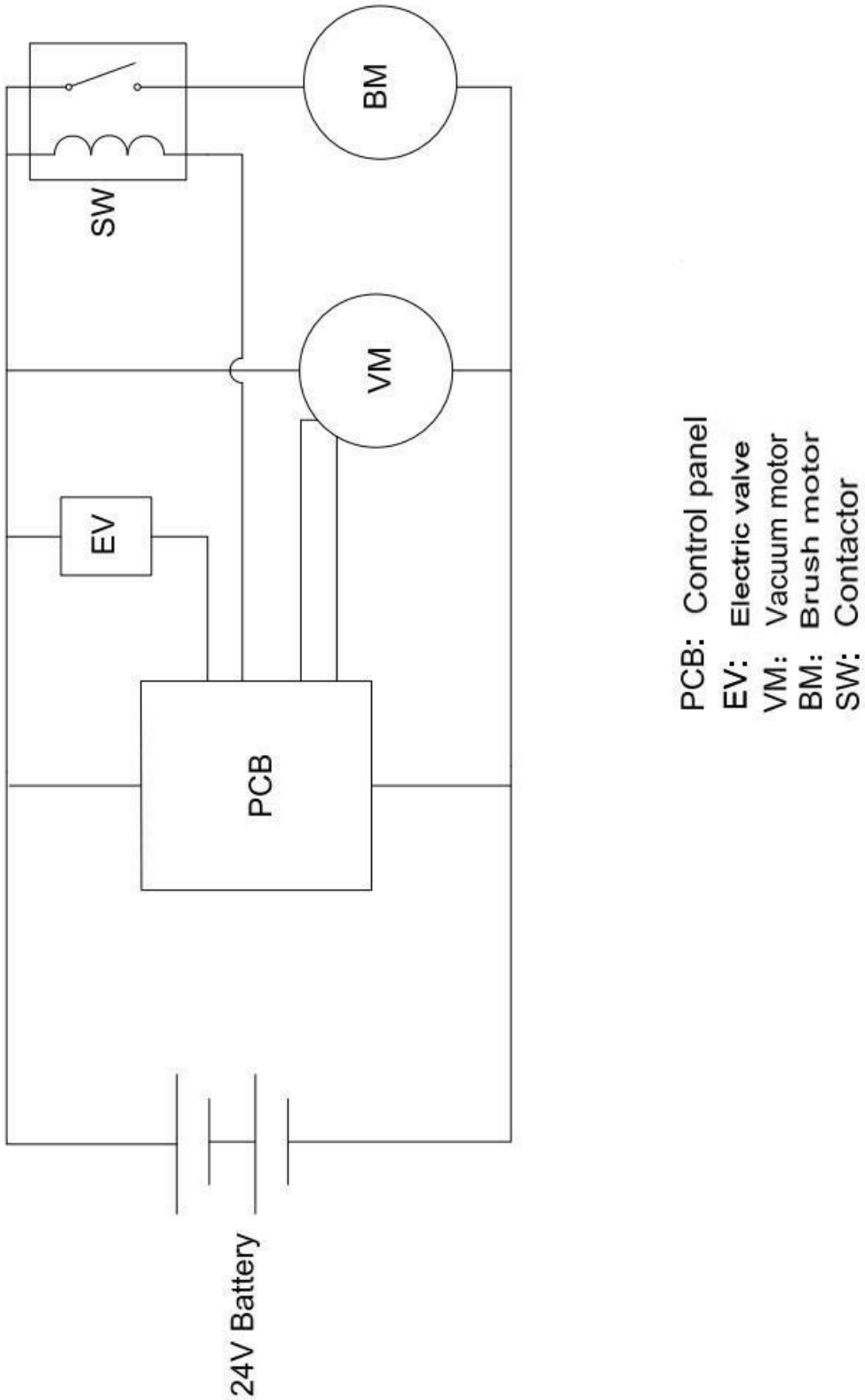

02 List Of Wear Parts

No.	Item Code	Item Description	Qty.	Chapter/ Section/ Number
1	590998520002	Pipettes 1KS0020+KS0045	1	Chapter 1/01/03
2	590198510011	Brushless Suction Motor	1	Chapter 1/01/04
3	590198520022	Wheel	2	Chapter 1/01/17
4	590998520018	Shock Absorber 15*20m6	2	Chapter 1/01/29
5	590998520021	Brush Motor	1	Chapter 1/03/01
6	590998520056	Filter	1	Chapter 1/03/09
7	590998520054	Solenoid Valve	1	Chapter 1/03/24
8	590998520038	Pipettes 2KS0020+KS0045	1	Chapter 1/04/05
9	590998520047	Wheel 32*13	3	Chapter 1/04/10
10	590198520062	Water Pipe 12	0.7m	Chapter 1/05/01
11	590998520058	Valve	1	Chapter 1/05/09
12	590998520088	Sealing Rings	1	Chapter 1/06/05
13	590998520089	Floating Ball	1	Chapter 1/06/06
14	590998520090	Filter	1	Chapter 1/06/07

1= Supply as package. 2= Supply with constraints. 3= Phasing-out supply. 4= Supply as assembly. 5= Check other tables.

03 List Of Consumables

No.	Item Code	Item Description	Qty.	Chapter/ Section/ Number
1	590998520032	14 Inch Brush Plate	1	Chapter 1/03/23
1*	590998520033	14 Inch Needle Holder	1	Chapter 1/03/23
	590998520114	Brush Disc (Soft Hair)	1	Matching
	590998520115	Brush Disc (Stiff Hair)	1	Matching
2	590998520044	NR Front Bead	1	Chapter 1/04/11
	590998520116	PU Front Bead	1	Chapter 1/04/11
3	590998520050	NR Rear Bead	1	Chapter 1/04/13
	590998520117	PU Rear Adhesive Strip	1	Chapter 1/04/13
4	590998520119	Red Scouring Pads	1	Chapter 1/03/28
	590998520120	White Scouring Pads	1	Chapter 1/03/28
	590998520121	Black Scouring Pads	1	Chapter 1/03/28

1= Supply as package. 2= Supply with constraints. 3= Phasing-out supply. 4= Supply as assembly. 5= Check other tables.