INSTRUCTION HANDBOOK

Electric Pallet Truck

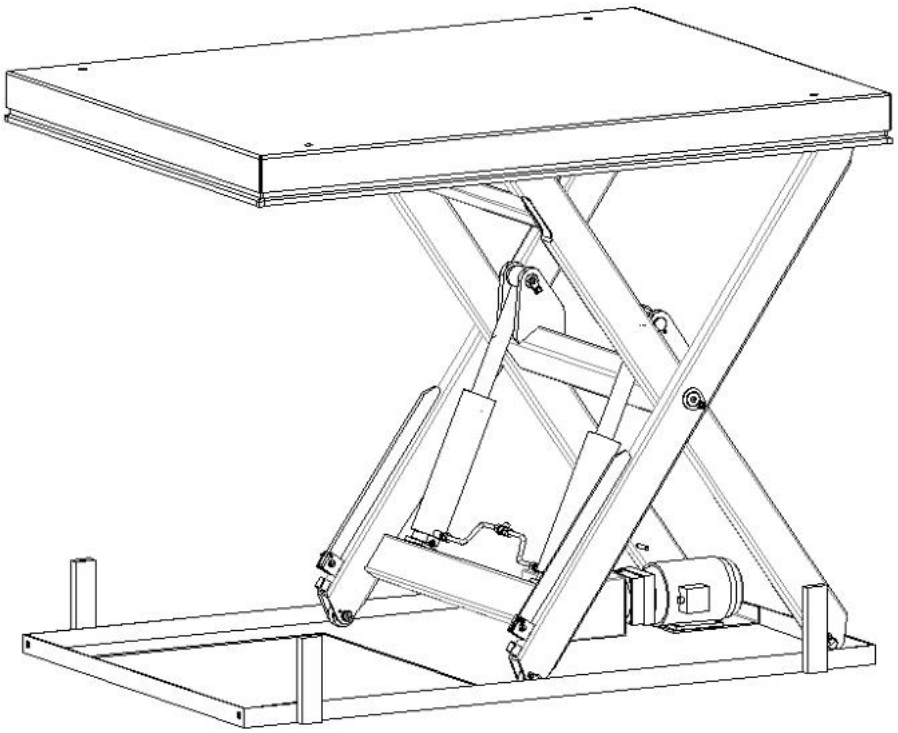

WARNING

Do not use the pallet truck before reading and understanding these operating instructions.

NOTE:

- **Please check the designation of your present type at the last page of this document as well as on the ID-plate.**
- **Keep for future reference.**

Version 09/2018

HIW-SMS-001-EN

FOREWORD

Before operating the electric lifting table, read this ORIGINAL INSTRUCTION HANDBOOK carefully and understand the usage of the truck completely. Improper operation could create danger.
This handbook describes the usage of different electric lifting table. When operating and servicing the truck, make sure, that it applies to your type.

Keep this handbook for future reference. If this or the warning/ caution labels are damaged or got lost, please contact your local dealer for replacement.

This truck complies with the requirements according to EN 1570-1:2011+A1 （Safety requirements for lifting tables Part 1:), EN 12895 (Industrial trucks- electromagnetic compatibility), EN 12053 (Safety of industrial trucks- test methods for measuring noise emissions), EN 1175-1 (Industrial truck safety – electrical requirements), assumed the truck is used according to the described purpose.
The noise level for this machine is <70 dB (A) according to EN 12053.

ATTENTION:

- Environmentally hazardous waste, such as batteries, oil and electronics, will have a negative effect on the environment, or health, if handled incorrectly.
- The waste packages should be sorted and put into solid dustbins according to the materials and be collected disposal by local special environment protection bureau. To avoid pollution, it's forbidden to throw away the wastes randomly.
- To avoid leaking during the use of the products, the user should prepare some absorbable materials (scraps of wooden or dry duster cloth) to absorb the leaking oil in time. To avoid second pollution to the environment, the used absorbable materials should be handed in to special departments in terms of local authorities.
- Our products are subject to ongoing developments. Because this handbook is only for the purpose of operating /servicing the stacker, therefore please have understanding, that there is no guarantee out of particular features out of this handbook.

NOTE: On this manual, the left sign means warning and danger, which can lead to death or serious injury if not followed.

Copyright

The copyright remains with the company, mentioned on the CE- certificate or, if sold within the USA, with the company, mentioned on the company sticker.

TABLE OF CONTENTS

1. CORRECT APPLICATION 4
2. DESCRIPTION OF THE PALLET TRUCK 5
   a. Main technical data 5
   b. Description of the safety devices and warning labels 9
   c. Identification plate 9
3. WARNINGS, RESIDUAL RISK AND SAFETY INSTRUCTIONS 11
4. DAILY INSPECTION 12
5. OPERATING INSTRUCTIONS 12
   a. Emergency switch 12
   b. Lifting switch 12
   c. Lowering switch 12
6. REGULAR MAINTENANCE 13
   a. Hydraulic oil 13
   b. Lubricating points 13
   c. Check and refill hydraulic oil 13
7. Hose specification 14
8. TROUBLE SHOOTING 14
9. WIRING/ CIRCUIT DIAGRAM 15
   a. Electrical circuit diagram 15
   b. Hydraulic circuit 15
10. Spare parts list 17
   Table of HIW2.0_A (2000KG) 17
   Cylinder of HIW2.0_A (2000KG) 19
   Table of HIW2.0_B (2000KG) 21
   Cylinder of HIW2.0_B(2000KG) 23
   Table of HIW3.0_A (3000KG) 25
   Cylinder of HIW3.0_A (3000KG) 27
   Table of HIW3.0_B (3000KG) 29
   Cylinder of HIW3.0_B (3000KG) 31
   Pump Station 33
11. DECLARATION OF CONFORMITY(valid, if sold within the EU) 34

1. CORRECT APPLICATION

Lift category of the table in accordance with EN1570: Lift category 3.

The table is design for indoor operation outside of public areas, not designed for use in loading docks as leveling device. The table has to be used firm, smooth, prepared, level and adequate surfaces with ambient temperatures between +5°C and + 40°C. Operating lighting must be minimum 50 Lux. The working area must be clean of any obstructions which may interrupt the field of view of an operator.

Installation

The table is supplied in assembled condition. Fix the table with the surface of floor to prevent its unintentional movement and increase stability.

During installation care should be taken to avoid mounting the lifting table in a position where the noise of the table is magnified.

Follow applicable Building and Safe Use Regulations during installation of the table

To avoid crushing and shearing the following minimum gaps must be ensured between moving and fixed parts which are in reach of persons (see EN ISO 13857) standing adjacent to the travel zone:

- for fingers, 25 mm;
- for toes, 50 mm;
- for hands, 100 mm;
- for arms and closed hands, 120 mm;
- for feet, 120 mm;
- for the body, 500 mm.

The operator's position shall give the operator a clear view of the hazardous parts of the platform and its load at all times throughout its vertical movement

2. DESCRIPTION OF THE PALLET TRUCK

a. Main technical data

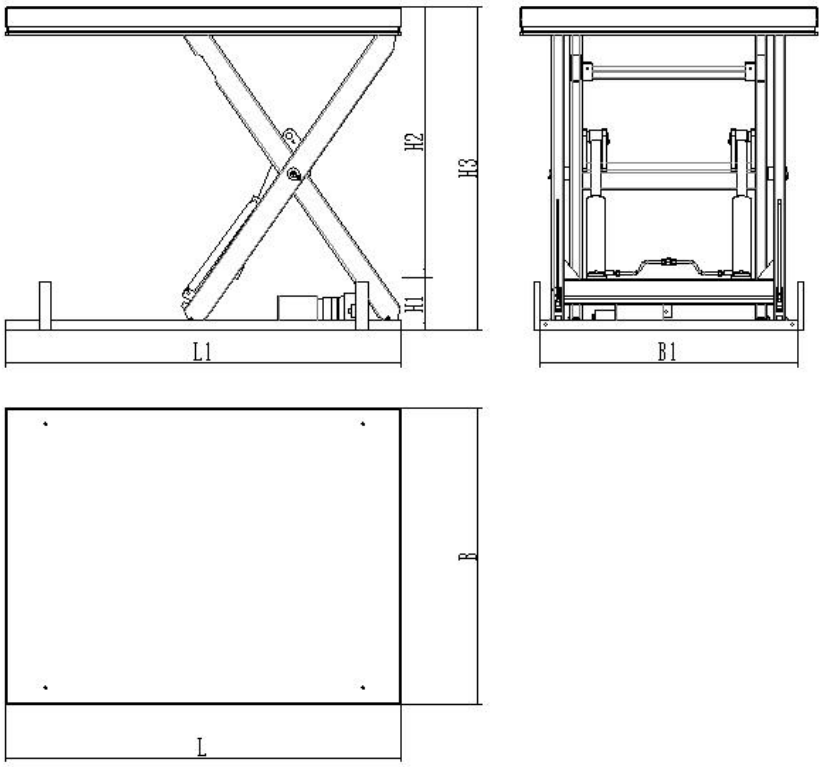

Fig.1: Technical data

Table 1: Main technical data for standard version

TYPE		HIW2.0_A	HIW3.0_A	HIW2.0_B	HIW3.0_B
Capacity	kg	2000	3000	2000	3000
Max. height H3	mm	1550	1600	1850	1900
Min.height H1	mm	250	300	250	300
Travel H2	mm	1300	1300	1600	1600
Dimension of the table (LxB)	mm	2000x1500	2000x1500	2200x1500	2200x1500
Dimension of base frame (L1xB1)	mm	2000x1300	2000x1300	2200x1300	2200x1300
Lifting speed	S	34	39	38	53
Lower speed	S	13	12	14	15
Pump electric current	L/min	4.9	4.9	4.9	4.9
Oil tank	L	3.5	5	5	5
Pump station		AC3x380, 1500W	AC3x380V, 1500W	AC3x380V, 1500W	AC3x380V 1500W
weight	Kg	575	657	626	720

b. Description of the safety devices and warning labels

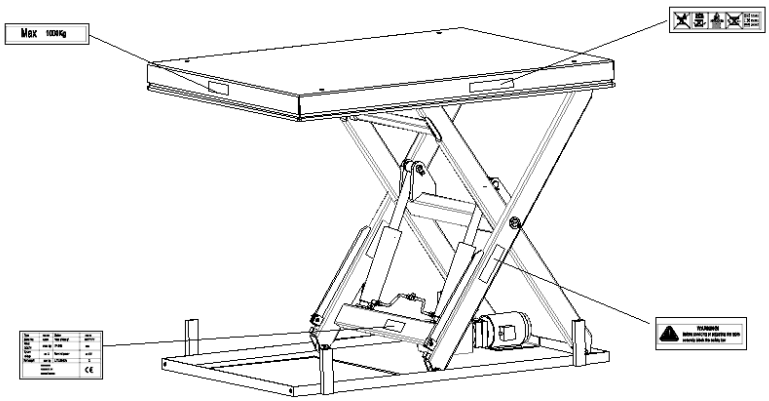

Fig.2: Sticker

A Sticker to read and follow these instructions
B Warning decal
C Capacity decal
D Identification plate (ID-plate)

c. Identification plate

1 Designation, type
2 Serial number
3 Rated capacity in kg
4 Supply voltage in V
5 Own mass (self weight) in kg
6 Name and address of manufacturer)
7 Lift category
8 Nominal power in kW
9 IP code
10 Manufacturing date
11 Option

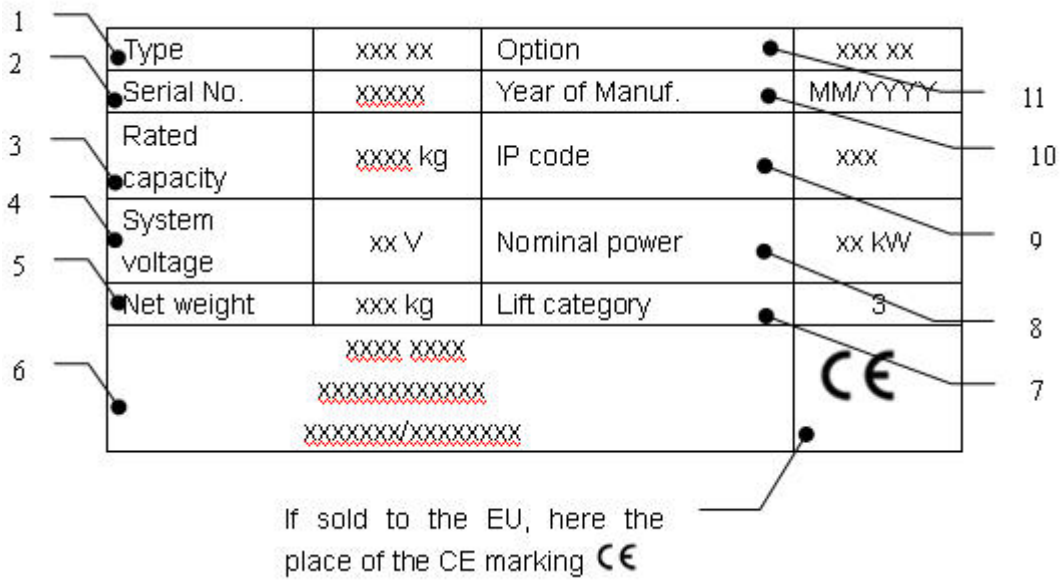

3. WARNINGS, RESIDUAL RISK AND SAFETY INSTRUCTIONS

Operator should read all warning signs on the truck and instructions here before using it.

- Only trained personnel can use the table. The notice shall be permanently fixed in a visible position at the control position, stating that only authorized persons are allowed to operate the lifting table.
- Do not put foot and hand under the scissors, injury could happen.
- Do not enter under table.
- Do not overload the table. Do not lift loads with unknown weight. The user assesses the possible hazards of overloading the lifting table should take appropriate measures to avoid overloading. The rated load of lifting table shall be clearly and permanently marked on the load carrying platform and should be easily readable from the control position
- Do not use it on slope, lift table may become uncontrollable and create danger.
- Do not lift persons. People could fall down and suffer severe injury.
- Do not side or end load .Load must be distributed on at least 80% of the table area
- The table should be maintained by the professional operator.
- Keep watching the condition of load, stop operating lift table if load becomes unstable.
- Check and maintain the lift table regularly.
- Do not use the lift table continuously; the pump station would be damaged.
- Stop operating the lift table if the temperature of the oil is too high.
- The table should be lowered to the bottom if the lift table is not used.
- Do not lift unstable loads or wheeled loads. Fix the load securely before lifting to avoid unintended displacement.
- Always consider residual risks and hazard which may be connected with a particular application. Contact with a supervisor to clarify concerns if necessary.
- All emergency stop devices shall clearly identify to which lifting table they belong

INSTALLATION INSTRUCTIONS:

The Lift table base frame must be secured to the floor for maximum stability. Contact your Dealer or Industries Corporation if you have any questions regarding the proper installation of the lift. Complete steps 1 and 2 to secure the lift to the floor.

1. Inside the base frame are four (4) 19mm holes for lagging the unit securely to the floor. Using the four (4) holes as a template, drill a 16mm diameter hole, 90mm minimum depth at each location. The floor surface should be level and the drilled holes perpendicular to the floor. If required, shift the position of the lift with a forklift to allow room for drilling, then drill. When complete, reposition the lift.

2. As detailed in Figure 7, prepare the M12mm diameter x 120mm long anchor bolts by assembling the washer and nut on the anchor bolt. The nut should be screwed onto the anchor bolt approximately 1/2 the nut height. Drive the assembled anchor through the mounting hole into the concrete until the washer is flush with the top of the anchor plate. Expand the anchor shield by tightening the nut three (3) to five (5) turns. Repeat step 2 for the remaining anchors. NOTE: Make sure the underside of the base frame surface is fully supported with shims or concrete grout.

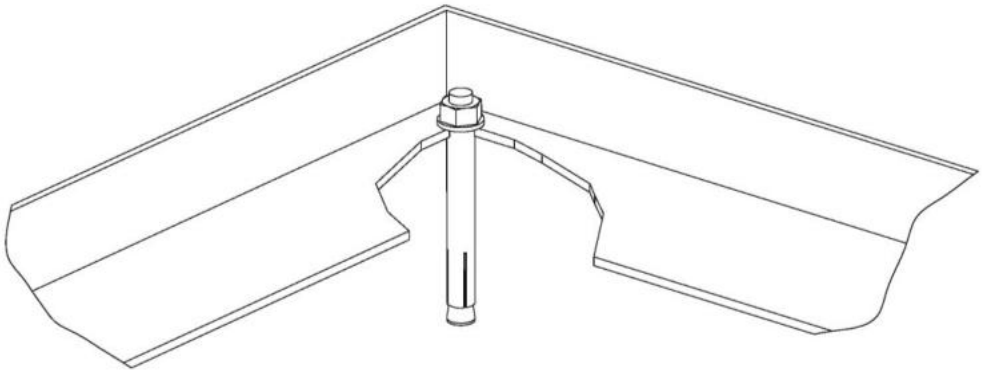

Figure 7 Anchor Bolt Detail

4. DAILY INSPECTION

It is necessary to check the truck daily. Special attention should be paid to the rollers, the axles, threads, rags, hydraulic connection points and condition of hoses, condition of electric wires and grounding wires, etc., The structure of table should be checked, if deformation found - contact with maintenance specialist in ordered to replace the damaged parts; the table should be unloaded and lowered in the lowest position when the job is over. Any replacement parts required for the lifting table shall be obtained from the original manufacturer. When a major repair or replacement to a load supporting member of the lifting table has been carried out it shall be re-tested according to Annex C of EN1570.

5. OPERATING INSTRUCTIONS

a. Emergency switch

When you press down this switch, it will switch off the power, and then you turn it clockwise, it will switch on the power.

b. Lifting switch

When you press down this switch, the table will lift; when you loose your hand, the table will stop lifting.

c. Lowering switch

When you press down this switch, the table will be lowering; when you release the button, the table will stop lowering.

The table can not lift or lower when the function of safety protection frame activated. After an emergency stop device has been operated the reason for the operation shall be investigated before continuing to operate the lifting table. After the reason of activation is removed, when you press down the lifting or

lowering switch, the table will lift or lower again.

6. REGULAR MAINTENANCE

a. Hydraulic oil

Please check the oil level every six months. The oil can be hydraulic oil: ISO VG 32(GB11118-89), its viscosity should be 32cSt at 40℃, HIW20_A total volume is about 3.5L.Others about 5L
If the hydraulic pressure needs to be checked, the measuring device can be connected to the pipe line through the corresponding joint.

b. Lubricating points

Lubricate the marked points according to the maintenance checklist. The required grease specification is: DIN 51825, standard grease.

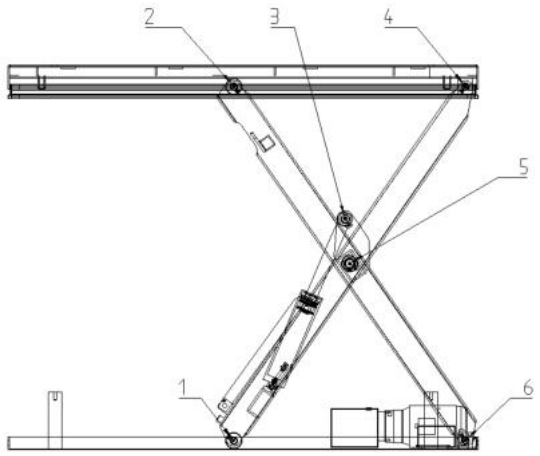

1 Lower roller axle
2 Upper roller axle
3 Cylinder shaft
4 Upper connect shaft
5 Scissor shaft
6 Lower connect shaft

Fig. 4: Lubricating points

c. Check and refill hydraulic oil

It is recommended to use hydraulic oil in connection with average temperature:

Environment temperature	–5℃~25℃	>25℃
Type	HVLP 32，DIN 51524	HLP 46，DIN 51524
Viscosity	28.8-35.2	41.4 - 47
Amount	3.5L/5L	

Waste material like oil, used batteries or other must be probably disposed and recycled according to the national regulations and if necessary brought to a recycling company.
If necessary add oil at the filling point.

7. Hose specification

1. HIW2.0_A,HIW3.0_A specification for hose
Hose assembly(straight) 6-L1300-1SC-24º, Inner diameter of rubber 6mm, length 1300mm,
C Mode press type rubber pipe joint.

2. HIW2.0_B,HIW3.0_B specification for hose
Hose assembly(straight) 6-L1500-1SC-24º, Inner diameter of rubber 6mm, length 1500mm,
C Mode press type rubber pipe joint.

8. TROUBLE SHOOTING

Table 2: Trouble shooting

NO	TROUBLE	CLAUSE	FIXING METHODS
1	The table can not be up the max. height	-The hydraulic oil is not enough -The position of the travel switch	-Pour in the oil -Adjust the position of travel switch
2	The table can not lift.	-Without hydraulic oil. -safety valve has no enough pressure.	-Pour in the oil -Adjust the safety valve.
3	The motor cannot run	-The emergency switch is turned off -The connection of electrical wire is loose. -The contactor of DC motor is damaged.	-Turn the emergency switch clockwise; -Tight it; -Replace it with a new one
4	The table cannot descend	-The piston rod or cylinder is deformed resulting from partial loading slanting to one side or over-loading. -The fork was kept in the high position for long time, which cause piston rod bared to arise in rusting and jamming of the rod. -The release valve of pump can not work because of abrasion	-Replace the piston rod or cylinder with new one -Keeping the fork in the lowest position if not using, and pay more attention to lubricate the piston rod. -Replace with new one
5	Leaks	-Sealing parts worn or damaged. -Some parts cracked	-Replace with new one -Replace with new one
6	The fork descends without the release valve worked	-The impurities in the oil cause the release valve to be unable to close tight. -Sealing parts worn or damaged. -The release valve is damaged.	-Replace with new oil. -Replace with the new one -Replace with the new one

NOTE: Do not attempt to repair the truck unless you are trained and authorized.

9. WIRING/ CIRCUIT DIAGRAM

a. Electrical circuit diagram

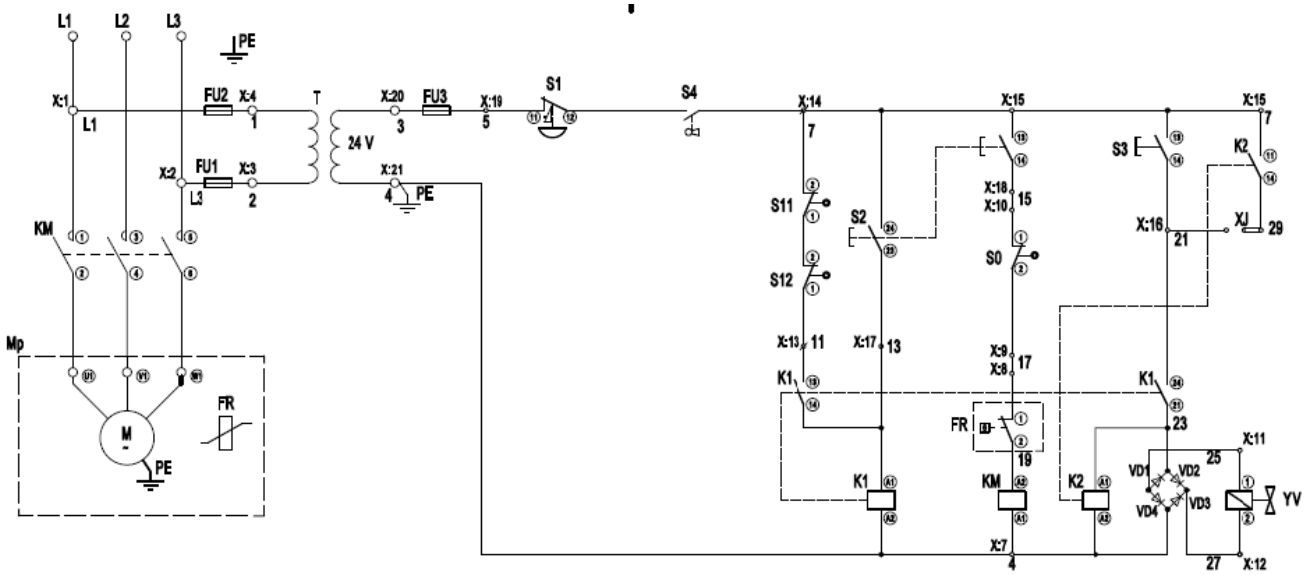

Fig. 5: Electrical diagram

Table 3: Description of electrical diagram

KM	Contactor	S2	UP button switch
Mp	Motor	K1、K2	Contactor
FU1、FU2	Fuse	FR	Thermal relay
T	Transformer	S3	Down button switch
FU3	Fuse	YV	Descending solenoid valve
S4	Key switch	S0	Limit switch
S11、S12	Travel switch	S1	Emergency stop switch

b. Hydraulic circuit

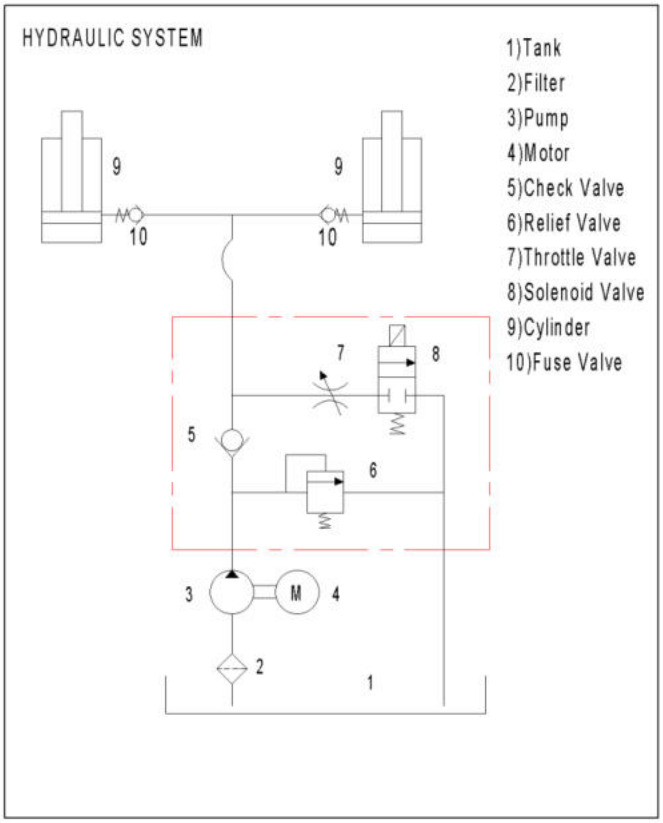

Fig. 6: Hydraulic circuit

10. Spare parts list

Table of HIW2.0_A (2000KG)

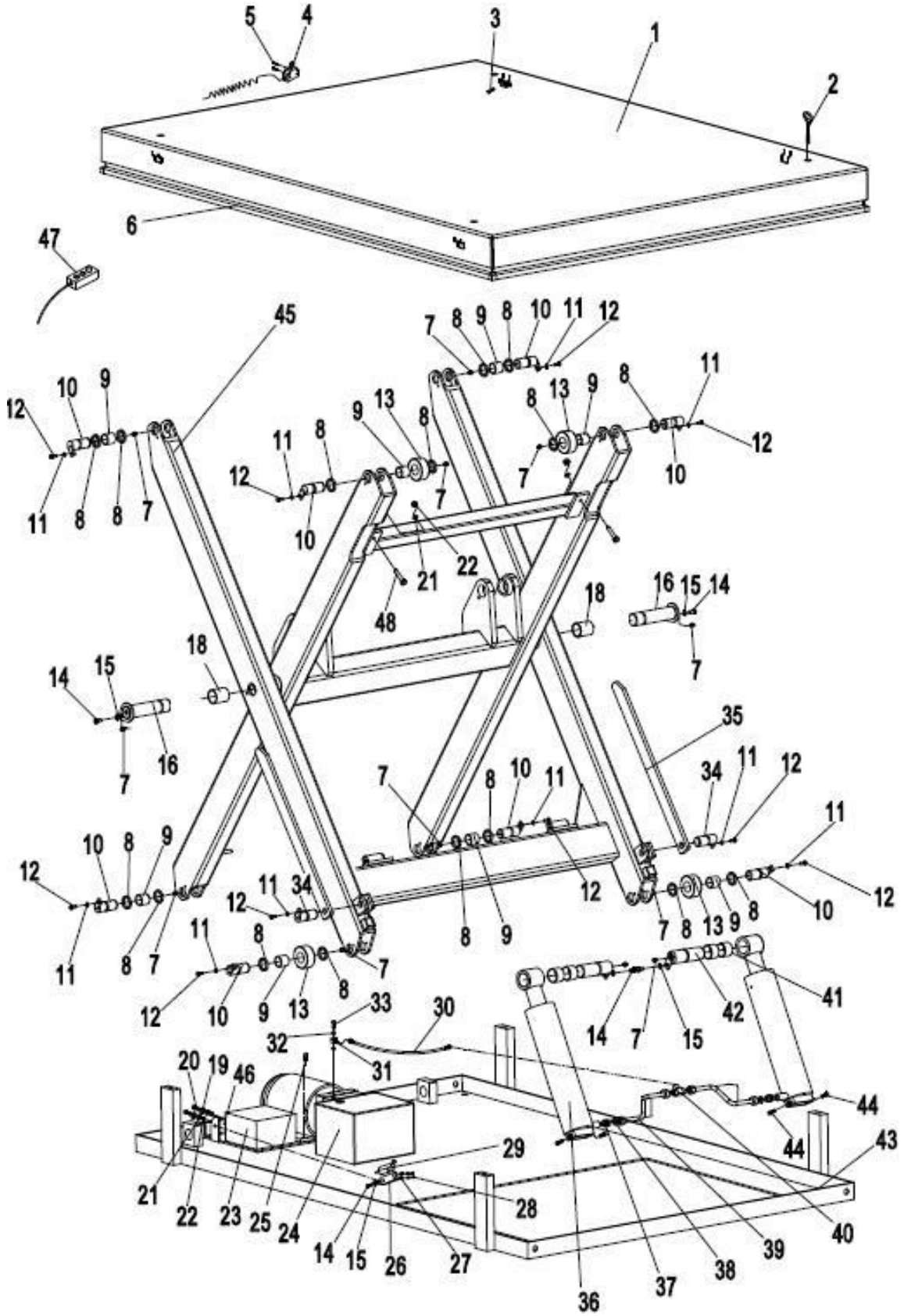

Table of HIW2.0_A (2000KG)

No.	Parts No.	Description	Qty.	Remarks
1	455653510001	Platform welding	1	2000x1500
2	455246510000	Eyebolt	4	M16
3	910100300012	Bolt	4	M6x25
4	920200600002	Micro switch	4	
5	910200500028	Bolt	8	M4x30
6	455653510002	Safety Border	1	2000x1500
7	911200100003	Grease cup	12	
8	456053020000	Washer	16	
9	940500100035	Bushing	8	
10	450353010002	Shaft	8	
11	910400100005	Flat washer	10	
12	910100300010	Screw	10	
13	456053020001	Roller	4	
14	910100300020	Screw	3	
15	910400100006	Flat washer	3	
16	450353010003	Shaft	2	
18	940500100042	Bushing	2	
19	910100300036	Bolt	2	M10x25
20	910400100007	Flat washer	2	10
21	910400500007	Elastic Washer	4	10
22	910300100007	Nut	4	M10
23	921400100039	Controller	1	
24	455624010003	Pump station	1	1.5kW,3.5cc,3.5L
25	910200500034	Bolt	4	M4x8
26	450121520000	Fixed plate	1	
27	910300100003	Nut	2	M4
28	910200500029	Bolt	2	M4x35
29	920200600001	Micro switch	2	CLS-111
30	455624020003	Hose	1	
31	450124020016	Square Joint	1	
32	910800900004	Seal Washer	2	14
33	450124020015	Hollow Screw	1	G1/4x35.5
34	450153010005	Shaft	2	
35	456053020002	Support Plank	2	
36	455624010000	Cylinder	2	
37	950400300015	Straight joint	2	
38	910800900004	Seal Washer	2	14
39	456024020002	Pipe	2	

No.	Parts No.	Description	Qty.	Remarks
40	450324020000	Connection	1	
41	940500100041	Bushing	4	
42	456053010002	Shaft	2	
43	455621510001	Bottom plank	1	2000x1300
44	910100300023	Bolt	4	M8x25
45	455653001001	Fork Arm	1	
46	456021510001	Connect Plank	1	
47	920200700002	Control switch	1	
48	910100300041	Bolt	2	M10x50

Cylinder of HIW2.0_A (2000KG)

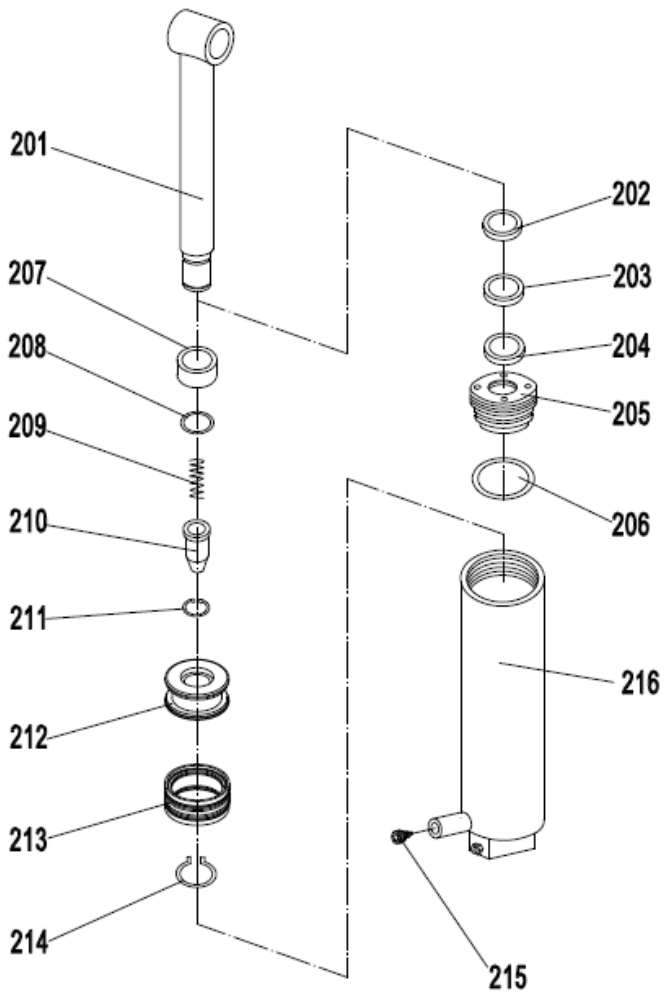

36

Cylinder of HIW2.0_A (2000KG)

No.	Parts No.	Description	Qty.	Remarks
201	455624010002	Piston Rod	1	Φ50xΦ40x405
202	910800400005	Dust Ring	1	50x60x5x7
203	910800500002	Shaft supporting ring	1	50x55x9.7
204	910800300004	Y-Seal	1	Y50x60x8
205	456024020003	Cylinder Cap	1	
206	910800100008	O-Ring	1	80x3.1
207	450124020008	Stop collar	1	
208	910800100012	O-Ring	1	34.2x3
209	450124020007	Spring	1	
210	450124020009	Core of Valve	1	
211	910401400004	Retaining Ring	1	
212	456024020000	Piston	1	Φ62xΦ40x38
213	910800600002	Conbined sealing ring	1	
214	910401300020	Retaining Ring	1	
215	450124020012	Safety Valve	1	
216	455624010001	Housing	1	

Table of HIW2.0_B (2000KG)

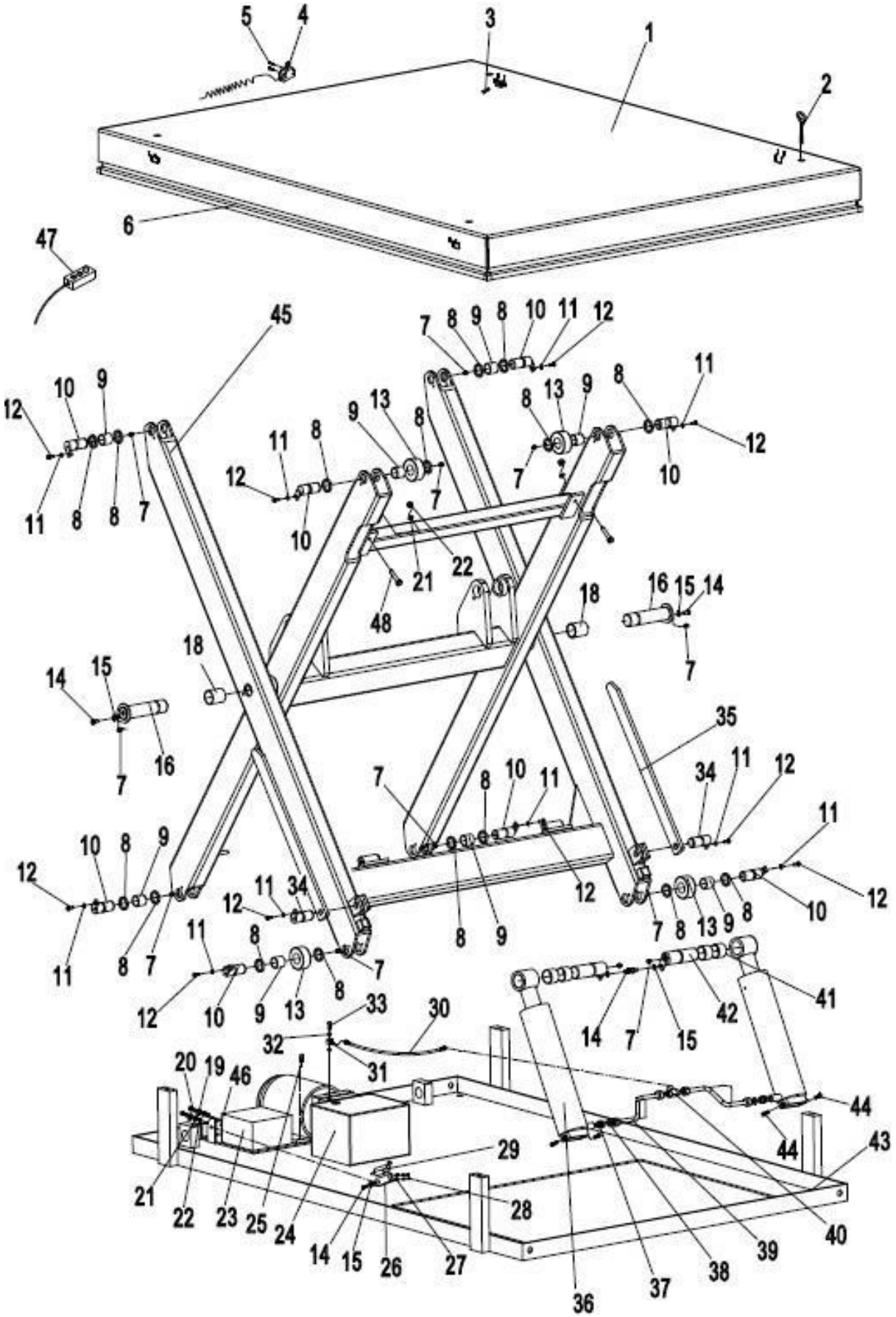

Table of HIW2.0_B (2000KG)

No.	Parts No.	Description	Qty.	Remarks
1	456053510000	Platform welding	1	2200x1500
2	455246510000	Eyebolt	4	M16
3	910100300012	Bolt	4	M6x25
4	920200600002	Micro switch	4	
5	910200500028	Bolt	8	M4x30
6	456053510001	Safety Border	1	2200x1500
7	911200100003	Grease cup	12	M8x1
8	456053020000	Washer	16	
9	940500100035	Bushing	8	
10	450353010002	Shaft	8	
11	910400100005	Flat washer	10	6
12	910100300010	Screw	10	M6X16
13	456053020001	Roller	4	
14	910100300020	Screw	3	M8X16
15	910400100006	Flat washer	3	8
16	450353010003	Shaft	2	
18	940500100042	Bushing	2	Φ40xΦ44x50
19	910100300036	Bolt	2	M10x25
20	910400100007	Flat washer	2	10
21	910400500007	Elastic Washer	4	10
22	910300100007	Nut	4	M10
23	921400100039	Controller	1	
24	456024010001	Pump station	1	1.5kW,3.5cc,5L
25	910200500034	Bolt	4	M4x8
26	450121520000	Fixed plate	1	
27	910300100003	Nut	2	M4
28	910200500029	Bolt	2	M4x35
29	920200600001	Micro switch	2	
30	456024020001	Hose	1	
31	450124020016	Square Joint	1	
32	910800900004	Seal Washer	2	14
33	450124020015	Hollow Screw	1	G1/4x35.5
34	450153010005	Shaft	2	
35	456053020002	Support Plank	2	
36	456024010000	Cylinder	2	
37	950400300015	Straight joint	2	
38	910800900004	Seal Washer	2	14
39	456024020002	Pipe	2	M18x244

No.	Parts No.	Description	Qty.	Remarks
40	450324020000	Connection	1	
41	940500100041	Bushing	4	40x44x30
42	456053010002	Shaft	2	
43	456021510000	Bottom plank	1	2200x1300
44	910100300023	Bolt	4	M8x25
45	456053001000	Fork Arm	1	
46	456021510001	Connect Plank	1	
47	920200700002	Control switch	1	
48	910100300041	Bolt	2	M10x50

Cylinder of HIW2.0_B(2000KG)

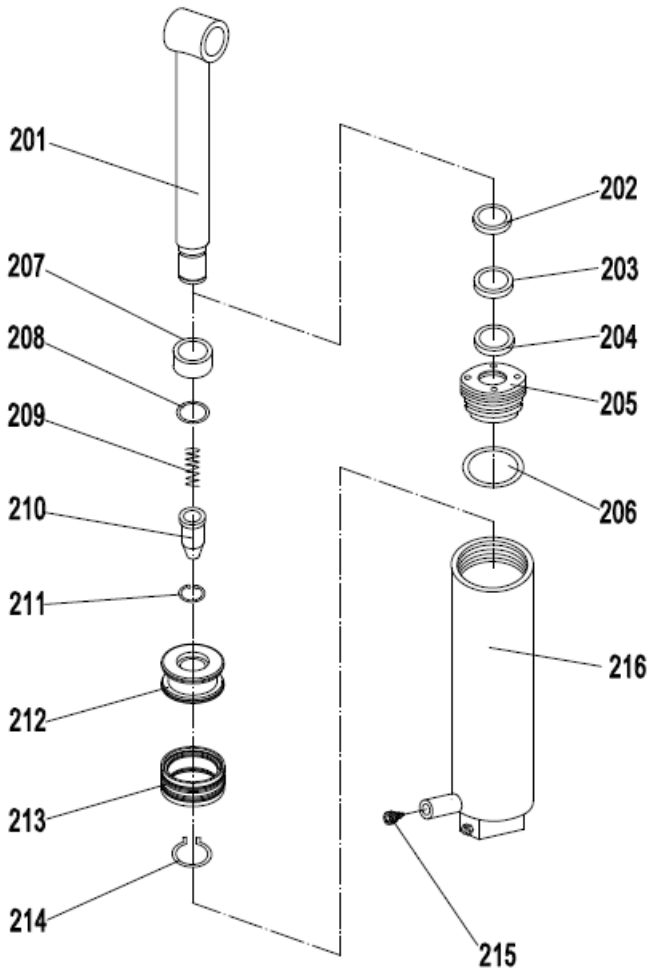

36

Cylinder of HIW2.0_B (2000KG)

No.	Parts No.	Description	Qty.	Remarks
201	456024010004	Piston Rod	1	Φ50xΦ40x470
202	910800400005	Dust Ring	1	50x60x5x7
203	910800500002	Shaft supporting ring	1	50x55x9.7
204	910800300004	Y-Seal	1	50x60x8
205	456024020003	Cylinder Cap	1	
206	910800100008	O-Ring	1	80x3.1
207	450124020008	Stop collar	1	
208	910800100012	O-Ring	1	34.2x3
209	450124020007	Spring	1	
210	450124020009	Core of Valve	1	
211	910401400004	Retaining Ring	1	
212	456024020000	Piston	1	Φ62xΦ40x38
213	910800600002	Conbined sealing ring	1	
214	910401300020	Retaining Ring	1	
215	450124020012	Safety Valve	1	
216	456024010002	Housing	1	

Table of HIW3.0_A (3000KG)

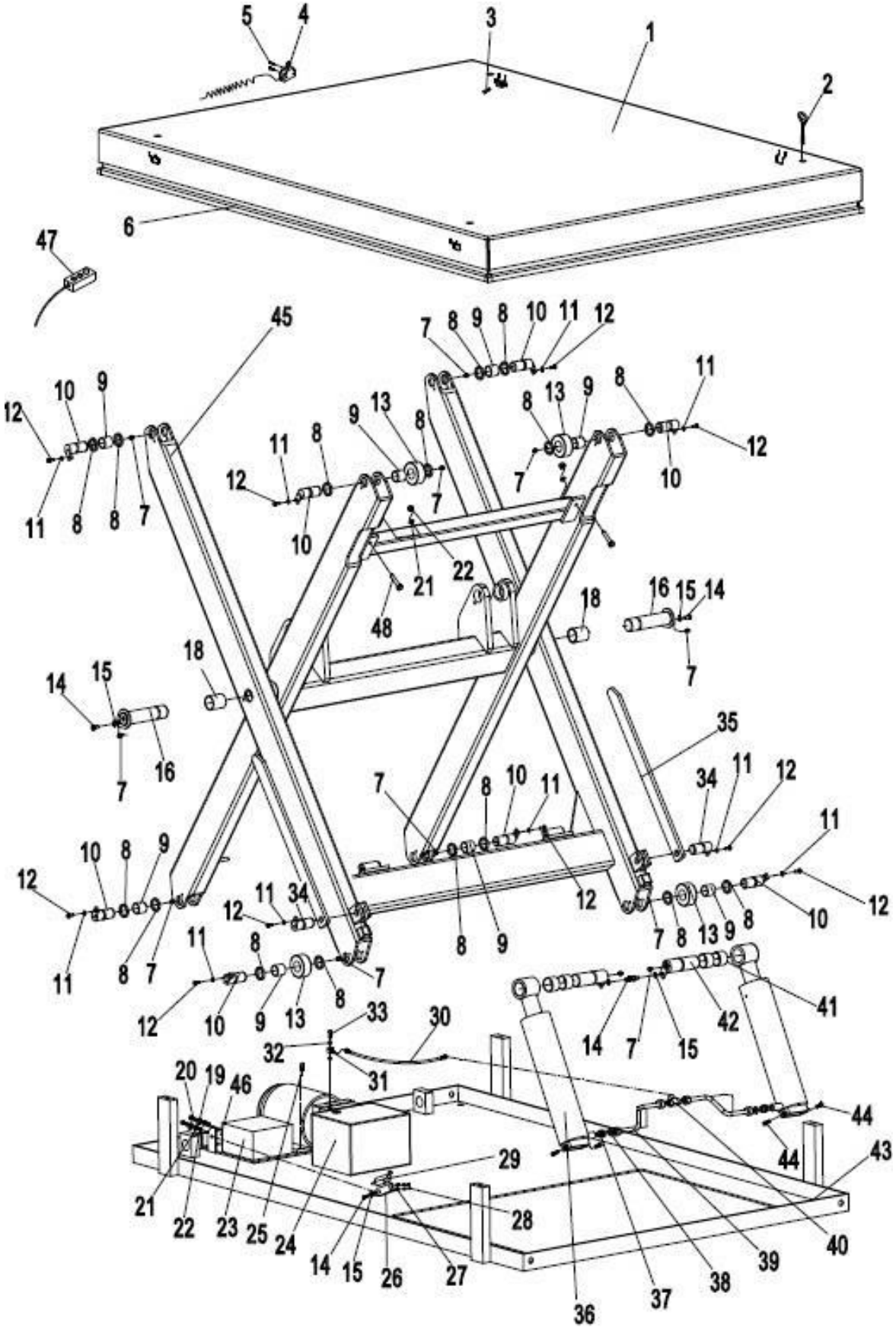

Table of HIW3.0_A (3000KG)

No.	Parts No.	Description	Qty.	Remarks
1	455853510001	Platform welding	1	2000x1500
2	455246510000	Eyebolt	4	M16
3	910100300012	Bolt	4	M6x25
4	920200600002	Micro switch	4	
5	910200500028	Bolt	8	M4x30
6	455653510002	Safety Border	1	2000x1500
7	911200100003	Grease cup	12	
8	456053020000	Washer	16	
9	940500100071	Bushing	8	
10	456253010002	Shaft	8	
11	910400100005	Flat washer	10	6
12	910100300010	Screw	10	M6x16
13	456253020001	Roller	4	
14	910100300020	Screw	3	M8x16
15	910400100006	Flat washer	3	8
16	456253010003	Shaft	2	
18	940500100044	Bushing	2	50x55x60
19	910100300036	Bolt	2	M10x25
20	910400100007	Flat washer	2	10
21	910400500007	Elastic Washer	4	10
22	910300100007	Nut	4	M10
23	921400100039	Controller	1	
24	456024010001	Pump station	1	1.5kW,3.5cc,5L
25	910200500034	Bolt	4	M4x8
26	450121520000	Fixed plate	1	
27	910300100003	Nut	2	M4
28	910200500029	Bolt	2	M4x35
29	920200600001	Micro switch	2	
30	455624020003	Hose	1	
31	450124020016	Square Joint	1	
32	910800900004	Seal Washer	2	
33	450124020015	Hollow Screw	1	
34	450153010005	Shaft	2	
35	456053020002	Support Plank	2	
36	455824010000	Cylinder	2	
37	950400300015	Straight joint	2	
38	910800900004	Seal Washer	2	
39	456224020002	Pipe	2	M18x194

No.	Parts No.	Description	Qty.	Remarks
40	450324020000	Connection	1	
41	940500100041	Bushing	4	
42	456053010002	Shaft	2	
43	455821510001	Bottom plank	1	2000x1300
44	910100300023	Bolt	4	
45	455853001001	Fork Arm	1	
46	456021510001	Connect Plank	1	
47	920200700002	Control switch	1	
48	910100300041	Bolt	2	

Cylinder of HIW3.0_A (3000KG)

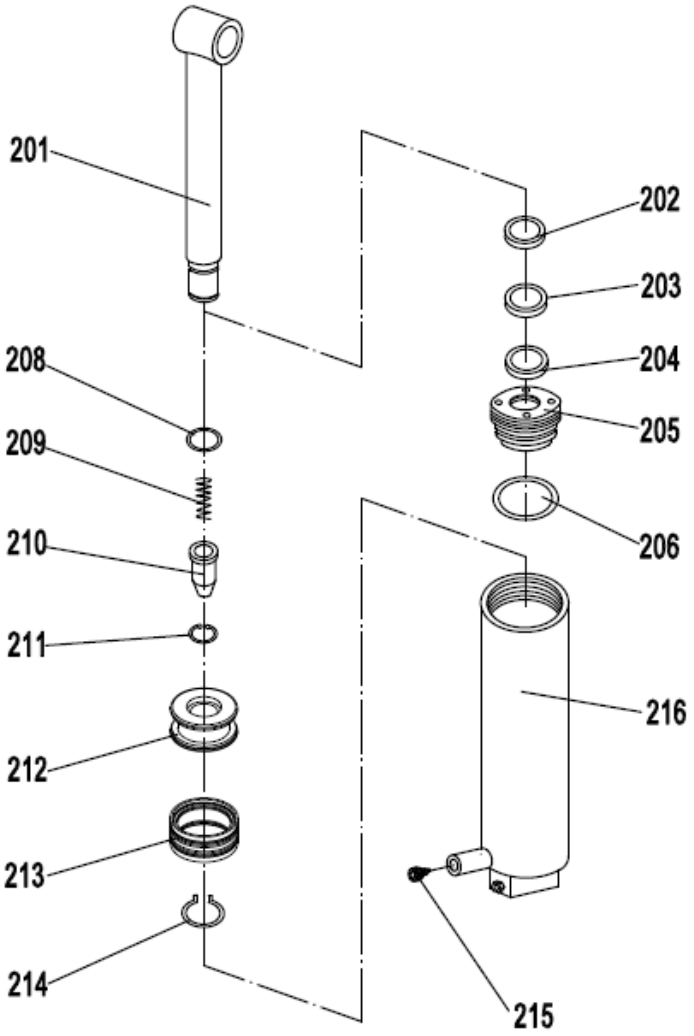

36

Cylinder of HIW3.0_A (3000KG)

No.	Parts No.	Description	Qty.	Remarks
201	455824010002	Piston Rod	1	Φ50xΦ40x410
202	910800400005	Dust Ring	1	
203	910800500002	Shaft supporting ring	1	
204	910800300004	Y-Seal	1	
205	450124020006	Cylinder Cap	1	
206	910800100014	O-Ring	1	
208	910800100012	O-Ring	1	
209	450124020007	Spring	1	
210	450124020009	Core of Valve	1	
211	910401400004	Retaining Ring	1	
212	456024020000	Piston	1	Φ65xΦ40x40
213	910800600004	Conbined sealing ring	1	
214	910401300020	Retaining Ring	1	
215	450124020012	Safety Valve	1	
216	455824010001	Housing	1	

Table of HIW3.0_B (3000KG)

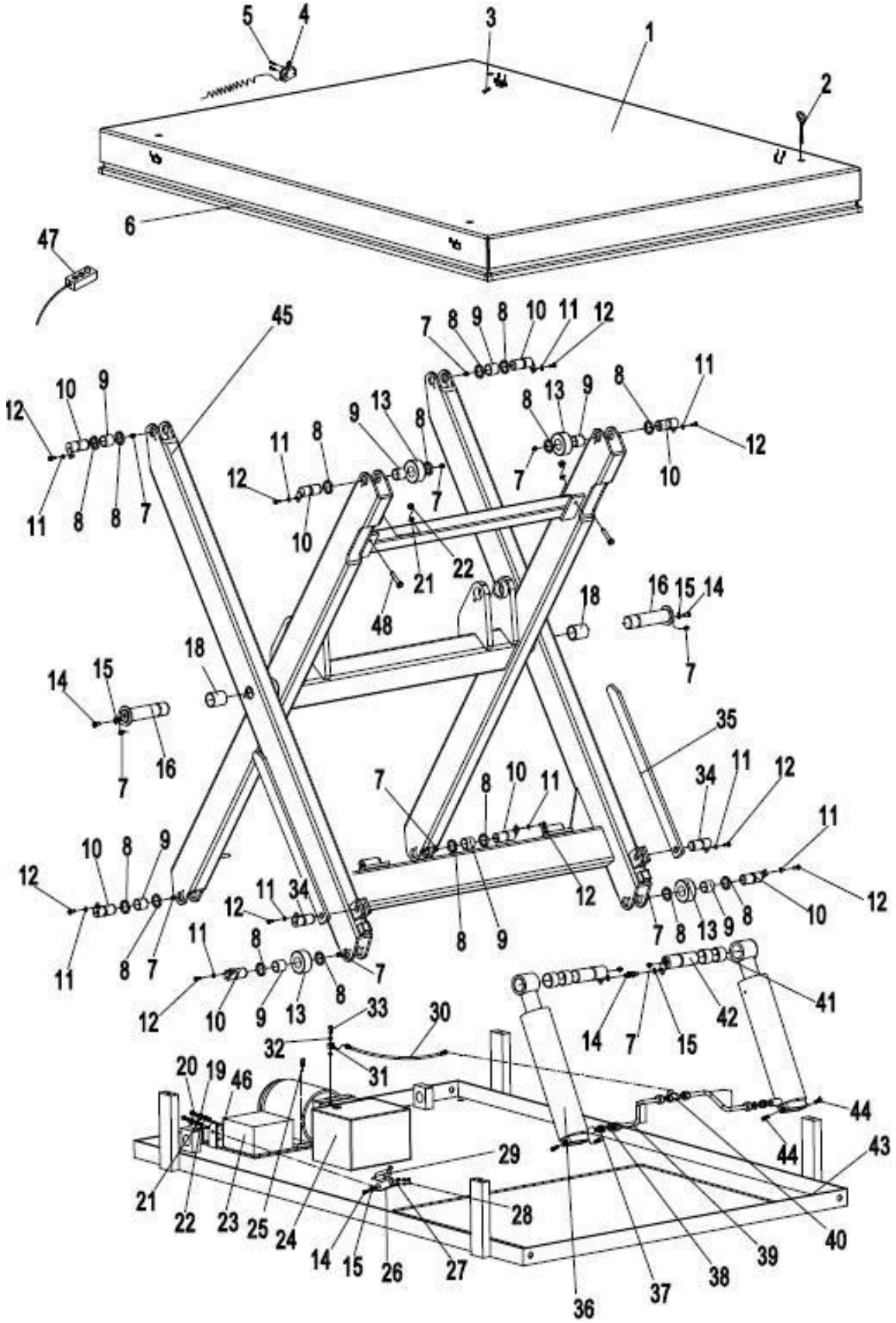

Table of HIW3.0_B (3000KG)

No.	Parts No.	Description	Qty.	Remarks
1	456253510000	Platform welding	1	2200x1500
2	455246510000	Eyebolt	4	M16
3	910100300012	Bolt	4	
4	920200600002	Micro switch	4	
5	910200500028	Bolt	8	
6	456053510001	Safety Border	1	2200x1500
7	911200100003	Grease cup	12	
8	456053020000	Washer	16	
9	940500100071	Bushing	8	
10	456253010002	Shaft	8	
11	910400100005	Flat washer	10	
12	910100300010	Screw	10	
13	456253020001	Roller	4	
14	910100300020	Screw	3	
15	910400100006	Flat washer	3	
16	456253010003	Shaft	2	
18	940500100044	Bushing	2	
19	910100300036	Bolt	2	
20	910400100007	Flat washer	2	
21	910400500007	Elastic Washer	4	
22	910300100007	Nut	4	
23	921400100039	Controller	1	
24	456024010001	Pump station	1	1.5kW,3.5cc,5L
25	910200500034	Bolt	4	
26	450121520000	Fixed plate	1	
27	910300100003	Nut	2	
28	910200500029	Bolt	2	
29	920200600001	Micro switch	2	
30	456024020001	Hose	1	
31	450124020016	Square Joint	1	
32	910800900004	Seal Washer	2	
33	450124020015	Hollow Screw	1	
34	450153010005	Shaft	2	
35	456053020002	Support Plank	2	
36	456224010000	Cylinder	2	
37	950400300015	Straight joint	2	
38	910800900004	Seal Washer	2	
39	456224020002	Pipe	2	M18x194

No.	Parts No.	Description	Qty.	Remarks
40	450324020000	Connection	1	
41	940500100041	Bushing	4	
42	456053010002	Shaft	2	
43	456221510000	Bottom plank	1	2200x1300
44	910100300023	Bolt	4	
45	456253001000	Fork Arm	1	
46	456021510001	Connect Plank	1	
47	920200700002	Control switch	1	
48	910100300041	Bolt	2	

Cylinder of HIW3.0_B (3000KG)

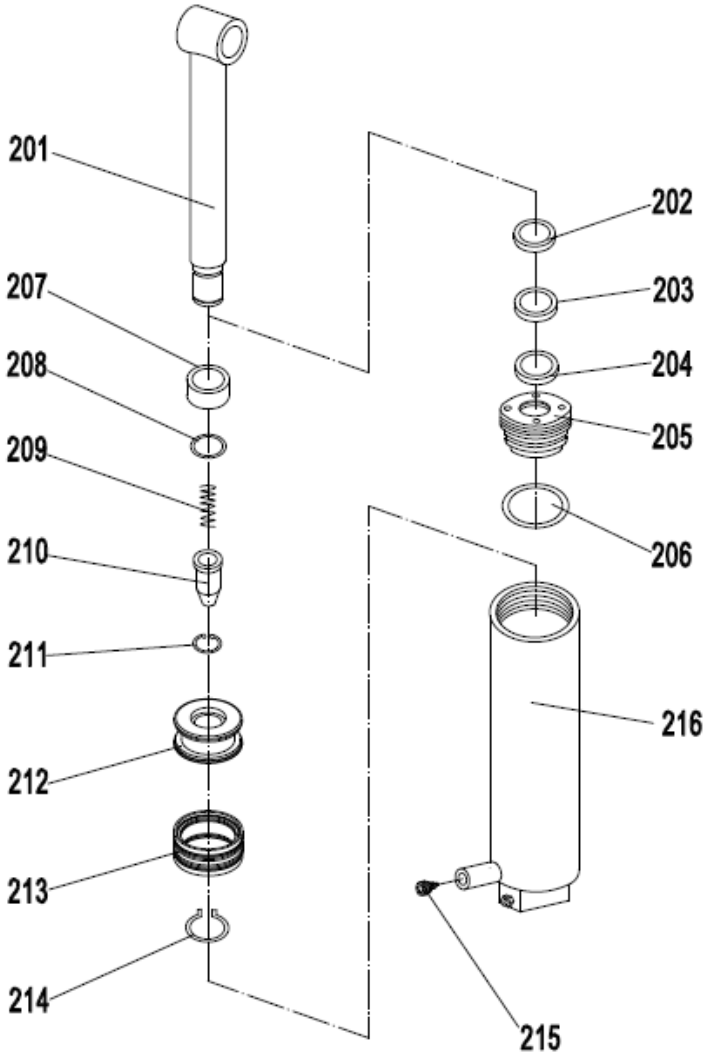

36

Cylinder of HIW3.0_B (3000KG)

No.	Parts No.	Description	Qty.	Remarks
201	456224010004	Piston Rod	1	Φ50xΦ40x493
202	910800400005	Dust Ring	1	
203	910800500002	Shaft supporting ring	1	
204	910800300004	Y-Seal	1	
205	450124020006	Cylinder Cap	1	
206	910800100014	O-Ring	1	
207	450124020008	Stop collar	1	
208	910800100012	O-Ring	1	
209	450124020007	Spring	1	
210	450124020009	Core of Valve	1	
211	910401400004	Retaining Ring	1	
212	456024020000	Piston	1	Φ65xΦ40x40
213	910800600004	Conbined sealing ring	1	
214	910401300020	Retaining Ring	1	
215	450124020012	Safety Valve	1	
216	456224010002	Housing	1	

Pump Station

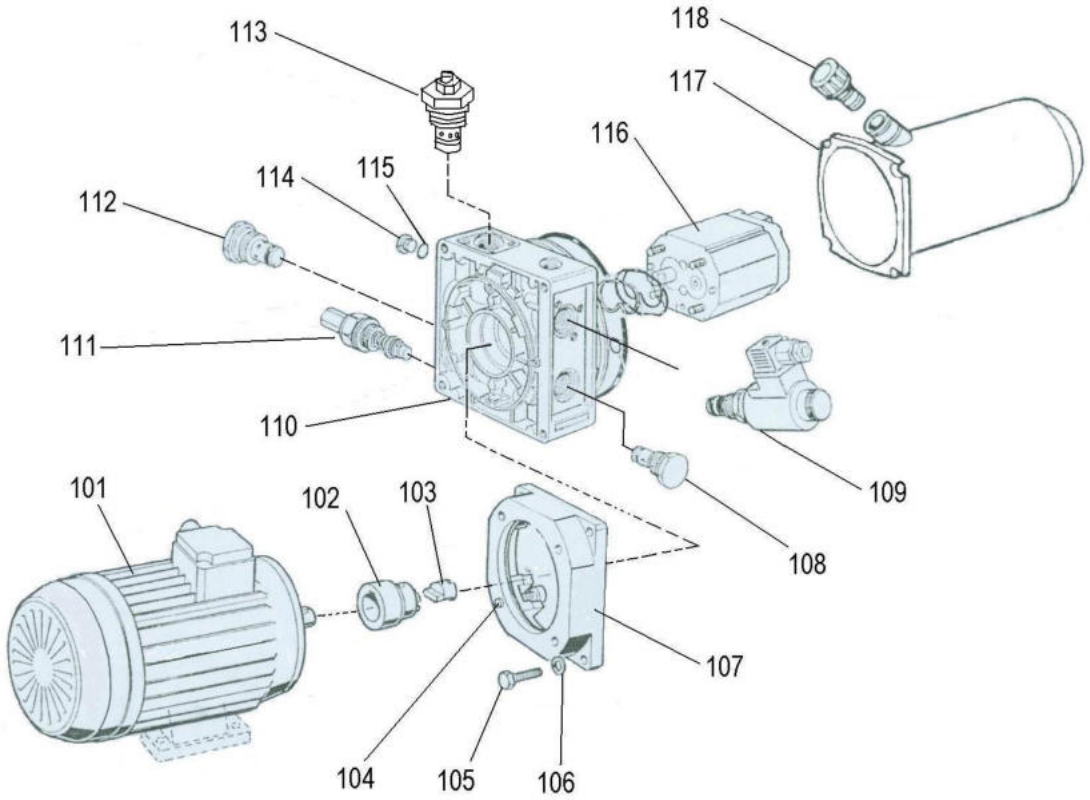

Pump Station

No	Description	Qty.	No	Description	Qty.
101	Motor (1.5KW380V)	1	111	Relief valve	1
102	Connecter	1	112	Throttle valve	1
103	Connecter	1	113	Shut-off Valve	1
104	Bolt	4	114	plug	1
105	Bolt	4	115	O-ring	1
106	Elastic Washer	4	116	Gear pump	1
107	Plate	1	117	Oil tank	1
108	Check valve	1	118	Breather cap	1
109	Solenoid valve	1			
110	Central manifold	1			

11. DECLARATION OF CONFORMITY(valid, if sold within the EU)

[GB] CE Declaration of Conformity

The signatory hereby declares that the specified machine conforms to the EU Directive 2006/42/EC (Machine Directive) and 2014/30/EU (Electro-Magnetic Compatibility, EMC) including their amendments as translated into national legislation of the member countries. The signatory is individually authorized to compile the technical documents.

[D] EG-KONFORMITÄTSERKLÄRUNG

Der Unterzeichner bescheinigt hiermit, dass die im Einzelnen bezeichnete Maschine den Europäischen Richtlinien 2006/42/EG (Maschinenrichtlinie) und 2014/30/EU (Elektromagnetische Verträglichkeit - EMV) einschließlich deren Änderungen sowie dem entsprechenden Rechtserlaß zur Umsetzung der Richtlinien in nationales Recht entspricht. Der Unterzeichner ist bevollmächtigt, die technischen Unterlagen zusammenzustellen.

[E] DECLARACIóN DE CONFORMIDAD CE

El signatario certifico por medio de la presente que la máquina especificada cumple con las Normas Europeas 2006/42/CE (Normativa para maquinarias) y 2014/30/EU (Compatibilidad electromagnética), incluyendo sus respectivas odificaciones, así como con el decreto-ley para la adaptación de las normas al derecho nacional. El signatario dispone de una autorización individual que le permite compilar la documentación técnica.

[F] DECLARATION DE CONFORMITE CE

Par la présente déclaration, les soussignés certifient que le machines spécifié ci-dessus est conforme à la loi et aux directives européennes 2006/42/CE (directive sur les machines) et 2014/30/EU (compatibilité électromagnétique - CEM), y compris aux modifications qui y sont apportées et à l'arrêté autorisant sa transposition en droit national. Chaque signataire est habilité à établir individuellement la documentation technique.

[NL] EG-CONFORMITEITSVERKLARING

Ondergetekenden verklaren hierbij dat - volgens de nationale wetgeving van de Lidstaten - de hierboven vermelde opgegeven machina beantwoordt aan de bepalingen qua veiligheid bij machines (EG richtlijn 2006/42/EC) en electro-magnetische compatibilteit (EG richtlijn 2014/30/EU). Ondergetekenden zijn ieder individueel gemachtigd het technisch dossier samen te stellen.

[P] DECLARAÇÃO DE CONFORMIDADE CE

Pela presente, os signatários certificam que o máquina especificado está conforme às Directivas Europeias 2006/42/CE („Máquinas") e 2014/30/EU („Inocuidade Electromagnética - IEM"), incluindo as alterações das mesmas e o respectivo decreto-lei para a transposição em lei nacional. Cada um dos signatários está autorizado a proceder à elaboração da documentação técnica.

[I] DICHIARAZIONE DI CONFORMITÀ CE

I sottoscritti dichiarano che il veicolo per trasporti interni a macchina specificato soddisfa le Direttive Europee 2006/42/EC (Direttiva Macchine) e 2014/30/EU (Compatibilità elettromagnetica - EMV) comprese le relative modifiche, come pure il rispettivo decreto legislativo per la conversione delle direttive in diritto nazionale. I sottoscritti sono singolarmente autorizzati alla creazione della documentazione tecnica.

[BG] ЕВРОПЕЙСКА ОБЩНОСТ - ДЕКЛАРАЦИЯ ЗА СЪОТВЕТСТВИЕ

Подписаните удостоверяват с настоящето, че подробно описаното машина средство отговаря на европейския норматив 2006/42/EG (норматив за машини) и на2014/30/EU (електро-магнетична съвместимост), включително с техните промени, както и на съответния указ за прилагане на нормативите в националното право. Подписаните при това са упълномощении поотделно да съставят техническата документация.

[CZ] EG - PROHLÁŠENÍ O SHODĚ

Níže podepsaný tímto potvrzuje, že podrobný popis uvedené stroje odpovídá Evropským směrnicím 2006/42/EC (směrnice pro stroje) a 2014/30/EU (elektromagnetická interference - EMV) včetně jejich pozdějších úprav, jakož i příslušným právním výnosům pro uplatnění příslušné směrnice v rámci národního práva. Každý z podepsaných jsou jednotlivě zplnomocněni k vytvoření technických podkladů.

[DK] EF-OVERENSSTEMMELSESERKLÆRING

Undertegnede attesterer hermed, at det specificerede maskine stemmer overens med de Europæiske Direktiver 2006/42/EU (maskindirektiv) og 2014/30/EU (elektromagnetisk kompatibilitet - EMC) samt med den modsvarende lovvedtagelse til implementering af direktiver i den nationale lovgivning. De undertegnede er hver for sig beføjet til at sammenstille de tekniske dokumenter.

[EST] EL vastavusavaldus

Allakirjutanud tõendavad käesolevaga, et üksikasjaliselt kirjeldatud täpsustatud masin vastab Euroopa direktiividele 2006/42/EÜ (Direktiiv masinate kohta) ja 2014/30/EU (Elektromagnetiline sobivus - EMS) kaasa arvatud nende muudatused ja nendele vastavatele õigusmäärustele direktiivide muutmiseks siseriiklikuks õiguseks. Iga allakirjutanu üksikult on volitatud koostama tehnilist dokumentatsiooni.

[FIN] EU-YHDENMUKAISUUSSELOSTUS

Allekirjoittaneet todistavat täten, että kukin erikseen mainittu omalla voimanlähteellä varustettu tehdaskone vastaa EU-direktiivien 2006/42/EC (koneenrakennusdirektiivi) ja 2014/30/EU (sähkömagneettinen yhteensopivuus – EMC) määräyksiä sekä niiden muutoksia ja niiden kansalliseen lainsäädäntöön soveltamista koskevaa oikeussääntöä. Jokaisella allekirjoittaneista on oikeus itsenäisesti laatia asiaankuuluvia teknisiä asiakirjoja.

[GR] ΔΗΛΩΣΗ ΣΥΜΜΟΡΦΩΣΗΣ ΕΟΚ

Οι υπογράφοντες βεβαιώνουν διά της παρούσης ότι το συγκεκριμένο μηχάνημα συμμορφώνεται προς την Κοινοτική Οδηγία 2006/42/ΕΚ («Μηχανήματα») και 2014/30/EU (Ηλεκτρομαγνητικής Συμβατότητας, ΗΜΣ), καθώς και οι τροποποιήσεις τους, όπως μεταφράστηκε στην εθνική νομοθεσία των χωρών μελών. Οι υπογράφοντες είναι σε κάθε περίπτωση εξουσιοδοτημένοι ατομικά να καταρτίσουν τα τεχνικά έγγραφα.

[H] EU KONFORMITÁSI NYILATKOZAT

Alulírottak ezennel igazolják, hogy a részletesen leírt a megadott gép megfelel a 2006/42/EC (Gép-Irányelv) és a 2014/30/EU (Elektromágneses összeférhetőség - EMV) Európai Irányelveknek, beleértve azok módosításait, valamint az irányelvek nemzeti jogba történő átültetésére irányuló megfelelő jogi rendelkezést. Továbbá az alulírottak mindegyike rendelkezik meghatalmazással arra nézve, hogy összeállíthatja a műszaki dokumentációt.

[LT] ES atitikimo deklaracija

Žemiau pasirašę asmenys patvirtina, kad atskirai aprašytas nurodyta mašina atitinka Europos Sąjungos direktyvas 2006/42/EB (Mašinų direktyva) ir 2014/30/EU (Elektromagnetinis suderinamumas – EMS) įskaitant jų pakeitimus, o taip pat ir atitinkamą teisės aktą dėl direktyvų įgyvendinimo nacionalinėje teisėje. Kiekvienas iš pasirašiusių asmenų turi teisę ruošti techninę dokumentaciją.

[LV] ES atbilstības deklarācija

Ar zemāk redzamajiem parakstiem tiek apliecināts, ka norādīts mašīna atbilst Eiropas Savienības normatīvām 2006/42/EG (Mašīnu normatīvas) un 2014/30/EU (Elektromagnētiskā atbilstība – EMV), ieskaitot to izmaiņas, kā arī atbilstošos tiesiskos rīkojumus normatīvu pielāgošanai nacionālajai likumdošanai. Parakstu īpašnieki ir atsevišķi pilnvaroti sastādīt tehniskās dokumentācijas.

[N] EU-KONFORMITETSERKLÆRING

Undertegnede bekrefter hermed at de enkelte betegnede maskin med kraftdrift tilsvarer de europeiske retningslinjene 2006/42/EC (maskinretningslinje) og 2014/30/EU (elektromagnetisk fordraglighet - EMV) inklusiv disses endringer og den tilsvarende rettsforordning til omsetning av nasjonal rett. Hver undertegnede er fullmektig til å sette sammen de tekniske dokumentene.

[PL] DEKLARACJA ZGODNOŚCI WE

Niżej podpisani deklarują, że poniżej opisana maszyna spełnia wymagania określone w dyrektywach Europejskich 2006/42/EC (Dyrektywa Maszynowa) i 2014/30/EU (Kompatybilności elektromagnetycznej - EMC) wraz z ich późniejszymi zmianami oraz odpowiednimi rozporządzeniami mającymi na celu przeniesienie tych dyrektyw do prawa krajów członkowskich. Sygnatariusz jest indywidualnie upoważniony do zestawiania dokumentacji technicznej.

[RO] DECLARAŢIE DE CONFORMITATE CE

Subsemnaţii adeveresc prin prezenta că vehiculul de specificat maşină descris individual corespunde directivelor europene 2006/42/CE (Directiva privind maşinile) şi 2014/30/EU (Compatibilitatea electromagnetică - CEM) inclusiv modificărilor lor precum şi actului legislativ corespunzător prentru transpunerea directivelor în drept naţional. Subsemnaţii sunt fiecare în parte împuterniciţi să întocmească documentaţia tehnică.

[RUS] Декларация соответствия стандартам ЕС

Настоящим лица, подписавшие документ, удостоверяют, что машина с указанной спецификацией соответствует европейским стандартам 2006/42/EG (Транспортная директива) и 2014/30/EU (Электромагнитная совместимость - EMC), включая изменения в них, а также соответствующим национальным стандартам и нормам. Каждое по отдельности лицо, подписавшее документ, имеет полномочия для составления технической документации.

[S] EG-KONFORMITETSFÖRKLARING

Undertecknarna intygar härmed att det i detalj betecknade maskin uppfyller de Europeiska direktiven 2006/42/EG (Maskindirektiv) och 2014/30/EU (Elektromagnetisk tålighet - EMV), inklusive ändringarna i detta och den motsvarande rättsförordningen för att omsätta direktiven i nationell rätt. Undertecknarna har var för sig fullmakt att sammanställa den tekniska dokumentationen.

[SK] vyhlásenie o zhode

Dolu podpísaní týmto potvrdzujeme, že podrobný popis uvedené stroje Zodpovedá Európskym smerniciam 2006/42/EC (ernica pre stroje) a 2014/30/EU (elektromagnetická tolerancia – EMV) vrátane jeho neskorších úprav, rovnako zodpovedá aj príslušným právnym nariadeniam na uplatnenie smerníc v rámci národného práva. Každý z podpísaných je jednotlivo splnomocnený na vytvorenie technických podkladov.

[SLO] EU IZJAVA O SKLADNOSTI

Podpisani s tem potrjujemo, da posamično označeno določeno stroj vozilo odgovarja Evropski direktivi 2006/42/EC (Direktiva o strojih) in 2014/30/EU (Elektromagnetna skladnost - EMV) vključno z njihovimi spremembami ter ustrezno pravno uredbo o prevzemu smernic v nacionalno pravo. Podpisniki so vsakokrat posamezno pooblaščeni za izdajanje tehnične dokumentacije.

[TR] AB Uygunluk Açıklaması

İmza sahibi şahıslar, ayrıntıları belirtilen makine aracının, 2006/42/EC (Makine Yönergesi) ve 2014/30/EU (Elektromanyetik Uyumluluk – EMC) no'lu Avrupa Yönergelerine ve bunların değişiklik sonucu oluşan metinlerine ve yönergelerin milli hukuk hükümlerine dönüştürülmesine dair ilgili hukuk kararnamesine uygun olduğunu tasdik ederler. İmza sahibi şahıslar teknik dosyaları bir araya getirmek için münferiden vekil tayin edildi.

(1) Type/ Typ/ Tipo/ Modello/ Tyyppi/ Tipo / ΤΥΠΟΣ/ Típus/ Tip/ Тип/ Tips/ Tipas/ Tüüp:
(2) Serial No./ Serien-Nr./ N°. de série/ Serienummer/ Nº de serie/ Numero di serie/ Serienr./ Sarjanro/ αυξάνων αριθμός/ Seriové číslo/ Szériaszám/ Nr.Seryjny/ Serijska številka/ Výrobné číslo/ Серийный номер/ Seri No./ Seerianr./ Sērijas Nr./ Serijos numeris:
(3) Year of constr./ Baujahr/ Année de constr./ Bouwjaar/ Año de constr./ Anno di costruzione/ Produktionsår/ Byggeår/ Tillverkningsår/ Valmistusvuosi / Ano de fabrico / έτος κατασκευής/ Rok výroby/ Gyártási év/ Rokprodukcji / Letnik / Год изготовления / Üretim yılı / Väljalaskeaasta / Izgatavošanas gads / Gamybosmetai
(4) Manufacturer or his authorized representative in Community/ Hersteller oder in der Gemeinschaft ansässiger Vertreter/ Fabricant ou son mandataire établi dans la Communauté/ Fabrikant of zijn in de Gemeenschap gevestigde gemachtigde/ Fabricante o representante establecido en la Comunidad/ Construtor ou Representante estabelecido na Comunidade/ Costruttore oppure il suo rappresentante nella Comunità/ Fabrikant eller dennesi Fællesskabet etablerede befuldmægtigede/ Produsent eller agent innen felleskapet/ Tillverkare eller representant inom EU/ Valmistaja tai yhteisömaassa oleva edustaja / V˘robce nebo jeho zastoupení/ Gyártó / producent albo jego przedstawiciel w EG (Wspólnota Europejska)/ Καηαζθεηαζηήο ή όκηηνο ηνηηηθώλ αληηπξνζώπσλ/ Üretici ya da Bölgedeki Yetkili Temsilci/ Proizvajalec ali pooblaščeni zastopnik s sedežem v EU/ Výrobca alebo zástupca so stálym bydliskom v EÚ / Изготовитель или его представитель, зарегистрированный в стране Содружества/ Tootja või organisatsioonis paiknev esindaja/ Ražotājs vai vietējais uzņēmuma pārstāvis / Gamintojas arba šalyje reziduojantis atstovas:
(5) Date/ Datum/ Data/ Fecha/ datum/ Dato/ päiväys/ Kuupäev/ Datums/дата / Dátum/ dátum/ tarih/ ημερομηνία
(6) Authorised signatory/ Im Auftrag/ pour ordre/ Incaricato/ Por orden de/ por procuração/ op last van/ på vegne af/ på uppdrag/ Etter oppdrag/ psta./ Ülesandel / pavedus / v.i. / По поручению / megbízásából /длъжностно лице / z pověření / z poverenia / po nalogu / na polecenie / din sarcina / adına / θαη' ελληνή

(1) Type: **XX XX – Self-propelled industrial truck**
(2) Serial No: **XXXXXXXX**
(3) Year of constr.: **YYYY**
(4) Manufacturer or his authorized representative in Community:
Company name/ Street / Postal code Town/ Country
(5) Date: **YYYY.MM.DD**
(6) Authorized signatory: **Mr. Sample**

Sample
If you can read this text,
your declaration is not complete.
In this case please ask for a copy