Parts & Components Manual

Scissor lifts

SC08HC/SC08EC/SC08HC-Li/SC08EC-Li

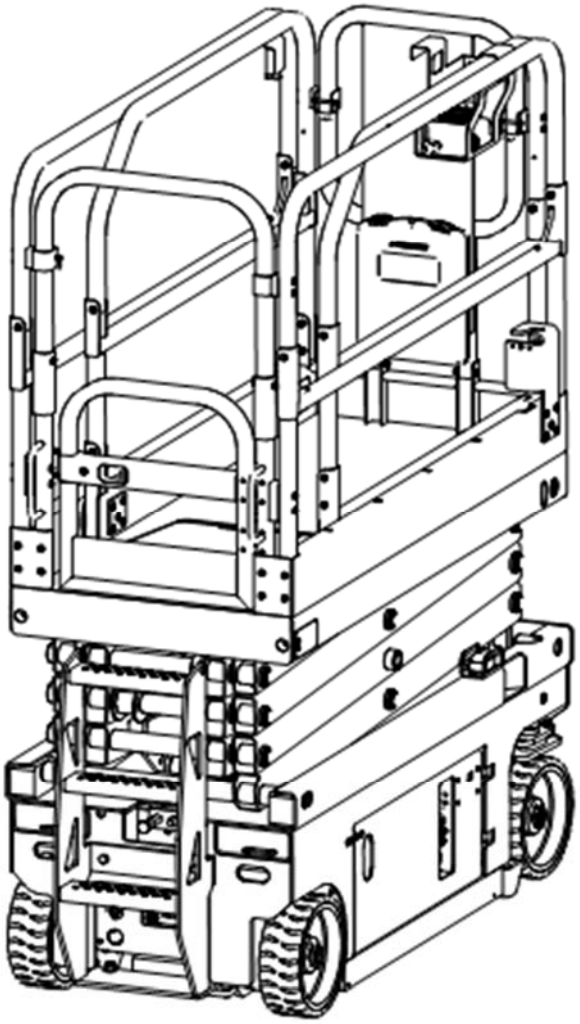

Version 08/2022

SC08EC-BPT-010-EN

Contents

Figure 1.1 Parts and components of chassis 1

Figure 2.1 Hydraulic tank assembly（SC08HC） 4

Figure 2.2 Hydraulic tank assembly（SC08EC） 6

Figure 3.1 Rear wheel（SC08HC） 8

Figure 3.2 Rear wheel（SC08EC） 9

Figure 4 Pothole protection mechanism 11

Figure 5.1 Battery box assembly（SC08HC/ SC08EC） 13

Figure 5.2 Battery box assembly（SC08HC-Li/ SC08EC-Li） 15

Figure 6.1 Steering mechanism（SC08HC） 17

Figure 6.2 Steering mechanism（SC08EC） 19

Figure 7 Parts and components of scissors 21

Figure 8 Extended platform assembly 24

Figure 9 Main platform assembly 26

Figure 10.1 Main control valve block（SC08HC） 29

Figure 10.2 Main control valve block（SC08EC） 31

Figure 11 Platform controller components 33

Figure 12 Pedal lock 35

Figure 13.1 Wiring harness（SC08HC） 36

Figure 13.2 Wiring harness（SC08EC） 39

Figure 13.3 Wiring harness（SC08HC-Li） 42

Figure 13.4 Wiring harness（SC08EC-Li） 45

Figure 14 Cylinder 48

Figure 15.1 Power box piping 50

Figure 15.2 Walking system piping（SC08HC） 51

Figure 15.3 Steering system piping 52

Figure 15.4 Braking system piping（SC08HC） 53

Figure 15.5 Upper system piping 54

Figure 16 Steering Cylinder 55

Figure 17 Hydraulic oil tank 57

Figure 18.1 Electrical component assembly（SC08HC） 59

Figure 18.2 Electronic control components（SC08EC） 61

Figure 18.3 Electronic control components（SC08HC） 63

Figure 19.1 Charger assembly（SC08HC/SC08EC） 65

Figure 19.2 Charger assembly（SC08HC-Li/SC08EC-Li） 67

Figure 20 Parts of collision protection mechanism（optional） 69

Figure 1.1 Parts and components of chassis

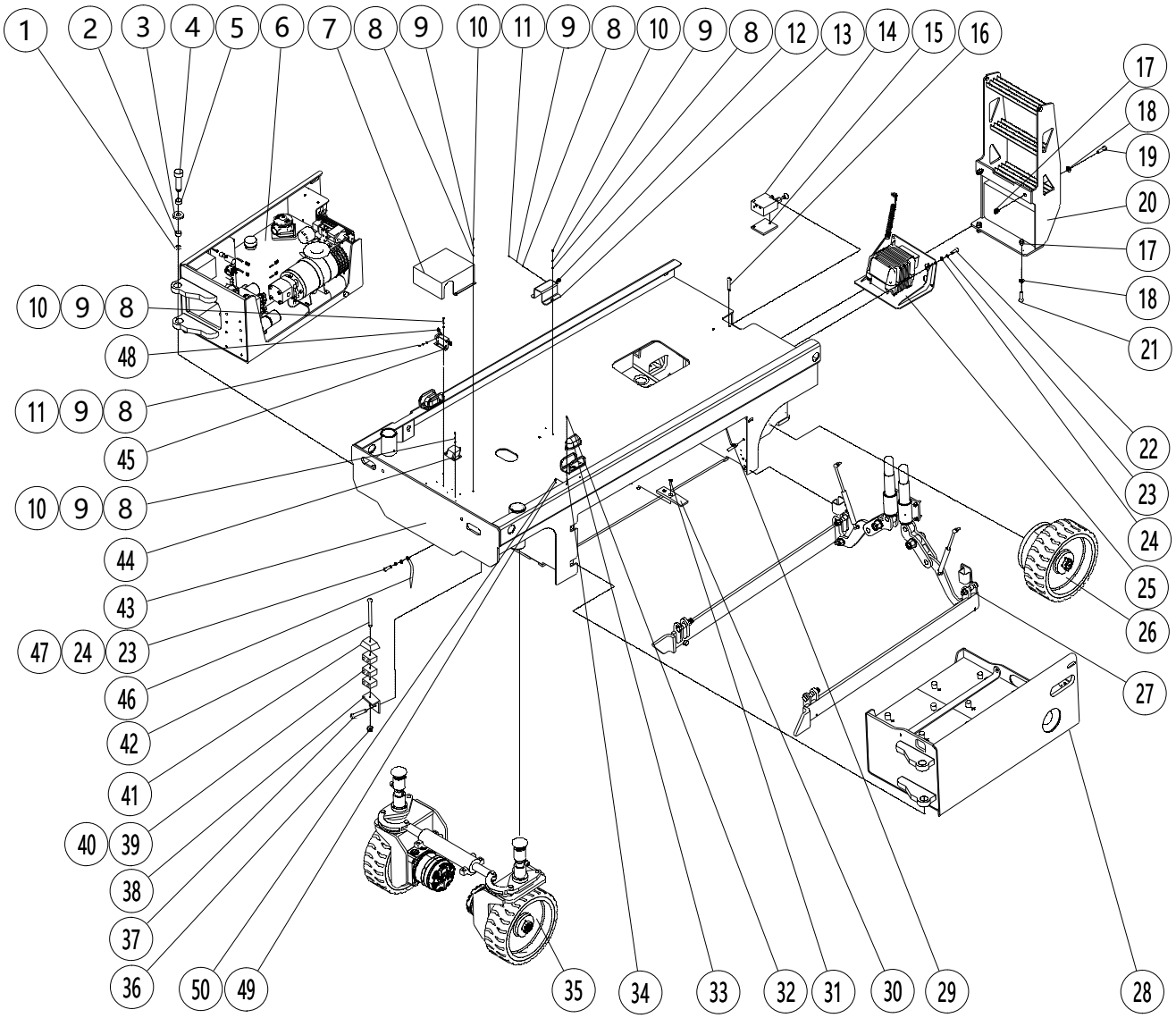

Table 1.1 Parts and components of chassis

NO.	Art No.	Description	Qty.	Note
1	910401300014	Collar	4	
2	940500200023	Composite sleeve	4	
3	940600600001	Washer	4	
4	602021520036	Shaft	4	
5	940500100027	Composite sleeve	4	
6	605510001000	Hydraulic tank	1	Figure 2.1
	606010001000			Figure 2.2
7	602021520069	Fixed box	1	
8	910400100004	Washer	20	
9	910400500004	Spring washer	20	
10	910200200023	Screw	12	
11	910200500038	Screw	8	
12	920200600003	Limit switch	1	
13	602021520043	Limit plate	1	
14	951000500001	Manual pump	1	SC08HC
15	602021520040	Cover plate	1	SC08HC
16	941100200003	Bolt	2	SC08HC
17	910300500007	Nut	4	
18	910400100009	Washer	4	
19	910100300064	Bolt	2	
20	600521510001	Pedal ladder	1	
21	910100300065	Bolt	2	
22	910200200055	Screw	4	
23	910400500006	Spring washer	5	
24	910400100006	Washer	5	
25	605536501000	Charger	1	Figure 19.1
	605536501010		1	Figure 19.2 （Lithium battery only）
26	605598510001	Rear wheel	2	Figure 3.1
	606021501001			Figure 3.2
27	605519501000	Pothole Protection Assembly	1	
28	605521501001	Battery box assembly	1	

29	602021520050	Shaft	2	
30	602021520037	Block	2	
31	910200400025	Screw	4	
32	910200600009	Screw	4	
33	602035510001	Warning light	2	
34	602021510003	Protecting plate	2	
35	605516001000	Steering mechanism	1	Figure 6.1
	606016001000			Figure 6.2
36	910300500004	Nut	1	
37	910200200058	Screw	4	
38	602023520001	Support	1	
39	951000200003	Pipe clamp	2	
40	951000200002	Pipe clamp	1	
41	951000200001	Cover plate	1	
42	941100400004	Screw	1	
43	605521510000	Chassis	1	
44	602533510000	Sensor	1	
45	602021520042	Limit plate	1	
46	602021520074	Anti-static belt	1	
47	910200200053	Screw	1	
48	920200600004	Limit switch	1	
49	910300500001	Nut	4	
50	910400100003	Washer	4	

Figure 2.1 Hydraulic tank assembly（SC08HC）

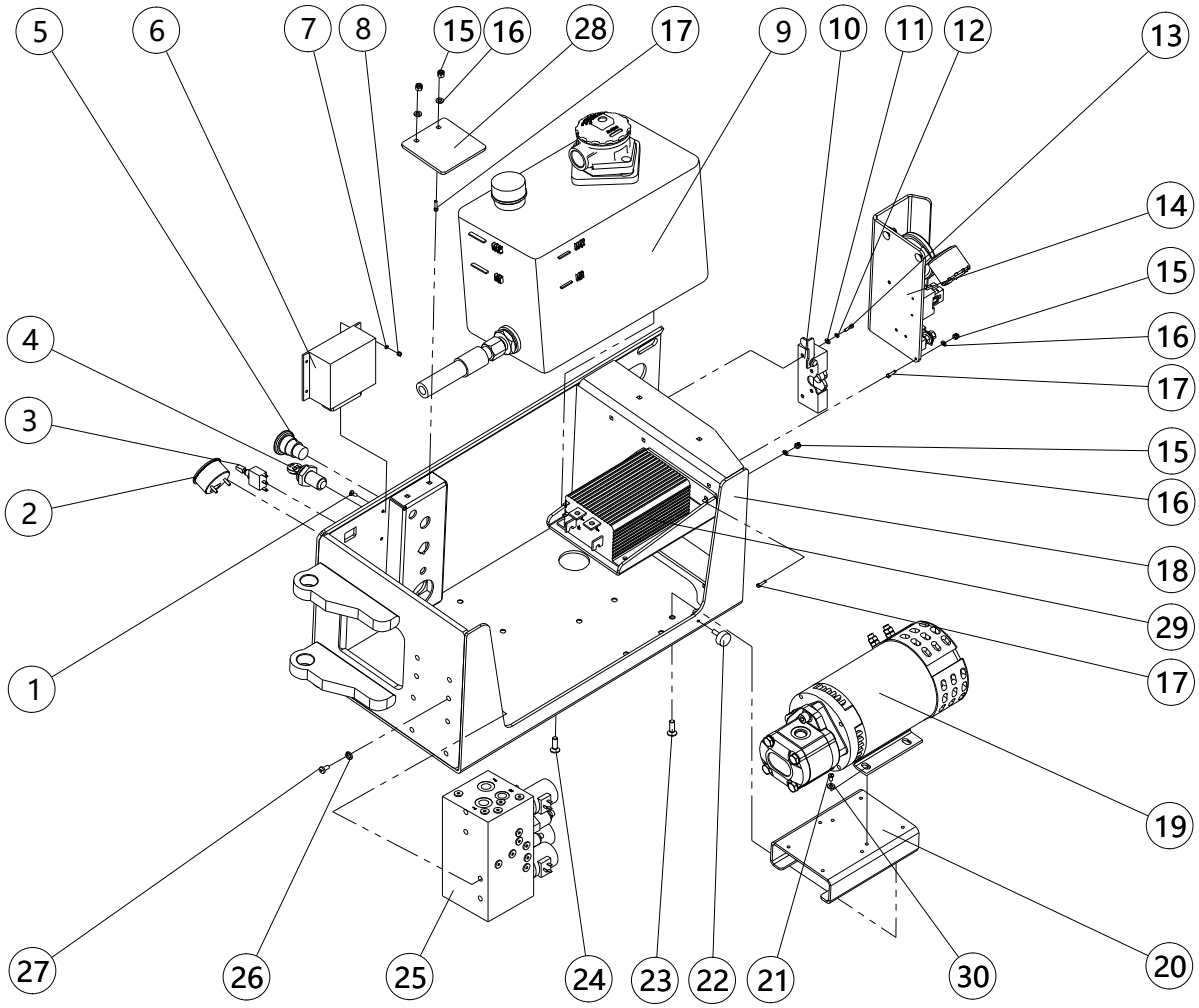

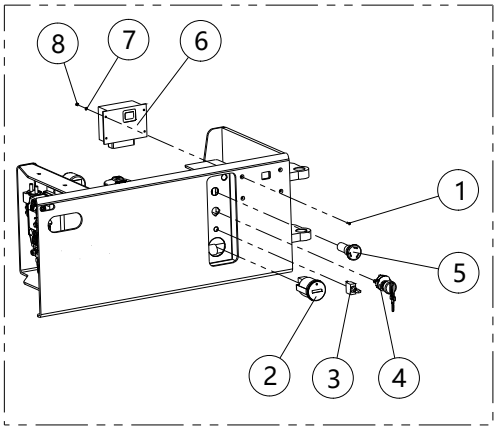

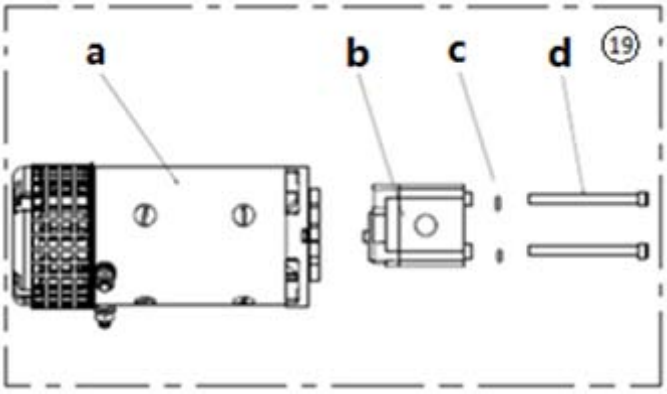

Table 2.1 Hydraulic tank assembly

NO.	Art No.	Description	Qty.	Note
1	910200600008	Screw	4	
2	921100100017	Meter	1	
3	920200700005	Button switch	1	
4	920200200005	Key switch	1	
5	920200100017	Emergency stop switch	1	
6	921400100022	Controller	1	
7	910400100003	Washer	4	
8	910300500001	Nut	4	
9	605523510016	Oil tank	1	
10	940800300001	Lock body of engineering vehicle	1	
11	910400100004	Washer	2	
12	910400500004	Spring washer	2	
13	910100100005	Bolt	2	
14	605533010014	Electrical component assembly	1	Figure18.1
15	910300500003	Nut	7	
16	910400100005	Washer	7	
17	910100900003	Bolt	7	
18	605510010000	Hydraulic tank	1	
19	950900100080	Hydraulic power unit	1	a,b,c,d
20	605510020006	Mounting plate	1	
21	910200300015	Bolt	4	
22	602019520021	Cushion pad	1	
23	910200400025	Screw	4	
24	910200600030	Screw	4	
25	950600100003	Hydraulic valve group	1	Figure10.1
26	910400500006	Spring washer	4	
27	910200300026	Screw	4	
28	605510020011	Protection plate	1	
29	605533010016	Electronic control components	1	Figure18.3
30	910400100006	Washer	4	
a	602098520064	Motor	1	
b	602098520065	Pump	1	
c	602098520062	Washer	2	
d	602098520061	Screw	2	

Figure 2.2 Hydraulic tank assembly（SC08EC）

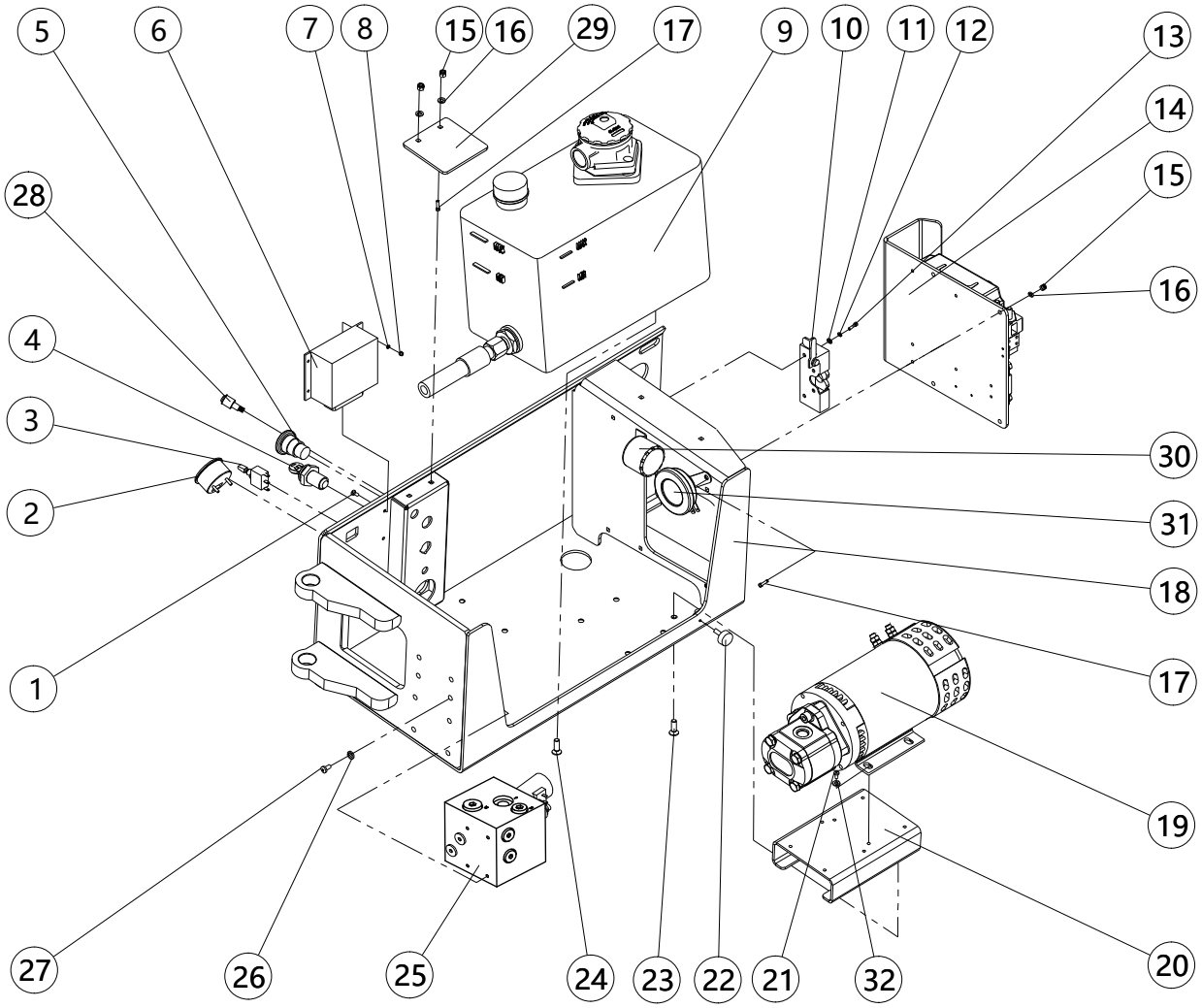

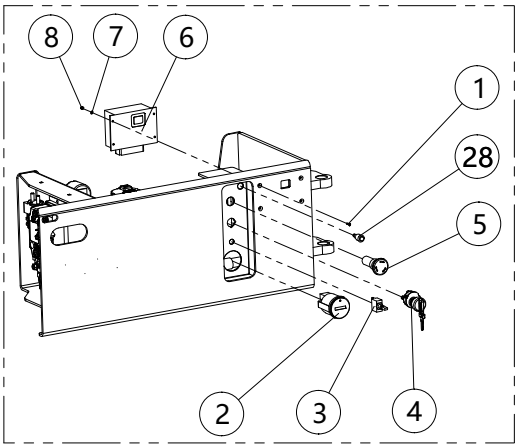

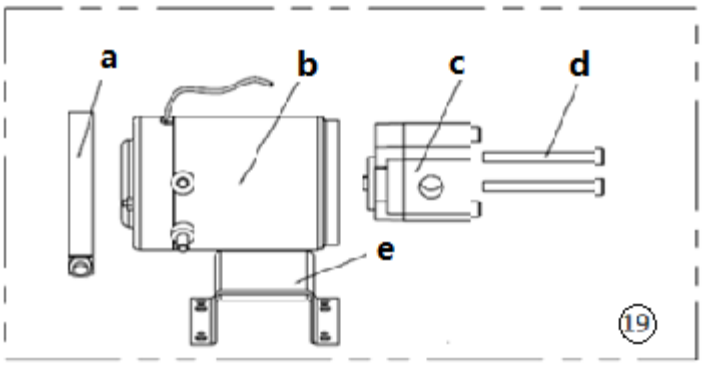

Table 2.2 Hydraulic tank assembly

NO.	Art No.	Description	Qty.	Note
1	910200600008	Screw	4	
2	921100100017	Meter	1	
3	920200700005	Button switch	1	
4	920200200005	Key switch	1	
5	920200100017	Emergency stop switch	1	
6	921400100022	Controller	1	
7	910400100003	Washer	4	
8	910300500001	Nut	4	
9	605523510016	Oil tank	1	
10	940800300001	Lock body of engineering vehicle	1	
11	910400100004	Washer	2	
12	910400500004	Spring washer	2	
13	910100100005	Bolt	2	
14	606033010013	Electronic control components	1	Figure18.2
15	910300500003	Nut	6	
16	910400100005	Washer	6	
17	910100900003	Bolt	6	
18	605510010000	Hydraulic tank	1	
19	950900100034	Hydraulic power unit	1	a,b,c,d,e
20	605510020006	Mounting plate	1	
21	941100200014	Bolt	4	
22	602019520021	Cushion pad	1	
23	910200400025	Screw	4	
24	910200600030	Screw	4	
25	950600100009	Hydraulic valve group	1	Figure10.2
26	910400500007	Spring washer	4	
27	910200300026	Screw	4	
28	920200700042	Button switch	1	
29	605510020011	Protection plate	1	
30	920500100002	Horn buzzer	1	
31	920500100001	Horn	1	
32	910400100006	Washer	4	
a	605598520006	Clamp	1	
b	605598520007	Motor	1	
c	605598520005	Pump	1	
d	605598520008	Screw	2	
e	605598520009	Support	1	

Figure 3.1 Rear wheel（SC08HC）

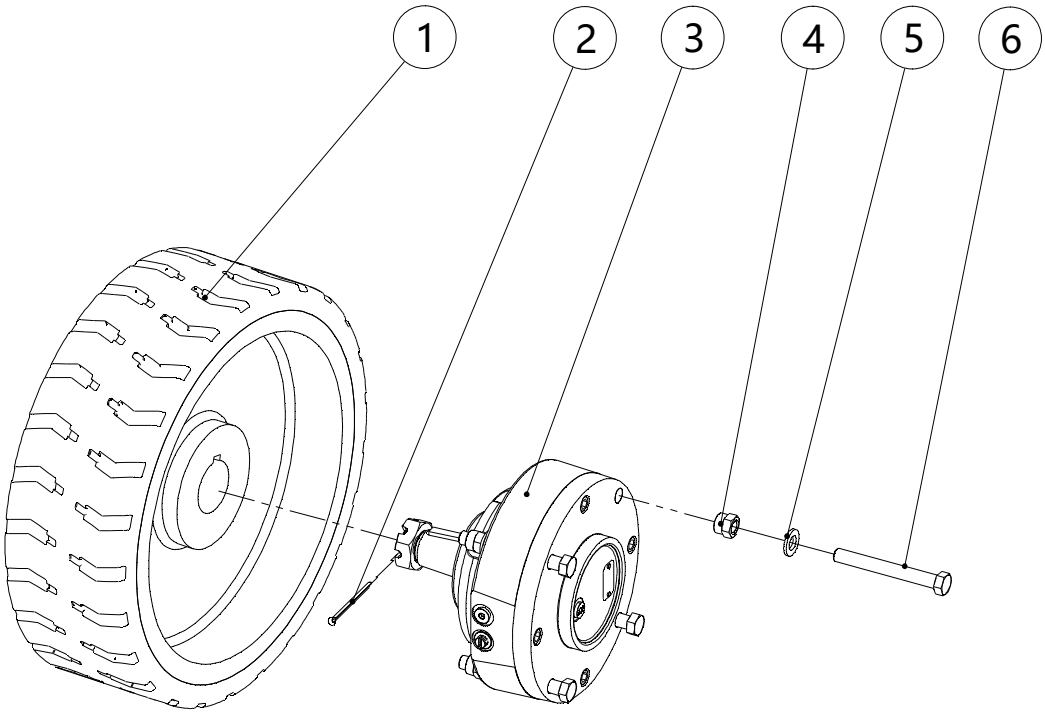

Table 3.1 Rear wheel

NO.	Art No.	Description	Qty.	Note
1	940300400008	Driving wheel	1	
2	910600600045	Pin	1	
3	940700200001	Brake	1	
4	910300500006	Nut	4	
5	910400100008	Washer	4	
6	941100200004	Bolt	4	

Figure 3.2 Rear wheel（SC08EC）

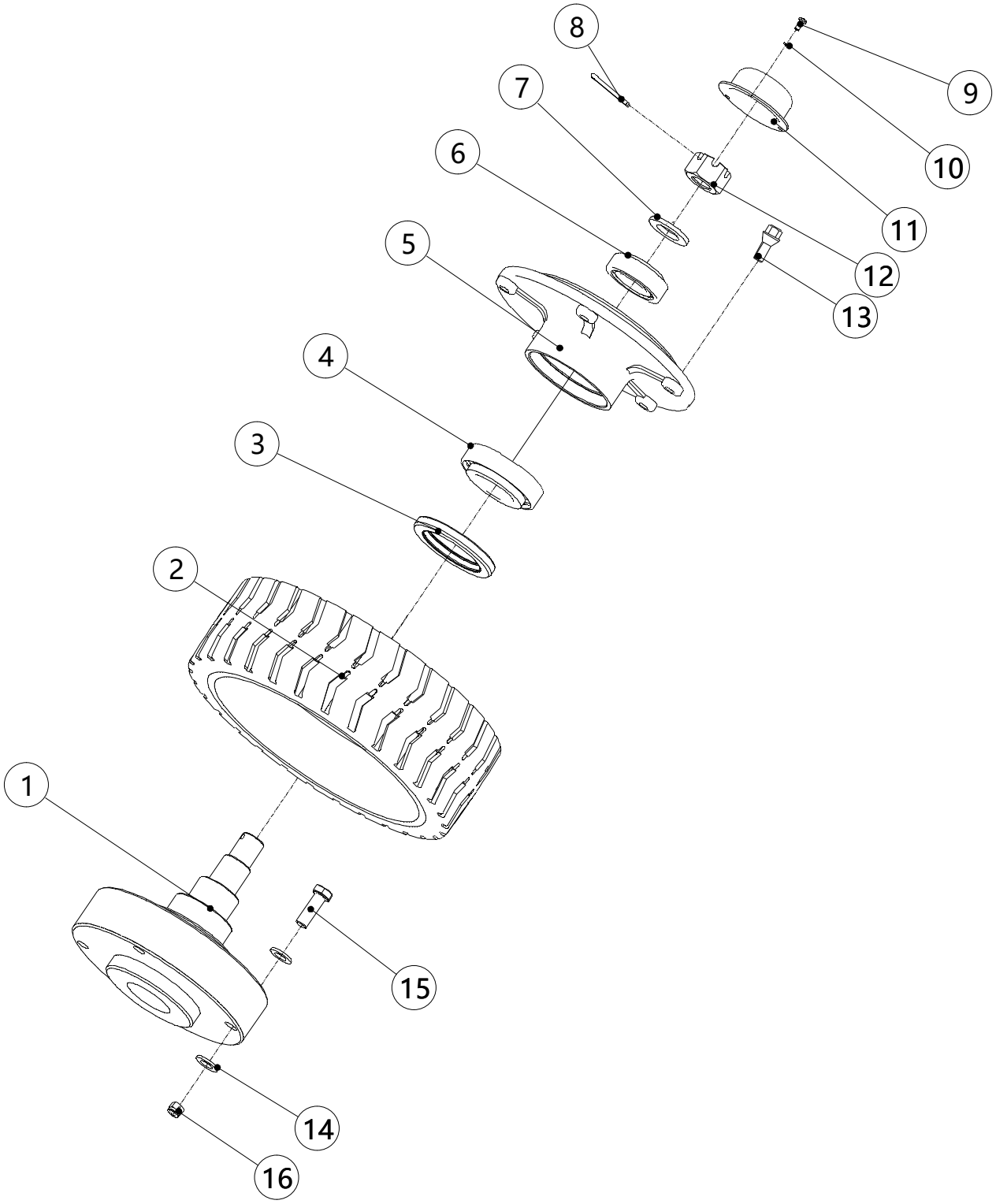

Table 3.2 Rear wheel

NO.	Art No.	Description	Qty.	Note
1	606021510000	Shaft seat	1	
2	940300400009	Driving wheel	1	
3	910800700003	Skeleton oil seal	1	
4	910700600029	Bearing	1	
5	606021520000	Wheel hub connecting	1	
6	910700600026	Bearing	1	
7	910400100014	Washer	1	
8	910600600045	Pin	1	
9	910200500021	Screw	3	
10	910400500003	Spring washer	3	
11	604521520004	Dust cover	1	
12	910301600001	Nut	1	
13	606016020010	Bolt	5	
14	910400100008	Washer	8	
15	941100400005	Bolt	4	
16	910300500006	Nut	4	

Figure 4 Pothole protection mechanism

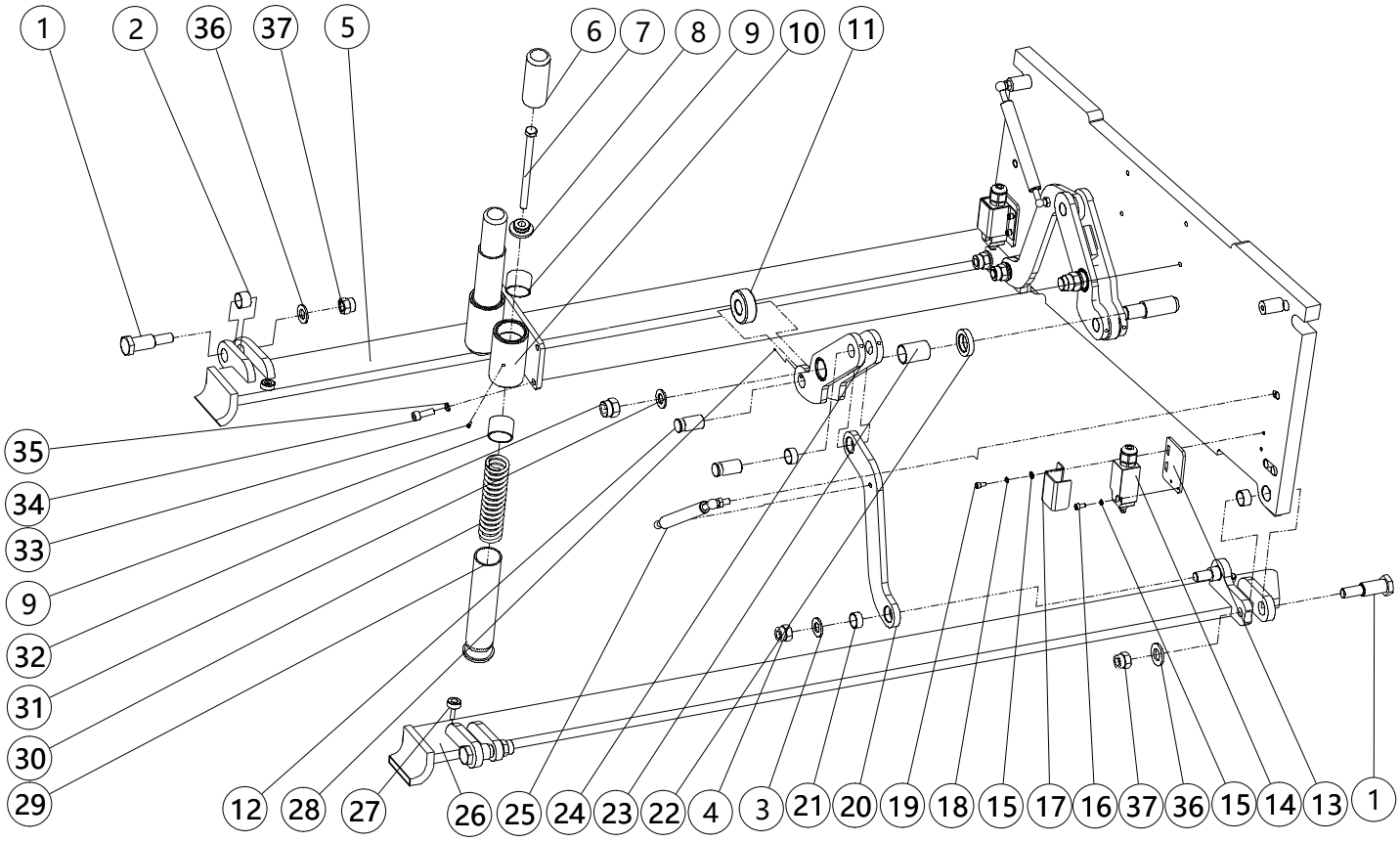

Table 4 Pothole protection mechanism

NO.	Art No.	Description	Qty.	Note
1	605519520008	Shaft	4	
2	940500100006	Composite sleeve	4	
3	910400100009	Washer	2	
4	910300500007	Nut	2	
5	605519510004	Support plate	1	
6	602019520018	Shaft	2	
7	941100400003	Screw	2	
8	602019520029	Gland	2	
9	940500100040	Composite sleeve	4	
10	600519510002	Guide sleeve	2	
11	602019520009	Roller	2	
12	602019520011	Pin Shaft	4	
13	602019520022	Plate	2	
14	920200600005	Limit switch	2	
15	910400100004	Washer	8	
16	910200200027	Screw	4	
17	602019520020	Protection cover	2	
18	910400500004	Spring washer	4	
19	910200300012	Screw	4	
20	605519520001	Connecting rod	2	
21	940500100014	Composite sleeve	4	
22	602019520005	Washer	2	
23	940500100056	Composite sleeve	2	
24	600519510001	Connecting rod	2	
25	940400100034	Air spring	2	
26	605519510000	Support plate	1	
27	602019520021	Cushion pad	2	
28	910200900009	Screw	4	
29	602019520030	Press rod sleeve	2	
30	602019520028	Spring	2	
31	910400100012	Washer	2	
32	910300500010	Nut	2	
33	911200100002	Oil cup	2	
34	910200200058	Screw	4	
35	910400500006	Spring washer	4	
36	910400100008	Washer	4	
37	910300500006	Nut	4	

Figure 5.1 Battery box assembly（SC08HC/ SC08EC）

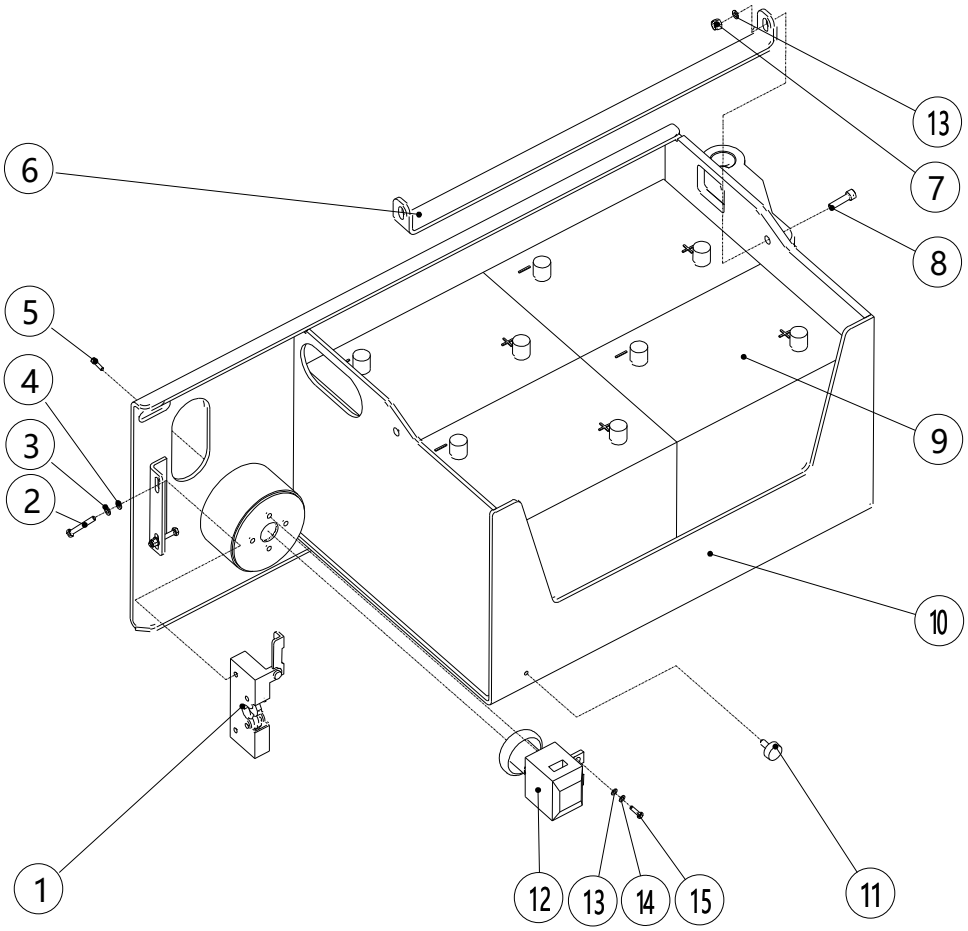

Table 5.1 Battery box assembly（SC08HC/ SC08EC）

NO.	Art No.	Description	Qty.	Note
1	940800300007	Lock body of engineering vehicle	1	
2	910100100005	Bolt	2	
3	910400500004	Spring washer	2	
4	910400100004	Washer	2	
5	910200300012	Screw	2	
6	605521520015	Plate	1	
7	910300500004	Nut	2	
8	910200200058	Screw	2	
9	920600100087	Battery	4	
10	605521510001	Battery box	1	
11	602019520021	Cushion pad	1	
12	920200100004	Emergency stop switch	1	
13	910400100006	Washer	4	
14	910400500006	Spring washer	2	
15	910200200055	Screw	2	

Figure 5.2 Battery box assembly（SC08HC-Li/ SC08EC-Li）

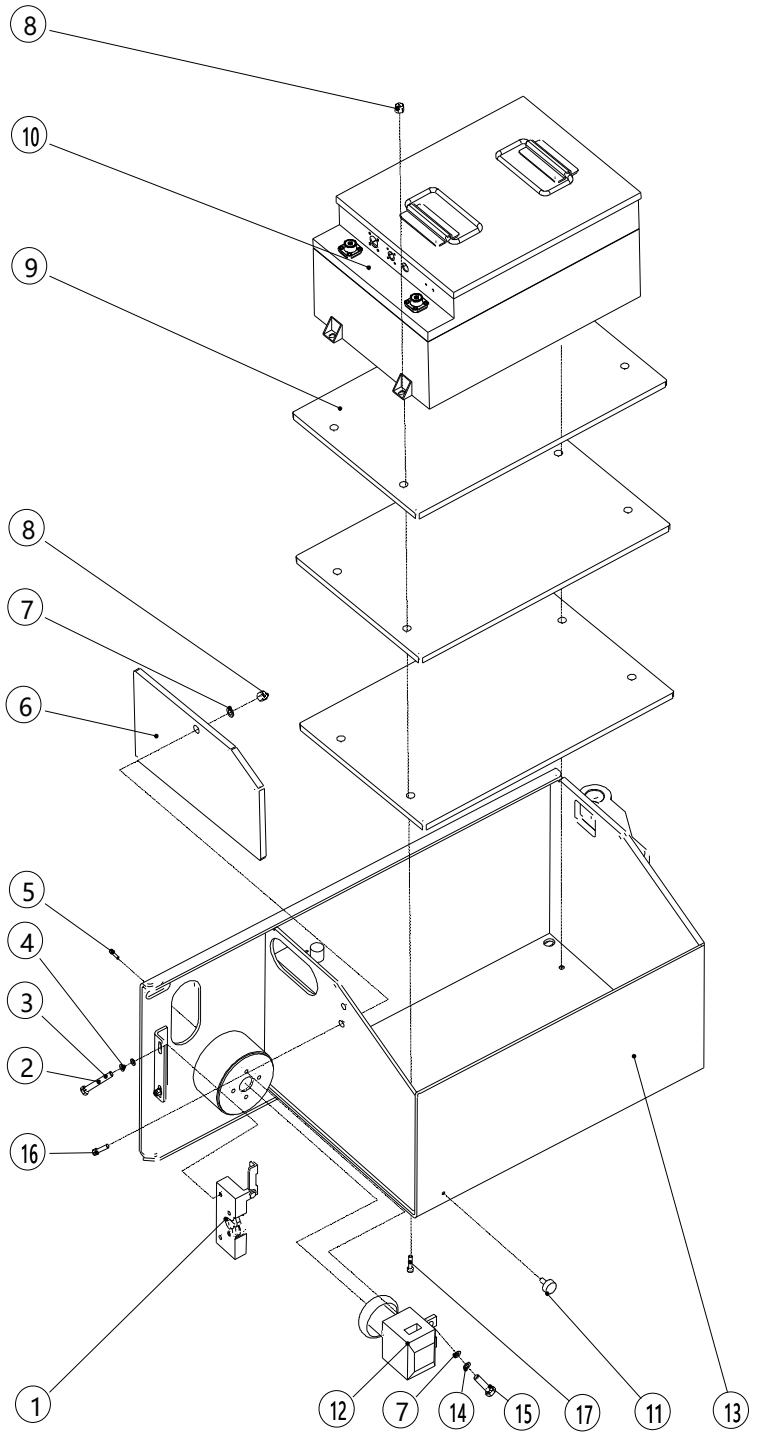

Table 5.2 Battery box assembly（SC08HC-Li/ SC08EC-Li）

NO.	Art No.	Description	Qty.	Note
1	940800300007	Lock body of engineering vehicle	1	
2	910100100005	Bolt	2	
3	910400500004	Spring washer	2	
4	910400100004	Washer	2	
5	910200300012	Screw	2	
6	605521520031	Weight 1	1	
7	910400100006	Washer	2	
8	910300500004	Nut	4	
9	605521520032	Weight 2	3	
10	920600100202	Battery	1	No heating system, with GPRS
	920600100205			With heating system, with GPRS
11	602019520021	Cushion pad	1	
12	920200100004	Emergency stop switch	1	
13	605521510001	Battery box	1	
14	910400500006	Spring washer	2	
15	910200200055	Screw	2	
16	910200200059	Screw	1	
17	910200400029	Screw	3	

Figure 6.1 Steering mechanism（SC08HC）

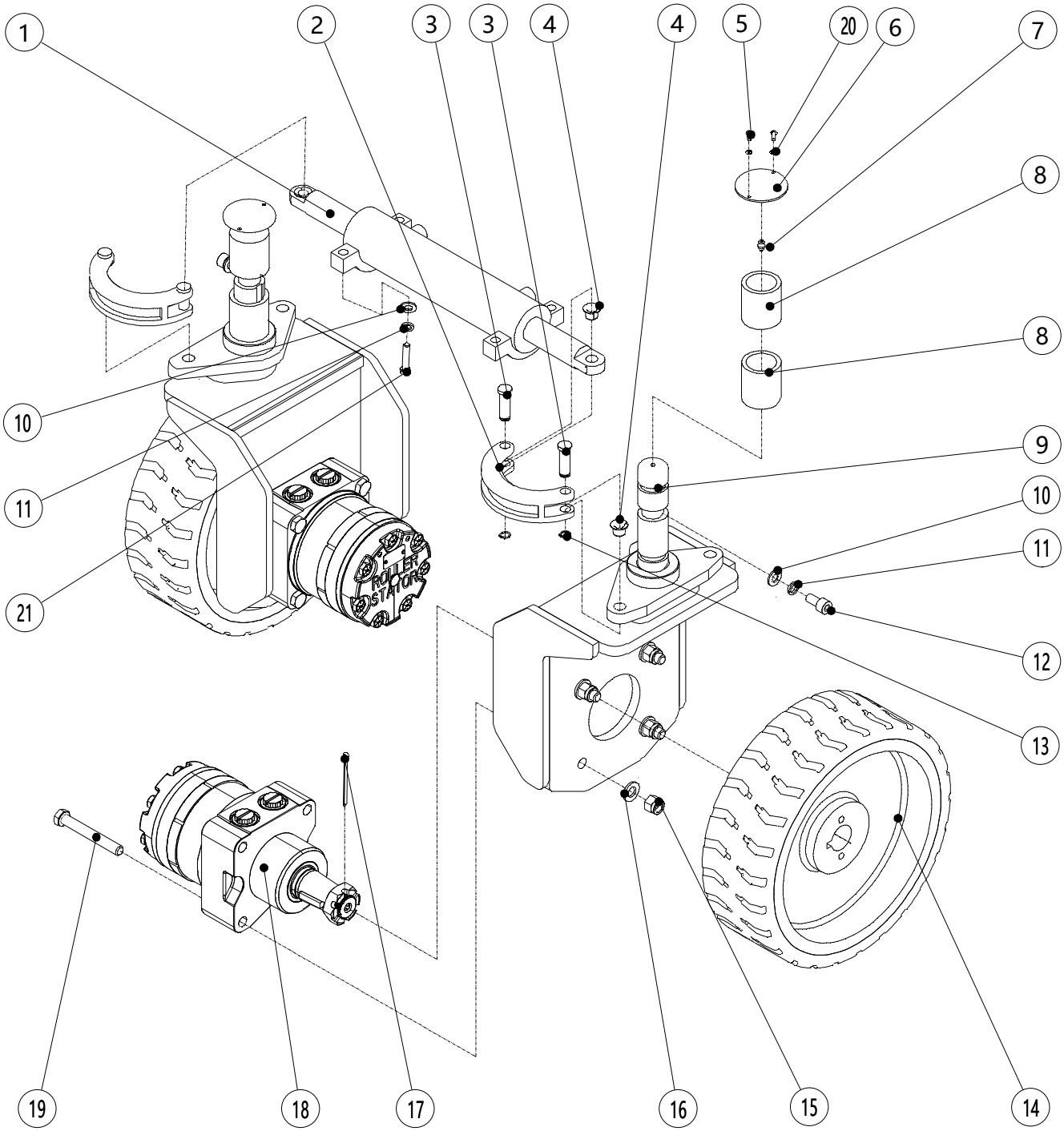

Table 6.1 Steering mechanism

NO.	Art No.	Description	Qty.	Note
1	605523510021	Cylinder	1	
2	605516020008	Connecting rod	2	
3	605516020009	Shaft	4	
4	940500200021	Composite sleeve	4	
5	910200300008	Screw	4	
6	605516020001	End cover	2	
7	911200100002	Oil cup	2	
8	940500300004	Bearing	4	
9	605516010000	Wheel carrier	2	
10	910400100007	Washer	6	
11	910400500007	Spring washer	6	
12	910200200075	Screw	2	
13	910401300002	Collar	4	
14	940300400008	Driving wheel	2	
15	910300500006	Nut	8	
16	910400100008	Washer	8	
17	910600600045	Pin	2	
18	950800100001	Brake	2	
19	941100400005	Screw	8	
20	910400500003	Washer	4	
21	910100300039	Bolt	4	

Figure 6.2 Steering mechanism（SC08EC）

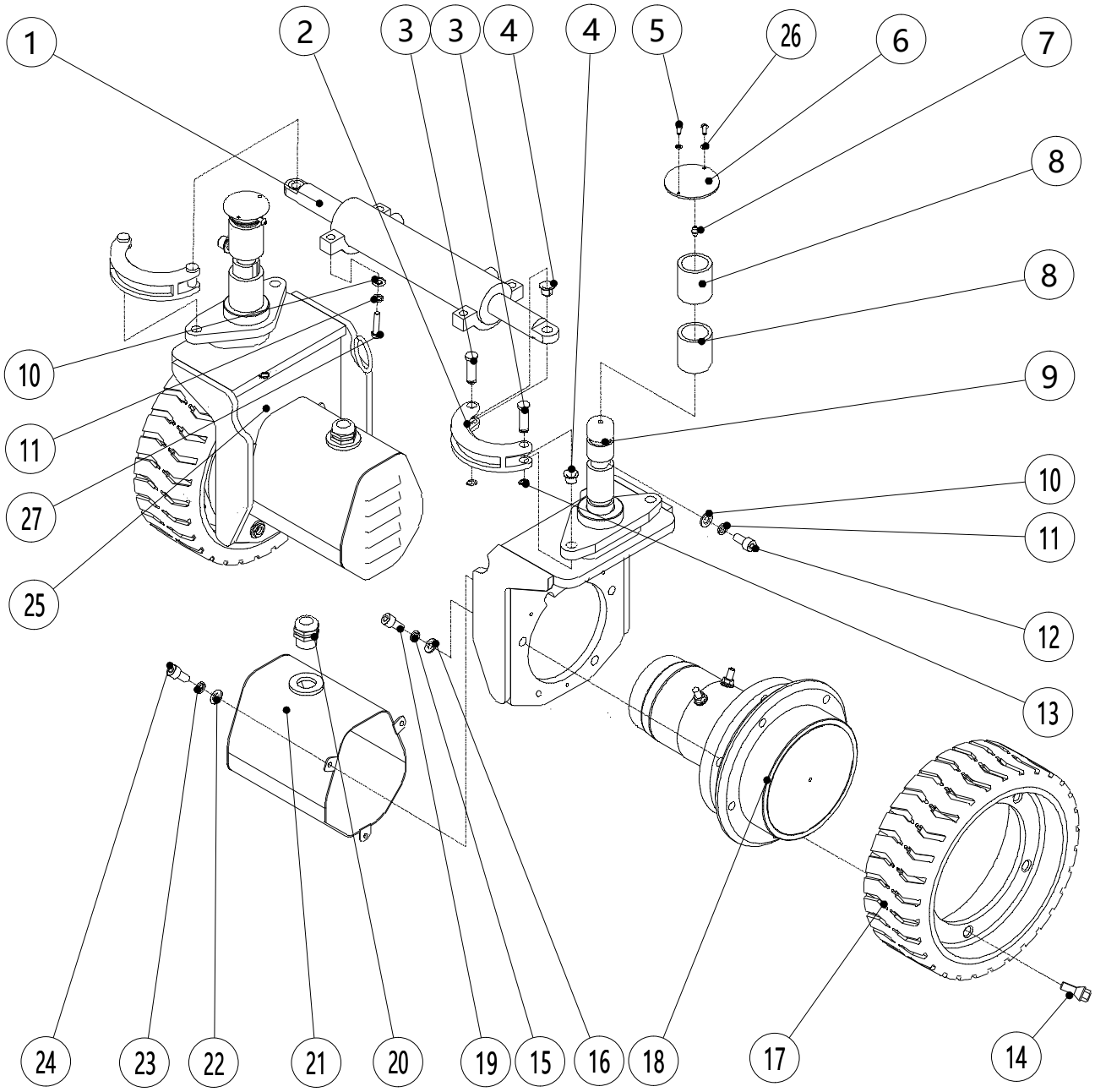

Table 6.2 Steering mechanism

NO.	Art No.	Description	Qty.	Note
1	605523510021	Cylinder	1	
2	605516020008	Connecting rod	2	
3	605516020009	Shaft	4	
4	940500200021	Composite sleeve	4	
5	910200300008	Screw	4	
6	605516020001	End cover	2	
7	911200100002	Oil cup	2	
8	940500300004	Bearing	4	
9	606016010001	Wheel carrier	1	
10	910400100007	Washer	6	
11	910400500007	Spring washer	6	
12	910200200075	Screw	2	
13	910401300002	Collar	4	
14	606016020010	Bolt	10	
15	910300500006	Nut	10	
16	910400100008	Washer	10	
17	940300400009	Driving wheel	2	
18	940900100045	Drive assembly	2	
19	910100300052	Bolt	10	
20	921300100004	Cable tightening parts	2	
21	606016010002	Cover	2	
22	910400100005	Washer	6	
23	910400500005	Spring washer	6	
24	910200200035	Screw	6	
25	606016010000	Wheel carrier	1	
26	910400500003	Spring washer	4	
27	910100300039	Bolt	4	

Figure 7 Parts and components of scissors

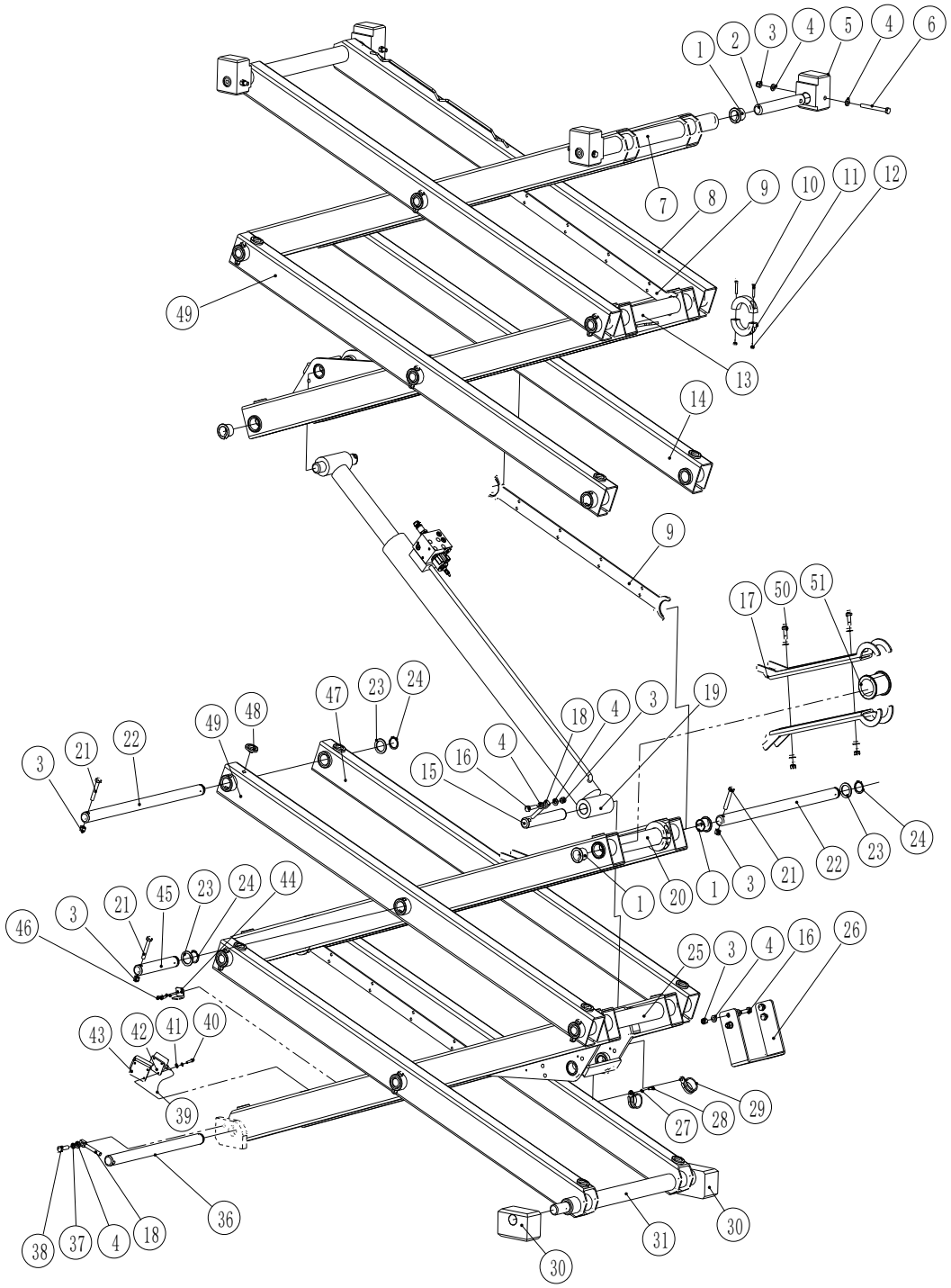

Table 7 Parts and components of scissors

NO.	Art No.	Description	Qty.	Note
1	940500200025	Sleeve	28	
2	605553020013	Shaft	4	
3	910300500005	Bolt	23	
4	910400100007	Washer	21	
5	605553020020	Slider	4	
6	910100100042	Bolt	4	
7	605553010004	Scissors	1	
8	605553010009	Scissors	1	
9	605553020018	Fixed Plate	3	
10	910200300021	Screw	12	
11	605553020028	Clamp	12	
12	910300100005	Bolt	12	
13	605553010003	Scissors	1	
14	605553010008	Scissors	1	
15	605553020017	Shaft	2	
16	910100300039	Bolt	6	
17	605553020031	Support arm	2	
18	602053020041	Shaft	3	
19	605523510020	Cylinder	1	
20	605553010002	Scissors	1	
21	910100100036	Bolt	11	
22	605553020014	Shaft	9	
23	605553020030	Washer	11	
24	910401600003	Collar	11	
25	605553010001	Scissors	1	
26	605553020025	Plate	1	
27	910400500004	Spring washer	8	

28	910200200023	Screw	2	
29	951000100007	Pipe clamp	2	
30	605553020019	Slider	2	
31	605553010005	Scissors	1	
36	605553020016	Shaft	1	
37	910400500007	Spring washer	1	
38	910100300038	Bolt	1	
39	605566010001	Wiring harness	1	
40	910200200022	Screw	4	
41	910400100004	Washer	4	
42	602066010000	Sensor	1	
43	602053020031	Fixed Plate	1	
44	602053020032	Plate	1	
45	605553020015	Shaft	2	
46	910200200021	Screw	2	
47	605553010007	Scissors	1	
48	602053020038	Cushion pad	24	
49	605553010006	Scissors	2	
50	910100300037	Bolt	2	
51	605553020029	Bearing bush	2	

Figure 8 Extended platform assembly

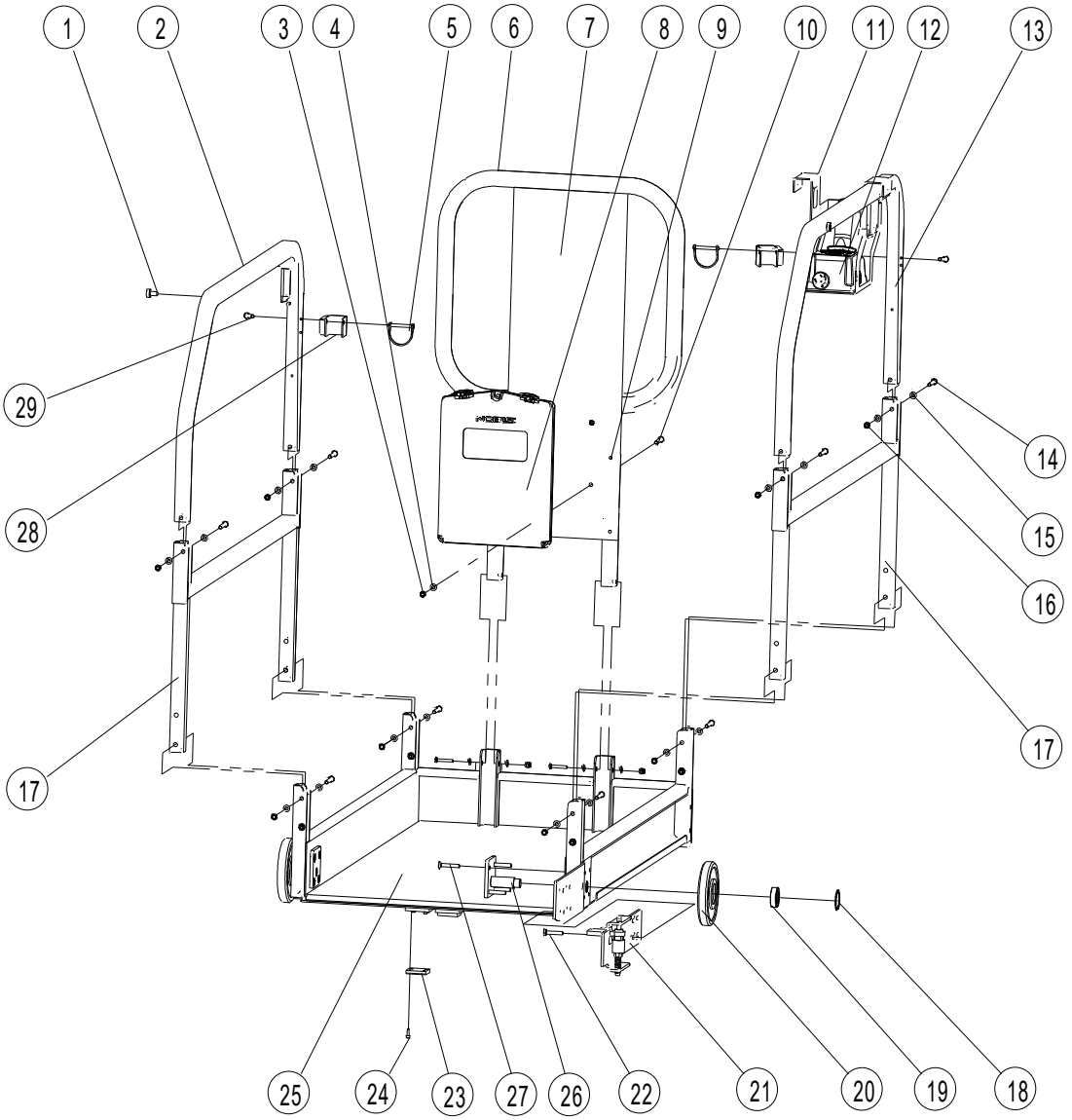

Table 8 Extended platform assembly

NO.	Art No.	Description	Qty.	Note
1	602019520021	Cushion pad	2	
2	605553510003	Rail	1	
3	910400100005	Washer	3	
4	910300500003	Nut	3	
5	602053501003	Steel wire sleeve	2	
6	605553510005	Rail	1	
7	600553520042	Hanging Plate	1	
8	610053520093	File box	1	
9	910500200003	Rivet	6	
10	910200500052	Screw	3	
11	602011010000	Hanging Plate	1	
12	922100100004	Controller	1	
13	605553510004	Rail	1	
14	910100100026	Bolt	14	
15	910400100006	Washer	28	
16	910300500004	Nut	14	
17	605553510006	Rail	2	
18	910401400013	Collar	2	
19	910700200019	Bearing	2	
20	602053520073	Roller	2	
21	600553501001	Pedal lock	1	Figure12
22	910200300024	Screw	4	
23	602053520066	Steeping	2	
24	910200200032	Screw	8	
25	605553510010	Platform	1	
26	602053510009	Mounting seat	2	
27	910200400031	Screw	8	
28	600553510012	Hanging buckle	2	
29	910200300034	Screw	4	

Figure 9 Main platform assembly

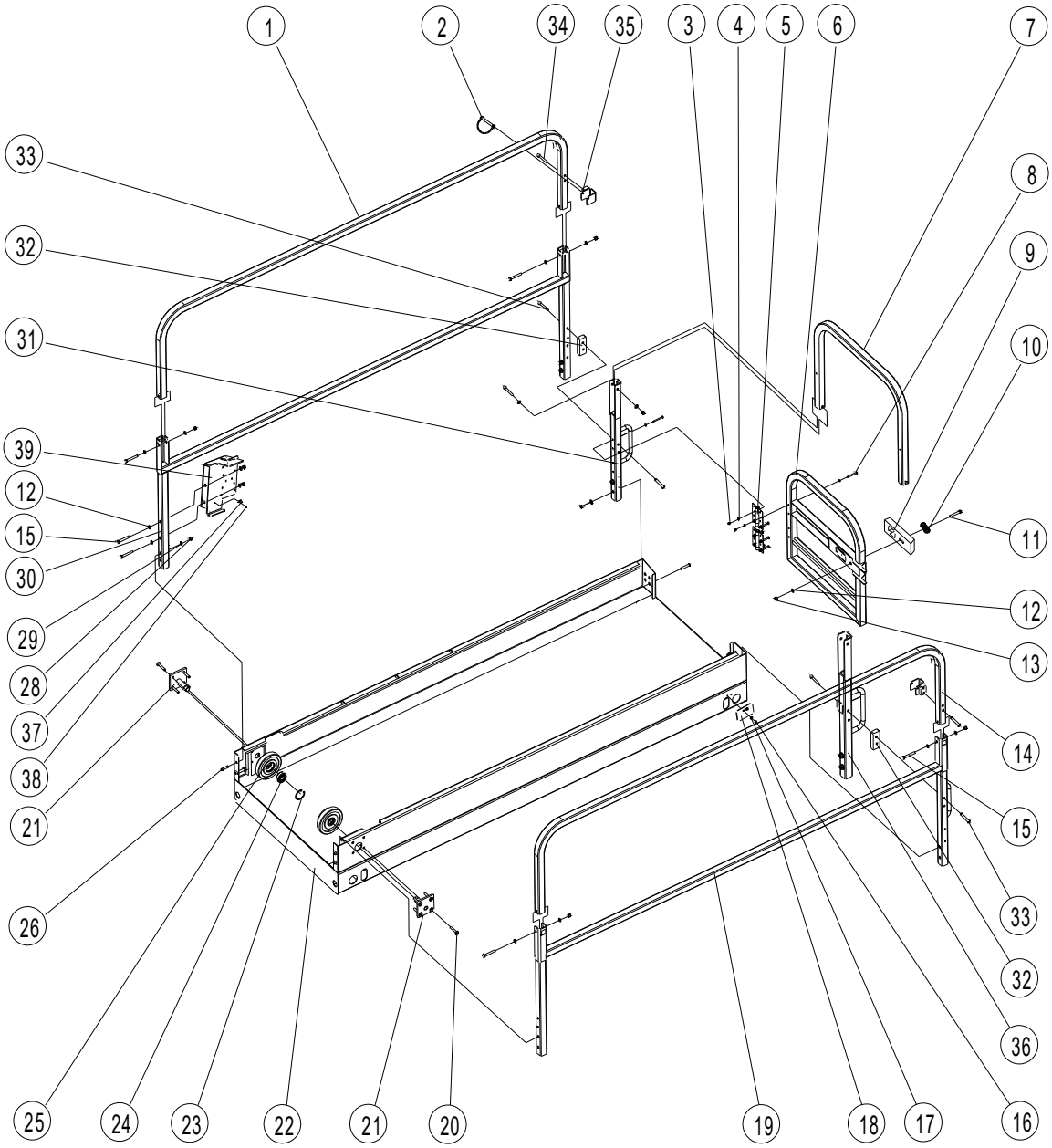

Table 9 Main platform assembly

NO.	Art No.	Description	Qty.	Note
1	605553520027	Guardrail	1	
2	602053501003	Steel wire sleeve	2	
3	910300500002	Nut	8	
4	910400100004	Washer	8	
5	602053520090	Hinge 1	1	
	602053520091	Hinge 2	1	
6	605553510009	Doorframe	1	
7	605553520025	Doorframe square pipe	1	
8	910100100007	Bolt	8	
9	602053520036	Door lock	1	
10	602053520037	Spring	1	
11	910100100025	Bolt	1	
12	910400100006	Washer	18	
13	910300500004	Nut	9	
14	605553520026	Guardrail	1	
15	910100100026	Bolt	8	
16	910200300016	Screw	4	
17	910400100005	Washer	4	
18	602053520085	Plate	2	
19	605553510008	Rail	1	
20	910200400031	Screw	8	
21	602053510009	Mounting seat	2	
22	605553510001	Main platform	1	
23	910401400013	Collar	2	
24	910700200019	Bearing	2	
25	602053520072	Roller	2	
26	941100100002	Screw	12	

28	910400100007	Washer	12	
29	910300500005	Nut	12	
30	605553510007	Guardrail	1	
31	600553510010	Doorframe column	1	
32	600553520044	Connection block	2	
33	910200300032	Screw	8	
34	910200300034	Screw	4	
35	600553510012	Hanging buckle	2	
36	605553510011	Doorframe column	1	
37	921300200001	Fixed Part	1	
38	910200500036	Screw	1	
39	602053520071	Plate	1	

Figure 10.1　Main control valve block（SC08HC）

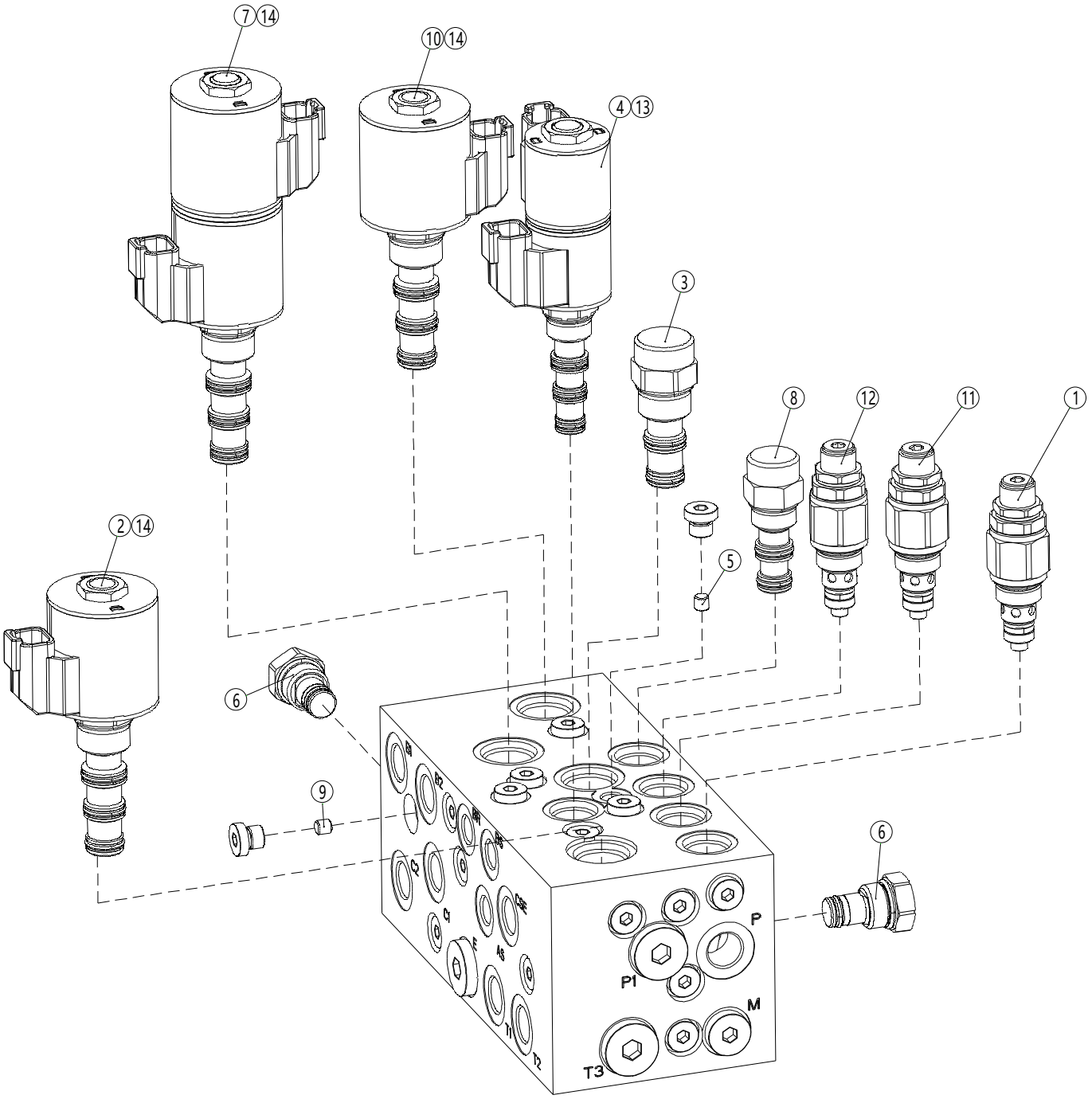

Table 10.1 Main control valve block

NO.	Art No.	Description	Qty.	Note
1	602098520005	Overflow valve	1	
2	602098520006	Solenoid valve	1	
3	602098520007	Priority valve	1	
4	602098520008	Solenoid valve	1	
5	602098520027	Damping	1	
6	602098520009	One-way valve	2	
7	602098520010	Solenoid valve	1	
8	602098520011	Compensating valve	1	
9	602098520012	Damping	1	
10	602098520013	Solenoid valve	1	
11	602098520014	Overflow valve	1	
12	602098520015	Overflow valve	1	
13	602098520016	Coil	2	
14	602098520017	Coil	4	

Figure 10.2 Main control valve block（SC08EC）

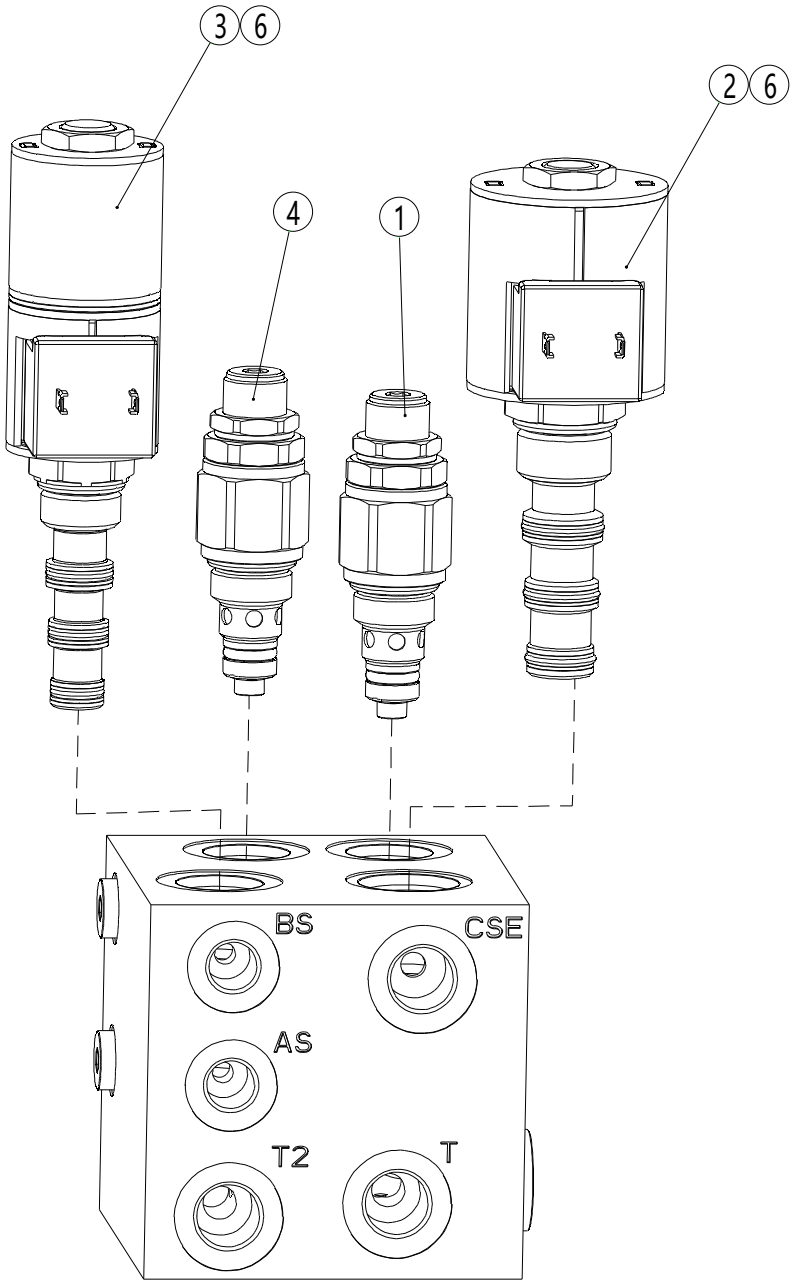

Table 10.2 Main control valve block

NO.	Art No.	Description	Qty.	Note
1	602098520005	Overflow valve	1	
2	602098520006	Solenoid valve	1	
3	602098520008	Solenoid valve	1	
4	602098520015	Overflow valve	1	
5	602098520018	Coil	2	
6	602098520019	Coil	1	

Figure 11 Platform controller components

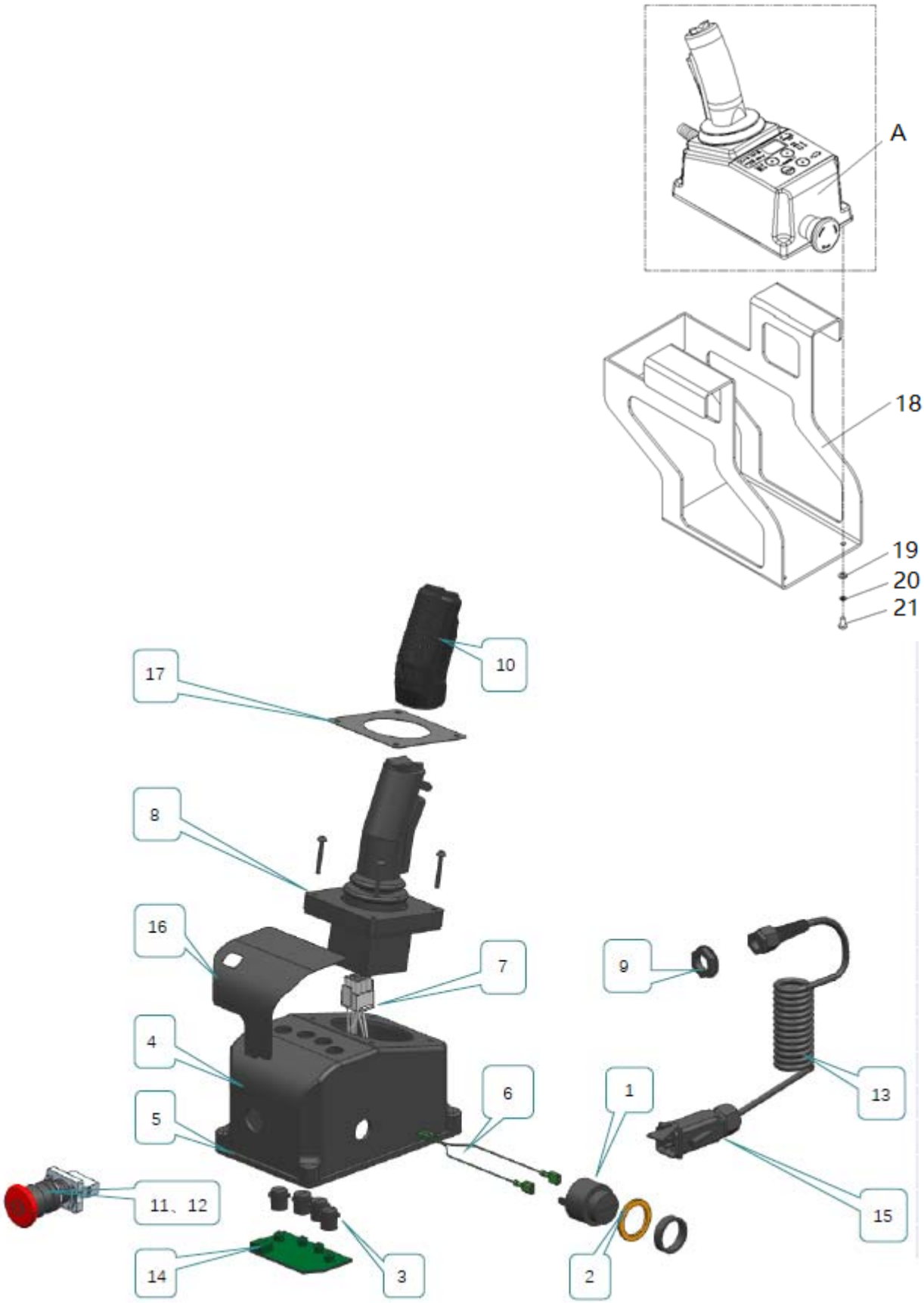

Table 11 Platform controller components

NO.	Art No.	Description	Qty.	Note
1	602098520035	Buzzer	1	
2	602098520068	Washer	1	
3	602098520037	Button	4	
4	602098520040	Controller box	1	
5	602098520041	Bottom cover	1	
6	602098520069	Harness	1	
7	602098520070	Harness	1	
8	602098520032	Control handle	1	
9	602098520071	Nut	1	
10	602098520067	Silicon rubber case	1	
11	602098520034	Emergency stop switch	1	
12	602098520038	Contact block	1	
13	602098520039	Spring line	1	
14	602098520036	Switch	1	
15	602098520072	Connector	1	
16	602098520033	Decal	1	
17	602098520073	Decal	1	
18	602011010000	Hanging plate	1	
19	910400100005	Washer	4	
20	910400500005	Spring washer	4	
21	910200500054	Screw	4	
A	922100100004	Platform controller	1	

Figure 12 Pedal lock

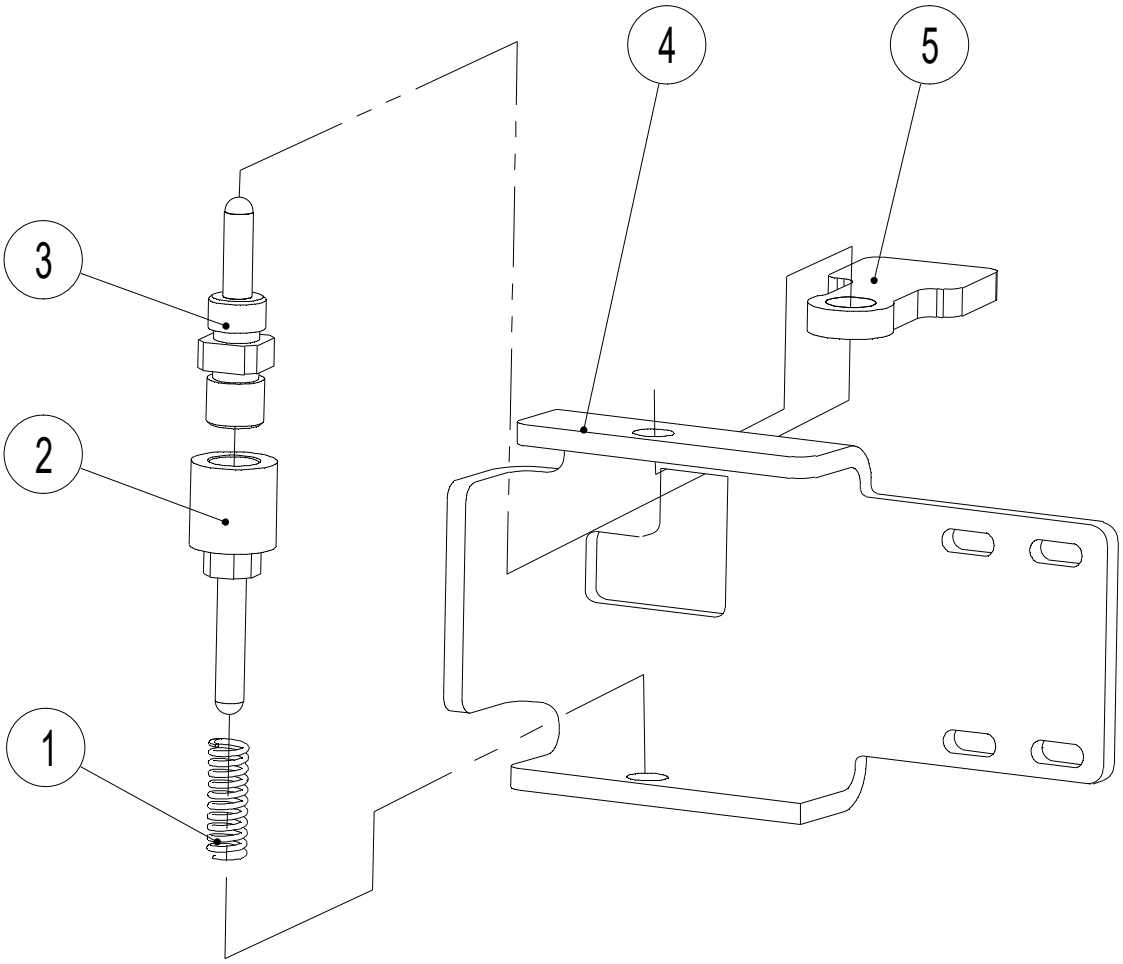

Table 12 Pedal lock

NO.	Art No.	Description	Qty.	Note
1	602053520078	Spring	1	
2	600553520040	Shaft	1	
3	600553520039	Shaft	1	
4	600553520037	Plate	1	
5	600553520038	Plate	1	

Figure 13.1 Wiring harness（SC08HC）

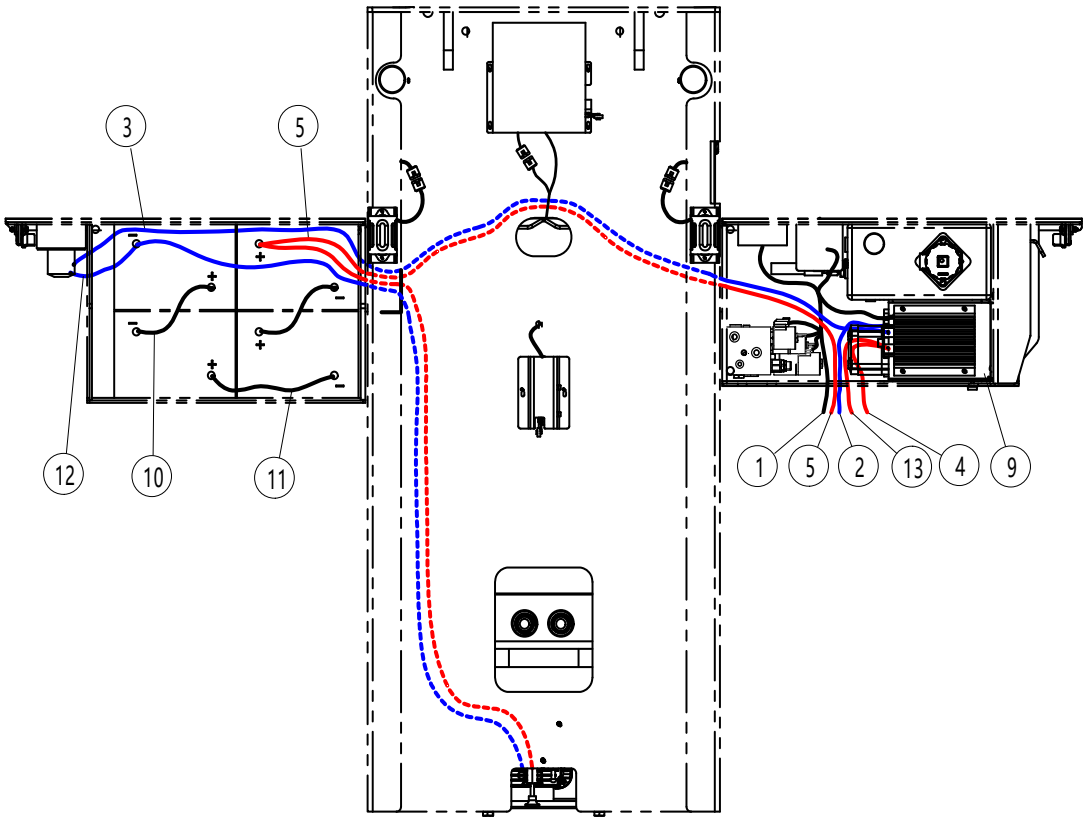

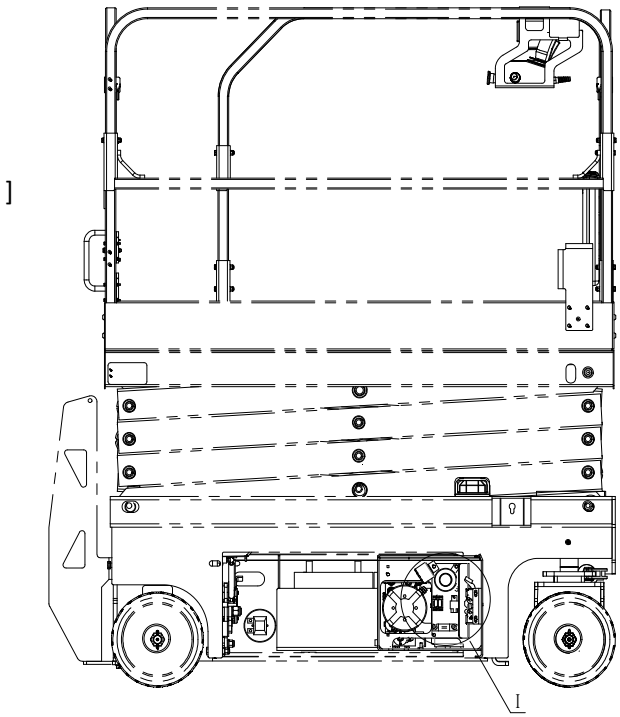

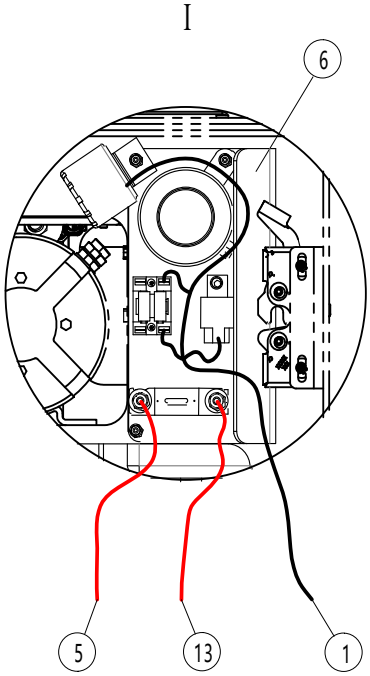

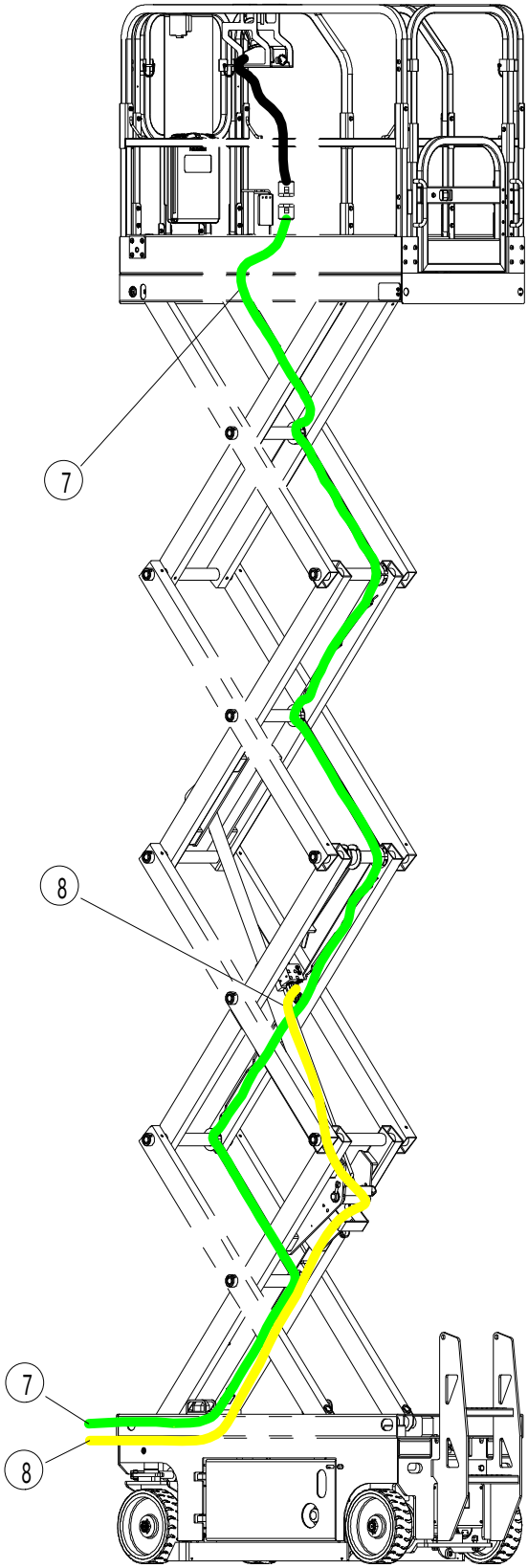
7
8
7
8

Table 13.1 Wiring harness(SC08HC)

NO.	Art No.	Description	Qty.	Note
1	605533010015	Wiring harness	1	
2	605533010010	Cable	1	
3	605533010006	Cable	1	
4	605533010009	Cable	1	
5	605533010005	Cable	1	
6	605533010014	Electrical component assembly	1	
7	605533010001	Wiring harness	1	
8	605533010002	Wiring harness	1	
9	605533010013	Electronic components	1	
10	605533010011	Wiring harness	2	
11	605533010012	Cable	1	
12	605533010003	Cable	1	
13	605533010017	Cable	1	

Figure 13.2 Wiring harness（SC08EC）

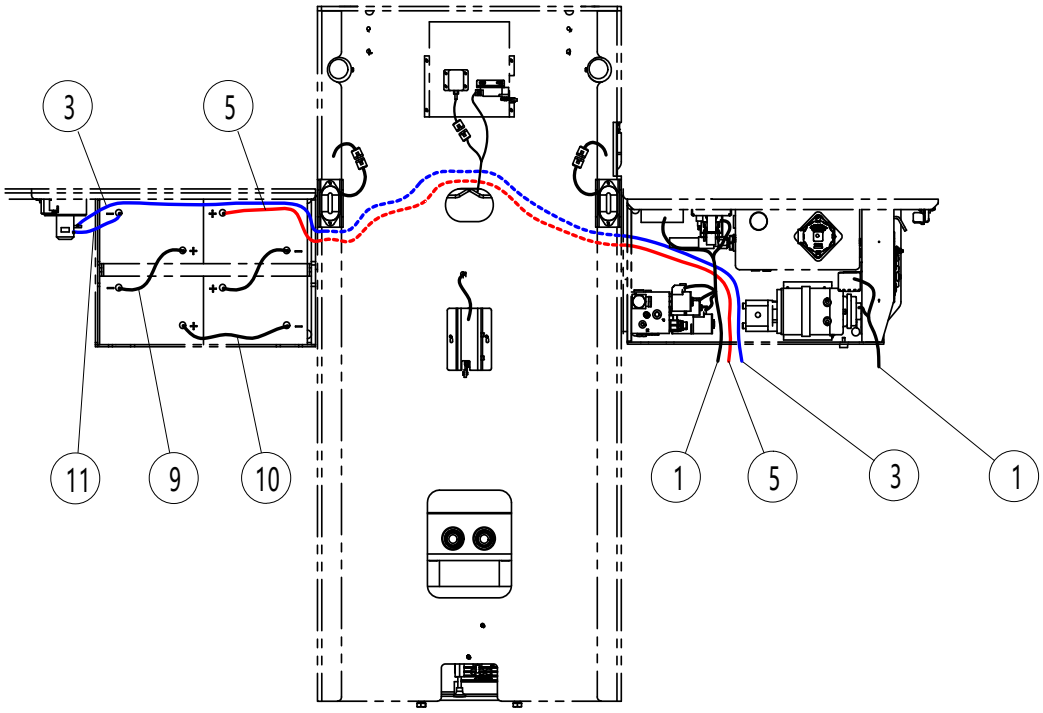

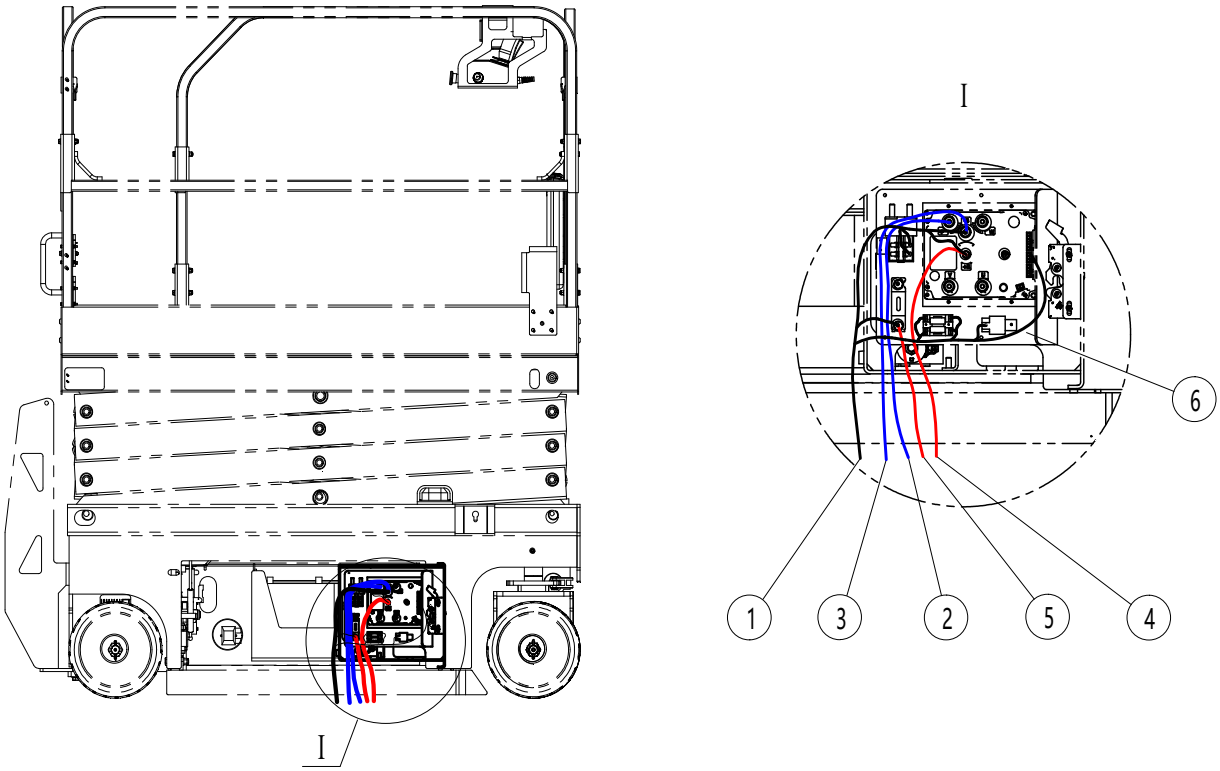

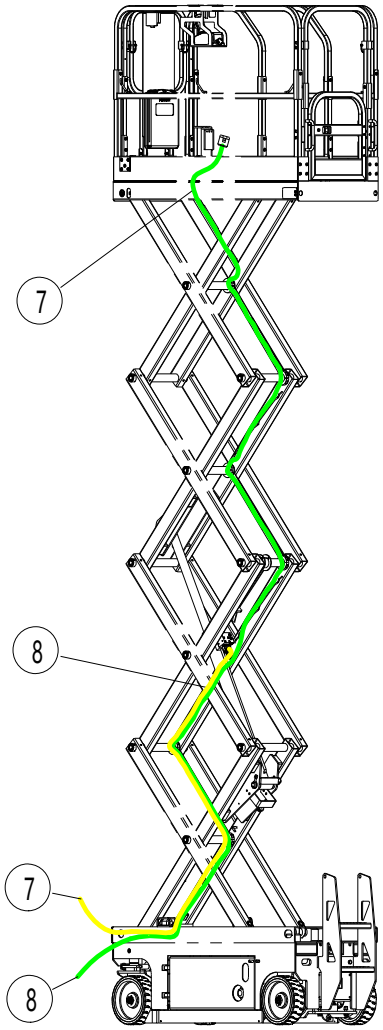
7
8
7
8

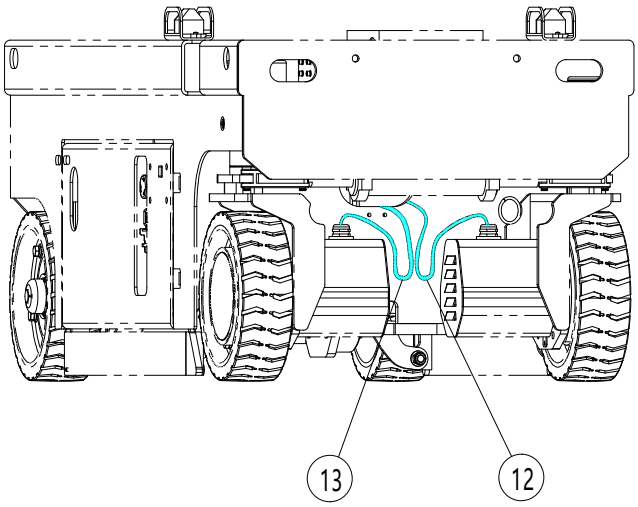
13
12

Table 13.2 Wiring harness(SC08EC)

NO.	Art No.	Description	Qty.	Note
1	606033010012	Wiring harness	1	
2	606033010006	Cable	1	
3	606033010007	Cable	1	
4	606033010005	Cable	1	
5	605533010005	Cable	1	
6	606033010013	Electronic components	1	
7	605533010001	Wiring harness	1	
8	605533010002	Wiring harness	1	
9	605533010011	Cable	2	
10	605533010012	Cable	1	
11	605533010003	Cable	1	
12	606033010003	Wiring harness	1	
13	606033010004	Wiring harness	1	

Figure 13.3 Wiring harness（SC08HC-Li）

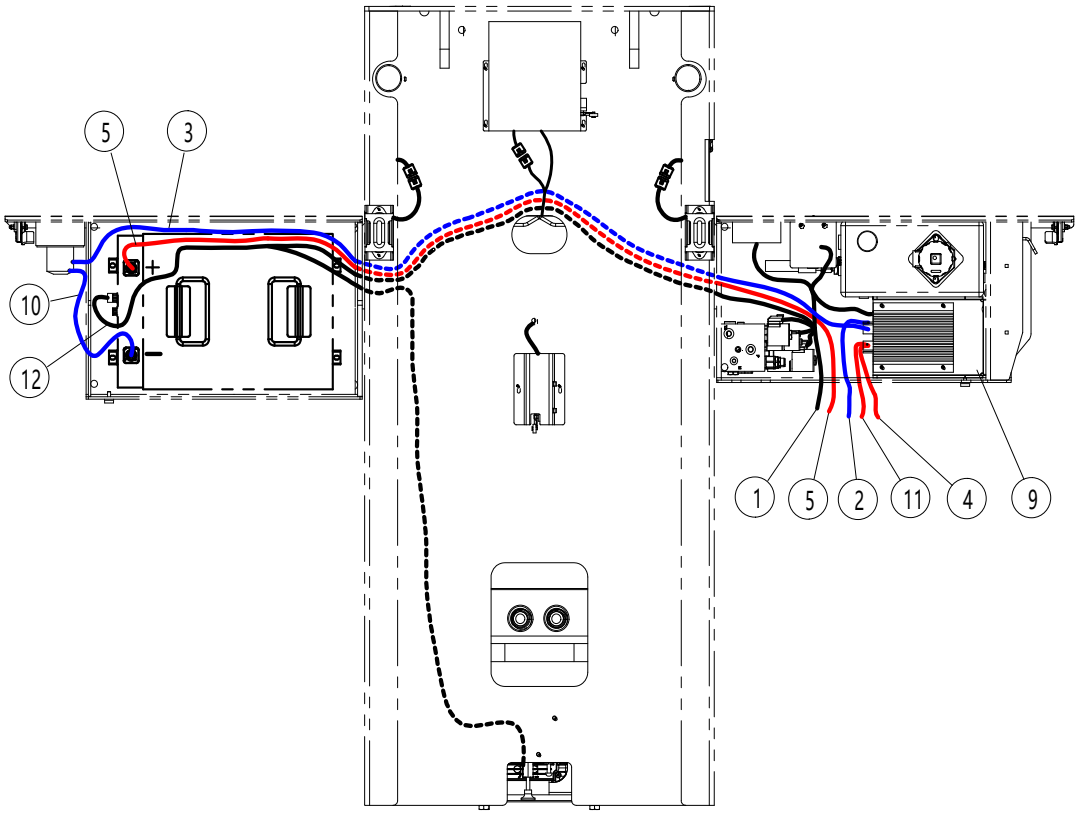

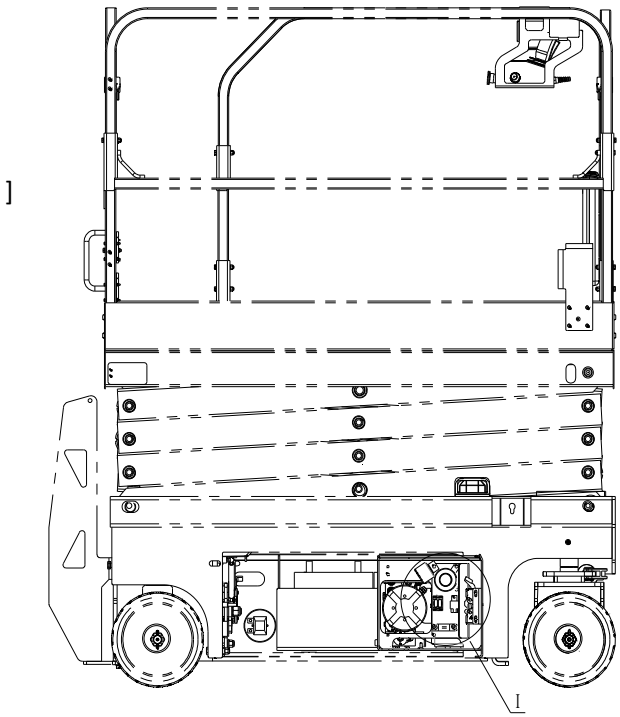

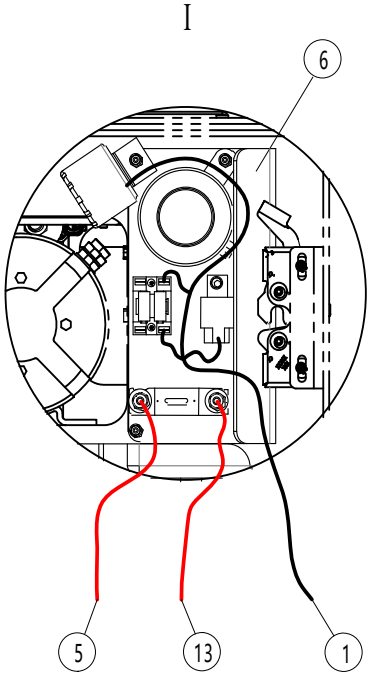

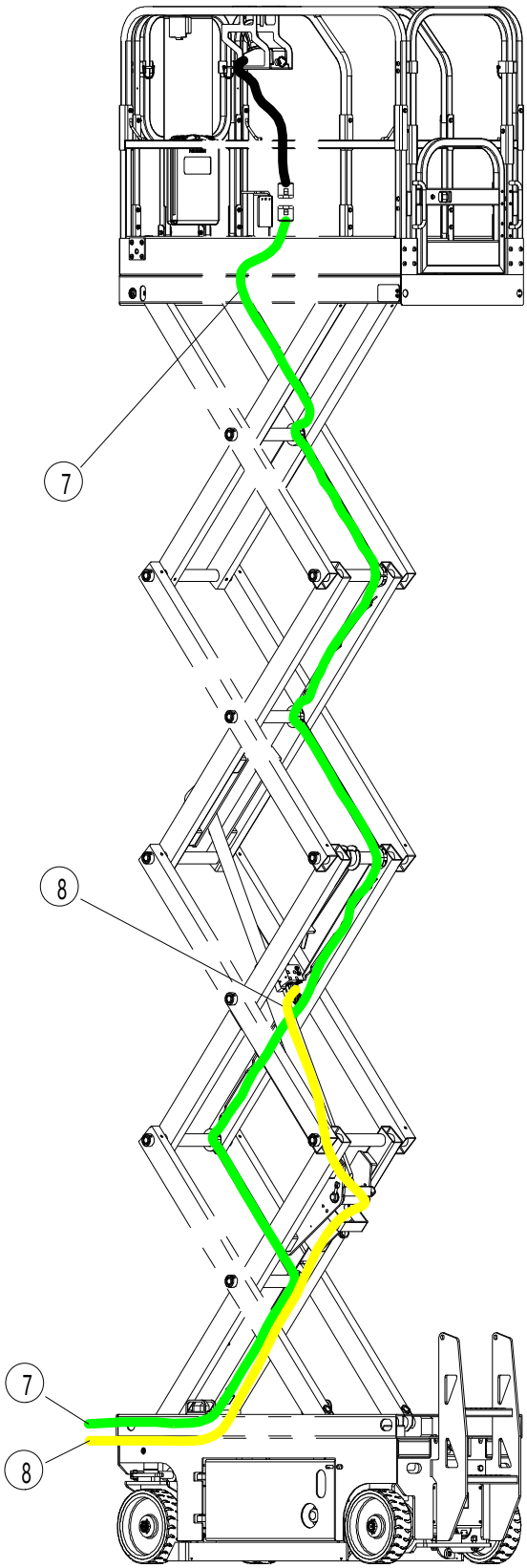
7
8
7
8

Table 13.3 Wiring harness(SC08HC-Li)

NO.	Art No.	Description	Qty.	Note
1	605533010015	Wiring harness	1	
2	605533010010	Cable	1	
3	605533010006	Cable	1	
4	605533010009	Cable	1	
5	606033010015	Cable	1	
6	605533010014	Electrical component assembly	1	
7	605533010001	Wiring harness	1	
8	605533010002	Wiring harness	1	
9	605533010013	Electronic components	1	
10	606033010014	Cable	1	
11	605533010017	Cable	1	
12	606033010011	Wiring harness	1	

Figure 13.4 Wiring harness（SC08EC-Li）

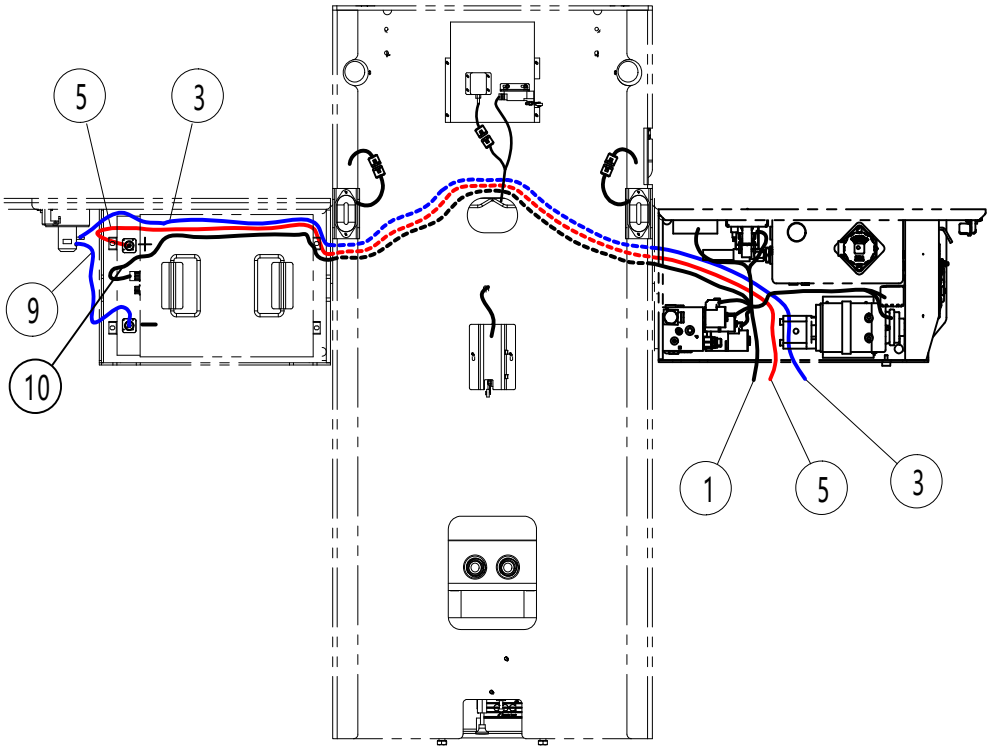

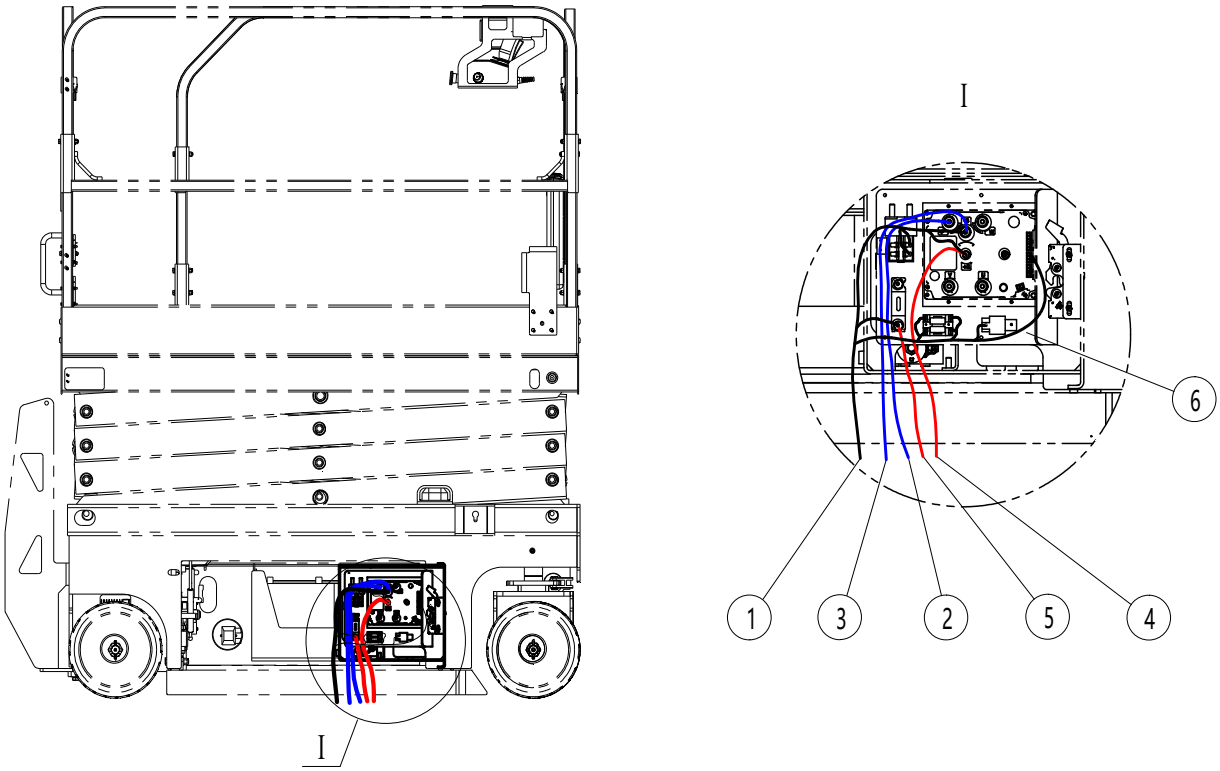

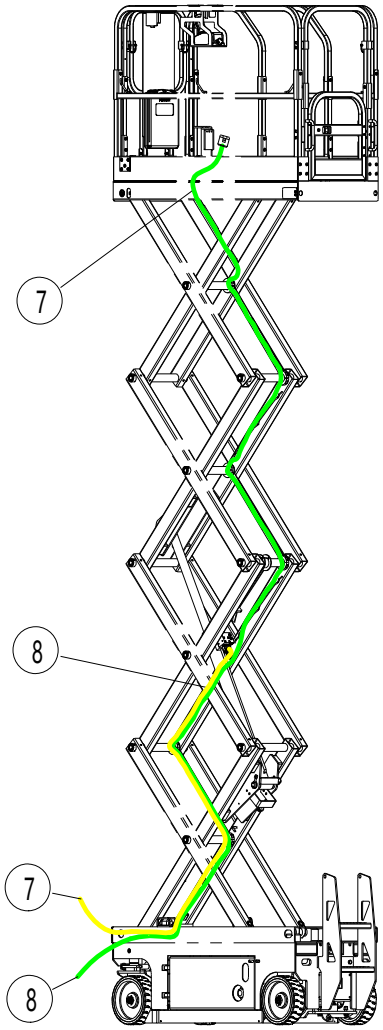
7
8
7
8

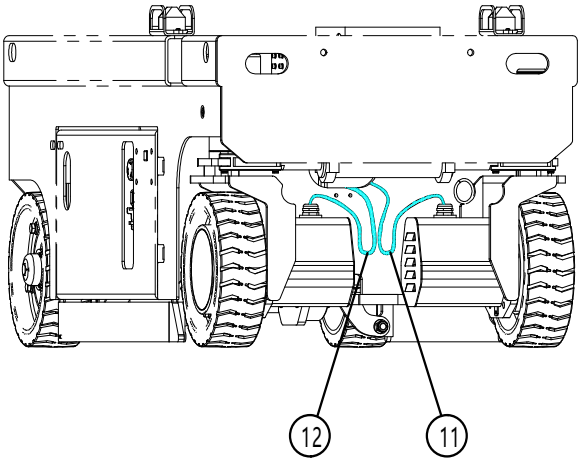
12
11

Table 13.4 Wiring harness(SC08EC-Li)

NO.	Art No.	Description	Qty.	Note
1	606033010012	Wiring harness	1	
2	606033010006	Cable	1	
3	606033010007	Cable	1	
4	606033010005	Cable	1	
5	606033010015	Cable	1	
6	606033010013	Electronic components	1	
7	605533010001	Wiring harness	1	
8	605533010002	Wiring harness	1	
9	606033010014	Cable	1	
10	606033010011	Wiring harness	1	
11	606033010003	Wiring harness	1	
12	606033010004	Wiring harness	1	

Figure 14 Cylinder

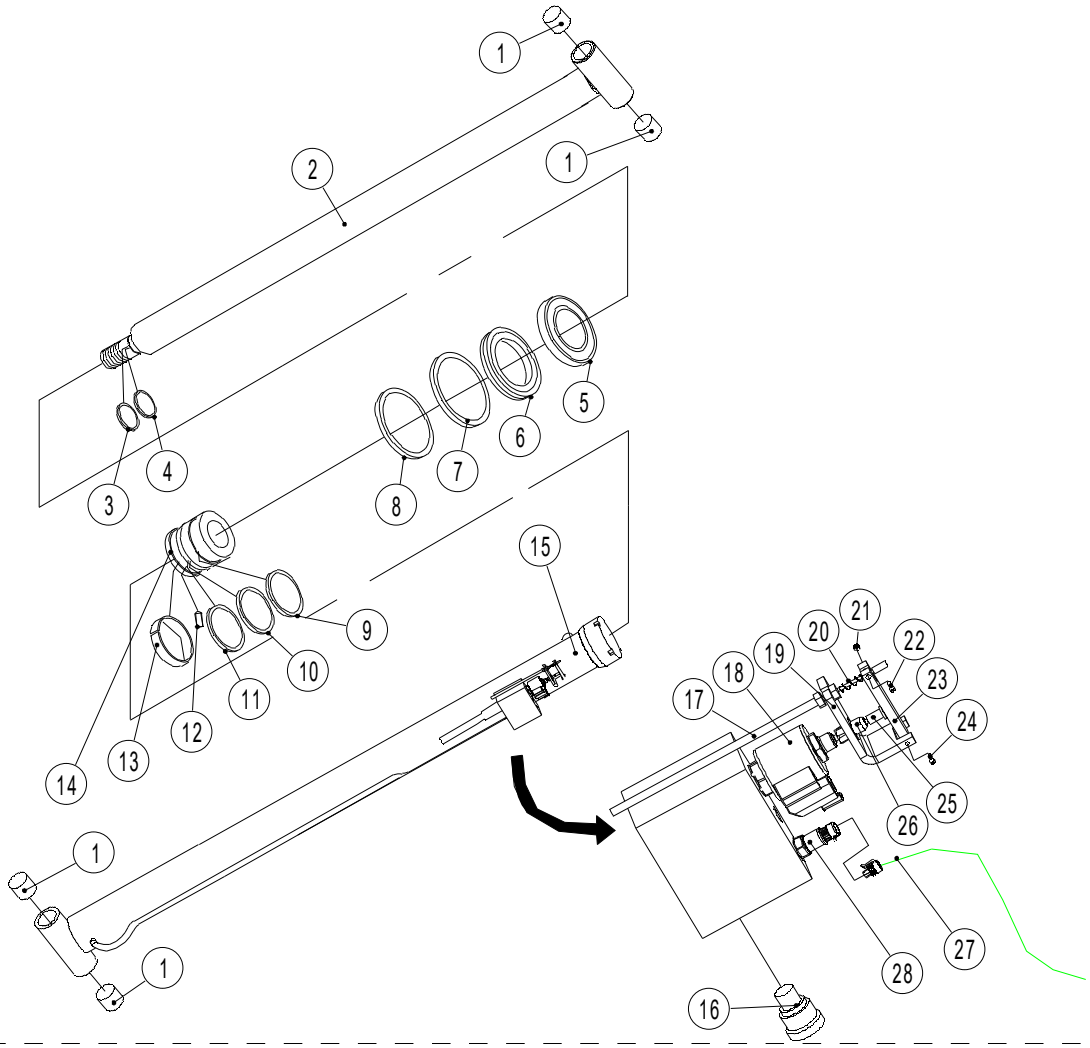

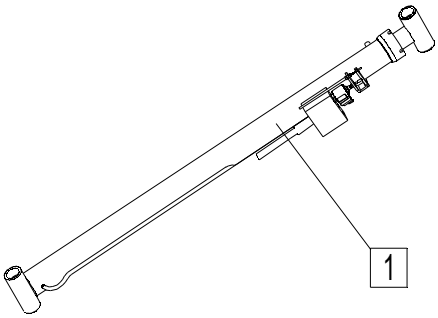

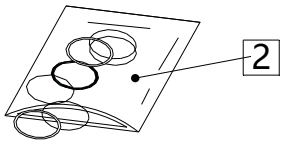

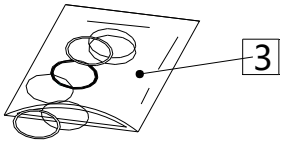

Table14 Cylinder

NO.	Art No.	Description	Qty.	Note
1	940500200025	Sleeve	4	
2	Does not provide a separate sale	Piston rod	1	
3	Does not provide a separate sale	O ring	1	
4	Does not provide a separate sale	Collar	1	
5	Does not provide a separate sale	Dust oil seal	1	
6	Does not provide a separate sale	Seal ring	1	
7	Does not provide a separate sale	O ring	1	
8	Does not provide a separate sale	Supporting ring	2	
9	Does not provide a separate sale	O ring	1	
10	Does not provide a separate sale	Collar	1	
11	Does not provide a separate sale	Seal ring	1	
12	Does not provide a separate sale	Screw	1	
13	Does not provide a separate sale	Guide ring	1	
14	Does not provide a separate sale	Piston	1	
15	Does not provide a separate sale	Cylinder	1	
16	605523510017	One-way valve	1	
17	605523510022	Manual descent device	1	
18	605523510015	Valve	1	
19	609023520001	Swinging rod seat	1	
20	609023520002	Spring	1	
21	910300500011	Nut	2	
22	910200200005	Screw	1	
23	609023520003	Swinging rod	1	
24	910200200008	Screw	1	
25	609023520005	The top rod	1	
26	609023520006	Nut	1	
27	605566010002	Wiring harness	1	
28	921800100015	Sensor	1	
1	605523510020	Cylinder	1	
2	605598520000	Sealing bag	1	NO.：3、4、9、10、11
3	605598520001	Sealing bag	1	NO.：5、6、7、8

Figure 15.1 Power box piping

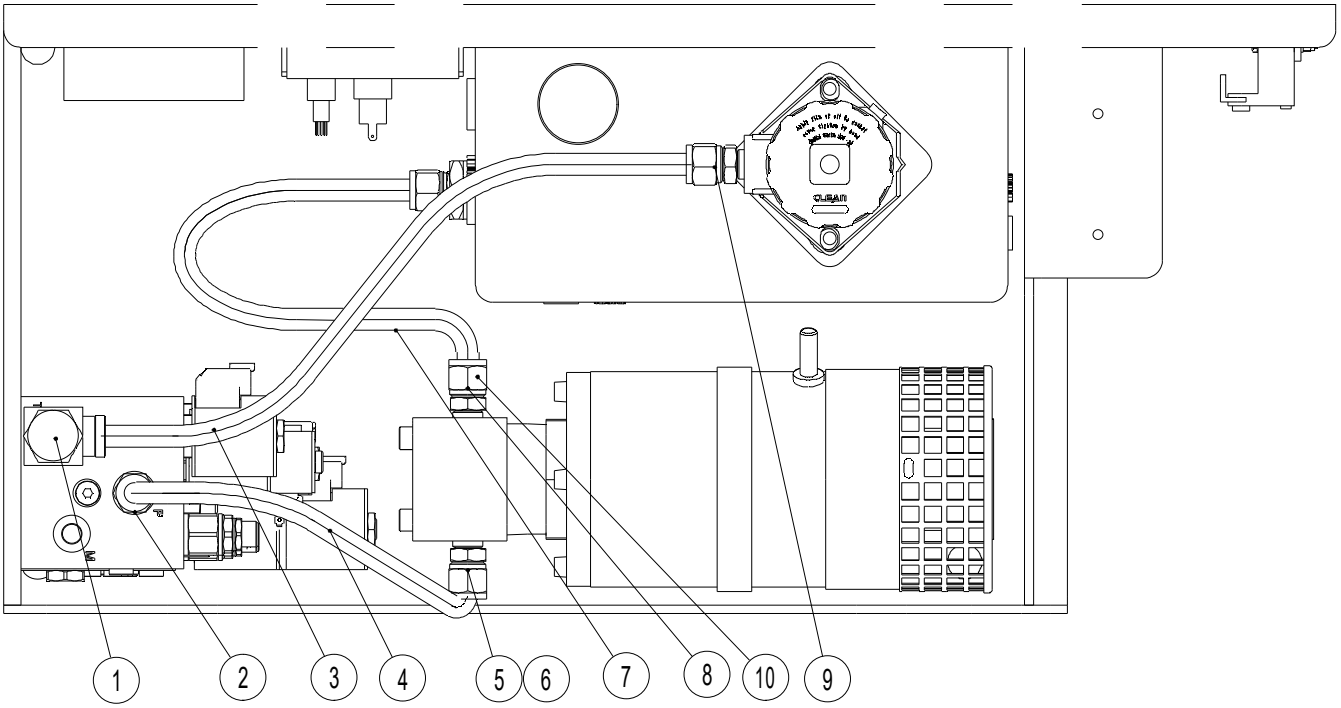

Table 15.1 Power box piping

NO.	Art No.	Description	Qty.	Note
1	950400300012	Joint	1	
2	950400300009	Joint	1	
3	602023510015	Hydraulic hose	1	
4	605523510007	Hydraulic hose	1	
5	950400400013	Joint	1	
6	950400200004	Joint	1	
7	605523510010	Hydraulic hose	1	
8	950400400006	Joint	1	
9	950400300011	Joint	1	
10	950400200008	Joint	1	

Figure 15.2 Walking system piping（SC08HC）

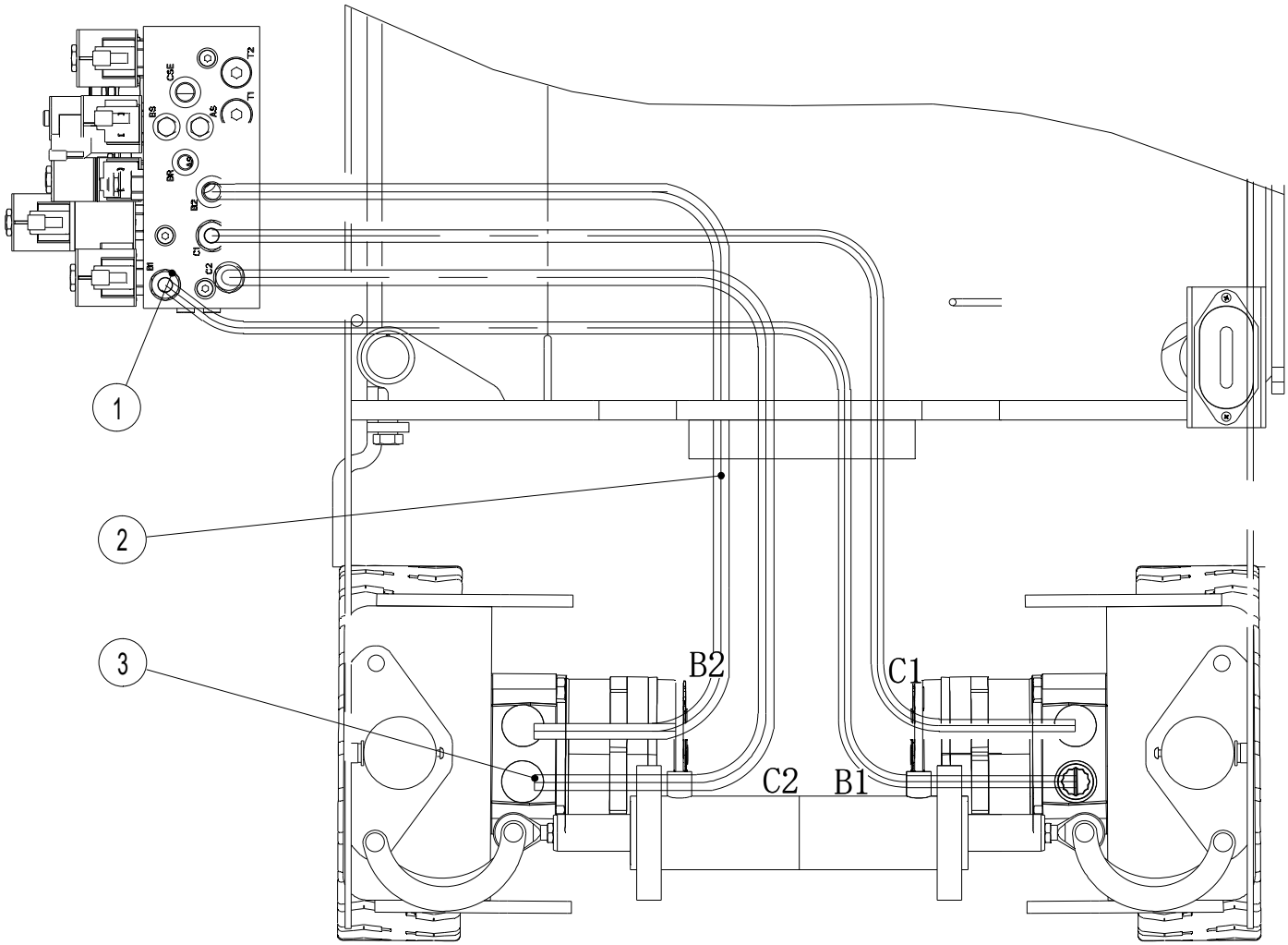

Table 15.2 Walking system piping

NO.	Art No.	Description	Qty.	Note
1	950400300007	Joint	4	
2	605523510011	Hydraulic hose	4	
3	950400300014	Joint	4	

Figure 15.3 Steering system piping

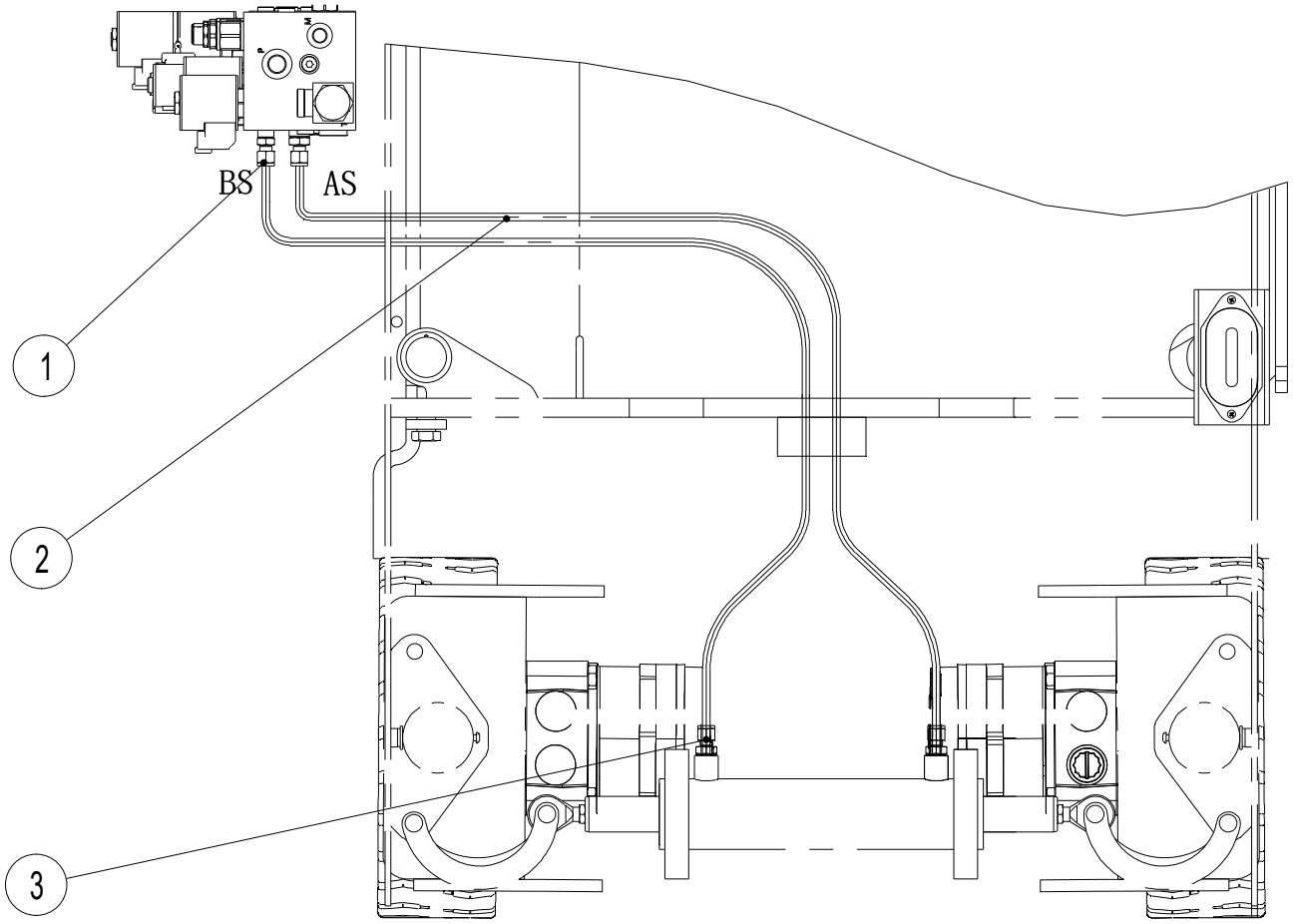

Table 15.3 Steering system piping

NO.	Art No.	Description	Qty.	Note
1	950400300003	Joint	7	
2	605523510012	Hydraulic hose	2	
3	950400400001	Joint	2	

Figure 15.4 Braking system piping（SC08HC）

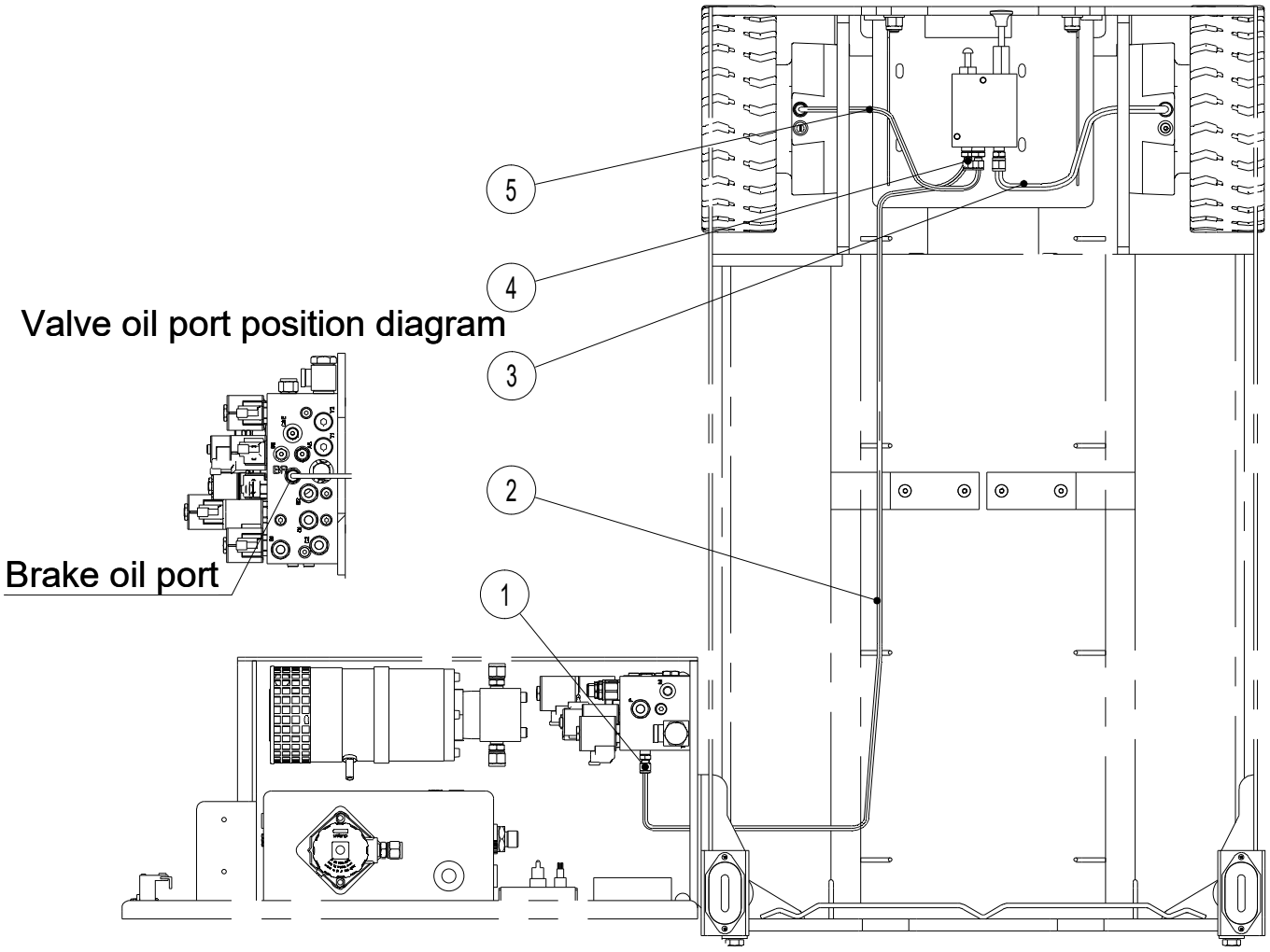

Table 15.4 Braking system piping

NO.	Art No.	Description	Qty.	Note
1	950400300003	Joint	1	
2	605523510001	Hydraulic hose	1	
3	505624020003	Hydraulic hose	1	
4	950400400013	Joint	5	
5	605523510002	Hydraulic hose	1	

Figure 15.5 Upper system piping

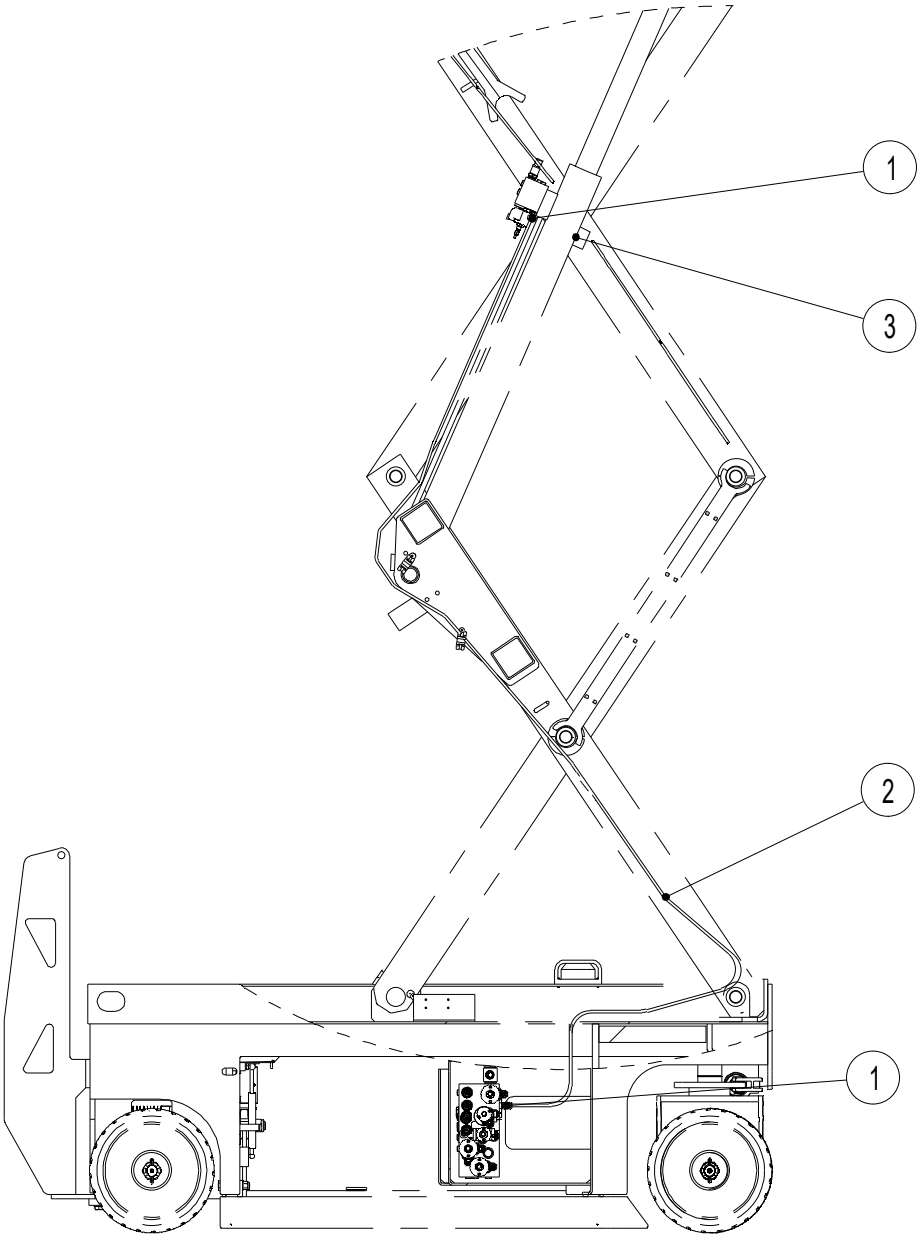

Table 15.5 Upper system piping

NO.	Art No.	Description	Qty.	Note
1	950400300004	Joint	2	
2	605523510013	Hydraulic hose	1	
3	605523510014	Silencer	1	

Figure 16 Steering Cylinder

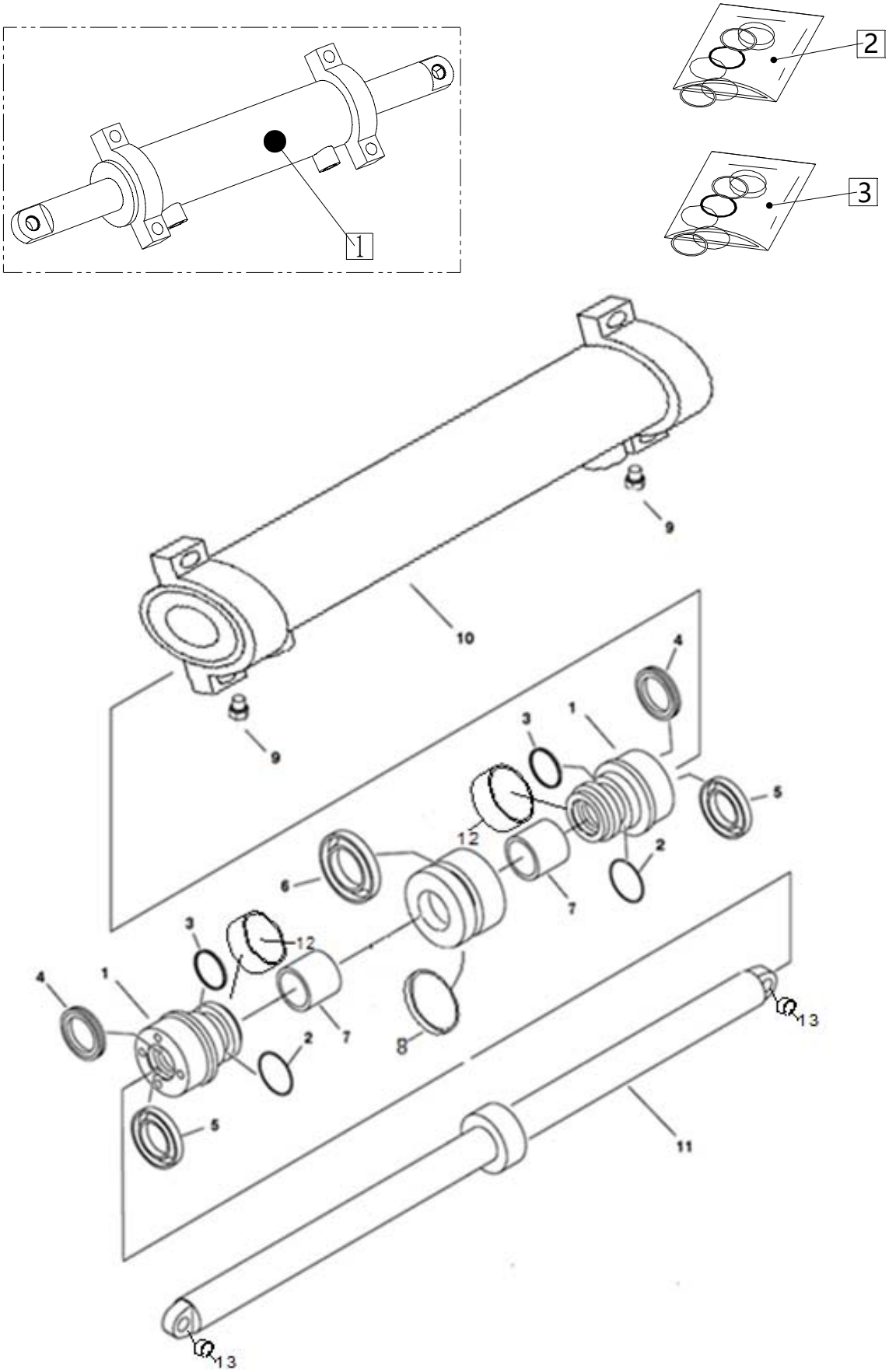

Table 16 Steering Cylinder

NO.	Art No.	Description	Qty.	Note
1	Does not provide a separate sale	End cover	2	
2	Does not provide a separate sale	O ring	2	
3	Does not provide a separate sale	Collar	2	
4	Does not provide a separate sale	Seal ring	2	
5	Does not provide a separate sale	Dust oil seal	2	
6	Does not provide a separate sale	Seal ring	1	
7	Does not provide a separate sale	Sleeve	2	
8	Does not provide a separate sale	Guide ring	2	
9	Does not provide a separate sale	Plug	2	
10	Does not provide a separate sale	Cylinder	1	
11	Does not provide a separate sale	Piston rod	1	
12	Does not provide a separate sale	Shaft sleeve	2	
13	940500200021	Sleeve	2	
1	605523510021	Steering Cylinder	1	
2	605598520002	Sealing bag	1	NO：6、8
3	605598520003	Sealing bag	2	NO:2、3、4、5

Figure 17 Hydraulic oil tank

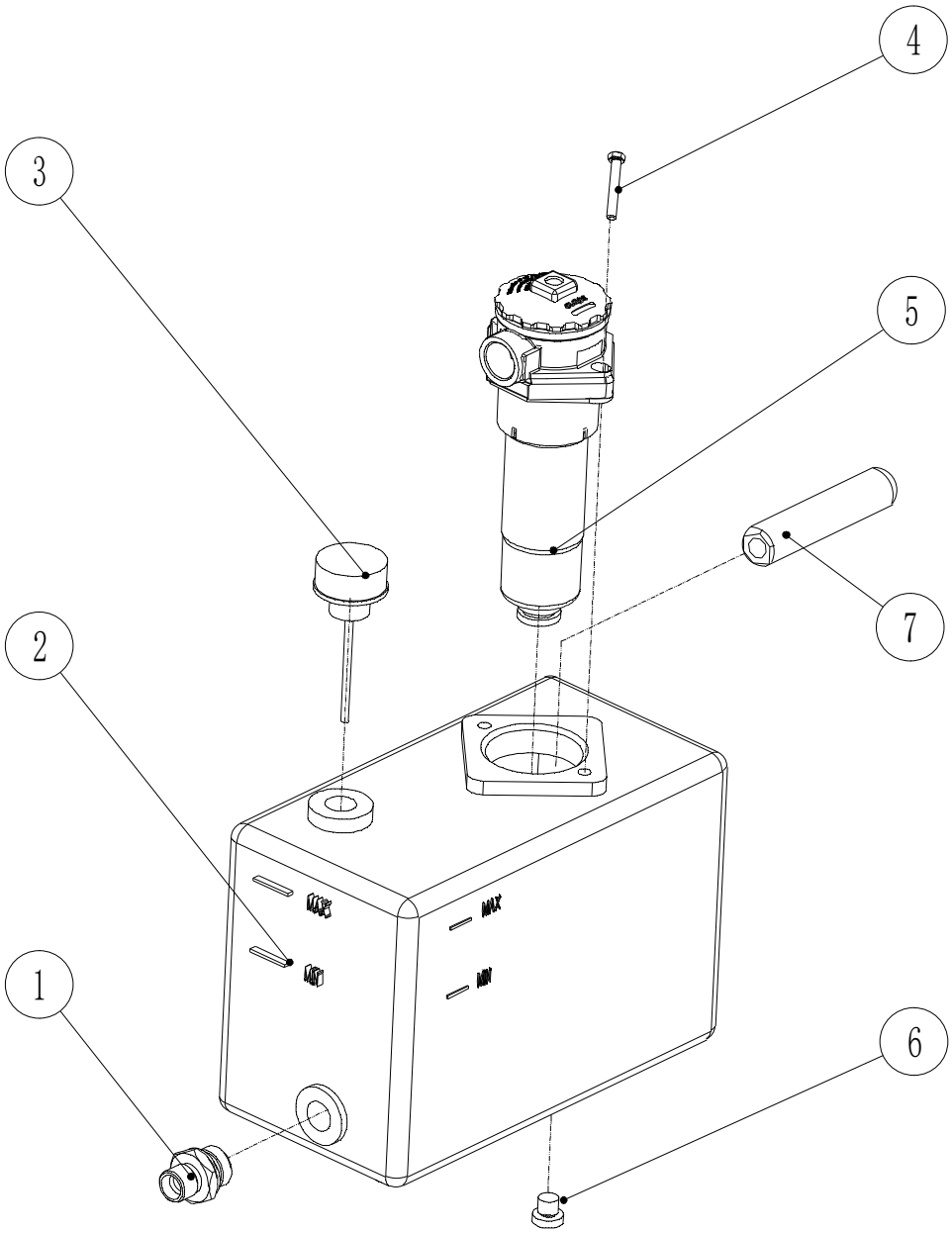

Table 17 Hydraulic oil tank

NO.	Art No.	Description	Qty.	Note
1	950400400006	Nut	1	
2	605598520004	Oil tank	1	
3	602098520020	Nut	1	
4	910100300020	Bolt	2	
5	951000300003	Filter	1	
6	602098520024	Plug	1	
7	602098520023	Filter	1	

Figure 18.1 Electrical component assembly（SC08HC）

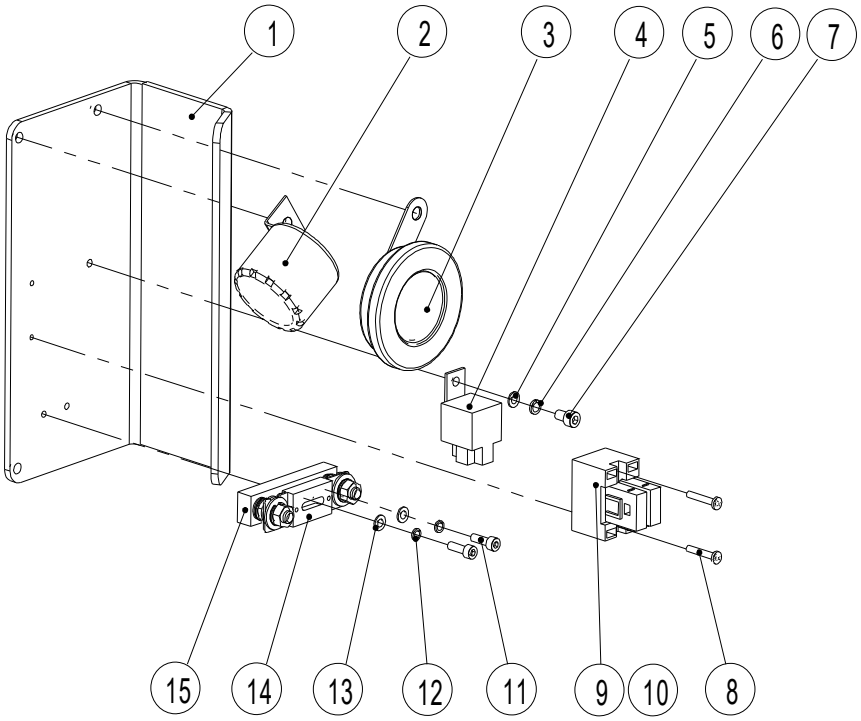

Table 18.1 Electrical component assembly (SC08HC)

NO.	Art No.	Description	Qty.	Note
1	605510020012	Mounting plate	1	
2	920500100002	Horn buzzer	1	
3	920500100001	Horn	1	
4	920800100001	Relay	1	
5	910400100005	Washer	1	
6	910400500005	Spring washer	1	
7	910200200032	Screw	1	
8	910200500027	Screw	2	
9	920100400005	Fuse holder	1	
10	920100200002	Fuse	1	
11	910200200023	Screw	2	
12	910400500004	Spring washer	2	
13	910400100004	Washer	2	
14	920100100011	Fuse	1	
15	920100400002	Fuse holder	1	

Figure 18.2 Electronic control components（SC08EC）

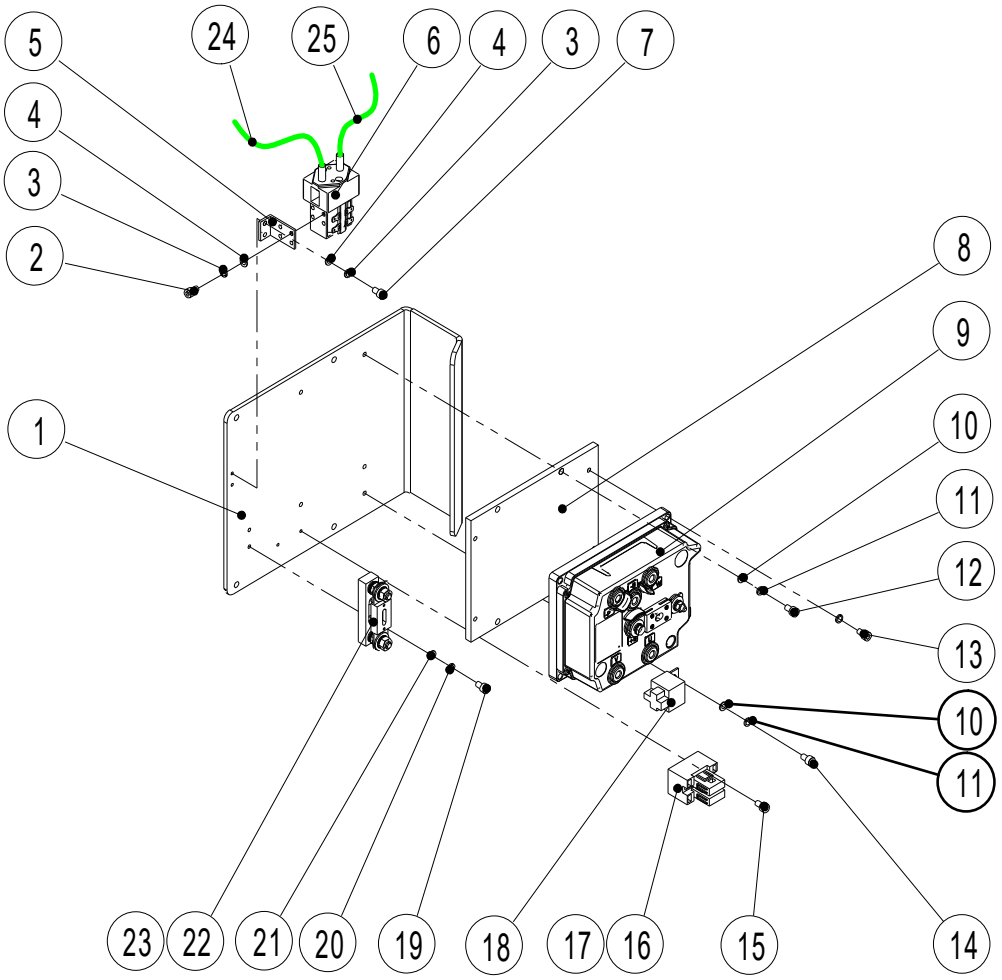

Table 18.2 Electronic control components (SC08EC)

NO.	Art No.	Description	Qty.	Note
1	606010020008	Mounting plate	1	
2	910200500034	Screw	4	
3	910400500003	Spring washer	6	
4	910400100003	Washer	6	
5	921300400003	Fixing plate	1	
6	920700100004	Contactor	1	
7	910200500022	Screw	2	
8	606033020001	Aluminum plate	1	
9	921400100049	Controller	1	
10	910400100005	Washer	9	
11	910400500005	Spring washer	9	
12	910200200035	Screw	4	
13	910200200036	Screw	4	
14	910200200032	Screw	1	
15	910200500027	Screw	2	
16	920100400005	Fuse holder	1	
17	920100200002	Fuse	1	
18	920800100001	Relay	1	
19	910200500040	Screw	2	
20	910400500004	Spring washer	2	
21	910400100004	Washer	2	
22	920100400002	Fuse holder	1	
23	920100100024	Fuse	1	
24	606033010010	Cable	1	
25	606033010008	Cable	1	

Figure 18.3 Electronic control components（SC08HC）

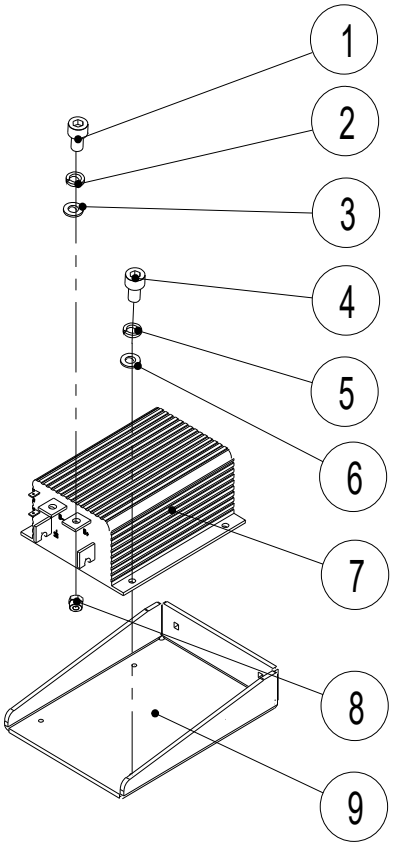

Table 18.3 Electronic control components (SC08HC)

NO.	Art No.	Description	Qty.	Note
1	910200200057	Screw	3	
2	910400500006	Spring washer	3	
3	910400100006	Washer	3	
4	910200200034	Screw	4	
5	910400500005	Spring washer	4	
6	910400100005	Washer	4	
7	921400100044	Controller	1	
8	910300100006	Nut	3	
9	605510020009	Mounting base	1	

Figure 19.1 Charger assembly（SC08HC/SC08EC）

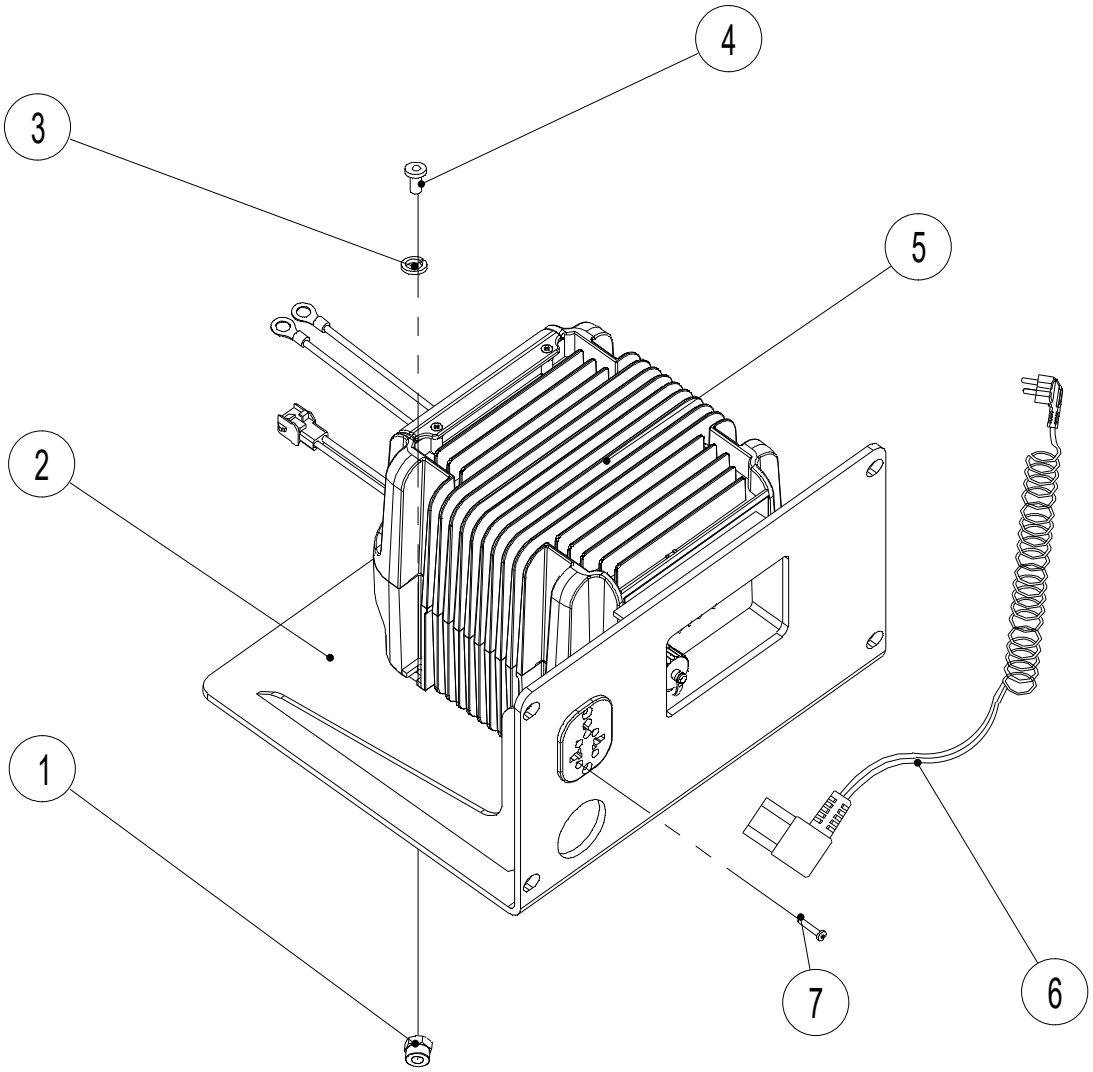

Table 19.1 Charger assembly(SC08HC/SC08EC)

NO.	Art No.	Description	Qty.	Note
1	910300500003	Nut	4	
2	605521510002	Support	1	
3	910400100005	Washer	4	
4	910200200036	Screw	4	
5	605536510001	Charger	1	
6	921500200020	Spring line	1	(Asian)
	921500200017	Spring		(Europe)
	921500200014	Spring		(America)
	921500200015	Spring		(Australia)
	921500200018	Spring		(Italy)
	921500200019	Spring		(Switzerland)
	921500200016	Spring		(Britain)
	921500200036	Spring		(Israel)
	921500200041	Spring		(Afghanistan)
	921500200069	Spring		(Brazil)
7	910200300003	Screw	2	

Figure 19.2 Charger assembly（SC08HC-Li/SC08EC-Li）

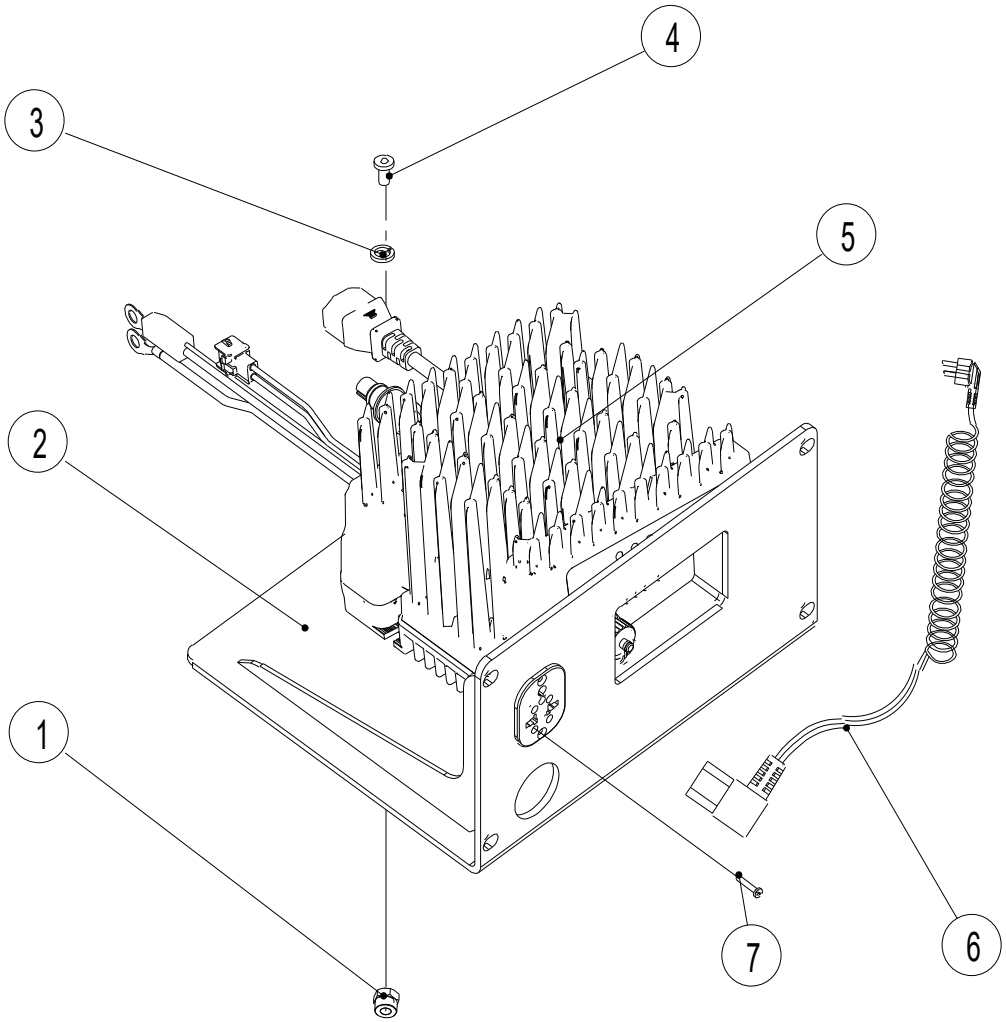

Table 19.2 Charger assembly(SC08HC-Li/SC08EC-Li)

NO.	Art No.	Description	Qty.	Note
1	910300500003	Nut	4	
2	605521510002	Support	1	
3	910400100005	Washer	4	
4	910200200036	Screw	4	
5	921000100079	Charger	1	
6	921500200020	Spring line	1	(Asian)
	921500200017	Spring		(Europe)
	921500200014	Spring		(America)
	921500200015	Spring		(Australia)
	921500200018	Spring		(Italy)
	921500200019	Spring		(Switzerland)
	921500200016	Spring		(Britain)
	921500200036	Spring		(Israel)
	921500200041	Spring		(Afghanistan)
	921500200069	Spring		(Brazil)
7	910200300003	Screw	2	

Figure 20 Parts of collision protection mechanism（optional）

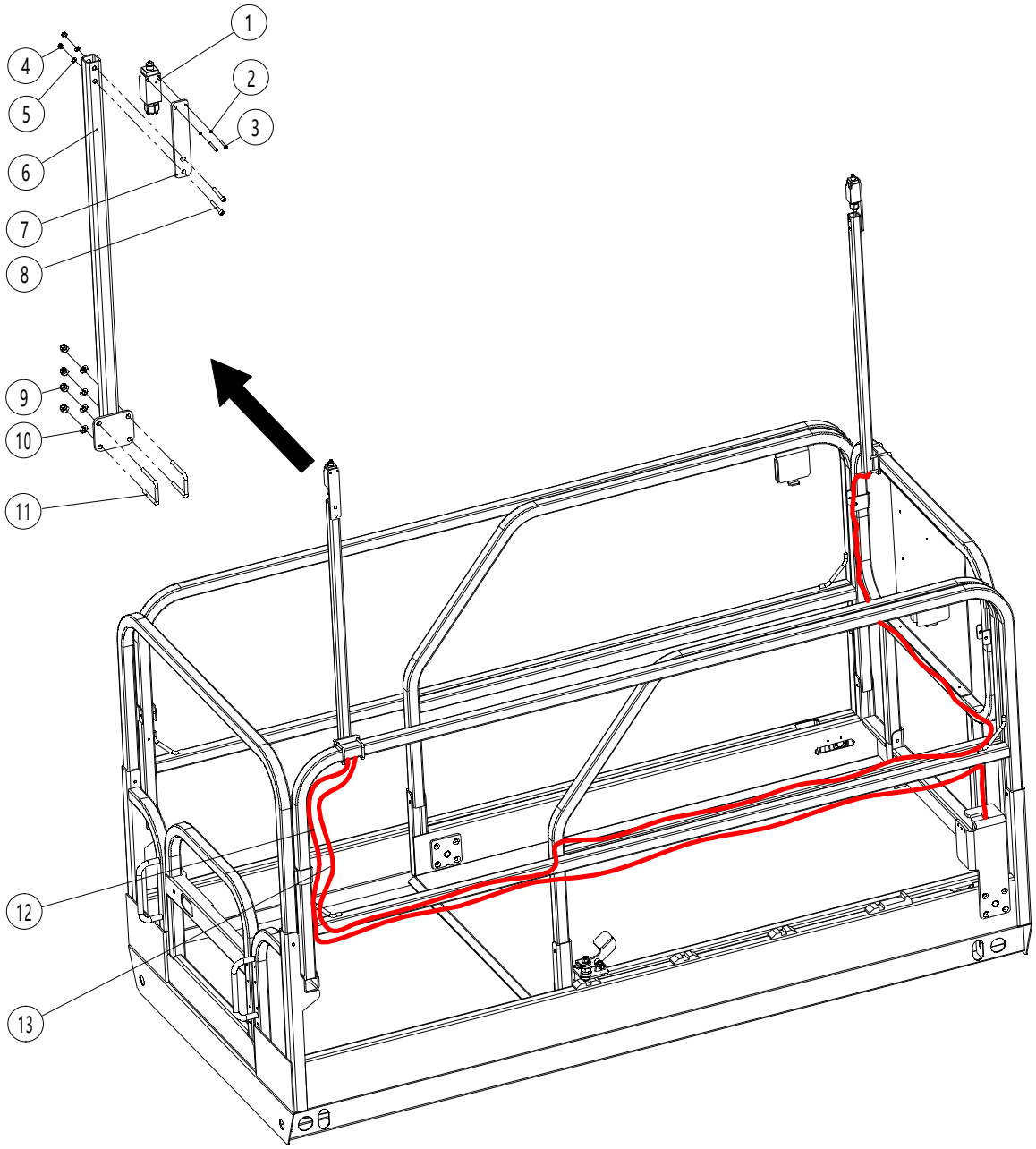

Table 20 Parts of collision protection mechanism(optional)

NO.	Art No.	Description	Qty.	Note
1	920200600003	Limit switch	2	
2	910400500004	Washer	4	
3	910200200022	Screw	4	
4	910300500004	Nut	4	
5	910400100006	Washer	4	
6	602019510007	Pole	2	
7	602019520026	Plate	2	
8	910100100024	Bolt	4	
9	910300500003	Nut	8	
10	910400100005	Washer	8	
11	602019520027	U Bolt	4	
12	605519510006	Wiring harness	1	
13	605519510005	Wiring harness	1	