# 目录CONTENTS


| 序号Item | 名称 Description | | 页码 Page |
|---|---|---|---|
| 图1 Fig.1 | 蓄电池及安装 | BATTERY AND INSTALLATION | 1 |
| 图2 Fig.2 | 行走电机及传动系统 | TRAVEL MOTOR AND TRANSMISSION SYSTEM | 2 |
| 图3 Fig.3 | 变速箱 | Transmission | 3 |
| 图4 Fig.4 | 起升电机及安装 | LIFTING MOTOR AND INSTALLATION | 6 |
| 图5 Fig.5 | 电气系统 | ELECTRICAL SYSTEM | 7 |
| 图6 Fig.6 | 电气系统 | ELECTRICAL SYSTEM | 8 |
| 图7 Fig.7 | 控制器及安装 | Controller and installation | 10 |
| 图8 Fig.8 | 加速器及安装 | ACCELERATOR AND INSTALLATION | 11 |
| 图9 Fig.9 | 前轮总成 | FRONT WHEEL ASSEMBLY | 12 |
| 图10 Fig.10 | 转向装置及安装 | STEERING DEVICE AND INSTALLATION | 13 |
| 图11 Fig.11 | 转向桥及安装 | STEERING AXLE ASS'Y | 14 |
| 图12 Fig.12 | 后轮总成 | REAR-WHEEL ASSEMBLY | 16 |
| 图13 Fig.13 | 护顶架及安装 | OVERHEAD GUARD ASS'Y | 17 |
| 图14 Fig.14 | 手制动操纵 | HAND BRAKE CONTROL | 18 |
| 图15 Fig.15 | 脚制动操纵 | FOOT BRAKE CONTROL | 19 |
| 图16 Fig.16 | 车架 | CHASSIS BODY | 20 |
| 图17 Fig.17 | 平衡重 | COUNTER WEIGHT | 21 |
| 图18 Fig.18 | 仪表架及机罩安装 | DISPLAY BRACKET AND HOOD INSTALLATION | 22 |
| 图19 Fig.19 | 仪表架及机罩安装 | DISPLAY BRACKET AND HOOD INSTALLATION | 23 |

| | | | |
|---|---|---|---|
| 图20 Fig.20 | 座椅及安装 | SEAT ASS'Y | 25 |
| 图21 Fig.21 | 多路阀换向操纵（二联） | MULTI-WAY VALVE CONTROL（TWO-THROW） | 26 |
| 图22 Fig.22 | 多路阀换向操纵（三联） | MULTI-WAY VALVE CONTROL（THREE-THROW） | 27 |
| 图23 Fig.23 | 多路阀换向操纵（四联） | MULTI-WAY VALVE CONTROL（FOUR-THROW） | 29 |
| 图24 Fig.24 | 工作油箱及安装 | FUEL TANK ASS'Y | 31 |
| 图25 Fig.25 | 液压系统 | HYDRAULIC SYSTEM | 32 |
| 图26 Fig.26 | 门架管路系统(基本型二联) | MAST HYDRAULIC SYSTEM(NORMAL MAST TWO-THROW) | 34 |
| 图27 Fig.27 | 1.8T门架管路系统(基本型三联) | MAST HYDRAULIC SYSTEM(NORMAL MAST THREE-THROW) | 35 |
| 图28 Fig.28 | 2.5T门架管路系统(基本型三联) | MAST HYDRAULIC SYSTEM(NORMAL MAST THREE-THROW) | 37 |
| 图29 Fig.29 | 1.8T门架管路系统(基本型四联) | MAST HYDRAULIC SYSTEM(NORMAL MAST FOUR-THROW) | 39 |
| 图30 Fig.30 | 2.5T门架管路系统(基本型四联) | MAST HYDRAULIC SYSTEM(NORMAL MAST FOUR-THROW) | 40 |
| 图31 Fig.31 | 1.8T门架管路系统(三级全自由二联) | MAST HYDRAULIC SYSTEM(FULL FREE 3-STAGE MAST TWO-THROW) | 42 |
| 图32 Fig.32 | 2.5T门架管路系统(三级全自由二联) | MAST HYDRAULIC SYSTEM(FULL FREE 3-STAGE MAST TWO-THROW) | 44 |
| 图33 Fig.33 | 1.8T门架管路系统(三级全自由三联) | MAST HYDRAULIC SYSTEM(FULL FREE 3-STAGE MAST THREE-THROW) | 46 |
| 图34 Fig.34 | 2.5T门架管路系统(三级全自由三联) | MAST HYDRAULIC SYSTEM(FULL FREE 3-STAGE MAST THREE-THROW) | 49 |
| 图35 Fig.35 | 1.8T门架管路系统(三级全自由四联) | MAST HYDRAULIC SYSTEM(FULL FREE 3-STAGE MAST FOUR-THROW) | 52 |

| | | | |
|---|---|---|---|
| 图36 Fig.36 | 2.5T门架管路系统(三级全自由四联) | MAST HYDRAULIC SYSTEM(FULL FREE 3-STAGE MAST FOUR-THROW) | 54 |
| 图37 Fig.37 | 货叉 | FORK | 56 |
| 图38 Fig.38 | 货叉架(基本型) | LIFT BACKET（NORMAL MAST) | 58 |
| 图39 Fig.39 | 货叉架(三级全自由) | LIFT BACKET（FULL FREE 3-STAGE MAST) | 59 |
| 图40 Fig.40 | 门架(基本型) | MAST（NORMAL MAST) | 60 |
| 图41 Fig.41 | 门架(三级全自由) | MAST（FULL FREE 3-STAGE MAST) | 63 |
| 图42 Fig.42 | 1.8T起升油缸(基本型) | 1.8T LIFT CYLINDER(NORMAL MAST) | 67 |
| 图43 Fig.43 | 2.5T起升油缸(基本型) | 2.5T LIFT CYLINDER(NORMAL MAST) | 70 |
| 图44 Fig.44 | 前起升油缸(三级全自由) | FRONT LIFT CYLINDER(FULL FREE 3-STAGE MAST) | 73 |
| 图45 Fig.45 | 1.8T后起升油缸(三级全自由) | 1.8T REAR LIFT CYLINDER(FULL FREE 3-STAGE MAST) | 78 |
| 图46 Fig.46 | 2.5T后起升油缸(三级全自由) | 2.5T REAR LIFT CYLINDER(FULL FREE 3-STAGE MAST) | 81 |
| 图47 Fig.47 | 倾斜油缸 | TILTING CYLINDER | 84 |

图1/Fig. 1　　蓄电池及安装/ BATTERY AND INSTALLATION

R2B18-Li R2B25-Li

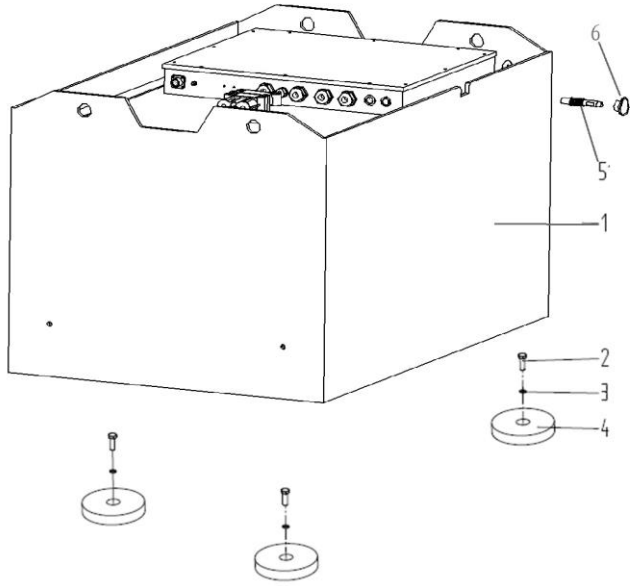


| 序号 | 物料号 | 代号 | 名称 | 数量 | 备注 |
|---|---|---|---|---|---|
| Item No. | ID. | Part No. | Description | Q' ty | Remark |
| A | | - | Battery and installation 蓄电池及安装 | 1 | |
| 1 | | RF018-7-1401000-A0 | Battery 蓄电池 | 1 | R2B25-Li |
| - | | RF025-7-1401000-A0 | Battery 蓄电池 | 1 | R2B25-Li |
| 2 | | GB/T5783-M10*25-8.8J | Bolt 10×25 螺栓M10×25 | 4 | |
| 3 | | GB/T97.1-10 | Washer 10 垫圈10 | 4 | |
| 4 | | RF025-7-1400003-A0 | The battery block 电瓶垫块 | 4 | |
| 5 | | RF025-7-1400002-A0 | Pin 销 | 1 | |
| 6 | | JB/T7142.2-1994 | Handle 把手 | 1 | |

图2/Fig. 2 行走电机及传动系统/ TRAVEL MOTOR AND TRANSMISSION SYSTEM

R2B18-Li R2B25-Li

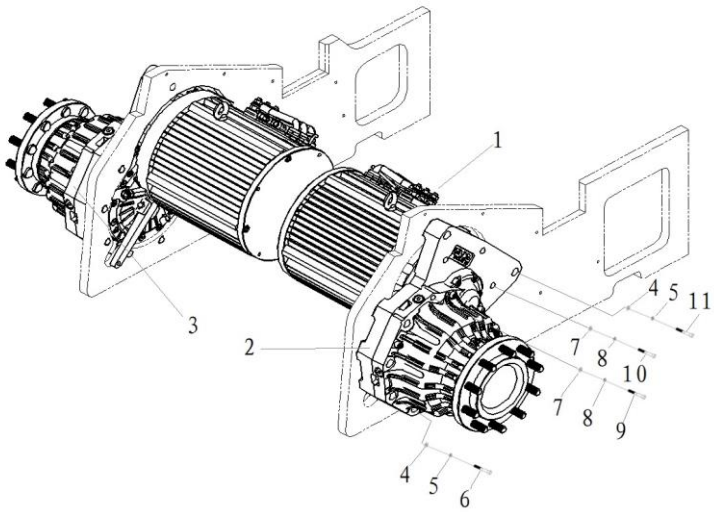


| 序号 | 物料号 | 代号 | 名称 | 数量 | 备注 |
|---|---|---|---|---|---|
| Item No. | ID. | Part No. | Description | Q' ty | Remark |
| A | | - | Transmission system 行走电机及传动系统 | 1 | |
| 1 | | RF025-7-1501000-A0 | Travel motor 行走电机 | 2 | |
| 2 | | RF025-7-1503000-A0 | Transmission (left) 左变速箱 | 1 | |
| 3 | | RF025-7-1502000-A0 | Transmission (right) 右变速箱 | 1 | |
| 4 | | GB/T97.1-2002 | Washer 16 垫圈16 | 14 | |
| 5 | | GB/T93-1987 | Washer 16 垫圈16 | 14 | |
| 6 | | GB/T70.1-2000 | Bolt M16×100 螺钉 M16×100 | 12 | |
| 7 | | GB/T97.1-2002 | Washer 10 垫圈10 | 10 | |
| 8 | | GB/T93-1987 | Washer 10 垫圈10 | 10 | |
| 9 | | GB/T70.1-2000 | Bolt M10×90 螺钉 M10×90 | 4 | |
| 10 | | GB/T5782-2000 | Bolt M10×60 螺钉 M10×60 | 6 | |
| 11 | | GB/T5782-2000 | Bolt M16×60 螺钉 M16×60 | 4 | |

图3/Fig. 3 变速箱/ Transmission

R2B18-Li R2B25-Li

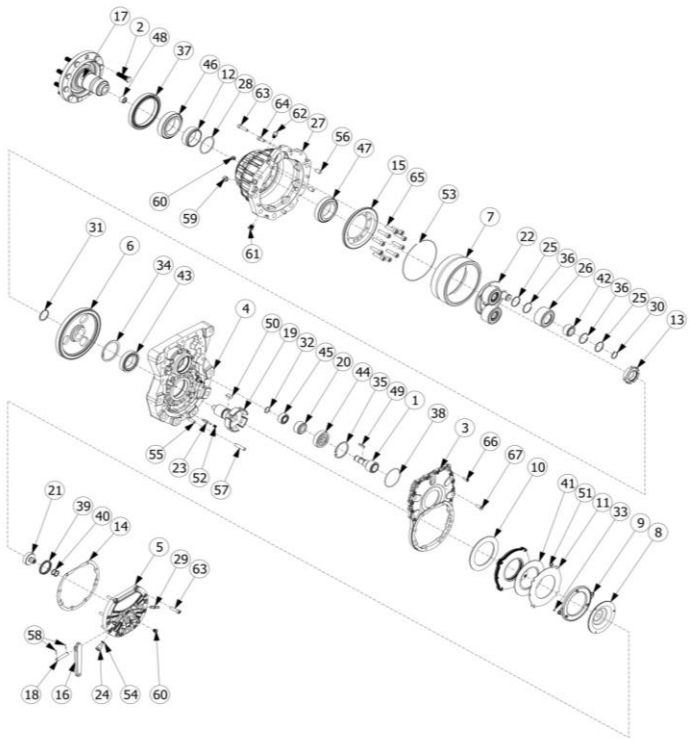


| 序号 | 物料号 | 代号 | 名称 | 数量 | 备注 |
|---|---|---|---|---|---|
| Item No. | ID. | Part No. | Description | Q' ty | Remark |
| A | | PMS701 | Transmission 变速箱 | 1 | |
| 1 | | 010.0050 | Input shaft | 1 | |
| 2 | | 207.0001 | Wheel hub bolt | 10 | |
| 3 | | 215.0093 | Aluminium cover | 1 | |
| 4 | | 215.0143 | Gearbox cover | 1 | |
| 5 | | 215.0153 | Brake cover | 1 | |
| 6 | | 250.0064 | Spur gear | 1 | |
| 7 | | 250.0073 | Planetary ring gear | 1 | |
| 8 | | 320.0030 | Elastic disc | 1 | |
| 9 | | 320.0038 | Disc pusher | 1 | |
| 10 | | 320.0047 | Spacer disc | 1 | |
| 11 | | 320.0048 | Steel disc | 7 | |
| 12 | | 330.0054 | Spacer | 1 | |
| 13 | | 470.0008 | Locking nut | 1 | |
| 14 | | 490.0003 | Brake seal | 1 | |
| 15 | | 520.0069 | Ring gear carrier disc | 1 | |
| 16 | | 615.0006 | Brake lever | 1 | |
| 17 | | 660.0011 | Wheel hub | 1 | |
| 18 | | 715.0014 | Brake lever pin | 1 | |
| 19 | | 735.0091 | Sun gear | 1 | |
| 20 | | 735.0092 | Pinion | 1 | |
| 21 | | 740.0035 | Brake piston | 1 | |
| 22 | | 750.0011 | Planetary carrier | 1 | |

图3/Fig. 3 变速箱/ Transmission

R2B18-Li R2B25-Li

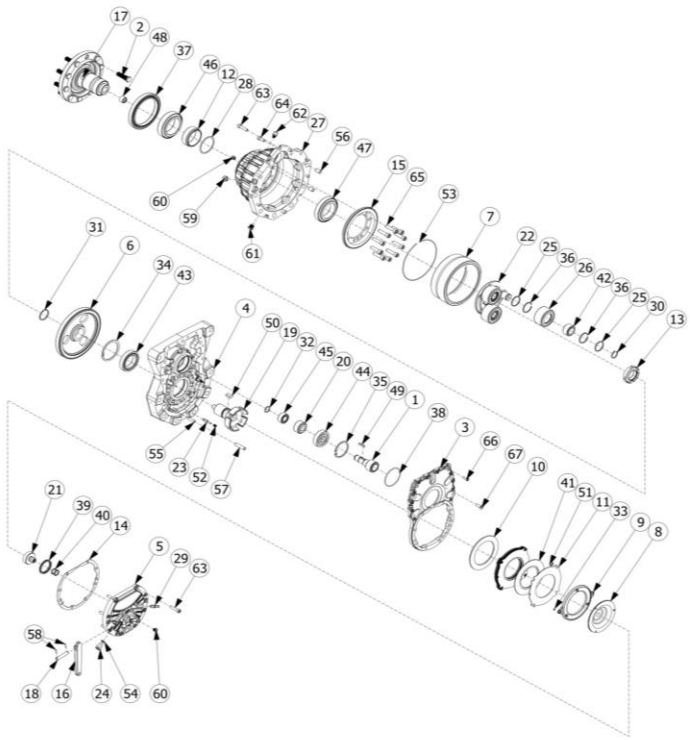


| 序号 | 物料号 | 代号 | 名称 | 数量 | 备注 |
|---|---|---|---|---|---|
| Item No. | ID. | Part No. | Description | Q' ty | Remark |
| 23 | | 770.0006 | Brake pin | 2 | |
| 24 | | 796.0003 | Service brake connection | 1 | |
| 25 | | 800.0020 | Washer | 6 | |
| 26 | | 835.0095 | Planet gear | 3 | |
| 27 | | 840.0049 | Gearbox housing | 1 | |
| 28 | | 875.0027 | Shims | 1 | |
| 29 | | 980.0006 | Bleeder valve | 1 | |
| 30 | | AE0.0008 | Snap ring for shaft UNI 7435 024 | 3 | |
| 31 | | AE0.0009 | Snap ring for shaft UNI 7435 040 | 1 | |
| 32 | | AE0.0018 | Snap ring for shaft SW 020 | 1 | |
| 33 | | AE0.0044 | Radial ring for shaft UNI7434-3.2 | 2 | |
| 34 | | AE1.0006 | Snap ring for hole UNI 7437 080 | 1 | |
| 35 | | AE1.0010 | Snap ring for hole UNI 7437 062 | 1 | |
| 36 | | AE2.0039 | Elastic ring SB 40 | 6 | |
| 37 | | ATI.0033 | Seal 0110x140x14.5 | 1 | |
| 38 | | AT5.0107 | O-ring OR3275 069.52x2.62 viton | 1 | |
| 39 | | AT9.0039 | Seal 045x54.1x6.3 | 1 | |
| 40 | | AT9.0044 | Seal 018x22.9x2.2 DOT | 2 | |
| 41 | | AUX 0012 | Friction disc | 6 | |
| 42 | | CC1.0011 | Roller bearing | 3 | |
| 43 | | CR1.0026 | Ball bearing | 1 | |
| 44 | | CR2.0002 | Ball bearing | 1 | |
| 45 | | CRU.0004 | Needle roller bearing | 1 | |

图3/Fig. 3 变速箱/ Transmission

R2B18-Li R2B25-Li

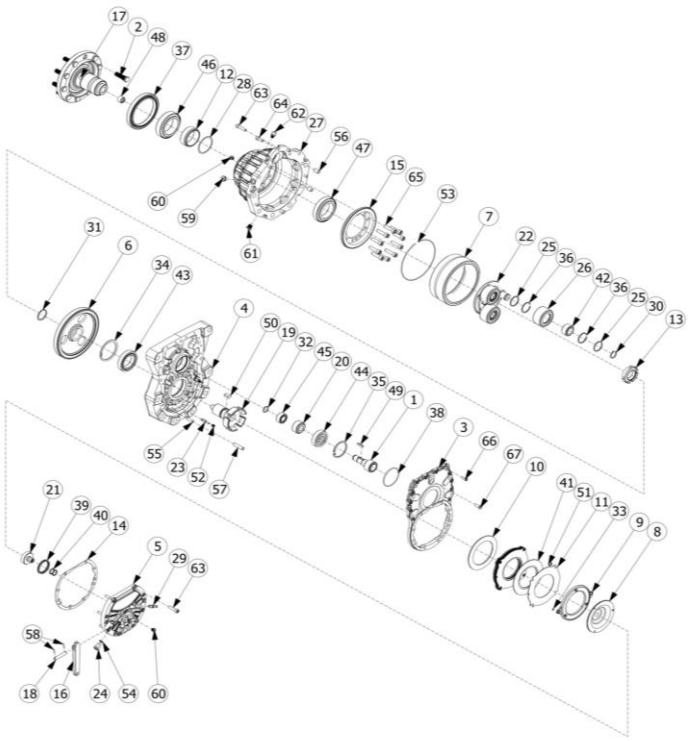


| 序号 | 物料号 | 代号 | 名称 | 数量 | 备注 |
|---|---|---|---|---|---|
| Item No. | ID. | Part No. | Description | Q' ty | Remark |
| 46 | | CUI.0022 | Roller bearing | 1 | |
| 47 | | CUI.0047 | Roller bearing | 1 | |
| 48 | | GUR.0002 | Needle roller cage | 1 | |
| 49 | | LIN.0033 | Fitting key B 6x4x25 | 1 | |
| 50 | | LIN.0037 | Fitting key B 12x8x20 | 1 | |
| 51 | | MOL.0019 | Brake spring | 24 | |
| 52 | | MOL.0021 | Spring | 2 | |
| 53 | | MOL.0025 | Elastic ring | 1 | |
| 54 | | R01.0013 | Washer | 1 | |
| 55 | | SP1.0001 | Dowel pin 08x30 | 2 | |
| 56 | | SP1.0003 | Dowel pin 012x20 | 5 | |
| 57 | | SP1.0017 | Dowel pin 010x45 | 4 | |
| 58 | | SP4.0004 | Elastic pin 03X16 | 2 | |
| 59 | | TAP.0024 | Plug M 14x1.5 +washer | 3 | |
| 60 | | TAP.0025 | Plug MIOxl+washer | 5 | |
| 61 | | TAP.0045 | Magnetic plug M14xl + washer | 1 | |
| 62 | | TAP,0053 | Breather plug MIOxl + washer | 1 | |
| 63 | | VC1.0018 | Screw SHCS M8x35 12.9 | 12 | |
| 64 | | VC1.0019 | Screw SHCS M8X20 12.9 | 3 | |
| 65 | | VC1.0045 | Screw SHCS M10x40 12.9 | 10 | |
| 66 | | VC1.0065 | Screw SHCS M6X16 12.9 | 12 | |
| 67 | | VT6.0010 | Screw HSCHS UNI5933 M8x25 10.9 | 1 | |
| | | | | | |

图4/Fig. 4 起升电机及安装/ LIFTING MOTOR AND INSTALLATION

R2B18-Li R2B25-Li

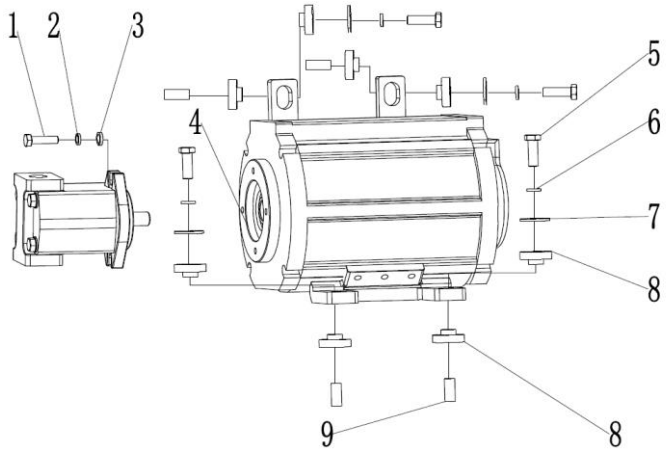


| 序号 | 物料号 | 代号 | 名称 | 数量 | 备注 |
|---|---|---|---|---|---|
| Item No. | ID. | Part No. | Description | Q' ty | Remark |
| 1 | | GB/T5783-M10*35-8.8J | Bolt M10×35 螺栓M10×35 | 2 | |
| 2 | | GB/T93-10 | Washer 10 垫圈10 | 2 | |
| 3 | | GB/T97.1-10 | Washer 10 垫圈10 | 2 | |
| 4 | | RF025-7-1801000-A0 | Lifting motor 起升电机 | 1 | |
| 5 | | GB/T5783-M8*50-8.8J | Bolt M8×50 螺栓M8×50 | 4 | |
| 6 | | GB/T93-8 | Washer 8 垫圈8 | 4 | |
| 7 | | RF025-7-1800003-A0 | Washer 平垫 | 4 | |
| 8 | | RF025-7-1800001-A0 | Damping rubber pad 减震橡胶垫 | 8 | |
| 9 | | RF025-7-1800002-A0 | Spacer sleeve 隔套 | 4 | |

图5/Fig. 5　　电气系统/ ELECTRICAL SYSTEM

R2B18-Li R2B25-Li

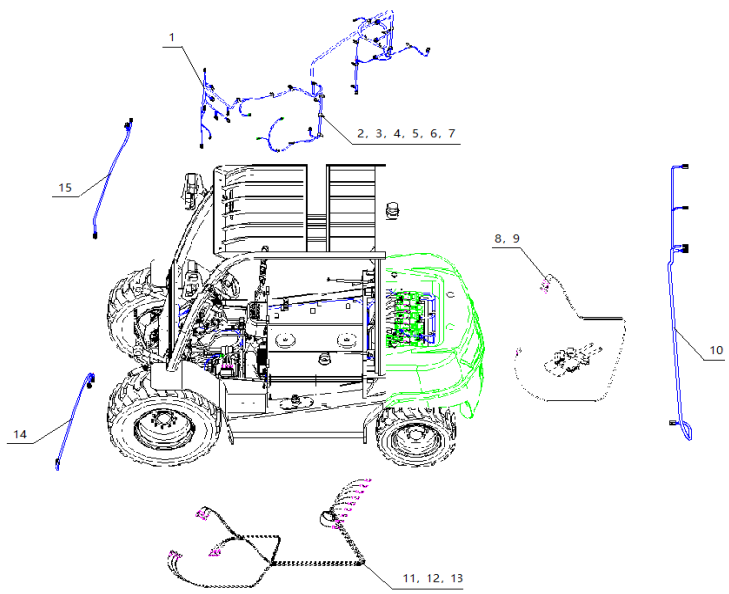


| 序号 | 物料号 | 代号 | 名称 | 数量 | 备注 |
|---|---|---|---|---|---|
| Item No. | ID. | Part No. | Description | Q' ty | Remark |
| 1 | | RF025-7-2400000-A0 | Electrical 电气系统 | 1 | |
| 2 | | RF025-7-2401100-A0 | Main wire harness 主线束 | 1 | |
| 3 | | FLT-R25 | Harness clamp Φ25 线夹 Φ25 | 10 | |
| 4 | | FLT-R18 | Harness clamp Φ18 线夹 Φ18 | 7 | |
| 5 | | FLT-R12 | Harness clamp Φ12 线夹 Φ12 | 3 | |
| 6 | | GB/T5783-2000 | Bolt M6×12 螺栓 M6×12 | 20 | |
| 7 | | GB/T97.1-2002 | Washer 6 垫圈 6 | 20 | |
| 8 | | GB/T93-1987 | Washer 6 垫圈 6 | 20 | |
| 9 | | RF025-7-2405100-A0-1 | Power Cable 电源电缆 | 1 | |
| 10 | | RF025-7-2405100-A0-2 | Power Cable 电源电缆 | 1 | |
| 11 | | RF035-4-2404100-A0 | Back light harness 尾灯线束 | 1 | |
| 12 | | RF025-7-2402100-A0 | Pump Motor Cable 油泵电机电缆 | 3 | |
| 13 | | RF025-7-2403100-A0 | Left Traction Motor Cable 左牵引电机电缆 | 3 | |
| 14 | | RF025-7-2404100-A0 | Right Traction Motor Cable 右牵引电机电缆 | 3 | |
| 15 | | RF035-4-2402100-A0 | Front light harness (Left) 左前灯线束 | 1 | |
| 16 | | RF035-4-2403100-A0 | Front light harness (Right) 右前灯线束 | 1 | |
| | | | | | |
| | | | | | |
| | | | | | |
| | | | | | |
| | | | | | |
| | | | | | |
| | | | | | |

图6/Fig. 6 电气系统/ ELECTRICAL SYSTEM

R2B18-Li R2B25-Li

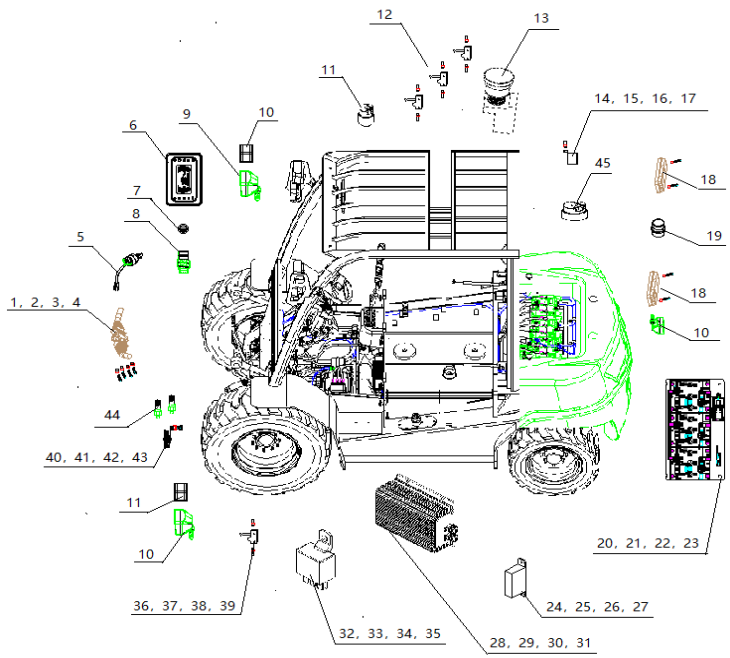


| 序号 Item No. | 物料号 ID. | 代号 Part No. | 名称 Description | 数量 Q' ty | 备注 Remark |
|---|---|---|---|---|---|
| 1 | | RF025-7-2408400-A0 | Shift&Light Lever 组合开关 | 1 | |
| 2 | | GB/T818-2000 | Screw M6×12 螺钉 M6×12 | 14 | |
| 3 | | GB/T97.1-2002 | Washer 6 垫圈 6 | 14 | |
| 4 | | GB/T93-1987 | Washer 6 垫圈 6 | 14 | |
| 5 | | RF025-7-2410500-A0 | Key switch 钥匙开关 | 1 | |
| 6 | | RF025-7-2410100-A0 | Display Combination 仪表总成 | 1 | |
| 7 | | RF025-7-2410400-A0 | USB Outlet USB插座 | 1 | |
| 8 | | RF025-7-2408100-A0 | Rocker Switch Assembly 翘板开关组 | 1 | |
| 9 | | RF035-4-2407100-A0 | Working Lamp 大灯 | 3 | |
| 10 | | RF035-4-2407200-A0 | Combination Light 组合灯 | 2 | |
| 11 | | RF025-7-2411100-A0 | Lifting Pot 起升电位器 | 1 | |
| 12 | | RF025-7-2410300-A0 | Valve Switch 多路阀开关 | 1 | |
| 13 | | RF025-7-2410600-A0 | Emergency Switch 急停开关 | 1 | |
| 14 | | RF035-4-2409400-A0 | Reverse Buzzer 倒车蜂鸣器 | 1 | |
| 15 | | GB/T5783-2000 | Bolt M8×16 螺栓 M8×16 | 1 | |
| 16 | | GB/T97.1-2002 | Washer 8 垫圈 8 | 1 | |
| 17 | | GB/T93-1987 | Washer 8 垫圈 8 | 1 | |
| 18 | | RF035-4-2407300-A0 | Reverse Combination Light 三色尾灯 | 2 | |
| 19 | | RF035-4-2407400-A0 | Flash Light 警示灯 | 1 | |
| 20 | | RF025-7-2410200-A0 | Controller 控制器组 | 1 | |
| 21 | | GB/T5783-2000 | Bolt M12×25 螺栓 M12×25 | 4 | |
| 22 | | GB/T97.1-2002 | Washer 12 垫圈 12 | 4 | |
| 23 | | GB/T93-1987 | Washer 12 垫圈 12 | 4 | |

图6/Fig.6 电气系统/ ELECTRICAL SYSTEM

R2B18-Li R2B25-Li

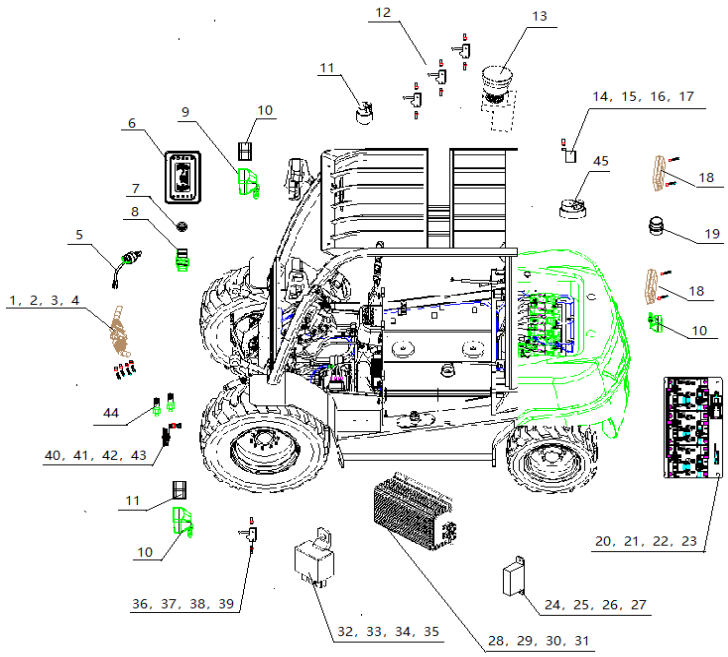


| 序号 Item No. | 物料号 ID. | 代号 Part No. | 名称 Description | 数量 Q' ty | 备注 Remark |
|---|---|---|---|---|---|
| 24 | | RF025-7-2410200-A0 | Fuse Box 保险丝盒 | 1 | |
| 25 | | GB/T5783-2000 | Bolt M6×15 螺栓 M6×15 | 2 | |
| 26 | | GB/T97.1-2002 | Washer 6 垫圈 6 | 2 | |
| 27 | | GB/T93-1987 | Washer 6 垫圈 6 | 2 | |
| 28 | | RF025-7-2410800-A0 | DC-DC 开关电源 | 1 | |
| 29 | | GB/T5783-2000 | Bolt M6×15 螺栓 M6×15 | 4 | |
| 30 | | GB/T97.1-2002 | Washer 6 垫圈 6 | 4 | |
| 31 | | GB/T93-1987 | Washer 6 垫圈 6 | 4 | |
| 32 | | RF025-7-2410700-A0 | Flasher 闪光器 | 1 | |
| 33 | | GB/T5783-2000 | Bolt M6×15 螺栓 M6×15 | 2 | |
| 34 | | GB/T97.1-2002 | Washer 6 垫圈 6 | 2 | |
| 35 | | GB/T93-1987 | Washer 6 垫圈 6 | 2 | |
| 36 | | RF035-4-2408500-A0 | Handbrake Switch 手刹开关 | 1 | |
| 37 | | GB/T818-2000 | Screw M4×10 螺钉 M4×10 | 2 | |
| 38 | | GB/T97.1-2002 | Washer 4 垫圈 4 | 2 | |
| 39 | | GB/T93-1987 | Washer 4 垫圈 4 | 2 | |
| 40 | | RF035-4-2409300-A0 | Horn 喇叭 | 1 | |
| 41 | | GB/T5783-2000 | Bolt M8×16 螺栓 M8×16 | 1 | |
| 42 | | GB/T97.1-2002 | Washer 8 垫圈 8 | 1 | |
| 43 | | GB/T93-1987 | Washer 8 垫圈 8 | 1 | |
| 44 | | RF025-7-2408300-A0 | Brake Switch 刹车开关 | 2 | |
| 45 | | RF025-7-2411200-A0 | Steering POT 转角电位器 | 1 | |
| | | | | | |

图7/Fig. 7　　电气系统/ ELECTRICAL SYSTEM

R2B18-Li R2B25-Li

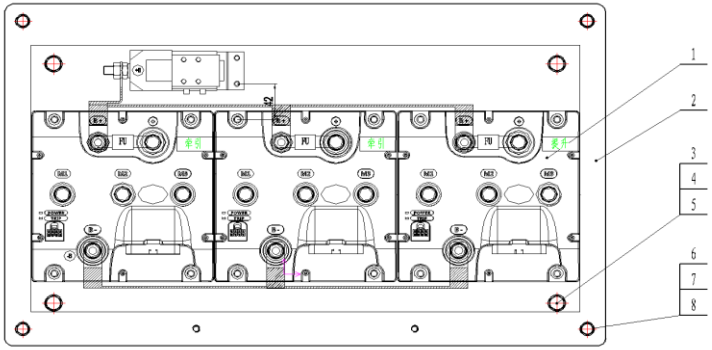


| 序号 | 物料号 | 代号 | 名称 | 数量 | 备注 |
|---|---|---|---|---|---|
| Item No. | ID. | Part No. | Description | Q' ty | Remark |
| 1 | | RF025-7-0801000 | Controller 控制器总成 | 1 | |
| 2 | | RF025-7-0800001 | plate 安装板 | 1 | |
| 3 | | GB/T5783-2000 | Bolt M10×25 螺栓 M10×25 | 4 | |
| 4 | | GB/T93-1987 | Washer 10 垫圈 10 | 4 | |
| 5 | | GB/T97.1-2002 | Washer 10 垫圈 10 | 4 | |
| 6 | | GB/T5783-2000 | Bolt M8×25 螺栓M8×25 | 4 | |
| 7 | | GB/T93-1987 | Washer 8 垫圈8 | 4 | |
| 8 | | GB/T97.1-2002 | Washer 8 垫圈8 | 4 | |

图8/Fig. 8 加速器及安装/ACCELERATOR AND INSTALLATION

R2B18-Li R2B25-Li

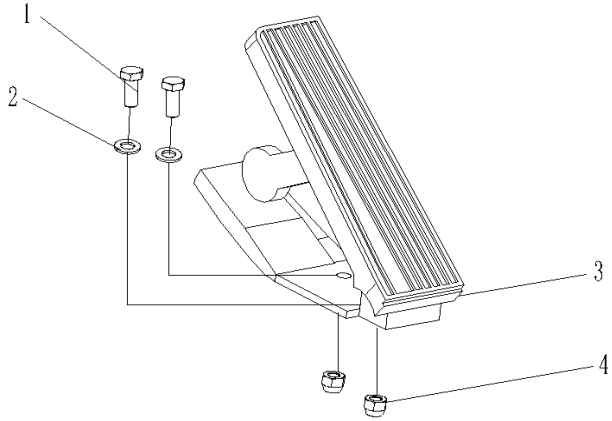


| 序号 Item No. | 物料号 ID. | 代号 Part No. | 名称 Description | 数量 Q' ty | 备注 Remark |
|---|---|---|---|---|---|
| 1 | | GB/T5783-2000 | Bolt M8×20 螺栓M8×20 | 2 | |
| 2 | | GB/T97.1-8 | Washer 8 垫圈8 | 2 | |
| 3 | | RF025-7-2501000-A0 | Accelerator 加速器 | 1 | |
| 4 | | GB/T889.1-M8-8J | Nut M8 锁紧螺母M8 | 2 | |

图9/Fig. 9　　前轮总成/ FRONT WHEEL ASSEMBLY

R2B18-Li R2B25-Li

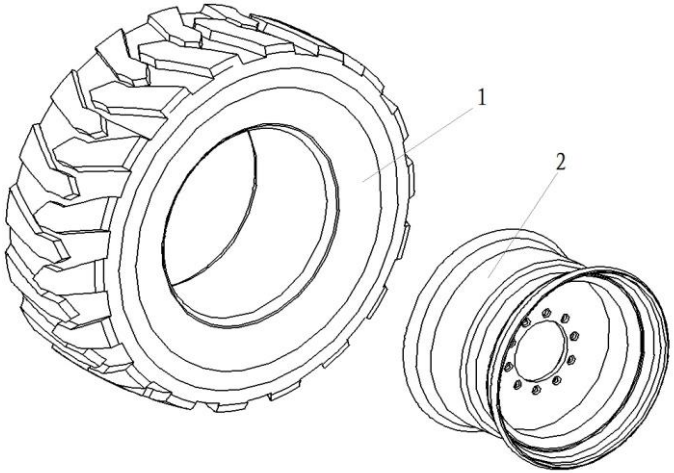


| 序号 | 物料号 | 代号 | 名称 | 数量 | |
|---|---|---|---|---|---|
| Item No. | ID. | Part No. | Description | Q' ty | |
| 1 | | RF025-2-3302000-A0 | Tyre 轮胎总成 | 2 | |
| 2 | | RF025-2-3301000-A0 | Rim 轮辋总成 | 2 | |

图10/Fig. 10 转向装置及安装/ STEERING DEVICE AND INSTALLATION

R2B18-Li R2B25-Li

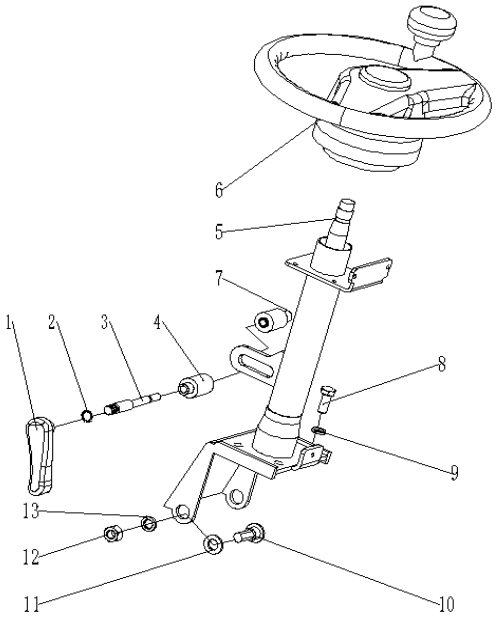


| 序号 | 物料号 | 代号 | 名称 | 数量 | |
|---|---|---|---|---|---|
| Item No. | ID. | Part No. | Description | Q' ty | |
| 1 | | RF025-7-4202000-A0 | Locking handle 锁紧手柄 | 1 | |
| 2 | | RF025-7-4200006-A0 | Buckle 卡扣 | 1 | |
| 3 | | RF025-7-4200005-A0 | Shaft 轴 | 1 | |
| 4 | | RF025-7-4200004-A0 | Cushion 垫块 | 1 | |
| 5 | | RF025-7-4201000-A0 | Steering column 转向管柱总成 | 1 | |
| 6 | | RF025-7-4203000-A0 | Steering wheel 方向盘总成300 | 2 | |
| 7 | | RF025-7-4200001-A0 | Locking piece 锁紧块 | 1 | |
| 8 | | GB/T5783-M10*20-8.8J | Bolt M10×20 螺栓M10×20 | 4 | |
| 9 | | GB/T93-10 | Washer 10 垫圈10 | 4 | |
| 10 | | RF025-7-4200003-A0 | Bolt 螺栓 | 2 | |
| 11 | | RF025-7-4200002-A0 | Bushing 衬套 | 2 | |
| 12 | | GB/T6170-M12 | Nut M12 螺母M12 | 2 | |
| 13 | | GB/T93-12 | Washer 12 垫圈12 | 2 | |

**图11/FIG.11.** **转向桥及安装/STEERING AXLE MOUNT**

R2B18-Li R2B25-Li

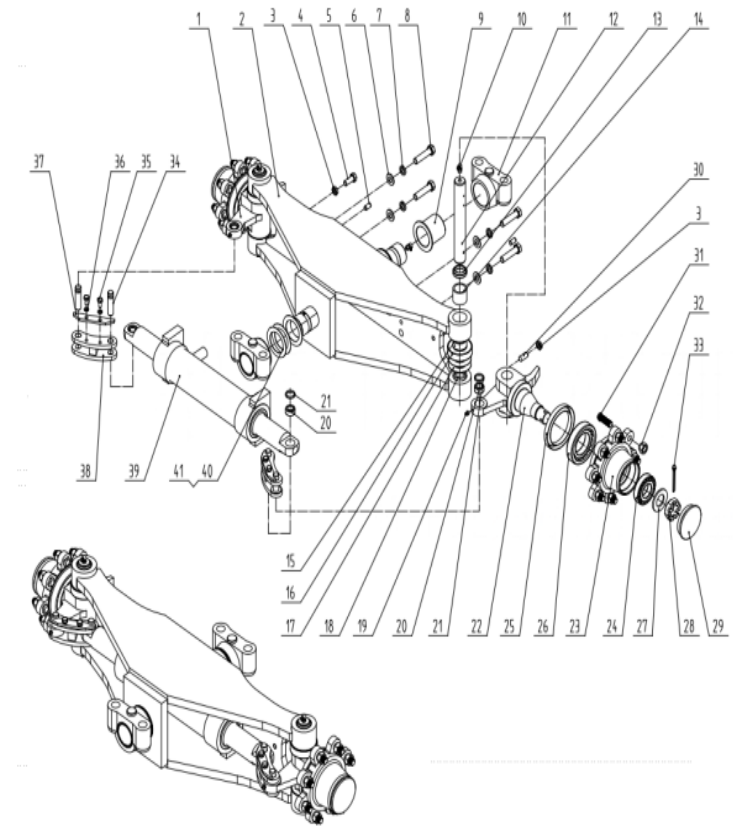


| 序号 | | 代号 | 名称 | 数量 | 备注 |
|---|---|---|---|---|---|
| Item No. | | Part No. | Descripition | Q’ty | Remark |
| 01 | | H24C4-32171 | Left knuckle assembly 左转向节总成 | 1 | |
| 02 | | 35B43-01100 | Steering bridge assembly 转向桥体总成 | 1 | |
| 03 | | B4133-00012B | Nut M12 螺母M12 | 4 | 白锌 |
| 04 | | B0330-12045 | Bolt M12×45 螺栓M12x45 | 2 | |
| 05 | | B3130-10020 | Pin 10×20 圆柱销φ10X20 | 1 | |
| 06 | | B5313-00014 | Washer 14 平垫14 | 4 | |
| 07 | | B5050-00014B | Washer 14 弹垫14 | 4 | 白锌 |
| 08 | | B0330-14045B | Bolt M14×45 螺栓M14x45 | 4 | 白锌 |
| 09 | | A21B4-32181B | bushing 衬套 | 2 | |
| 10 | | Q701B90 | Sleeve bending neck grease lip 90° 弯颈式滑酯嘴Z1/8 | 6 | |
| 11 | | A21B4-32171 | Rear axle support 后桥支座 | 2 | |
| 12 | | A21B4-32222 | Knuckle kingpin 转向节主销 | 2 | |
| 13 | | 23654-32081 | Oil seal ring 32x40x7 油封φ32xφ40x7 | 4 | |
| 14 | | Z-943/32 | Needle roller bearings 滚针轴承32x40x32 | 4 | |
| 15 | | A21B4-12001 | bushing 衬套 | 2 | |
| 16 | | Z-198908K | Thrust ball bearings 单向推力球轴承198908K | 2 | |
| 17 | | 22214-30321 | Adgusting mats φ32.5xφ65x0.2 调整垫φ32.5xφ65x0.2 | 2组 | |
| 18 | | 23654-32161 | O-ring 31.8×4.8 O型圈φ31.8xφ4.8 | 2 | |
| 19 | | Q700B06 | Straight grease mouth M6 直通式滑酯嘴M6 | 4 | |
| 20 | | Z-GE16ES | Padial joint bearings GE16ES 向心关节轴承GE16ES | 4 | |
| 21 | | H24C4-12003 | bushing 衬套 | 4 | |
| 22 | | H24C4-32181 | Right knuckle assembly 右转向节总成 | 1 | |
| 23 | | A21B4-32241 | Wheel hub 轮毂 | 2 | |
| 24 | | Z-30207 | Tapered roller bearing 30207 圆锥滚子轴承30207 | 2 | |
| 25 | | Z6301-08524 | Oil seal ring 85x110x12D 油封B85x110x12D | 2 | |

**图11/FIG.11.** **转向桥及安装/STEERING AXLE MOUNT**

R2B18-Li R2B25-Li

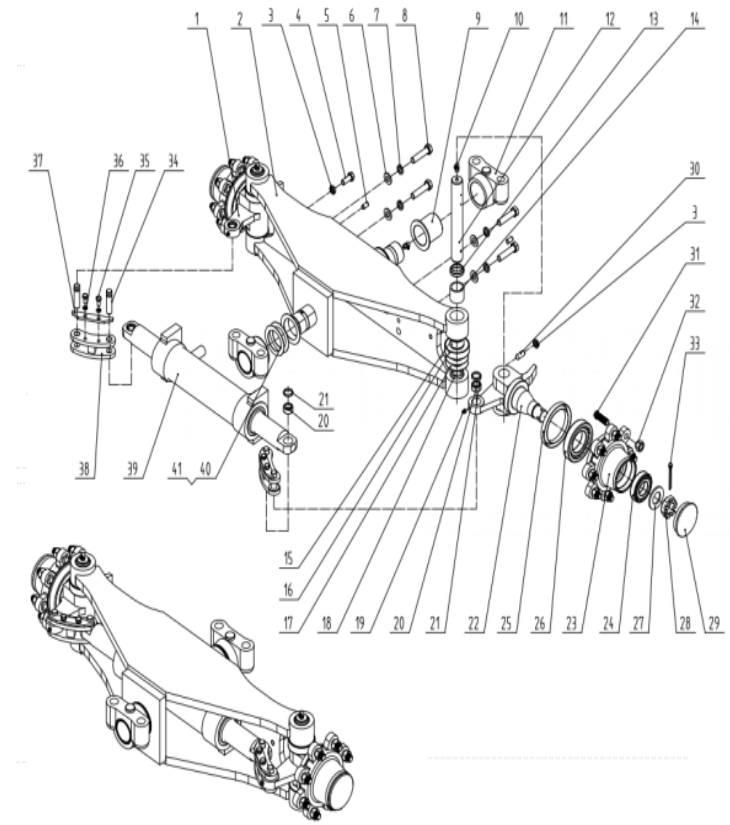


| 序号 | | 代号 | 名称 | 数量 | 备注 |
|---|---|---|---|---|---|
| Item No. | | Part No. | Descripition | Q’ty | Remark |
| 26 | | Z-30211 | Tapered roller bearing 30211 圆锥滚子轴承30211 | 2 | |
| 27 | | G27Z4-30711 | Washer φ31xφ62x4 垫圈φ31xφ62x4 | 2 | |
| 28 | | A21B4-32311 | Nut M30x2 开槽螺母M30x2 | 2 | |
| 29 | | 1218-10200 | Hubcaps 轮毂盖 | 2 | |
| 30 | | B8050-12030B | Bolt M12×30 内六角紧定螺钉M12x30 | 2 | 白锌 |
| 31 | | 23654-32041B | Wheel hub bolt 轮毂螺栓 | 16 | 白锌 |
| 32 | | 23654-34051B | Wheel hub Nut 轮毂螺母 | 16 | 白锌 |
| 33 | | B3010-6P350 | Pin 6.3×50 开口销B6.3×50 | 2 | |
| 34 | | A21B4-32261AB | Connecting rod pin 连杆销 | 4 | 白锌 |
| 35 | | B0330-08016B | Bolt M8×16 螺栓M8x16 | 4 | 白锌 |
| 36 | | B5050-00008B | Washer 8 弹垫8 | 4 | 白锌 |
| 37 | | A21B4-32300B | Baffle 挡板 | 2 | 白锌 |
| 38 | | A21B4-32081B | Connecting rod 连杆 | 2 | 白锌 |
| 39 | | 35B43-01200 | Steering cylinder saaembly 转向油缸总成 | 1 | |
| 40 | | A21B4-32291 | Washer δ0.5x53x76 垫片δ0.5x53x76 | 4 | |
| 41 | | A21B4-32301 | Washer δ2x53x76 垫片δ2x53x76 | 2 | |
| | | | | | |
| | | | | | |
| | | | | | |
| | | | | | |
| | | | | | |
| | | | | | |
| | | | | | |
| | | | | | |
| | | | | | |

图12/Fig. 12 后轮总成/Rear-wheel assembly

R2B18-Li R2B25-Li

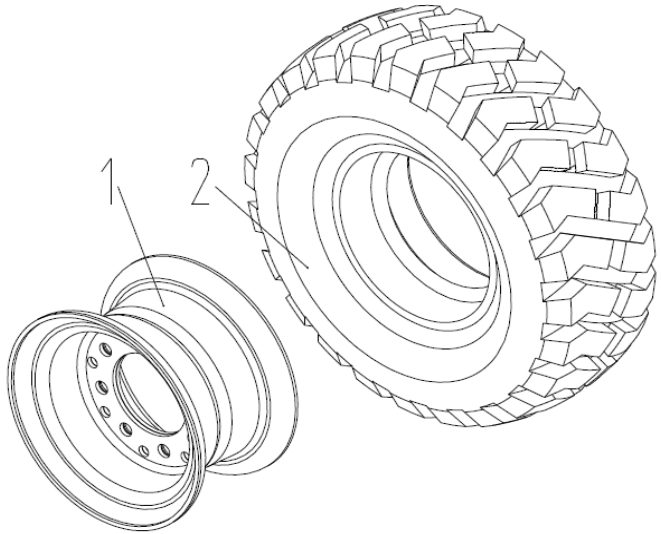


| 序号 | 物料号 | 代号 | 名称 | 数量 | 备注 |
|---|---|---|---|---|---|
| Item No. | ID. | Part No. | Description | Q' ty | Remark |
| 1 | | RF035-2-4401000-A0 | Rim ass'y(8.00G) 轮辋总成(8.00G) | 2 | |
| 2 | | RF025-7-4402000-A0 | Tyre ass'y(23×10-12-12PR) 轮胎总成(23×10-12-12PR) | 2 | |

图13/Fig. 13　　护顶架及安装/ OVERHEAD GUARD ASS'Y

R2B18-Li R2B25-Li

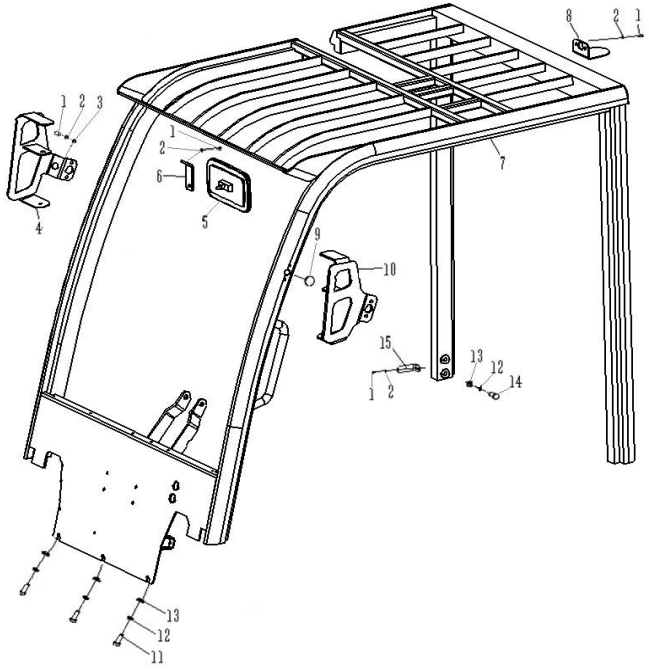


| 序号 | 物料号 | 代号 | 名称 | 数量 | 备注 |
|---|---|---|---|---|---|
| Item No. | ID. | Part No. | Description | Q' ty | Remark |
| 1 | | GB/T5783-M8*16-8.8J | Bolt M8×16　螺栓M8×16 | 11 | |
| 2 | | GB/T93-1987 | Washer 8　垫圈8 | 11 | |
| 3 | | GB/T97.1-2002 | Washer 8　垫圈8 | 11 | |
| 4 | | RF035-4-5103000-A0 | Right lamp holder　右灯架 | 1 | |
| 5 | | RF035-4-5104000-A0 | Rearview mirror　后视镜总成 | 1 | |
| 6 | | RF035-4-5100002-A0 | Rearview mirror bracket　后视镜支架 | 1 | |
| 7 | | RF025-7-5101000-A0 | Top shelf　护顶架 | 1 | |
| 8 | | RF035-4-5100001-A0 | Warning lamp holder　警示灯座 | 1 | |
| 9 | | RF035-4-5100003-A0 | Rubber stopper　橡胶塞 | 2 | |
| 10 | | RF035-4-5102000-A0 | The left lamp holder　左灯架 | 1 | |
| 11 | | GB/T5783-M12*25-8.8J | Bolt M12×25　螺栓M12×25 | 8 | |
| 12 | | GB/T93-12 | Washer 12　垫圈12 | 8 | |
| 13 | | GB/T97.1-12 | Washer 12　垫圈12 | 3 | |
| 14 | | GB/T5783-M12*35-8.8J | Bolt M12×20　螺栓M12×35 | 2 | |
| 15 | | RF025-7-6400016-A0 | Fixed plate-Black　侧板固定板-黑色 | 2 | |

图14/Fig. 14 手制动操纵/ HAND BRAKE CONTROL

R2B18-Li R2B25-Li

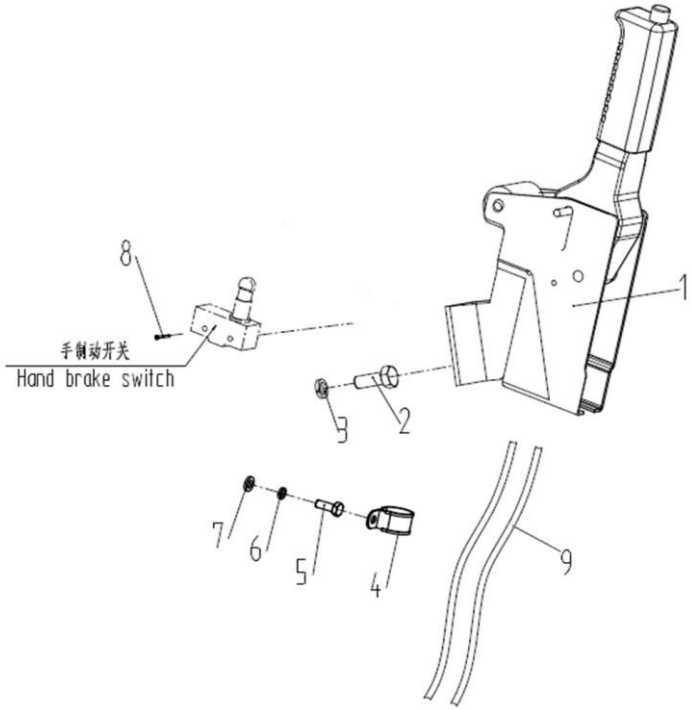


| 序号 | 物料号 | 代号 | 名称 | 数量 | 备注 |
|---|---|---|---|---|---|
| Item No. | ID. | Part No. | Description | Q' ty | Remark |
| 1 | | RF035-4-5501000-A0 | Hand braking 手制动总成 | 1 | |
| 2 | | GB/T5783-M10*25-8.8J | Hexagon bolt M10×25 六角螺栓M10×25 | 2 | |
| 3 | | GB/T93-10 | Washer 10 垫圈10 | 2 | |
| 4 | | RF035-4-5500001-A0 | Cable clamp 拉线夹 | 1 | |
| 5 | | GB/T5783-M6*16-8.8J | Bolt M6×16 螺栓M6×16 | 1 | |
| 6 | | GB/T93-6 | Washer 6 垫圈6 | 1 | |
| 7 | | GB/T97.1-6 | Washer 6 垫圈6 | 1 | |
| 8 | | GB/T5786-M14*1.5*45-8.8J | Bolt M4×10 螺钉M4×10 | 2 | |
| 9 | | | | | |

图15/Fig. 15　　脚制动操纵/ FOOT BRAKE CONTROL

R2B18-Li R2B25-Li

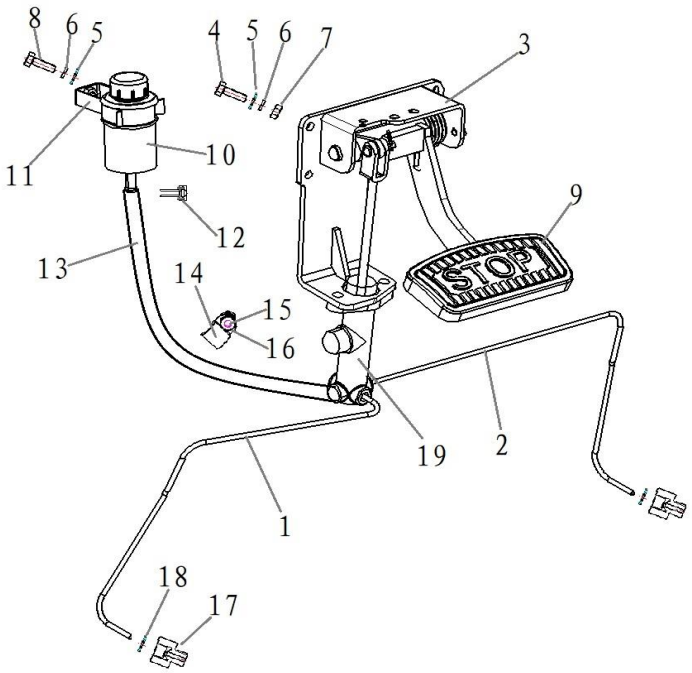


| 序号 | 物料号 | 代号 | 名称 | 数量 | 备注 |
|---|---|---|---|---|---|
| Item No. | ID. | Part No. | Description | Q' ty | Remark |
| 1 | | RF025-7-5701000-A0 | Brake tube left 制动管左 | 1 | |
| 2 | | RF025-7-5702000-A0 | Brake tube right 制动管右 | 1 | |
| 3 | | RF025-7-5703000-A0 | Foot brake 脚制动 | 1 | |
| 4 | | GB/T5783-M8*25-8.8J | Bolt M8×25 螺栓M8×25 | 4 | |
| 5 | | GB/T97.1-8 | Washer 8 垫圈8 | 5 | |
| 6 | | GB/T93-8 | Washer 8 垫圈8 | 5 | |
| 7 | | GB/T6170-M10-8J | Nut 8 螺母M8 | 4 | |
| 8 | | GB/T5783-M8*25-8.8J | Bolt M8×20 螺栓M8×20 | 1 | |
| 9 | | RF025-7-5700001-A0 | Pedal pad 踏板垫 | 1 | |
| 10 | | RF035-4-5802000-A0 | Oil tank 储油罐 | 1 | |
| 11 | | RF035-4-5801000-A0 | Oil storage tank 制动液罐座 | 1 | |
| 12 | | JB/T8870-10-16 | Hoop 10-16 喉箍Φ10-16 | 2 | |
| 13 | | RF035-4-5800001-A0 | Flexible brake hose 制动液软管 | 1 | |
| 14 | | GMS-DJRX | Pipe clamp 9.5 管夹9.5 | 1 | |
| 15 | | GB/T5783-M6*16-8.8J | Bolt M6×16 螺栓M6×16 | 1 | |
| 16 | | GB/T93-6 | Washer 6 垫圈6 | 1 | |
| 17 | | RF025-7-5700002-A0 | 分泵接头 分泵接头 | 2 | |
| 18 | | JB982-1977 | 组合密封垫圈 10 组合密封垫圈 10 | 2 | |
| 19 | | RF025-7-5703400-A0 | Brake pump 制动泵 | 1 | |
| | | | | | |
| | | | | | |
| | | | | | |
| | | | | | |

图16/Fig. 16　　车架/ CHASSIS BODY

R2B18-Li R2B25-Li

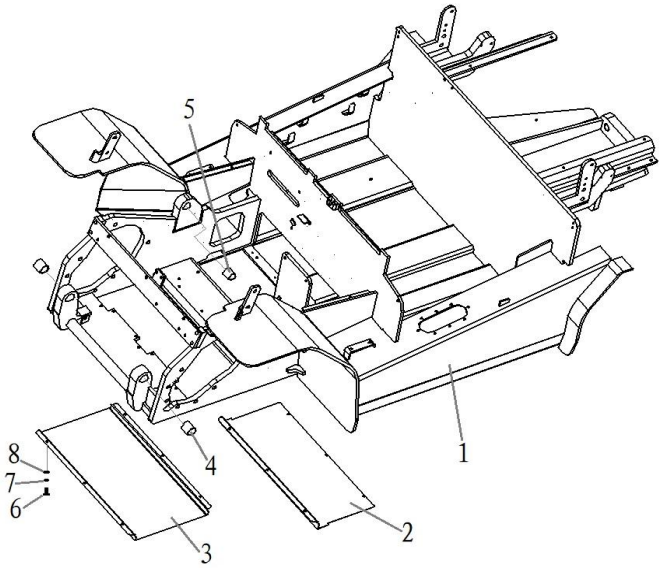


| 序号 | 物料号 | 代号 | 名称 | 数量 | 备注 |
|---|---|---|---|---|---|
| Item No. | ID. | Part No. | Description | Q' ty | Remark |
| 1 | | RF025-7-6100000-A0 | Frame 车架 | 1 | |
| 2 | | RF025-7-6400018-A0 | Cover board 后封板 | 1 | |
| 3 | | RF025-7-6400017-A0 | Cover board 前封板 | 1 | |
| 4 | | SF-1 3540 | Self-lubricating bearings 钢背轴承 | 2 | |
| 5 | | SF-1 3035 | Self-lubricating bearings 钢背轴承 | 2 | |
| 6 | | GB/T5783-M8*16-8.8J | Bolt M8×16 螺栓M8×16 | 12 | |
| 7 | | GB/T97.1-8 | Washer 8 垫圈8 | 12 | |
| 8 | | GB/T93-8 | Washer 8 垫圈8 | 12 | |

图17/Fig. 17　　平衡重/ COUNTER WEIGHT

R2B18-Li R2B25-Li

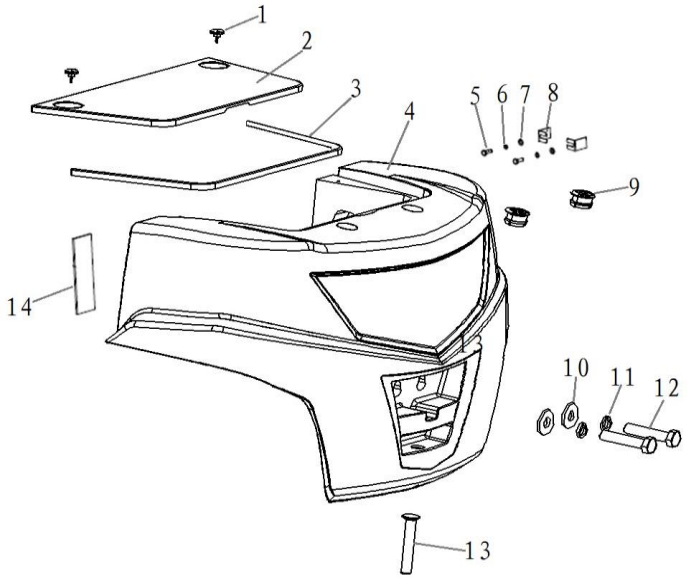


| 序号 | 物料号 | 代号 | 名称 | 数量 | 备注 |
|---|---|---|---|---|---|
| Item No. | ID. | Part No. | Description | Q' ty | Remark |
| 1 | | JB/T7274.4-1994 | Star shaped handle M8×16 星形把手M8×16 | 2 | |
| 2 | | RF025-7-6400023-A0 | Electronic control board 电控盖板 | 1 | |
| 3 | | RF025-7-6400024-A0 | Weatherstrip 密封条 | 2 | |
| 4 | | RF025-7-6300001-B0 | Counter weight 平衡重 | 1 | R2B25-Li |
| - | | RF018-7-6300001-A0 | Counter weight 平衡重 | 1 | R2B18-Li |
| 5 | | GB/T5783-M8*20-8.8J | Bolt M8×20 螺栓M8×20 | 2 | |
| 6 | | GB/T93-8 | Washer 8 垫圈8 | 2 | |
| 7 | | GB/T97.1-8 | Washer 8 垫圈8 | 2 | |
| 8 | | RF035-4-6300004-A0 | Adjusting 调整垫 | 0-4 | |
| 9 | | RF035-4-6300003-A0 | Cap 可吊装孔塞子 | 2 | |
| 9 | | RF035-4-6300005-A0 | Flat washer 平垫片 | 1 | |
| 10 | | GB/T93-30 | Washer 30 垫圈30 | 1 | |
| 11 | | GB/T5782-M30*150-8.8J | Bolt M30×150 螺栓M30×150 | 1 | |
| 12 | | RF035-4-6300006-A0 | Traction pin 牵引栓 | 1 | |
| 13 | | RF035-4-6300007-A0 | Seal strip 海绵密封条 | 2 | |

图18/Fig. 18 仪表架及机罩安装/ DISPLAY BRACKET AND HOOD INSTALLATION

R2B18-Li R2B25-Li

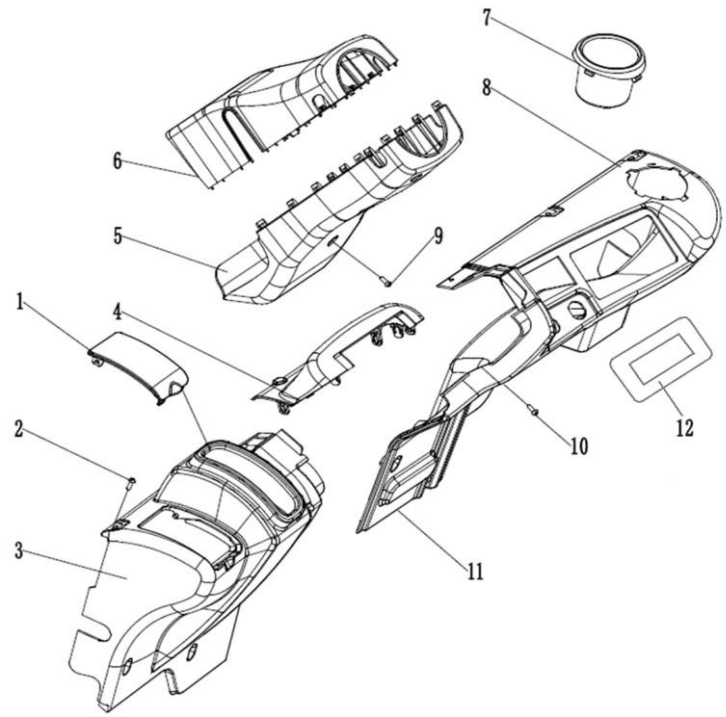


| 序号 Item No. | 物料号 ID. | 代号 Part No. | 名称 Description | 数量 Q' ty | 备注 Remark |
|---|---|---|---|---|---|
| 1 | | RF025-7-6400001-A0 | Clamshell 翻盖 | 1 | |
| 2 | | GB/T823-M6*16-4.8J | Bolt M6×16 螺钉M6×16 | 25 | |
| 3 | | RF025-7-6400002-A0 | Left cover 左盖 | 1 | |
| 4 | | RF025-7-6400003-A0 | Front cover 前盖 | 1 | |
| 5 | | RF025-7-6400012-A0 | Rear cover 后盖 | 1 | |
| 6 | | RF025-7-6400005-A0 | Front cover 前罩 | 1 | |
| 7 | | RF025-7-6400008-A0 | Cup 水杯 | 1 | |
| 8 | | RF025-7-6400007-A0 | Right cover 右盖 | 1 | |
| 9 | | GB/T9074.18-5×15 | Bolt M5×15 螺钉M5×15 | 1 | |
| 10 | | GB/T818-M6*8-4.8J | Bolt M6×8 螺钉M6×8 | 2 | |
| 11 | | RF025-7-6400011-A0 | Lower cover 下盖 | 1 | |
| 12 | | RF025-7-6400006-A0 | Display mounting plate 仪表安装板 | 1 | |

图19/Fig. 19 仪表架及机罩安装/ DISPLAY BRACKET AND HOOD INSTALLATION

R2B18-Li R2B25-Li

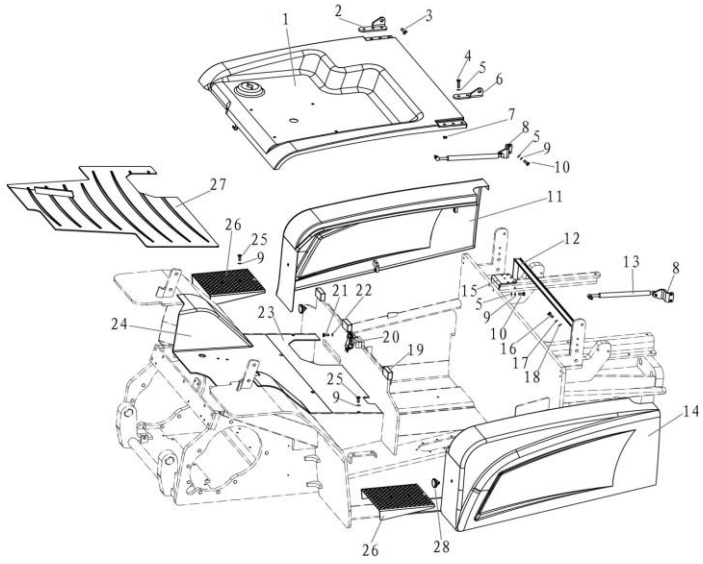


| 序号 | 物料号 | 代号 | 名称 | 数量 | 备注 |
|---|---|---|---|---|---|
| Item No. | ID. | Part No. | Description | Q' ty | Remark |
| 1 | | RF025-7-6405000-A0 | Cell cover 电瓶盖 | 1 | |
| 2 | | RF025-7-6400022-A0 | Lower cover 右铰链 | 1 | |
| 3 | | RF025-7-6400025-A0 | Bolt 固定螺栓 | 2 | |
| 4 | | GB/T5783-M8*30-8.8J | Bolt M8×30 螺栓M8×30 | 6 | |
| 5 | | GB/T97.1-8 | Washer 8 垫圈8 | 12 | |
| 6 | | RF025-7-6400026-A0 | Left hinge 左铰链 | 1 | |
| 7 | | GB/T889.1-M8-8J | Nut M8 螺母M8 | 8 | |
| 8 | | RF025-7-6400014-A0 | Bracket 气弹簧支架 | 2 | |
| 9 | | GB/T93-8 | Washer 8 垫圈8 | 8 | |
| 10 | | GB/T70.3-M8*20-10.9J | Bolt M8×20 螺钉M8×20 | 6 | |
| 11 | | RF025-7-6404000-A0 | Right side plate 右侧板 | 1 | |
| 12 | | RF025-7-6400015-A0 | Waterproof plate 防水槽 | 1 | |
| 13 | | RF025-7-6402000-A0 | Gas spring 气弹簧 | 2 | |
| 14 | | RF025-7-6406000-A0 | Left side plate 左侧板 | 1 | |
| 15 | | RF025-7-1400001-A0 | Bracket 电瓶插头支架 | 1 | |
| 16 | | GB/T5783-M6*12-8.8J | Bolt M6×12 螺栓M6×12 | 4 | |
| 17 | | GB/T93-6 | Washer 6 垫圈6 | 4 | |
| 18 | | GB/T97.1-6 | Washer 6 垫圈6 | 4 | |
| 19 | | RF035-4-6400011-A0 | Rubber pad 橡胶垫 | 3 | |
| 20 | | RF025-7-6401000-A0 | Latch 机罩锁扣 | 1 | |
| 21 | | GB/T818-M5*12-4.8J | Bolt M5×12 螺钉M5×12 | 2 | |
| 22 | | GB/T93-5 | Washer 5 垫圈 5 | 2 | |
| 23 | | RF025-7-6403000-A0 | Rear floor board 后底板 | 1 | |

图19/Fig. 19 仪表架及机罩安装/ DISPLAY BRACKET AND HOOD INSTALLATION

R2B18-Li R2B25-Li

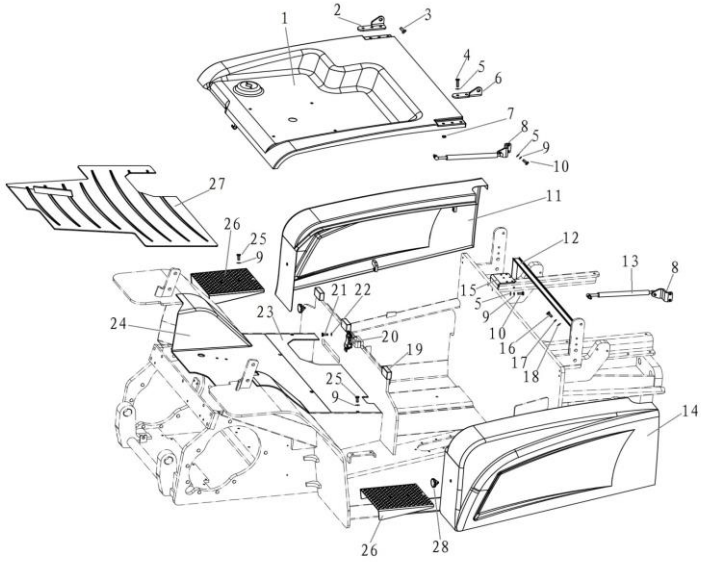


| 序号 | 物料号 | 代号 | 名称 | 数量 | 备注 |
|---|---|---|---|---|---|
| Item No. | ID. | Part No. | Description | Q' ty | Remark |
| 24 | | RF025-7-6400009-A0 | Front floor board 前底板 | 1 | |
| 25 | | GB/T818-M5*16-8.8J | Bolt M8×16 螺钉M8×16 | 4 | |
| 26 | | RF025-7-6400019-A0 | Synovial membrane 踏板 | 2 | |
| 27 | | RF025-7-6400010-A0 | Rubber floor 橡胶底板 | 1 | |
| 28 | | JB/T7274.4-1994 | Star shaped handle M8×16 星形把手M8×16 | 2 | |

图20/Fig. 20　　座椅及安装/ SEAT ASS'Y

R2B18-Li R2B25-Li

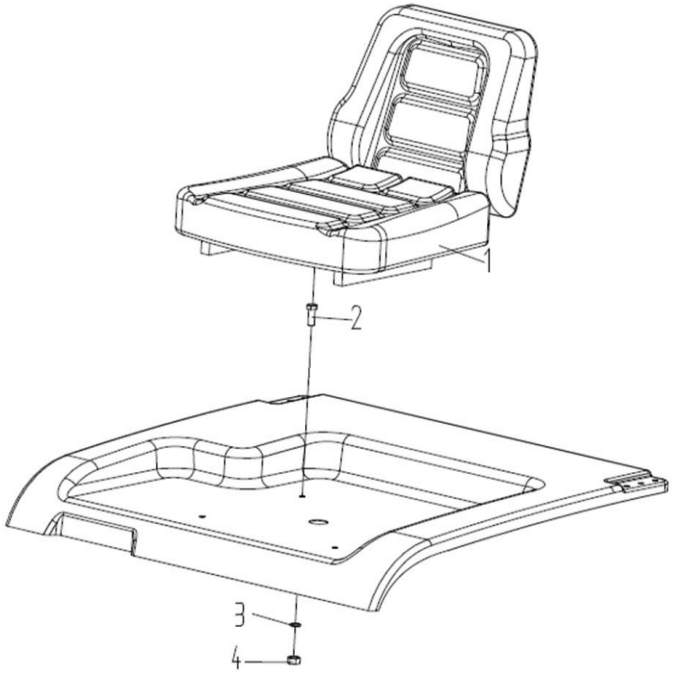


| 序号 | 物料号 | 代号 | 名称 | 数量 | |
|---|---|---|---|---|---|
| Item No. | ID. | Part No. | Description | Q' ty | |
| 1 | | RF035-4-6801000-A0 | Seat 座椅 | 1 | |
| 2 | | GB/T5783-M8*30-8.8J | Bolt M8×30 螺栓M8×30 | 4 | |
| 3 | | GB/T97.1-8 | Washer 8 垫圈8 | 4 | |
| 4 | | GB/T889.1-M8-8J | Nut M8 锁紧螺母M8 | 4 | |

图21/Fig.21 多路阀换向操纵（二联）/ MULTI-WAY VALVE CONTROL（TWO-THROW）

R2B18-Li R2B25-Li

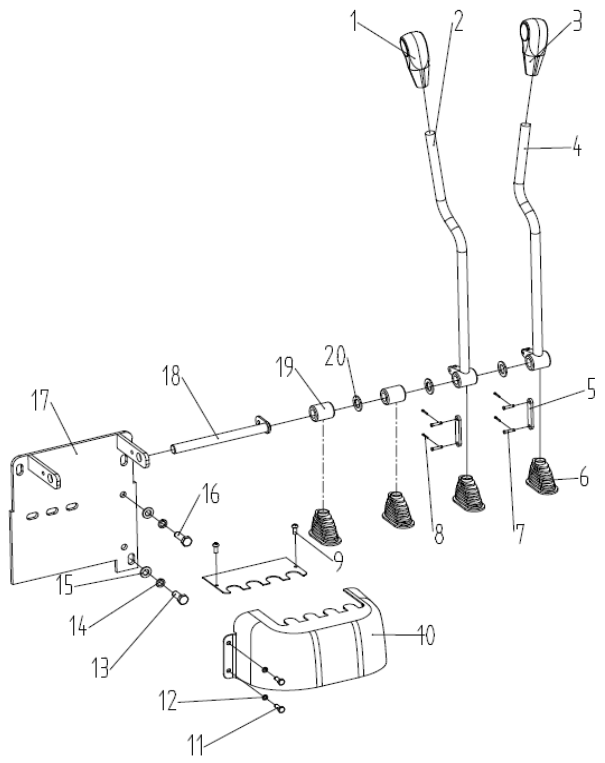


| 序号 | 物料号 | 代号 | 名称 | 数量 | |
|---|---|---|---|---|---|
| Item No. | ID. | Part No. | Description | Q' ty | |
| 1 | | RF025-7-7400004-A0 | Tilt handle 倾斜手柄 | 1 | |
| 2 | | RF025-7-7404000-A0 | Multi valve control lever II 多路阀操纵杆II | 1 | |
| 3 | | RF025-7-7400003-A0 | Lift handle 起升手柄 | 1 | |
| 4 | | RF025-7-7403000-A0 | Multi valve control lever I 多路阀操纵杆I | 1 | |
| 5 | | RF025-7-7400001-A0 | Connecting rod 连杆 | 4 | |
| 6 | | RF025-7-7400002-A0 | Sheath 多路阀护套 | 4 | |
| 7 | | GB/T882-Φ6*18 | Pin shaft Φ6×18 销轴Φ6×18 | 8 | |
| 8 | | GB/T91-2*12 | Cotter pin 2×12 开口销2×12 | 8 | |
| 9 | | GB/T818-M6*16-4.8J | Bolt M6×16 螺钉M6×16 | 2 | |
| 10 | | RF025-7-7402000-A0 | Multi valve cover 多路阀罩 | 1 | |
| 11 | | GB/T5783-M6*12-8.8J | Bolt M6×12 螺栓M6×12 | 5 | |
| 12 | | GB/T93-6 | Washer 6 垫圈6 | 5 | |
| 13 | | GB/T5783-M10*20-8.8J | Bolt M10×20 螺栓M10×20 | 3 | |
| 14 | | GB/T97.1-10 | Washer 10 垫圈10 | 6 | |
| 15 | | GB/T 93-10 | Washer 10 垫圈10 | 6 | |
| 16 | | GB/T5786-M10*1.25*30-8.8J | Bolt M10×1.25×30 螺栓M10×1.25×30 | 3 | |
| 17 | | RF025-7-7401000-A0 | Seat 多路阀安装支座 | 1 | |
| 18 | | RF035-4-7410000-A0 | Pin shaft 多路阀安装支座销轴 | 1 | |
| 19 | | RF025-7-7400007-A0 | Handle sleeve 手柄隔套 | 1 | |
| 20 | | RF035-4-7400008-A0(1MM) | Bushing-1mm 多路阀尼龙衬套-1mm | 按需 | |
| - | | RF035-4-7400008-A0(2MM) | Bushing-2mm 多路阀尼龙衬套-2mm | 按需 | |
| - | | RF035-4-7400008-A0(3MM) | Bushing-3mm 多路阀尼龙衬套-3mm | 按需 | |
| | | | | | |

图22/Fig. 22　　多路阀换向操纵（三联）/ MULTI-WAY VALVE CONTROL（THREE-THROW）

R2B18-Li R2B25-Li

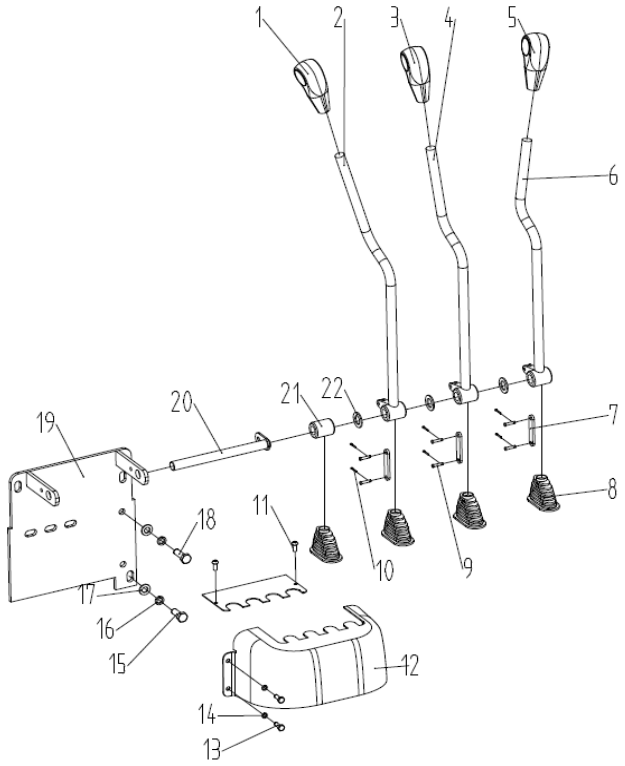


| 序号 Item No. | 物料号 ID. | 代号 Part No. | 名称 Description | 数量 Q' ty | 备注 Remark |
|---|---|---|---|---|---|
| 1 | | RF025-7-7400005-A0 | Handle 属具手柄 | 1 | |
| 2 | | RF025-7-7405000-A0 | Multi valve control lever III 多路阀操纵杆III | 1 | |
| 3 | | RF025-7-7400004-A0 | Tilt handle 倾斜手柄 | 1 | |
| 4 | | RF025-7-7404000-A0 | Multi valve control lever II 多路阀操纵杆II | 1 | |
| 5 | | RF025-7-7400003-A0 | Lift handle 起升手柄 | 1 | |
| 6 | | RF025-7-7403000-A0 | Multi valve control lever I 多路阀操纵杆I | 1 | |
| 7 | | RF025-7-7400001-A0 | Connecting rod 连杆 | 4 | |
| 8 | | RF025-7-7400002-A0 | Sheath 多路阀护套 | 4 | |
| 9 | | GB/T882-Φ6*18 | Pin Φ6×18 销轴Φ6×18 | 8 | |
| 10 | | GB/T91-2*12 | Pin 2×12 开口销2×12 | 8 | |
| 11 | | GB/T818-M6*16-4.8J | Bolt M6×16 螺钉M6×16 | 2 | |
| 12 | | RF025-7-7402000-A0 | Multi valve cover 多路阀罩 | 1 | |
| 13 | | GB/T5783-M6*12-8.8J | Bolt M6×12 螺栓M6×12 | 5 | |
| 14 | | GB/T93-6 | Washer 6 垫圈6 | 5 | |
| 15 | | GB/T5783-M10*20-8.8J | Bolt M10×20 螺栓M10×20 | 3 | |
| 16 | | GB/T97.1-10 | Washer 10 垫圈10 | 6 | |
| 17 | | GB/T 93-10 | Washer 10 垫圈10 | 6 | |
| 18 | | GB/T5786-M10*1.25*30-8.8J | Bolt M10×1.25×30 螺栓M10×1.25×30 | 3 | |
| 19 | | RF025-7-7401000-A0 | Seat 多路阀安装支座 | 1 | |
| 20 | | RF035-4-7410000-A0 | Pin 多路阀安装支座销轴 | 1 | |
| 21 | | RF025-7-7400007-A0 | Handle sleeve 手柄隔套 | 1 | |
| 22 | | RF035-4-7400008-A0(1MM) | Bushing-1mm 多路阀尼龙衬套-1mm | 按需 | |
| - | | RF035-4-7400008-A0(2MM) | Bushing-2mm 多路阀尼龙衬套-2mm | 按需 | |

图22/Fig. 22　　多路阀换向操纵（三联）/ MULTI-WAY VALVE CONTROL（THREE-THROW）

R2B18-Li R2B25-Li

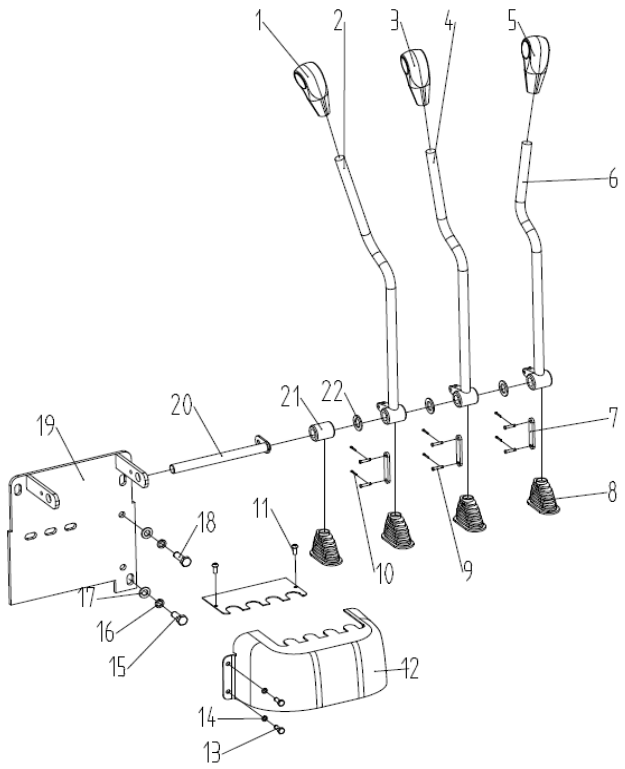


| 序号 | 物料号 | 代号 | 名称 | 数量 | 备注 |
|---|---|---|---|---|---|
| Item No. | ID. | Part No. | Description | Q’ty | Remark |
| - | | RF035-4-7400008-A0(3MM) | Bushing-3mm　多路阀尼龙衬套-3mm | 按需 | |

图23/Fig. 23　　多路阀换向操纵（四联）/ MULTI-WAY VALVE CONTROL（FOUR-THROW）

R2B18-Li R2B25-Li

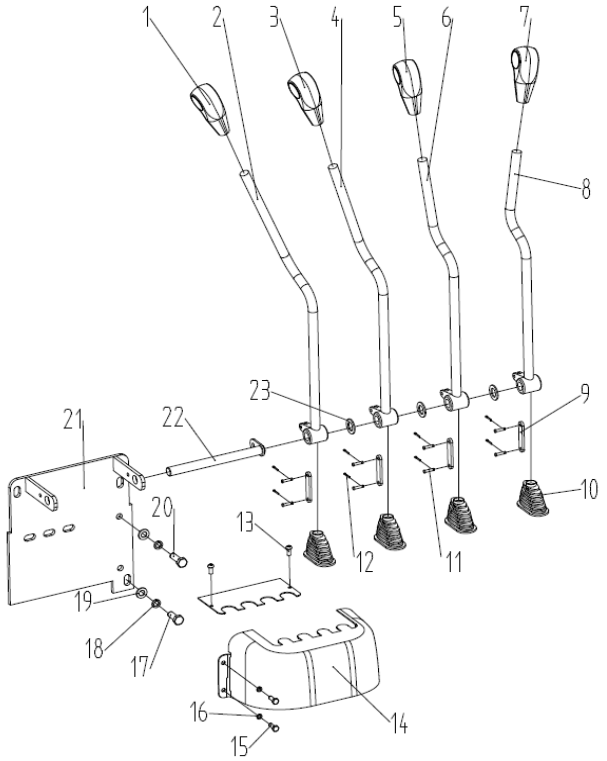


| 序号 | 物料号 | 代号 | 名称 | 数量 | 备注 |
|---|---|---|---|---|---|
| Item No. | ID. | Part No. | Description | Q' ty | Remark |
| 1 | | RF025-7-7400006-A0 | Unlabelled handle 无标识手柄 | 1 | |
| 2 | | RF025-7-7406000-A0 | Multi valve control lever IV 多路阀操纵杆IV | 1 | |
| 3 | | RF025-7-7400005-A0 | Handle 属具手柄 | 1 | |
| 4 | | RF025-7-7405000-A0 | Multi valve control lever III 多路阀操纵杆III | 1 | |
| 5 | | RF025-7-7400004-A0 | Tilt handle 倾斜手柄 | 1 | |
| 6 | | RF025-7-7404000-A0 | Multi valve control lever II 多路阀操纵杆II | 1 | |
| 7 | | RF025-7-7400003-A0 | Lift handle 起升手柄 | 1 | |
| 8 | | RF025-7-7403000-A0 | Multi valve control lever I 多路阀操纵杆I | 1 | |
| 9 | | RF025-7-7400001-A0 | Connecting rod 连杆 | 4 | |
| 10 | | RF025-7-7400002-A0 | Sheath 多路阀护套 | 4 | |
| 11 | | GB/T882-Φ6*18 | Pin Φ6×18 销轴Φ6×18 | 8 | |
| 12 | | GB/T91-2*12 | Pin 2×12 开口销2×12 | 8 | |
| 13 | | GB/T818-M6*16-4.8J | Bolt M6×16 螺钉M6×16 | 2 | |
| 14 | | RF025-7-7402000-A0 | Multi valve cover 多路阀罩 | 1 | |
| 15 | | GB/T5783-M6*12-8.8J | Bolt M6×12 螺栓M6×12 | 5 | |
| 16 | | GB/T93-6 | Washer 6 垫圈6 | 5 | |
| 17 | | GB/T5783-M10*20-8.8J | Bolt M10×20 螺栓M10×20 | 3 | |
| 18 | | GB/T97.1-10 | Washer 10 垫圈10 | 6 | |
| 19 | | GB/T 93-10 | Washer 10 垫圈10 | 6 | |
| 20 | | GB/T5786-M10*1.25*30-8.8J | Bolt M10×1.25×30 螺栓M10×1.25×30 | 3 | |
| 21 | | RF025-7-7401000-A0 | Seat 多路阀安装支座 | 1 | |
| 22 | | RF035-4-7410000-A0 | Pin 多路阀安装支座销轴 | 1 | |
| 23 | | RF035-4-7400008-A0(1MM) | Bushing-1mm 多路阀尼龙衬套-1mm | 按需 | |

图23/Fig. 23　　多路阀换向操纵（四联）/ MULTI-WAY VALVE CONTROL（FOUR-THROW）

R2B18-Li R2B25-Li

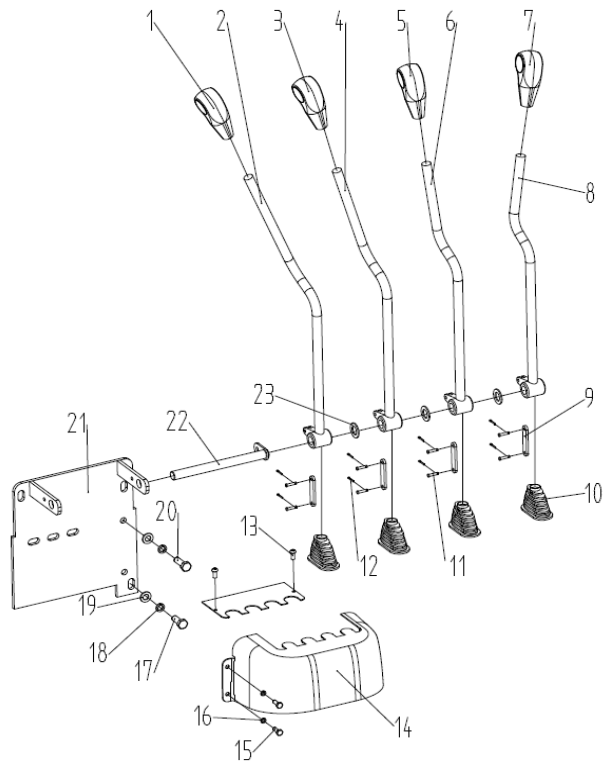


| 序号 | 物料号 | 代号 | 名称 | 数量 | 备注 |
|---|---|---|---|---|---|
| Item No. | ID. | Part No. | Description | Q’ty | Remark |
| - | | RF035-4-7400008-A0(2MM) | Bushing-2mm　多路阀尼龙衬套-2mm | 按需 | |
| - | | RF035-4-7400008-A0(3MM) | Bushing-3mm　多路阀尼龙衬套-3mm | 按需 | |

图24/Fig. 24　　工作油箱及安装/ FUEL TANK ASS'Y

R2B18-Li R2B25-Li

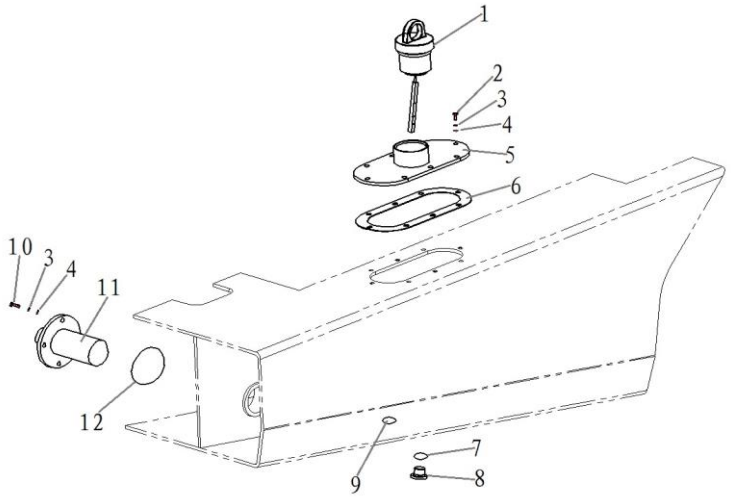


| 序号 | 物料号 | 代号 | 名称 | 数量 | 备注 |
|---|---|---|---|---|---|
| Item No. | ID. | Part No. | Description | Q' ty | Remark |
| 1 | | RF025-7-7501000-A0 | Fuel tank cover 加油盖 | 1 | |
| 2 | | GB/T5783-2000-M8*20 | Bolt M8×20 螺栓M8×20 | 8 | |
| 3 | | GB/T93-8 | Washer 8 垫圈8 | 12 | |
| 4 | | GB/T97.1-8 | Washer 8 垫圈8 | 12 | |
| 5 | | RF025-7-7502000-A0 | Hydraulic cap Assy 油箱盖总成 | 1 | |
| 6 | | RF025-7-7500001-A0 | Gasket 密封垫 | 1 | |
| 7 | | JB/T982-1977 | Pad 20 组合密封垫圈 20 | 1 | |
| 8 | | RF035-4-2200004-A0 | Drain plug 放油塞 | 1 | |
| 9 | | RF035-4-2200001-A0 | Magnet 吸铁石 | 1 | |
| 10 | | GB/T5783-2000-M8*25 | Bolt M8×25 螺栓M8×25 | 4 | |
| 11 | | RF025-7-7503000-A0 | Filter core 滤芯 | 1 | |
| 12 | | GB/T3452.1-1992 | O-ring 54.5×3.55 O形圈 54.5×3.55 | 1 | |

图25/Fig25.　　液压系统/HYDRAULIC SYSTEM

R2B18-Li R2B25-Li

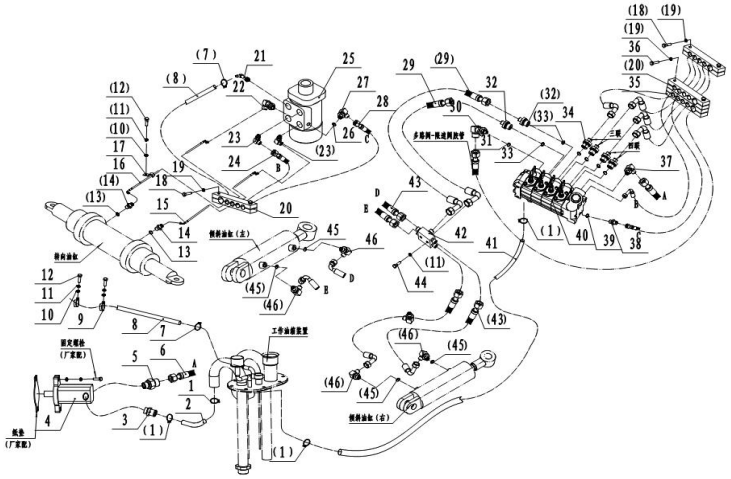

| 序号 | | 代号 | 名称 | 数量 | 备注 |
|---|---|---|---|---|---|
| Item No. | | Part No. | Descripition | Q’ty | Remark |
| A | | - | Hydraulic system 液压管路系统 | 1 | |
| 01 | | JB/T8870-1999 | Hoop Φ45 喉箍Φ32-44 | 4 | |
| 02 | | RF025-7-7600001-A0 | Pump suction pipe 泵吸油管 | 1 | |
| 03 | | RF025-7-7601000-A0 | Pump suction fitting 泵进油接头 | 1 | |
| 04 | | RF025-7-7602000-A0 | Gear pump 齿轮泵 | 1 | |
| 05 | | RF025-7-7603000-B0 | pipe connecto 泵出油接头 | 1 | |
| 06 | | RF025-7-7600002-B0 | Hose assy 多路阀进油胶管 | 1 | |
| 07 | | JB/T8870-1999 | Hose hoops%c22 抱箍 | 2 | |
| 08 | | RF025-7-7600003-A0 | Oil return hose 转向器回油管 | 1 | |
| 09 | | GMS-DJR20 | Pipe clamp 抱箍 | 2 | |
| 10 | | GB/T97.1-2002 | Washer 6 垫圈 | 3 | |
| 11 | | GB/T93-1987 | Washer 6 垫圈 | 5 | |
| 12 | | GB/T5783-2000 | Bolt M6%x12 螺栓M6×12 | 3 | |
| 13 | | GB1235-76 | O-ring 18×2.4 O形圈18×2.4 | 2 | |
| 14 | | RF025-7-7600004-B0 | Hinged bolts 接头 | 2 | |
| 15 | | RF025-7-7600005-B0 | Steering hose assy Ⅰ 转向胶管Ⅰ | 1 | |
| 16 | | RF025-7-7600006-B0 | Steering hose assy Ⅱ 转向胶管Ⅱ | 1 | |
| 17 | | RF035-4-7600005-B0 | Pipe clamp 管夹 | 1 | |
| 18 | | GB/T5782-2000 | Bolt M8×45 螺栓M8×45 | 6 | |
| 19 | | GB/T93-1987 | Washer 8 垫圈 | 6 | |
| 20 | | RF025-7-7600007-A0 | Pipe clampⅠ 管夹Ⅰ | 8 | |
| 21 | | RF035-4-7604000-A0 | pipe connector 回油接头 | 1 | |
| 22 | | RF035-4-7605000-A0 | ConnextorⅠ 接头Ⅰ | 1 | |
| 23 | | RF035-4-7606000-A0 | ConnextorⅡ 接头Ⅱ | 2 | |
| 24 | | RF025-7-7600008-B0 | Suction hose 转向器进油胶管 | 1 | |

图25/Fig25.　　液压系统/HYDRAULIC SYSTEM

R2B18-Li R2B25-Li

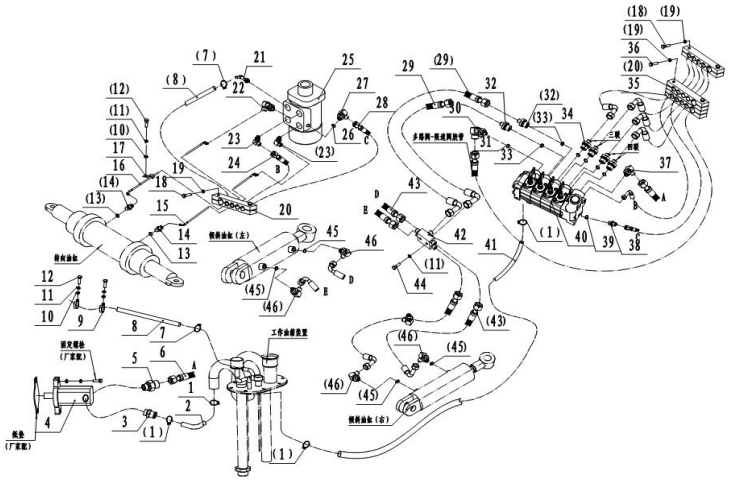

| 序号 | | 代号 | 名称 | 数量 | 备注 |
|---|---|---|---|---|---|
| Item No. | | Part No. | Descripition | Q’ty | Remark |
| A | | - | Hydraulic system 液压管路系统 | 1 | |
| 25 | | RF025-7-7604000-A0 | Orbitol 转向器 | 1 | |
| 26 | | GB/T3452.1-1992 | O-ring 8.5%x2.65 O形圈8.5×2.65 | 2 | |
| 27 | | RF025-7-7605000-B0 | Load sensing joint 负荷传感接头 | 2 | |
| 28 | | RF025-7-7600009-B0 | Load sensing hose 负荷传感胶管 | 1 | |
| 29 | | RF035-4-7600014-B0 | Hose assy 多路阀倾斜缸胶管 | 2 | |
| 30 | | F030-D-7603000-A0 | Connextor 多路阀-起升缸接头 | 1 | |
| 31 | | GB/T3452.1-1992 | O-ring 17%x2.65 O型圈17×2.65 | 1 | |
| 32 | | RF035-4-7600009-A0 | Connextor 多路阀-倾斜缸接头 | 2 | |
| 33 | | GB1235-76 | O-ring 22%x2.4 O型圈22×2.4 | 4 | |
| 34 | | RF035-4-7600010-A0 | Connextor 转向器接头 | 2 | 三联 |
| - | | RF035-4-7600010-A0 | Connextor 转向器接头 | 4 | 四联 |
| 35 | | RF025-7-7600010-A0 | Pipe clamp Ⅱ 管夹Ⅱ | 4 | |
| 36 | | GB/T5782-2000 | Bolt M8%x75 螺栓M8×75 | 2 | |
| 37 | | RF025-7-7606000-B0 | Connextor 多路阀进油接头 | 1 | |
| 38 | | RF025-7-7600011-B0 | Sensing joint 多路阀负荷传感接头 | 1 | |
| 39 | | GB1235-76 | O-ring 14%x2.4 O型圈14×2.4 | 1 | |
| 40 | | RF025-7-7607000-B0 | Valve 多路阀 | 1 | 标配 |
| - | | RF025-7-7608000-B0 | Valve 多路阀 | 1 | OPS用 |
| 41 | | RF025-7-7600012-A0 | Return pipe 多路阀回油管 | 1 | |
| 42 | | RF025-7-7609000-B0 | six-way valve 六通阀 | 1 | |
| 43 | | RF025-7-7600013-B0 | Hose assy 倾斜缸胶管 | 4 | |
| 44 | | GB5783-2000 | Bolt M6%x25 螺栓M6×25 | 2 | |
| 45 | | GB/T3452.1-1992 | O-ring 11.2%x2.65 O型圈11.2×2.65 | 4 | |
| 46 | | RF035-4-7613000-A0 | 90%dconnector 倾斜缸接头 | 4 | |

图26/Fig26. 门架管路系统(基本型二联)/MAST HYDRAULIC SYSTEM(NORMAL MAST Two-THROW)

R2B18-Li R2B25-Li

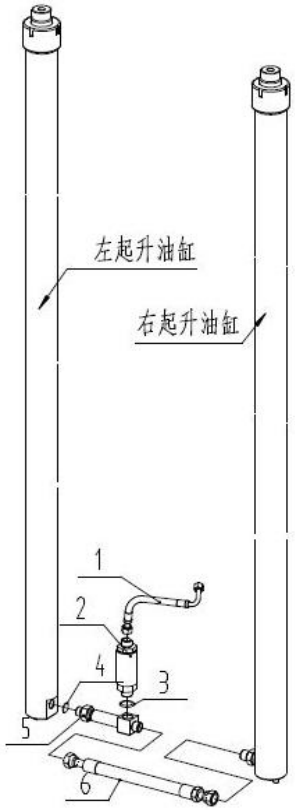


| 序号 Item No. | | 代号 Part No. | 名称 Descripition | | 数量 Q'ty | 备注 Remark |
|---|---|---|---|---|---|---|
| A | | - | Mast hydraulic system | 门架管路系统 | 1 | |
| 01 | | RF025-7-8600001-B0 | Flow regulator H.P. hose | 多路阀-限速阀胶管 | 1 | |
| 02 | | RF018-7-8601000-B0 | Flow regulator | 限速阀 | 1 | 1.8t |
| - | | F020-D-8601000-AO | Flow regulator | 限速阀 | 1 | 2.5t |
| 03 | | GB1235-76 | O-ring 24×2.4 | O形圈 24×2.4 | 1 | |
| 04 | | GB3452.1-1992 | O-ring 17×2.65 | O形圈 17×2.65 | 1 | |
| 05 | | F030-D-8602000-AO | Lift cylinder tee connector | 起升缸三通 | 1 | 1.8t |
| 06 | | RF018-7-8600001-B0 | H.P.hose | 起升缸之间胶管 | 1 | |
| - | | RF025-4-8600001-B0 | H.P.hose | 三通-三通胶管 | 1 | 2.5t |

图27/Fig27. 门架管路系统(基本型三联)/MAST HYDRAULIC SYSTEM(NORMAL MAST Three-THROW)

R2B18-Li

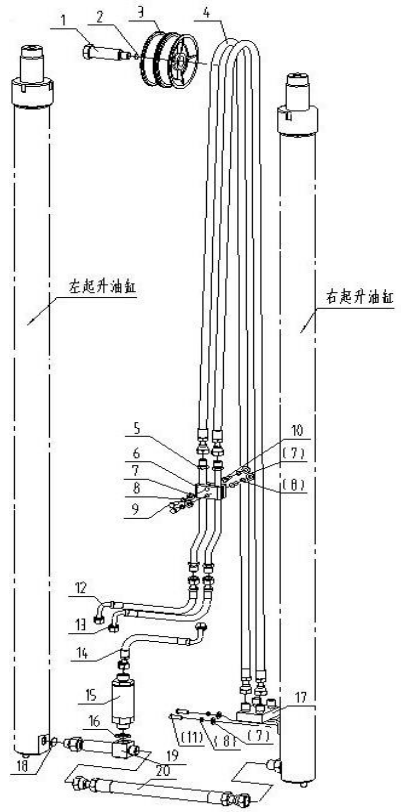


| 序号 Item No. | | 代号 Part No. | 名称 Descripition | | 数量 Q'ty | 备注 Remark |
|---|---|---|---|---|---|---|
| A | | - | Mast hydraulic system | 门架管路系统 | 1 | |
| 01 | | RF035-4-88S00001-A0 | Step Bolt | 台阶螺栓 | 1 | |
| 02 | | RF035-4-8800003-A0 | Sleeve | 隔套 | 3 | |
| 03 | | RF035-4-8800004-A0 | Pulley | 滑轮 | 2 | |
| 04 | | RF018-7-86S01000-B0 | Pulley H.P. hose | 侧移胶管 | 2 | |
| 05 | | RF035-4-86S03000-A0 | Oil pipe assy | | | |
| 06 | | GB97.1-2002 | Pipe clamp | 调节硬管 | 2 | |
| 07 | | GB93-1987 | Washer 8 | 管夹 | 1 | |
| 08 | | GB5783-2000 | Washer 8 | 垫圈8 | 6 | |
| 09 | | GB5783-2000 | Bolt M8%x30 | 垫圈8 | 6 | |
| 10 | | GB/T5783-2000 | Bolt M8%x25 | 螺栓M8×30 | 2 | |
| 11 | | GB/T5783-2000 | Bolt M8×25 | 螺栓M8×25 | 2 | |
| 12 | | RF025-7-86S00001-B0 | Adguesting H.P.hose Ⅰ | 多路阀-调节硬管胶管Ⅰ | 1 | |
| 13 | | RF025-7-86S00002-B0 | Adguesting H.P.hose Ⅱ | 多路阀-调节硬管胶管Ⅱ | 1 | |
| 14 | | RF018-7-8601000-B0 | Flow regulator H.P. hose | 多路阀-限速阀胶管 | 1 | |
| 15 | | RF018-7-8601000-B0 | Flow regulator | 限速阀 | 1 | |
| 16 | | GB5783-2000 | O-ring 24×2.4 | O形圈 24×2.4 | 1 | |
| 17 | | RF018-7-86S02000-B0 | Cross connector | 四通 | 1 | |
| 18 | | GB/T3452.1-1992 | O-ring 17x2.65 | O形圈 17×2.65 | 1 | |
| 19 | | F030-D-8602000-AO | Lift cylinder tee connector | 起升缸三通 | 1 | |
| 20 | | RF018-7-8600001-B0 | H.P.hose | 起升缸之间胶管 | 1 | |

图27/Fig27. 门架管路系统(基本型三联)/MAST HYDRAULIC SYSTEM(NORMAL MAST Three-THROW)

R2B18-Li

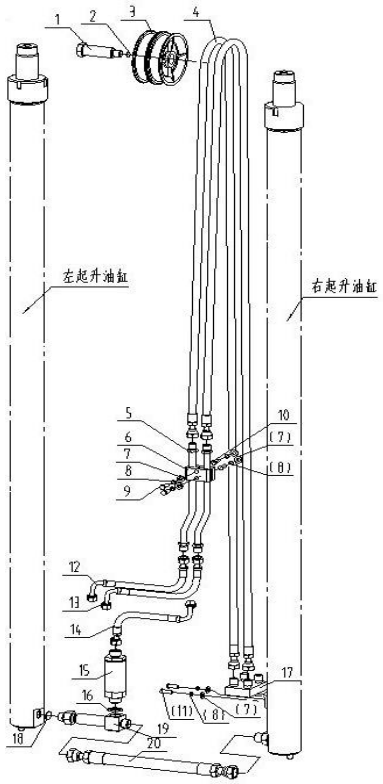


管路系统选用件-侧移胶管(件4) Sway hose Optional Parts

| 起升高度 LIFTING HEIGHT | RF018-7-86S01000-B0 PLASTIC HOSE 图号-长度 | | | 备注 REMARK |
|---|---|---|---|---|
| 2700 | RF018-7-86S01000-B0/2.7-2295 | | | |
| 3000 | RF035-4-88S02000-B0/6.0-2570 | | | |
| 3300 | RF025-4-88S04000-B0/4.35-2855 | | | |
| 3500 | RF025-4-88S04000-B0/4.7-3070 | | | |
| 3700 | RF018-7-86S01000-B0/3.7-3285 | | | |
| 4000 | RF018-7-86S01000-B0/4.0-3680 | | | 标准 |
| 4500 | RF035-4-88S06000-B0/6.0-4180 | | | |
| 5000 | RF018-7-86S01000-B0/5.0-4675 | | | |
| 5500 | RF018-7-86S01000-B0/5.5-5275 | | | |
| 6000 | RF018-7-86S01000-B0/6.0-5775 | | | |

图28/Fig28. 门架管路系统(基本型三联)/MAST HYDRAULIC SYSTEM(NORMAL MAST Three-THROW)

R2B25-Li

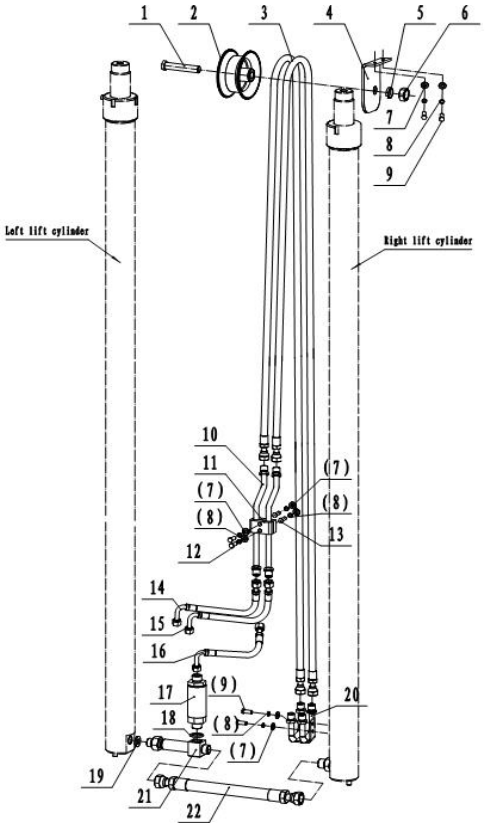


| 序号 Item No. | | 代号 Part No. | 名称 Descripition | | 数量 Q'ty | 备注 Remark |
|---|---|---|---|---|---|---|
| A | | - | Mast hydraulic system | 门架管路系统 | 1 | |
| 01 | | GB5782-2000 | Bolt M16×80 | 螺栓 | 1 | |
| 02 | | RF035-4-86S00001-A0 | Pulley wheel | 滑轮 | 1 | |
| 03 | | RF025-4-86S01000-B0 | Hose connector | 侧移胶管 | 2 | |
| 04 | | RF035-4-86S00002-A0 | plate right | 右固定板 | 1 | |
| 05 | | GB93-1987 | Washer 16 | 垫圈16 | 1 | |
| 06 | | GBT41-2000 | Nut M16%x2 | 螺母 | 1 | |
| 07 | | GB/T97.1-2002 | Washer 8 | 垫圈8 | 8 | |
| 08 | | GB/T93-1987 | Washer 8 | 垫圈8 | 8 | |
| 09 | | GB/T5783-2000 | Bolt M8×16 | 螺栓M8×16 | 4 | |
| 10 | | RF035-4-86S02000-B0 | Oil pipe assy | 调节硬管 | 2 | |
| 11 | | RF035-4-86S03000-A0 | Pipe clamp | 管夹 | 1 | |
| 12 | | GB/T5783-2000 | Bolt M8×30 | 螺栓M8×30 | 2 | |
| 13 | | GB/T5783-2000 | Bolt M8×25 | 螺栓M8×25 | 2 | |
| 14 | | RF025-7-86S00001-B0 | Hose connector | 多路阀-调节硬管胶管Ⅰ | 1 | |
| 15 | | RF025-7-86S00002-B0 | Hose connector | 多路阀-调节硬管胶管Ⅱ | 1 | |
| 16 | | RF025-7-8600001-B0 | Oil pipe assy | 多路阀-限速阀胶管 | 1 | |
| 17 | | F020-D-8601000-AO | Speed limiting | 限速阀 | 1 | |
| 18 | | GB/1235-76 | O-ring 24×2.4 | O形圈 24×2.4 | 1 | |
| 19 | | GB/T3452.1-1992 | O-ring 17x2.65 | O形圈 17×2.65 | 1 | |
| 20 | | RF035-4-86S04000-B0 | Oil pipe assy | 四通 | 1 | |
| 21 | | F030-D-8602000-AO | Tee connector | 限速阀三通 | 1 | |
| 22 | | RF025-4-8600001-B0 | Oil pipe assy | 起升缸之间胶管 | 1 | |

图28/Fig28. 门架管路系统(基本型三联)/MAST HYDRAULIC SYSTEM(NORMAL MAST Three-THROW)

R2B18-Li

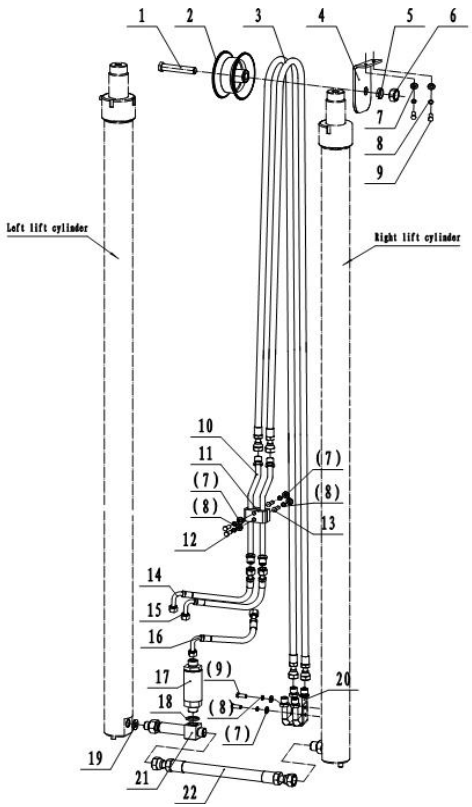


管路系统选用件-侧移胶管(件4)

Sway hose Optional Parts

| 起升高度 LIFTING HEIGHT | | RF025-4-86S01000-B0 PLASTIC HOSE 图号-长度 | | | 备注 REMARK |
|---|---|---|---|---|---|
| 2700 | | RF025-4-86S01000-A0/2.7 -2100 | | | |
| 3000 | | RF035-4-88S02000-A0/5.5-2390 | | | |
| 3300 | | RF025-4-86S01000-A0/3.3-2685 | | | |
| 3500 | | RF025-4-86S01000-A0/3.5-2880 | | | |
| 3700 | | RF025-4-86S01000-A0/3.7 -3080 | | | |
| 4000 | | RF035-4-88S06000-A0/5.0-3480 | | | |
| 4500 | | RF025-4-86S01000-A0/4.5-3970 | | | |

图29/Fig29. 门架管路系统(基本型四联)/MAST HYDRAULIC SYSTEM(NORMAL MAST Four-THROW)

R2B18-Li

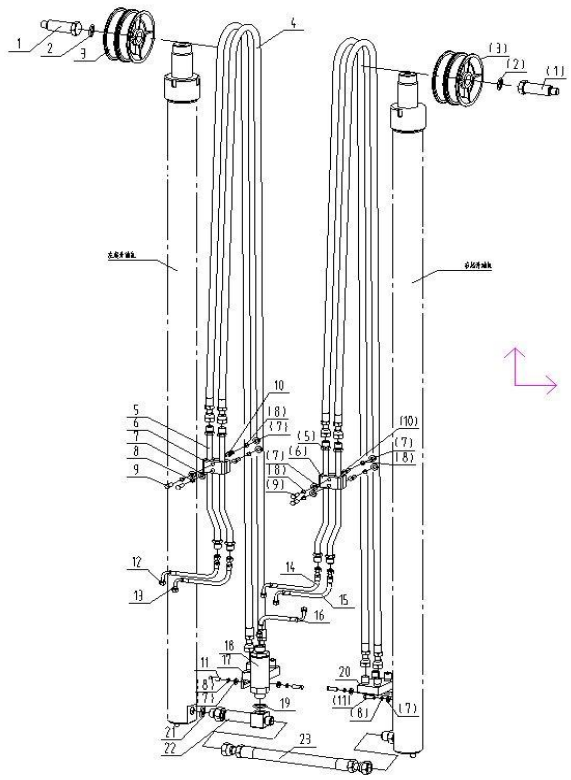

| 序号 Item No. | | 代号 Part No. | 名称 Descripition | | 数量 Q'ty | 备注 Remark |
|---|---|---|---|---|---|---|
| A | | - | Mast hydraulic system | 门架管路系统 | 1 | |
| 01 | | RF035-4-88S00001-A0 | Step Bolt | 台阶螺栓 | 2 | |
| 02 | | RF035-4-8800003-A0 | Sleeve | 隔套 | 6 | |
| 03 | | RF035-4-8800004-A0 | Pulley | 滑轮 | 4 | |
| 04 | | RF018-7-86S01000-B0 | Pulley H.P. hose | 侧移胶管 | 4 | |
| 05 | | RF035-4-86S02000-B0 | Adguesting pipe | 调节硬管 | 4 | |
| 06 | | RF035-4-86S03000-A0 | Clip | 管夹 | 2 | |
| 07 | | GB5783-2000 | Washer 8 | 垫圈8 | 12 | |
| 08 | | GB97.1-2002 | Washer 8 | 垫圈8 | 12 | |
| 09 | | GB93-1987 | Bolt M8×30 | 螺栓M8×30 | 4 | |
| 10 | | GB5783-2000 | Bolt M8×25 | 螺栓M8×25 | 4 | |
| 11 | | GB5783-2000 | Bolt M8×16 | 螺栓M8×16 | 4 | |
| 12 | | RF025-7-86SS00001-B0 | Adguesting H.P.hose Ⅱ | 多路阀-调节硬管胶管Ⅱ | 1 | |
| 13 | | RF025-7-86SS00002-B0 | Adguesting H.P.hose Ⅰ | 多路阀-调节硬管胶管Ⅰ | 1 | |
| 14 | | RF025-7-86S00001-B0 | Adguesting H.P.hose Ⅱ | 多路阀-调节硬管胶管Ⅱ | 1 | |
| 15 | | RF025-7-86S00002-B0 | Adguesting H.P.hose Ⅰ | 多路阀-调节硬管胶管Ⅰ | 1 | |
| 16 | | RF025-7-8600001-B0 | Flow regulator H.P. hose | 多路阀-限速阀胶管 | 1 | |
| 17 | | RF018-7-86SS01000-B0 | Cross connector | 四通 | 1 | |
| 18 | | RF018-7-8601000-B0 | Flow regulator | 限速阀 | 1 | |
| 19 | | GB1235-76 | O-ring 24×2.4 | O形圈 24×2.4 | 1 | |
| 20 | | RF018-7-86S02000-B0 | Cross connector | 四通 | 1 | |
| 21 | | GB3452.1-1992 | O-ring 17x2.65 | O形圈 17×2.65 | 1 | |
| 22 | | F030-D-8602000-AO | Lift cylinder tee connector | 起升缸三通 | 1 | |
| 23 | | RF018-7-8600001-B0 | H.P.hose | 起升缸之间胶管 | 1 | |
| | | | | | | |

图30/Fig30. 门架管路系统(基本型四联)/MAST HYDRAULIC SYSTEM(NORMAL MAST Four-THROW)

R2B25-Li

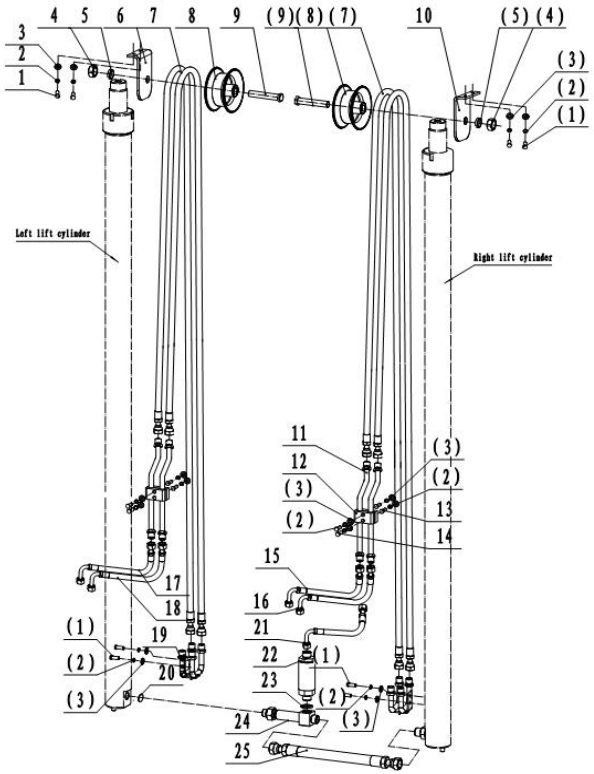


| 序号 Item No. | | 代号 Part No. | 名称 Descripition | | 数量 Q'ty | 备注 Remark |
|---|---|---|---|---|---|---|
| A | | - | Mast hydraulic system | 门架管路系统 | 1 | |
| 01 | | GB/T97.1-2002 | Washer 8 | 垫圈8 | 17 | |
| 02 | | GB/T93-1987 | Washer 8 | 垫圈8 | 17 | |
| 03 | | GB/T5783-2000 | Bolt M8×16 | 螺栓M8×16 | 9 | |
| 04 | | GB/T93-1987 | Washer 16 | 垫圈16 | 2 | |
| 05 | | GB/T41-2000 | Nut M16×2 | 螺母 | 2 | |
| 06 | | RF035-4-86SS00001-A0 | plate lift | 左固定板 | 1 | |
| 07 | | RF025-4-86S01000-B0 | Hose connector | 侧移胶管 | 4 | |
| 08 | | RF035-4-86S00001-A0 | Pulley wheel | 滑轮 | 2 | |
| 09 | | GB/T5782-2000 | Bolt M16×80 | 螺栓 | 2 | |
| 10 | | RF035-4-86S00002-A0 | plate right | 右固定板 | 1 | |
| 11 | | RF035-4-86S02000-B0 | Oil pipe assy | 调节硬管 | 4 | |
| 12 | | RF035-4-86S03000-A0 | Pipe clamp | 管夹 | 2 | |
| 13 | | GB/T5783-2000 | Bolt M8×25 | 螺栓M8×25 | 4 | |
| 14 | | GB/T5783-2000 | Bolt M8×30 | 螺栓M8×30 | 4 | |
| 15 | | RF025-7-86S00001-B0 | Hose connector | 多路阀-调节硬管胶管Ⅰ | 1 | |
| 16 | | RF025-7-86S00002-B0 | Hose connector | 多路阀-调节硬管胶管Ⅱ | 1 | |
| 17 | | RF025-7-86SS00001-B0 | Hose connector | 多路阀-调节硬管胶管Ⅰ | 1 | |
| 18 | | RF025-7-86SS00002-B0 | Hose connector | 多路阀-调节硬管胶管Ⅱ | 1 | |
| 19 | | RF035-4-86S04000-B0 | Oil pipe assy | 四通 | 2 | |
| 20 | | GB3452.1-1992 | O-ring 17x2.65 | O形圈 17×2.65 | 1 | |
| 21 | | RF025-7-8600001-B0 | Oil pipe assy | 多路阀-限速阀胶管 | 1 | |
| 22 | | F020-D-8601000-AO | Speed limiting | 限速阀 | 1 | |
| 23 | | GB1235-76 | O-ring 24×2.4 | O形圈 24×2.4 | 1 | |
| 24 | | F030-D-8602000-AO | Tee connector | 限速阀三通 | 1 | |

图30/Fig30. 门架管路系统(基本型四联)/MAST HYDRAULIC SYSTEM(NORMAL MAST Four-THROW)

R2B25-Li

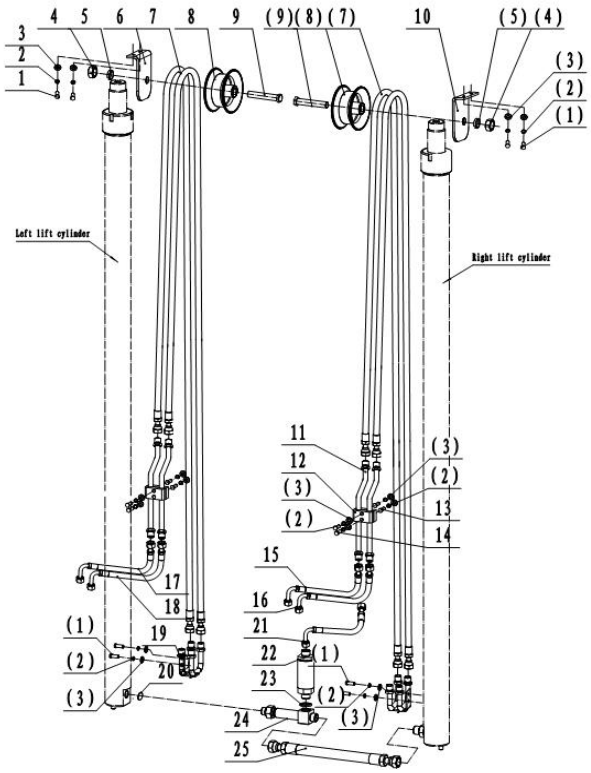


| 序号 Item No. | | 代号 Part No. | 名称 Descripition | | 数量 Q'ty | 备注 Remark |
|---|---|---|---|---|---|---|
| A | | - | Mast hydraulic system | 门架管路系统 | 1 | |
| 25 | | RF025-4-8600001-B0 | Oil pipe assy | 起升缸之间胶管 | 1 | |

图31/Fig31. 门架管路系统(三级全自由二联) MAST HYDRAULIC SYSTEM(FULL FREE 3-STAGE MAST Two-THROW)

R2B18-Li

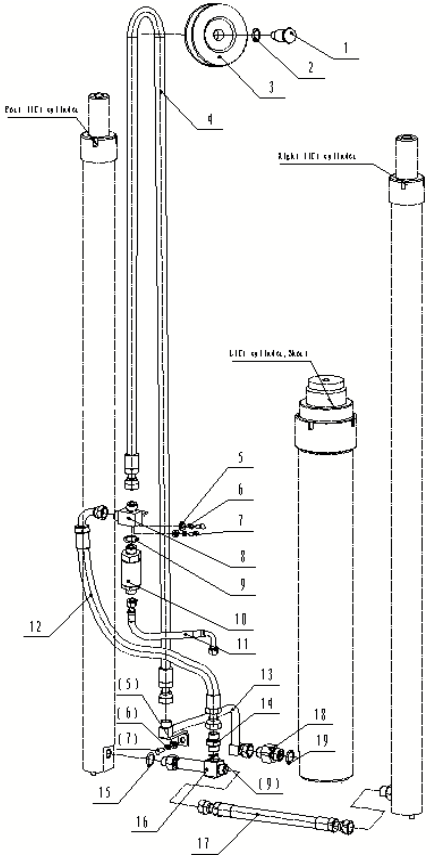


| 序号 Item No. | | 代号 Part No. | 名称 Descripition | | 数量 Q'ty | 备注 Remark |
|---|---|---|---|---|---|---|
| A | | - | Mast hydraulic system | 门架管路系统 | 1 | |
| 01 | | RF035-4-8800002-A0 | Step Bolt | 台阶螺栓 | 1 | |
| 02 | | RF035-4-8800003-A0 | Sleeve | 隔套 | 2 | |
| 03 | | RF035-4-8800004-A0 | Pulley | 滑轮 | 1 | |
| 04 | | RF018-7-8801000-B0 | Middle cylinder H.P. hose | 全自由缸进油胶管 | 1 | |
| 05 | | GB97.1-2002 | Washer 8 | 垫圈8 | 3 | |
| 06 | | GB93-1987 | Washer 8 | 垫片8 | 3 | |
| 07 | | GB5783-2000 | Bolt M8×16 | 螺栓M8×16 | 3 | |
| 08 | | RF035-4-8804000-B0 | Flow regulator tee connector | 限速阀三通 | 1 | |
| 09 | | GB1235-76 | O-ring 24×2.4 | O形圈 24×2.4 | 2 | |
| 10 | | RF018-7-8601000-B0 | Flow regulator | 限速阀 | 1 | |
| 11 | | RF025-7-8600001-B0 | Flow regulator H.P. hose | 多路阀-限速阀胶管 | 1 | |
| 12 | | RF035-4-8800005-B0 | H.P.hose | 三通-三通间胶管 | 1 | |
| 13 | | RF018-7-8802000-B0 | Middle cylinder pipe | 自由缸进油硬管 | | |
| 14 | | F030-D-8800005-A0 | Tee connector | 三通-三通间接头 | 1 | |
| 15 | | GB3452.1-1992 | O-seal ring 17×2.65 | O形密封圈17×2.65 | 1 | |
| 16 | | F030-D-8602000-AO | Lift cylinder tee connector | 起升缸三通 | 1 | |
| 17 | | RF018-7-8600001-B0 | H.P.hose | 起升缸之间胶管 | 1 | |
| 18 | | RF018-7-8800001-B0 | Middle cylinder connector | 自由缸接头 | 1 | |
| 19 | | GB1235-76 | O-ring 30×3.1 | O形圈 30×3.1 | 1 | |

图31/Fig31. 门架管路系统(三级全自由二联) MAST HYDRAULIC SYSTEM(FULL FREE 3-STAGE MAST Two-THROW)

R2B18-Li

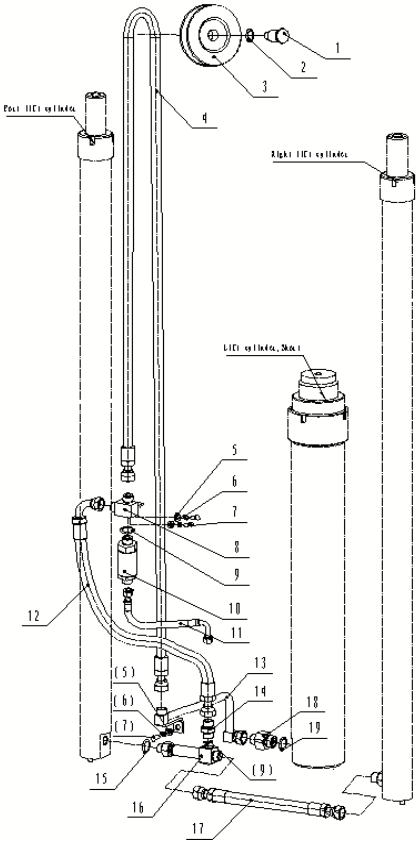


管路系统选用件-全自由缸进油胶管(件4)

Mast Piping Optional Parts

| 起升高度 LIFTING HEIGHT | | RF018-7-8801000-B0 Middle cylinder H.P. hose 图号-长度 | | | |
|---|---|---|---|---|---|
| 3600 | | RF018-7-8801000-B0/3.6 -2350 | | | |
| 4000 | | RF018-7-8801000-B0/4.0- 2590 | | | |
| 4350 | | RF018-7-8801000-B0/4.35-2830 | | | |
| 4500 | | RF018-7-8801000-B0/4.5-2940 | | | |
| 4700 | | RF018-7-8801000-B0/4.7-3070 | | | |
| 4800 | | RF025-4-8801000-B0/4.7 -3115 | | | |
| 5000 | | RF018-7-8801000-B0/5.0-3330 | | | |
| 5500 | | RF025-4-8801000-B0/5.5 -3665 | | | |
| 6000 | | RF018-7-8801000-B0/6.0-4020 | | | |
| 6500 | | RF018-7-8801000-B0/6.5-4450 | | | |

图32/Fig32. 门架管路系统(三级全自由二联) MAST HYDRAULIC SYSTEM(FULL FREE 3-STAGE MAST Two-THROW)

R2B25-Li

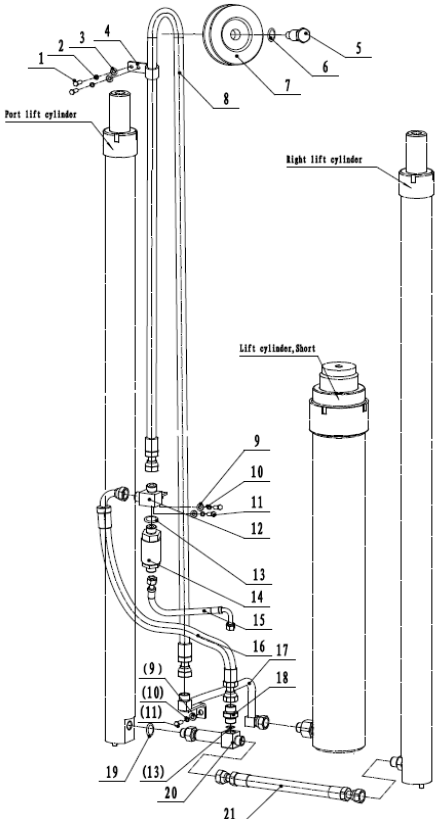


| 序号 Item No. | | 代号 Part No. | 名称 Descripition | | 数量 Q'ty | 备注 Remark |
|---|---|---|---|---|---|---|
| A | | - | Mast hydraulic system | 门架管路系统 | 1 | |
| 01 | | GB5783-2000 | Bolt M6×16 | 螺栓M6×16 | 2 | |
| 02 | | GB93-1987 | Washer 6 | 垫圈6 | 2 | |
| 03 | | GB97.1-2002 | Washer 6 | 垫圈6 | 2 | |
| 04 | | RF035-4-8800001-A0 | Clip | 管夹 | 1 | |
| 05 | | RF035-4-8800002-A0 | Step Bolt | 台阶螺栓 | 1 | |
| 06 | | RF035-4-8800003-A0 | Sleeve | 隔套 | 2 | |
| 07 | | RF035-4-8800004-A0 | Pulley | 滑轮 | 1 | |
| 08 | | RF025-4-8801000-B0 | Middle cylinder H.P. hose | 全自由缸进油胶管 | 1 | |
| 09 | | GB97.1-2002 | Washer 8 | 垫圈8 | 3 | |
| 10 | | GB93-1987 | Washer 8 | 垫圈8 | 3 | |
| 11 | | GB5783-2000 | Bolt M8×16 | 螺栓M8×16 | 3 | |
| 12 | | RF035-4-8804000-B0 | Flow regulator tee connector | 限速阀三通 | 1 | |
| 13 | | GB1235-76 | O-ring 24×2.4 | O形圈 24×2.4 | 2 | |
| 14 | | F020-D-8601000-AO | Flow regulator | 限速阀 | 1 | |
| 15 | | RF025-7-8600001-B0 | Flow regulator H.P. hose | 多路阀-限速阀胶管 | 1 | |
| 16 | | RF035-4-8800005-B0 | H.P.hose | 三通-三通间胶管 | 1 | |
| 17 | | RF025-4-8804000-B0 | Middle cylinder pipe | 自由缸进油硬管 | 1 | |
| 18 | | F030-D-8800005-A0 | Tee connector | 三通-三通间接头 | 1 | |
| 19 | | GB3452.1-1992 | O-seal ring 17×2.65 | O形密封圈17×2.65 | 1 | |
| 20 | | F030-D-8602000-AO | Lift cylinder tee connector | 起升缸三通 | 1 | |
| 21 | | RF025-4-8600001-B0 | H.P.hose | 起升缸之间胶管 | 1 | |

图32/Fig32. 门架管路系统(三级全自由二联) MAST HYDRAULIC SYSTEM(FULL FREE 3-STAGE MAST Two-THROW)

R2B25-Li

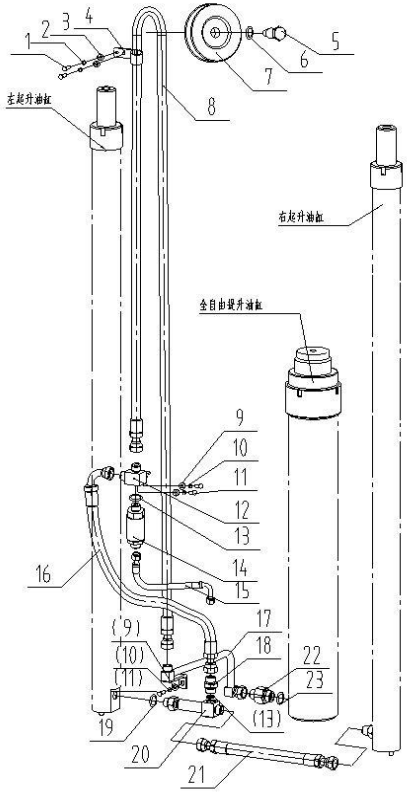


管路系统选用件-全自由缸进油胶管(件8)

Mast Piping Optional Parts

| 起升高度 LIFTING HEIGHT | | 18B88-01000 Middle cylinder H.P. hose 图号-长度 | | | |
|---|---|---|---|---|---|
| 3700 | | RF025-4-8801000-A0/3.7-2425 | | | |
| 4000 | | RF035-4-8801000-A0/3.7-2620 | | | |
| 4350 | | RF025-4-8801000-A0/4.35-2855 | | | |
| 4700 | | RF025-4-8801000-A0/4.7-3115 | | | |
| 4800 | | RF025-4-8801000-A0/4.8-3185 | | | |
| 5000 | | RF025-4-8801000-A0/5.0-3360 | | | |
| 5500 | | RF025-4-8801000-A0/5.5-3660 | | | |
| 6000 | | RF025-4-8801000-A0/6.0-4050 | | | |

图33/Fig33. 门架管路系统(三级全自由三联) MAST HYDRAULIC SYSTEM(FULL FREE 3-STAGE MAST Three-THROW)

R2B18-Li

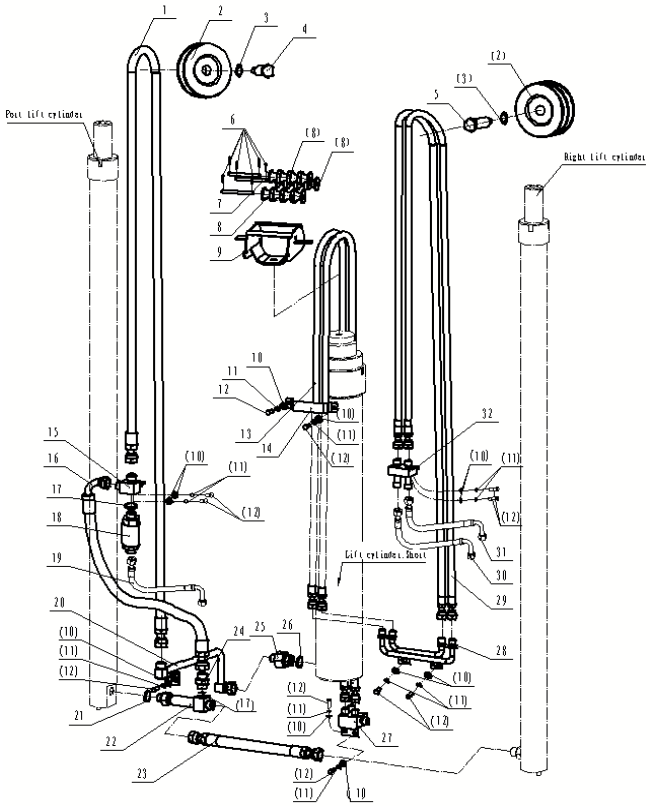


| 序号 Item No. | | 代号 Part No. | 名称 Descripition | | 数量 Q'ty | 备注 Remark |
|---|---|---|---|---|---|---|
| A | | - | Mast hydraulic system | 门架管路系统 | 1 | |
| 01 | | RF018-7-8801000-B0 | Middle cylinder H.P. hose | 全自由缸进油胶管 | 1 | |
| 02 | | RF035-4-8800004-A0 | Pulley | 滑轮 | 3 | |
| 03 | | RF035-4-8800003-A0 | Sleeve | 隔套 | 2 | |
| 04 | | RF035-4-8800002-A0 | Step Bolt | 台阶螺栓 | 1 | |
| 05 | | RF035-4-88S00001-A0 | Step Bolt | 台阶螺栓 | 1 | |
| 06 | | GB/T91-2000 | Cotter pin 2×14 | 开口销2×14 | 6 | |
| 07 | | GB/T880-1986 | Shaft Φ8×120 | 轴φ8×120 | 3 | |
| 08 | | RF035-4-88S00003-A0 | Pulley | 滑轮 | 3 | |
| 09 | | RF018-7-88S01000-A0 | Roller bracket | 滚轮支架 | 1 | |
| 10 | | GB97.1-2002 | Washer 8 | 垫圈8 | 11 | |
| 11 | | GB93-1987 | Washer 8 | 垫圈8 | 11 | |
| 12 | | GB5783-2000 | Bolt M8×16 | 螺栓M8×16 | 11 | |
| 13 | | RF018-7-88S02000-B0 | Pulley H.P. hose Ⅰ | 侧移胶管Ⅰ | 2 | |
| 14 | | RF035-4-88S00004-A0 | Clip | 管夹 | 1 | |
| 15 | | RF035-4-8804000-B0 | Flow regulator tee connector | 限速阀三通 | 1 | |
| 16 | | RF035-4-8800005-B0 | H.P.hose | 三通-三通间胶管 | 1 | |
| 17 | | GB1235-76 | O-ring 24×2.4 | O形圈 24×2.4 | 2 | |
| 18 | | RF018-7-8601000-B0 | Flow regulator | 限速阀 | 1 | |
| 19 | | RF025-7-8600001-B0 | Flow regulator H.P. hose | 多路阀-限速阀胶管 | 1 | |
| 20 | | RF018-7-8802000-B0 | Middle cylinder pipe | 自由缸进油硬管 | 1 | |
| 21 | | GB3452.1-1992 | O-seal ring 17×2.65 | O形密封圈17×2.65 | 1 | |
| 22 | | F030-D-8602000-AO | Lift cylinder tee connector | 起升缸三通 | 1 | |
| 23 | | RF018-7-8600001-B0 | H.P.hose | 起升缸之间胶管 | 1 | |
| 24 | | F030-D-8800005-A0 | Tee connector | 三通-三通间接头 | 1 | |

图33/Fig33. 门架管路系统(三级全自由三联) MAST HYDRAULIC SYSTEM(FULL FREE 3-STAGE MAST Three-THROW)

R2B18-Li

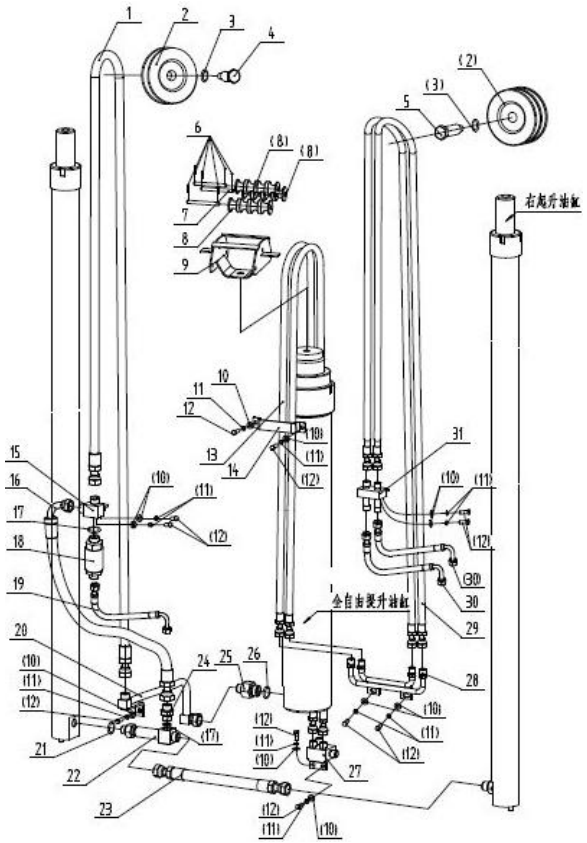


| 序号 Item No. | | 代号 Part No. | 名称 Descripition | | 数量 Q'ty | 备注 Remark |
|---|---|---|---|---|---|---|
| A | | - | Mast hydraulic system | 门架管路系统 | 1 | |
| 25 | | RF018-7-8800001-B0 | Middle cylinder connector | 自由缸接头 | 1 | |
| 26 | | GB1235-76 | O-ring 30×3.1 | O形圈 30×3.1 | 1 | |
| 27 | | RF035-4-88S04000-B0 | Cross connectorⅠ | 四通Ⅰ | 1 | |
| 28 | | RF018-7-88S03000-B0 | Connecting pipe | 侧移转接座 | 1 | |
| 29 | | RF018-7-88S04000-B0 | Pulley H.P. hoseⅡ | 侧移胶管Ⅱ | 2 | |
| 30 | | RF025-7-86S00001-B0 | Adguesting H.P.hose Ⅰ | 多路阀-调节硬管胶管Ⅰ | 1 | |
| 31 | | RF025-7-86S00002-B0 | Adguesting H.P.hose Ⅱ | 多路阀-调节硬管胶管Ⅱ | 1 | |
| 32 | | RF035-4-88S07000-B0 | Cross connectorⅡ | 四通 | 1 | |

图33/Fig33. 门架管路系统(三级全自由三联) MAST HYDRAULIC SYSTEM(FULL FREE 3-STAGE MAST Three-THROW)

R2B18-Li

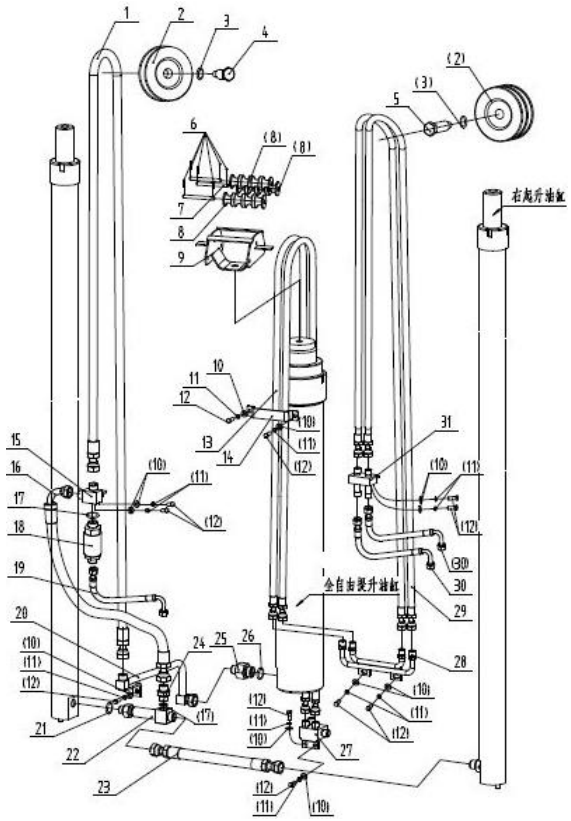


管路系统选用件-侧移胶管Ⅰ、Ⅱ(件13、件29)

Sway hose Optional Parts

| 起升高度 LIFTING HEIGHT | | Pulley H.P. hose Ⅰ 图号-长度 | RF018-7-88S04000-B0 Pulley H.P. hose Ⅱ 图号-长度 | | |
|---|---|---|---|---|---|
| 3600 | | RF018-7-88S02000-B0/3.6-1745 | RF025-4-88S01000-B0/5.5-2345 | | |
| 4000 | | RF035-4-88S02000-B0/4.0-1860 | RF035-4-88S02000-B0/6.0-2570 | | |
| 4350 | | RF025-4-88S01000-B0/4.35-1960 | RF018-7-88S04000-B0/4.35-2820 | | |
| 4500 | | RF025-4-88S02000-B0/4.7-2020 | RF018-7-88S04000-B0/4.5-2920 | | |
| 4700 | | RF025-4-88S01000-B0/4.7-2075 | RF018-7-88S04000-B0/4.7-3050 | | |
| 4800 | | RF018-7-88S02000-B0/4.8-2105 | RF018-7-88S04000-B0/4.8-3110 | | |
| 5000 | | RF025-4-88S01000-B0/5.0-2210 | RF025-4-88S04000-B0/4.8-3310 | | |
| 5500 | | RF035-4-88S02000-B0/5.5-2390 | RF025-4-88S04000-B0/5.5-3630 | | |
| 6000 | | RF035-4-86S01000-B0/3.0-2505 | RF018-7-88S04000-B0/6.0-4010 | | |
| 6500 | | RF035-4-88S06000-B0/4.0-2755 | RF018-7-88S04000-B0/6.5-4430 | | |

图34/Fig34. 门架管路系统(三级全自由三联) MAST HYDRAULIC SYSTEM(FULL FREE 3-STAGE MAST Three-THROW)

R2B25-Li

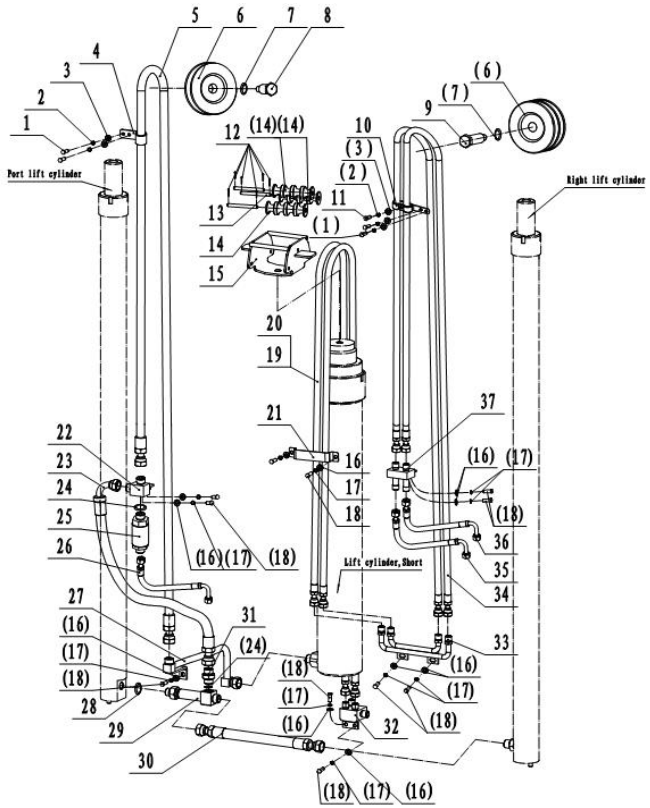


| 序号 Item No. | | 代号 Part No. | 名称 Descripition | | 数量 Q'ty | 备注 Remark |
|---|---|---|---|---|---|---|
| A | | - | Mast hydraulic system | 门架管路系统 | 1 | |
| 01 | | GB5783-2000 | Bolt M6×16 | 螺栓M6×16 | 4 | |
| 02 | | GB93-1987 | Washer 6 | 垫圈6 | 5 | |
| 03 | | GB97.1-2002 | Washer 6 | 垫圈6 | 5 | |
| 04 | | RF035-4-8800001-A0 | Clip | 管夹 | 1 | |
| 05 | | RF025-4-8801000-B0 | Middle cylinder H.P. hose | 全自由缸进油胶管 | 1 | |
| 06 | | RF035-4-8800004-A0 | Pulley | 滑轮 | 3 | |
| 07 | | RF035-4-8800003-A0 | Sleeve | 隔套 | 5 | |
| 08 | | RF035-4-8800002-A0 | Step Bolt | 台阶螺栓 | 1 | |
| 09 | | RF035-4-88S00001-A0 | Step Bolt | 台阶螺栓 | 1 | |
| 10 | | RF035-4-88S00002-A0 | Pipe clamp | 管夹 | 1 | |
| 11 | | GB/T5783-2000 | Bolt M6×25 | 螺栓 | 1 | |
| 12 | | GB/T91-2000 | Cotter pin2×14 | 开口销 | 6 | |
| 13 | | GB/T880-2008 | Headless pin -B Φ8×120 | 销轴-B Φ8×120 | 3 | |
| 14 | | RF035-4-88S00003-A0 | The pulley | 滑轮 | 3 | |
| 15 | | RF035-4-88S01000-A0 | Roller bracket | 滑轮支架 | 1 | |
| 16 | | GB/T97.1-2002 | Washer8 | 垫圈8 | 11 | |
| 17 | | GB/T93-1987 | Washer8 | 垫圈8 | 11 | |
| 18 | | GB/T5783-2000 | Bolt M8%x16 | 螺栓M8×16 | 11 | |
| 19 | | RF025-4-88S01000-B0 | Pulley H.P. hose Ⅰ | 侧移胶管Ⅰ | 2 | 2.5t(内置侧移不用) |
| 20 | | RF025-4-88S02000-B0 | Pulley H.P. hose Ⅱ | 侧移胶管Ⅱ | 2 | 2.5t(内置侧移用) |
| 21 | | RF035-4-88S00004-A0 | Clip | 管夹 | 1 | |
| 22 | | RF035-4-8804000-B0 | Tee joint | 限速阀三通 | 1 | |
| 23 | | RF035-4-8800005-B0 | Tee - tee hose | 三通-三通间胶管 | 1 | |
| 24 | | GB1235-76 | O-ring 24×2.4 | O形密封圈24×2.4 | 2 | |

图34/Fig34. 门架管路系统(三级全自由三联) MAST HYDRAULIC SYSTEM(FULL FREE 3-STAGE MAST Three-THROW)

R2B25-Li

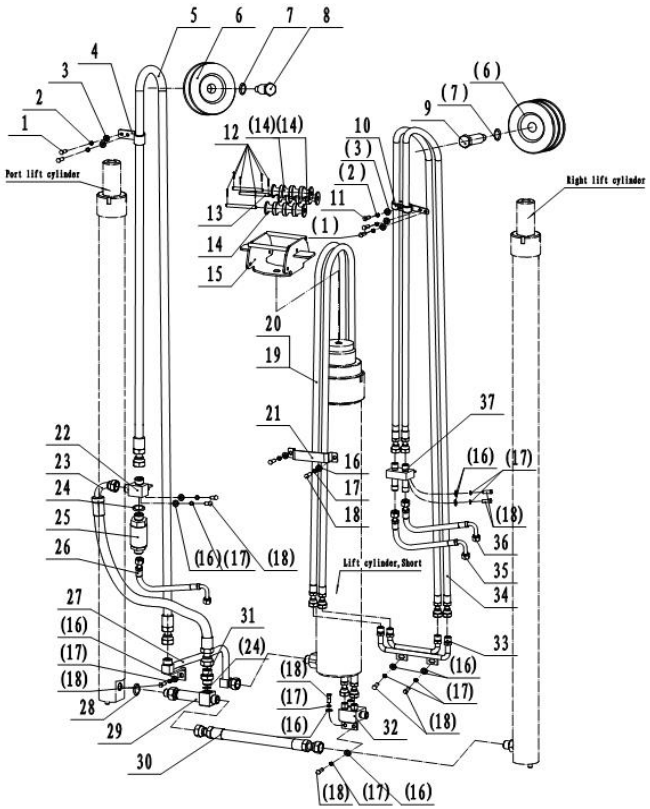


| 序号 Item No. | | 代号 Part No. | 名称 Descripition | | 数量 Q'ty | 备注 Remark |
|---|---|---|---|---|---|---|
| A | | - | Mast hydraulic system | 门架管路系统 | 1 | |
| 25 | | F020-D-8601000-AO | Flow regulator | 限速阀 | 1 | |
| 26 | | RF025-7-8600001-B0 | Oil pipe assy | 多路阀-限速阀胶管 | 1 | |
| 27 | | RF025-4-8804000-B0 | Middle cylinder pipe | 自由缸进油硬管 | 1 | |
| 28 | | GB3452.1-1992 | O-ring 17×2.65 | O形密封圈17×2.65 | 1 | |
| 29 | | F030-D-8602000-AO | Tee connector | 起升缸三通 | 1 | |
| 30 | | RF025-4-8600001-B0 | H.P.hose | 起升缸之间胶管 | 1 | |
| 31 | | F030-D-8800005-A0 | Tee - tee indirect head | 三通-三通间接头 | 1 | |
| 32 | | RF035-4-88S04000-B0 | Four-way Ⅰ | 四通Ⅰ | 1 | |
| 33 | | RF025-4-88S03000-B0 | Side transfer socket | 侧移转接座 | 1 | |
| 34 | | RF025-4-88S04000-B0 | Pulley H.P. hoseⅢ | 侧移胶管Ⅲ | 2 | |
| 35 | | RF025-7-86S00001-B0 | Hose connector | 多路阀-调节硬管胶管Ⅰ | 1 | |
| 36 | | RF025-7-86S00002-B0 | Hose connector | 多路阀-调节硬管胶管Ⅱ | 1 | |
| 37 | | RF035-4-88S07000-B0 | Four-way Ⅱ | 四通 | 1 | |

图34/Fig34. 门架管路系统(三级全自由三联) MAST HYDRAULIC SYSTEM(FULL FREE 3-STAGE MAST Three-THROW)

R2B25-Li

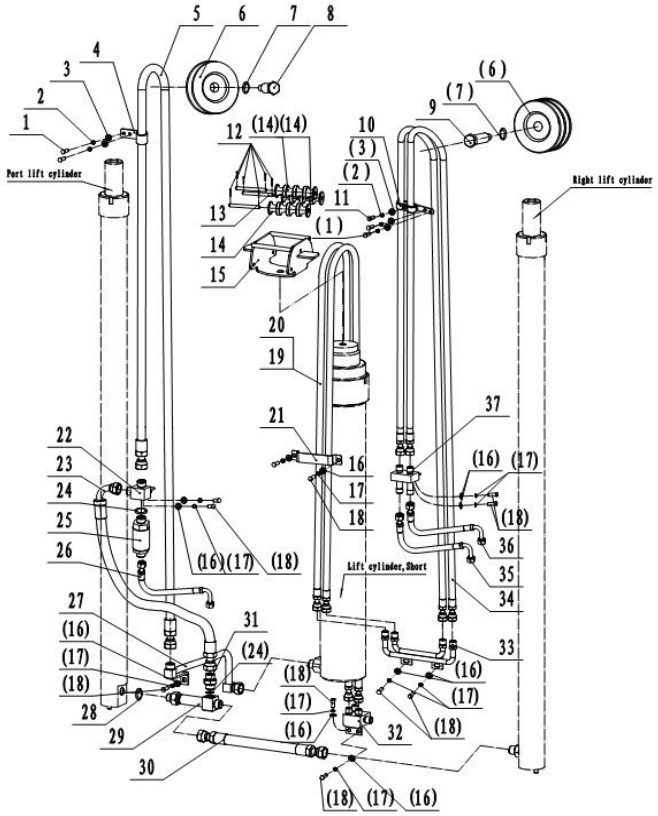


管路系统选用件-侧移胶管Ⅰ、Ⅱ(件19、件20、件34) Sway hose Optional Parts

| 起升高度 LIFTING HEIGHT | | RF025-4-88S01000-B0 Pulley H.P. hose Ⅰ 图号-长度 | RF025-4-88S02000-B0 Pulley H.P. hose Ⅱ 图号-长度 | RF025-4-88S04000-B0 Pulley H.P. hoseⅢ 图号-长度 | |
|---|---|---|---|---|---|
| 3700 | | RF025-4-88S01000-A0/3.7-1725 | RF025-4-88S01000-A0/3.7-1725 | RF025-4-88S04000-A0/3.7-2425 | |
| 4000 | | RF025-4-88S01000-A0/4.0-1833 | RF025-4-88S02000-A0/4.0-1805 | RF025-4-88S04000-A0/4.0-2600 | |
| 4350 | | RF025-4-88S01000-A0/4.35-1960 | RF025-4-88S02000-A0/4.35-1935 | RF025-4-88S04000-A0/4.35-2855 | |
| 4700 | | RF025-4-88S01000-A0/4.7-2075 | RF025-4-88S02000-A0/4.7-2020 | RF025-4-88S04000-A0/4.7-3070 | |
| 4800 | | RF035-4-88S02000-A0/4.7-2105 | RF025-4-88S02000-A0/4.8-2060 | RF025-4-88S04000-A0/4.8-3110 | |
| 5000 | | RF025-4-88S01000-A0/5.0-2210 | RF025-4-88S02000-A0/4.8-2160 | RF025-4-88S04000-A0/5.0-3335 | |
| 5500 | | RF025-4-88S01000-A0/5.5-2345 | RF025-4-88S01000-A0/5.5-2345 | RF025-4-88S04000-A0/5.5-3620 | |
| 6000 | | RF025-4-88S01000-A0/6.0-2515 | RF025-4-88S01000-A0/6.0-2515 | RF025-4-88S04000-A0/6.0-3915 | |

图35/Fig35. 门架管路系统(三级全自由四联) MAST HYDRAULIC SYSTEM(FULL FREE 3-STAGE MAST Four-THROW)

R2B18-Li

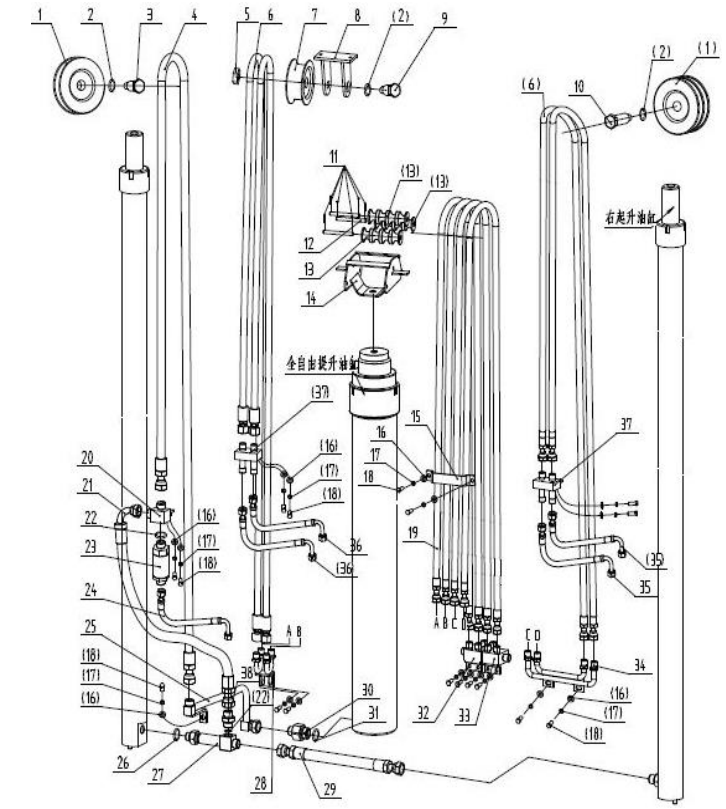


| 序号 Item No. | | 代号 Part No. | 名称 Descripition | | 数量 Q'ty | 备注 Remark |
|---|---|---|---|---|---|---|
| A | | - | Mast hydraulic system | 门架管路系统 | 1 | |
| 01 | | RF035-4-8800004-A0 | Pulley | 滑轮 | 3 | |
| 02 | | RF035-4-8800003-A0 | Sleeve | 隔套 | 5 | |
| 03 | | RF035-4-8800002-A0 | Step Bolt | 台阶螺栓 | 1 | |
| 04 | | RF018-7-8801000-B0 | Middle cylinder H.P. hose | 全自由缸进油胶管 | 1 | |
| 05 | | GB/T6170-2000 | Nut M8 | 螺母M8 | 1 | |
| 06 | | RF018-7-88S04000-B0 | Pulley H.P. hoseⅡ | 侧移胶管Ⅱ | 4 | |
| 07 | | RF018-7-88SS00001-A0 | Pulley | 单滑轮 | 1 | |
| 08 | | RF018-7-88SS01000-A0 | Roller bracket | 滑轮支架 | 1 | |
| 09 | | RF018-7-88SS00002-A0 | Step Bolt | 台阶螺栓 | 1 | |
| 10 | | RF035-4-88S00001-A0 | Step Bolt | 台阶螺栓 | 1 | |
| 11 | | GB/T91-2000 | Cotter pin 2×14 | 开口销2×14 | 6 | |
| 12 | | GB/T880-1986 | Shaft Φ8×120 | 轴φ8×120 | 3 | |
| 13 | | RF035-4-88S00003-A0 | Pulley | 滑轮 | 3 | |
| 14 | | RF018-7-88S01000-A0 | Roller bracket | 滚轮支架 | 1 | |
| 15 | | RF035-4-88S00004-A0 | Clip | 管夹 | 1 | |
| 16 | | GB/T97.1-2002 | Washer 8 | 垫圈8 | 19 | |
| 17 | | GB/T93-1987 | Washer 8 | 垫圈8 | 19 | |
| 18 | | GB/T5783-2000 | Bolt M8×16 | 螺栓M8×16 | 19 | |
| 19 | | RF018-7-88S02000-B0 | Pulley H.P. hoseⅠ | 侧移胶管Ⅰ | 4 | |
| 20 | | RF035-4-8804000-B0 | Flow regulator tee connector | 限速阀三通 | 1 | |
| 21 | | RF035-4-8800005-B0 | H.P.hose | 三通-三通间胶管 | 1 | |
| 22 | | GB1235-76 | O-ring 24×2.4 | O形圈24×2.4 | 2 | |
| 23 | | RF018-7-8601000-B0 | Flow regulator | 限速阀 | 1 | |
| 24 | | RF025-7-8600001-B0 | Flow regulator H.P. hose | 多路阀-限速阀胶管 | 1 | |

图35/Fig35. 门架管路系统(三级全自由四联) MAST HYDRAULIC SYSTEM(FULL FREE 3-STAGE MAST Four-THROW)

R2B18-Li

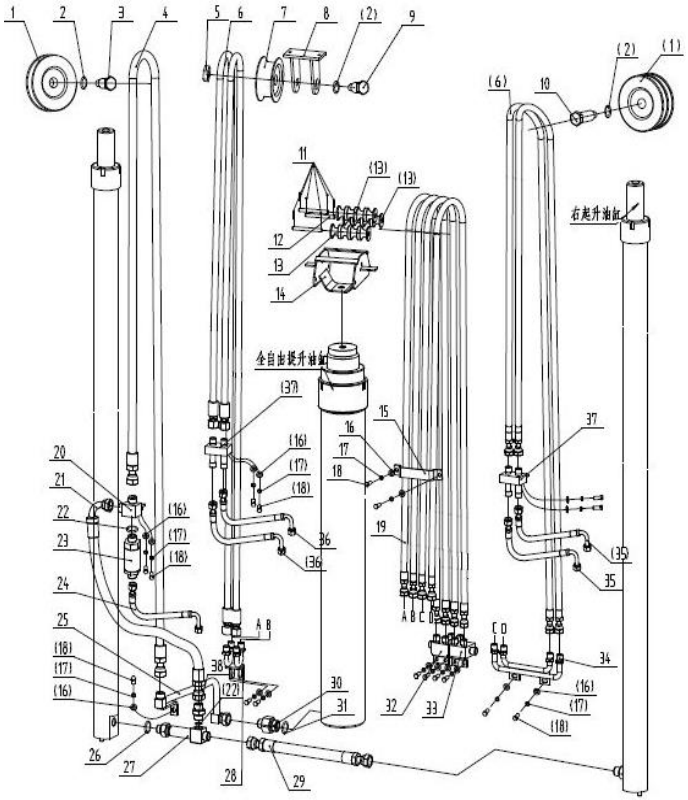


| 序号 Item No. | | 代号 Part No. | 名称 Descripition | | 数量 Q'ty | 备注 Remark |
|---|---|---|---|---|---|---|
| A | | - | Mast hydraulic system | 门架管路系统 | 1 | |
| 25 | | RF018-7-8802000-B0 | Middle cylinder pipe | 自由缸进油硬管 | 1 | |
| 26 | | GB/T3452.1-1992 | O-seal ring 17×2.65 | O形密封圈17×2.65 | 1 | |
| 27 | | F030-D-8602000-AO | Lift cylinder tee connector | 起升缸三通 | 1 | |
| 28 | | RF018-7-88SS02000-B0 | Connecting pipe | 调距转接座 | 1 | |
| 29 | | RF018-7-8600001-B0 | H.P.hose | 起升缸之间胶管 | 1 | |
| 30 | | RF018-7-8800001-B0 | Middle cylinder connector | 自由缸接头 | 1 | |
| 31 | | GB1235-76 | O-ring 30×3.1 | O形圈 30×3.1 | 1 | |
| 32 | | RF035-4-88SS02000-B0 | Four-way ⅡⅡ | 四通Ⅱ | 1 | |
| 33 | | RF035-4-88S04000-B0 | Four-way ⅡⅠ | 四通Ⅰ | 1 | |
| 34 | | RF018-7-88S03000-B0 | Connecting pipe | 侧移转接座 | 1 | |
| 35 | | RF025-7-86S00001-B0 | Adguesting H.P.hoseⅠ | 多路阀-调节硬管胶管Ⅰ | 1 | |
| (35) | | RF025-7-86S00002-B0 | Adguesting H.P.hoseⅡ | 多路阀-调节硬管胶管Ⅱ | 1 | |
| 36 | | RF025-7-86SS00001-B0 | Adguesting H.P.hoseⅡ | 多路阀-调节硬管胶管 | 1 | |
| (36) | | RF025-7-86SS00002-B0 | Adguesting H.P.hoseⅡ | 多路阀-调节硬管胶管 | 1 | |
| 37 | | RF035-4-88S07000-B0 | Four-way Ⅱ | 四通 | 2 | |
| 38 | | F030-D-8800005-A0 | tee connector | 三通-三通间接头 | 1 | |

图36/Fig36. 门架管路系统(三级全自由四联) MAST HYDRAULIC SYSTEM(FULL FREE 3-STAGE MAST Four-THROW)

R2B25-Li

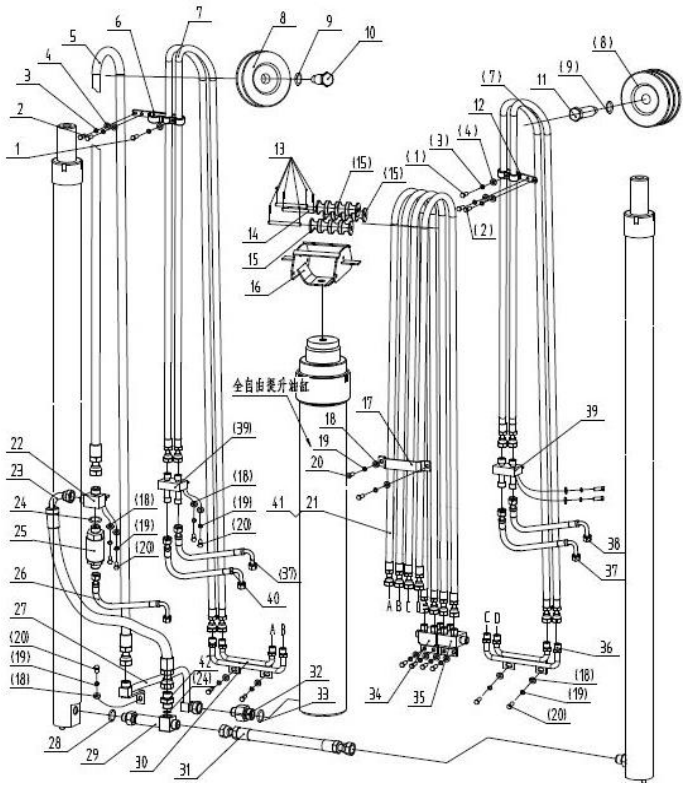


| 序号 Item No. | | 代号 Part No. | 名称 Descripition | | 数量 Q'ty | 备注 Remark |
|---|---|---|---|---|---|---|
| A | | - | Mast hydraulic system | 门架管路系统 | 1 | |
| 01 | | GB/T5783-2000 | Bolt M6×25 | 螺栓M6×25 | 2 | |
| 02 | | GB/T5783-2000 | Bolt M6×12 | 螺栓M6×12 | 4 | |
| 03 | | GB/T93-1987 | Washer 6 | 垫圈6 | 6 | |
| 04 | | GB/T97.1-2002 | Washer 6 | 垫圈6 | 6 | |
| 05 | | RF025-4-8801000-B0 | Middle cylinder H.P. hose | 全自由缸进油胶管 | 1 | 2.5t |
| 06 | | RF035-4-88SS00001-A0 | Clip | 管夹 | 1 | |
| 07 | | RF025-4-88S04000-B0 | Pulley H.P. hoseⅡ | 侧移胶管Ⅱ | 4 | 2.5t |
| 08 | | RF035-4-8800004-A0 | Pulley | 滑轮 | 5 | |
| 09 | | RF035-4-8800003-A0 | Sleeve | 隔套 | 7 | |
| 10 | | RF035-4-88SS00002-A0 | Step Bolt | 台阶螺栓 | 1 | |
| 11 | | RF035-4-88S00001-A0 | Step Bolt | 台阶螺栓 | 1 | |
| 12 | | RF035-4-88S00002-A0 | Clip | 管夹 | 1 | |
| 13 | | GB/T91-2000 | Cotter pin 2×14 | 开口销2×14 | 6 | |
| 14 | | GB/T880-2008 | Shaft Φ8×120 | 轴φ8×120 | 3 | |
| 15 | | RF035-4-88S00003-A0 | Pulley | 滑轮 | 3 | |
| 16 | | RF035-4-88S01000-A0 | Roller bracket | 滚轮支架 | 1 | |
| 17 | | RF035-4-88S00004-A0 | Clip | 管夹 | 1 | |
| 18 | | GB/T97.1-2002 | Washer 8 | 垫圈8 | 11 | |
| 19 | | GB/T93-1987 | Washer 8 | 垫圈8 | 11 | |
| 20 | | GB/T5783-2000 | Bolt M8×16 | 螺栓M8×16 | 11 | |
| 21 | | RF025-4-88S01000-B0 | Pulley H.P. hoseⅠ | 侧移胶管Ⅰ | 4 | 2.5t(内置侧移不用) |
| 22 | | RF025-4-88S02000-B0 | Pulley H.P. hoseⅢ | 侧移胶管Ⅲ | 4 | 2.5t(内置侧移不用) |
| 23 | | RF035-4-8804000-B0 | Flow regulator tee connector | 限速阀三通 | 1 | |
| 24 | | RF035-4-8800005-B0 | Tee - tee hose | 三通-三通间胶管 | 1 | |

图36/Fig36. 门架管路系统(三级全自由四联) MAST HYDRAULIC SYSTEM(FULL FREE 3-STAGE MAST Four-THROW)

R2B25-Li

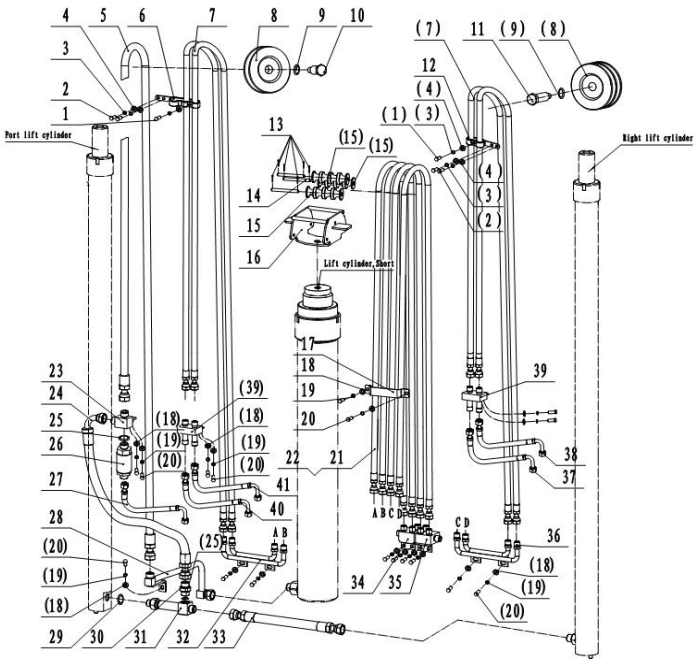


| 序号 Item No. | | 代号 Part No. | 名称 Descripition | | 数量 Q'ty | 备注 Remark |
|---|---|---|---|---|---|---|
| A | | - | Mast hydraulic system | 门架管路系统 | 1 | |
| 25 | | GB1235-76 | O-ring 24×2.4 | O形圈 24×2.4 | 2 | |
| 26 | | F020-D-8601000-AO | Flow regulator | 限速阀 | 1 | 2.5t |
| 27 | | RF025-7-8600001-B0 | Oil pipe assy | 多路阀-限速阀胶管 | 1 | |
| 28 | | RF025-4-8804000-B0 | Middle cylinder pipe | 自由缸进油硬管 | 1 | 2.5t |
| 29 | | GB3452.1-1992 | O-seal ring 17×2.65 | O形密封圈17×2.65 | 1 | |
| 30 | | F030-D-8800005-A0 | Tee - tee indirect head | 三通-三通间接头 | 1 | |
| 31 | | F030-D-8602000-AO | Tee connector | 起升缸三通 | 1 | |
| 32 | | RF025-4-88SS01000-B0 | Connecting pipe | 调距转接座 | 1 | 2.5t |
| 33 | | RF025-4-8600001-B0 | H.P.hose | 起升缸之间胶管 | 1 | 2.5t |
| 34 | | RF035-4-88SS02000-B0 | Cross connectorⅡ | 四通Ⅱ | 1 | |
| 35 | | RF035-4-88S04000-B0 | Cross connectorⅠ | 四通Ⅰ | 1 | |
| 36 | | RF025-4-88S03000-B0 | Side transfer socket | 侧移转接座 | 1 | 2.5t |
| 37 | | RF025-7-86S00001-B0 | Hose connector | 多路阀-调节硬管胶管Ⅰ | 1 | |
| 38 | | RF025-7-86S00002-B0 | Hose connector | 多路阀-调节硬管胶管Ⅱ | 1 | |
| 39 | | RF035-4-88S07000-B0 | Four-way Ⅱ | 四通 | 2 | |
| 40 | | RF025-7-86SS00001-B0 | Hose connector | 多路阀-调节硬管胶管Ⅰ | 1 | |
| 41 | | RF025-7-86SS00002-B0 | Hose connector | 多路阀-调节硬管胶管Ⅱ | 1 | |

图37/Fig37. 货叉/FORK

R2B18-Li R2B25-Li

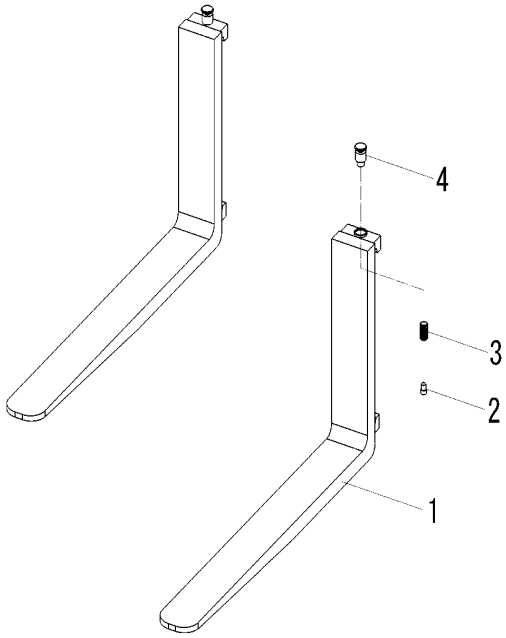


| 序号 Item No. | | 代号 Part No. | 名称 Descripition | | 数量 Q'ty | 备注 Remark |
|---|---|---|---|---|---|---|
| 01 | | RF018-7-8003000-A0 | Fork ass'y | 货叉总成 | 2 | 1.8t |
| - | | RF025-4-8003000-A0 | Fork ass'y | 货叉总成 | 2 | 2.5t |
| 02 | | RF018-7-8003001-A0 | Positioning pin | 定位销 | 2 | 1.8t |
| - | | RF025-4-8003001-A0 | Positioning pin | 定位销 | 2 | 2.5t |
| 03 | | RF018-7-8003002-A0 | Spring | 弹簧 | 2 | 1.8t |
| - | | RF025-4-8003002-A0 | Spring | 弹簧 | 2 | 2.5t |
| 04 | | RF018-7-8003003-A0 | Handle | 把手 | 2 | 1.8t |
| - | | RF025-4-8003003-A0 | Handle | 把手 | 2 | 2.5t |

图37/Fig37. 货叉/FORK

R2B18-Li R2B25-Li

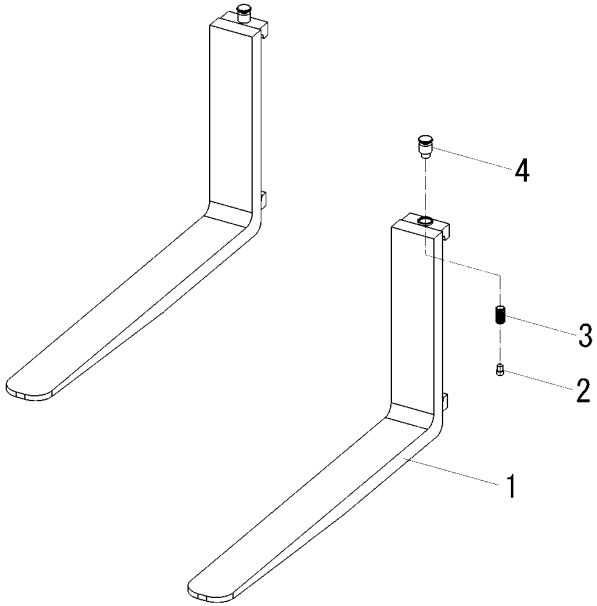


货叉选用表 Fork optional parts

| 长度LENGTH | | 货叉代号 PART NO. | | | | 备注 REMARK |
|---|---|---|---|---|---|---|
| | | 1.8t | 2.5t | | | |
| 920 | | RF018-7-8003000-A0/1 | RF025-4-8003000-A0/1 | | | |
| 1070 | | RF018-7-8003000-A0/2 | RF025-4-8003000-A0/2 | | | 标准 |
| 1220 | | RF018-7-8003000-A0/3 | RF025-4-8003000-A0/3 | | | |
| 1370 | | RF018-7-8003000-A0/4 | RF025-4-8003000-A0/4 | | | |
| 1520 | | RF018-7-8003000-A0/5 | RF025-4-8003000-A0/5 | | | |
| 1670 | | RF018-7-8003000-A0/6 | RF025-4-8003000-A0/6 | | | |
| 1820 | | RF018-7-8003000-A0/7 | RF025-4-8003000-A0/7 | | | |
| 1970 | | RF018-7-8003000-A0/8 | RF025-4-8003000-A0/8 | | | |
| 2000 | | RF018-7-8003000-A0/9 | RF025-4-8003000-A0/9 | | | |
| 2120 | | RF018-7-8003000-A0/10 | RF025-4-8003000-A0/10 | | | |
| 2440 | | RF018-7-8003000-A0/11 | RF025-4-8003000-A0/11 | | | |
| 2500 | | RF018-7-8003000-A0/12 | RF025-4-8003000-A0/12 | | | |

图38/Fig38. 货叉架(基本)/FORK CARRIAGE (NORMAL MAST)

R2B18-Li R2B25-Li

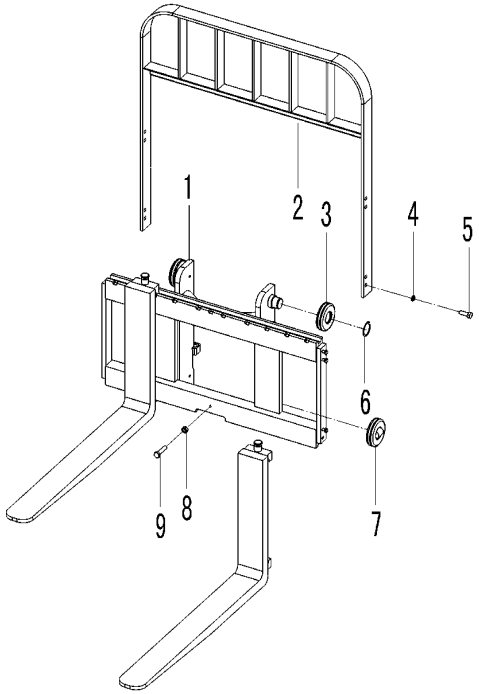


| 序号 Item No. | | 代号 Part No. | 名称 Descripition | | 数量 Q'ty | 备注 Remark |
|---|---|---|---|---|---|---|
| 01 | | RF018-7-8004000-A0 | Fork carriage | 滑架 | 1 | 1.8t |
| - | | RF025-4-8004000-A0 | Fork carriage | 滑架 | 1 | 2.5t |
| 02 | | RF025-4-8002000-A0 | Backrest | 挡货架 | 1 | 1.8t |
| - | | RF025-4-8002000-A0 | Backrest | 挡货架 | 1 | 2.5t |
| 03 | | RF035-4-8011000-A0 | Roller 130309KT | 单滚轮130309KT | 2 | 2.5t |
| 04 | | GB/T93-1987 | Washer 14 | 垫圈14 | 8 | |
| 05 | | GB/T5786-2000 | Bolt M14×1.5×25 | 螺栓M14×1.5×25 | 8 | |
| 06 | | GB/T894.1-2000 | Snap ring 45 | 挡圈45 | 2 | 2.5t |
| 07 | | RF018-7-8009000-A0 | Combination roller 760211K1T | 复合滚轮760211K1T | 6 | 1.8t |
| - | | RF035-4-8010000-A0 | Combination roller 760311NT | 复合滚轮760311NT | 4 | 2.5t |
| 08 | | GB/T6170-2000 | Nut M10 | 螺母 M10 | 1 | |
| 09 | | GB/T5783-2000 | Bolt M10×30 | 螺栓 M10×30 | 1 | |

图39/Fig39. 货叉架(三级全自由)/LIFT BRACKET (FULL FREE 3 STAGE MAST)

R2B18-Li R2B25-Li

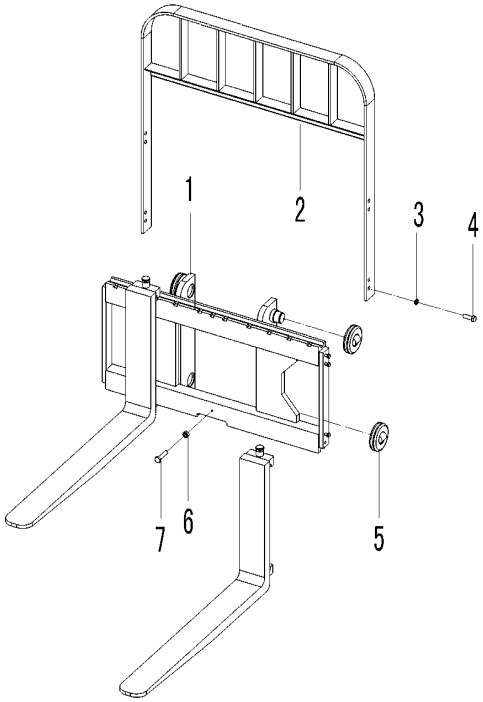


| 序号 Item No. | | 代号 Part No. | 名称 Descripition | | 数量 Q'ty | 备注 Remark |
|---|---|---|---|---|---|---|
| 01 | | RF018-7-8401000-A0 | Fork carriage | 滑架 | 1 | 1.8t |
| - | | RF025-4-8402000-A0 | Fork carriage | 滑架 | 1 | 2.5t |
| 02 | | RF025-4-8002000-A0 | Backrest | 挡货架 | 1 | 1.8t |
| - | | RF025-4-8002000-A0 | Backrest | 挡货架 | 1 | 2.5t |
| 03 | | GB/T93-1987 | Washer 14 | 垫圈14 | 8 | |
| 04 | | GB/T5786-2000 | Bolt M14×1.5×25 | 螺栓M14×1.5×25 | 8 | |
| 05 | | RF018-7-8009000-A0 | Combination roller 760211K1T | 复合滚轮760211K1T | 6 | 1.8t |
| - | | RF035-4-8010000-A0 | Combination roller 760311NT | 复合滚轮760311NT | 4 | 2.5t |
| 06 | | GB/T6170-2000 | Nut M10 | 螺母 M10 | 1 | |
| 07 | | GB/T5783-2000 | Bolt M10×30 | 螺栓 M10×30 | 1 | |

图40/Fig40. 门架(基本型)/MAST(NORMAL MAST)

R2B18-Li R2B25-Li

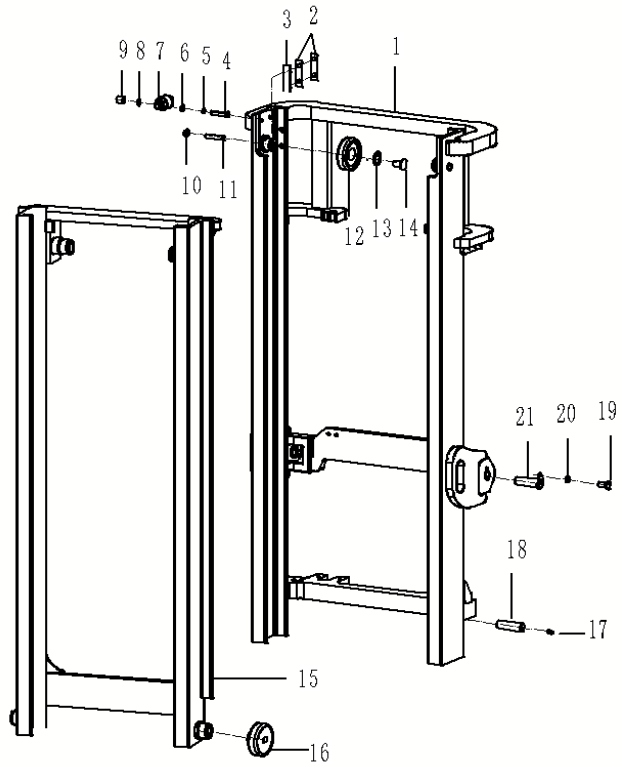


| 序号 Item No. | | 代号 Part No. | 名称 Descripition | | 数量 Q'ty | 备注 Remark |
|---|---|---|---|---|---|---|
| 01 | | RF018-7-8007000-A0 | Outer mast ass'y | 外门架总成 | 1 | 1.8t |
| - | | RF025-7-8001000-A0 | Outer mast ass'y | 外门架总成 | 1 | 2.5t |
| 02 | | RF035-4-8000004-A0 | Auguesting washer I | 调整垫片I | 2组 | |
| 03 | | RF035-4-8000005-A0 | Slipper | 滑块 | 2 | |
| 04 | | GB/T5785-2000 | Bolt M10×1.25×45 | 螺栓M10×1.25×45 | 4 | 2.5t |
| 05 | | GB/T93-1987 | Washer 10 | 垫圈 10 | 4 | 2.5t |
| 06 | | GB/T97.1-2000 | Washer 10 | 垫圈 10 | 4 | 2.5t |
| 07 | | RF035-4-8012000-A0 | Side roller C2-3 | 侧滚轮C2-3 | 2 | 2.5t |
| 08 | | RF035-4-8000002-A0 | Washer | 垫圈 | 4 | 2.5t |
| 09 | | RF035-4-8000007-A0 | Auguesting washer II | 调整垫片II | 2组 | 2.5t |
| 10 | | GB/T6171-2000 | Nut M10×1 | 螺母M10×1 | 2 | 2.5t |
| 11 | | GB/T77-2000 | Screw M10×1×45 | 螺钉M10×1×45 | 2 | 2.5t |
| 12 | | RF018-7-8009000-A0 | mbination roller 760211K1T | 复合滚轮760211K1T | 2 | 1.8t |
| - | | RF035-4-8011000-A0 | Roller 130309KT | 单滚轮130309KT | 2 | 2.5t |
| 13 | | GB/T894.1-2000 | Snap ring 45 | 挡圈45 | 2 | 2.5t |
| 14 | | RF035-4-8000012-A0 | Shim | 调整垫 | 2 | 2.5t |
| 15 | | RF018-7-8006000-A0 | Inter mast ass'y | 内门架总成 | 1 | 1.8t |
| - | | RF025-4-8006000-A0 | Inter mast ass'y | 内门架总成 | 1 | 2.5t |
| 16 | | RF018-7-8009000-A0 | mbination roller 760211K1T | 复合滚轮760211K1T | 2 | 1.8t |
| - | | RF035-4-8010000-A0 | ombination roller 760311NT | 复合滚轮760311NT | 2 | 2.5t |
| 17 | | GB/T1152-2000 | Nipple M10×1 | 油杯 M10×1 | 2 | |
| 18 | | RF025-7-8000001-A0 | support shaft | 轴 | 2 | |
| 19 | | GB/T5783-2000 | Bolt M10×20 | 螺栓 M10×20 | 2 | |
| 20 | | GB/T93-1987 | Washer 10 | 垫圈 10 | 4 | |
| 21 | | RF035-4-8014000-A0 | Pin shaft | 销轴 | 2 | |

图40/Fig40. 门架(基本型)/MAST(NORMAL MAST)

R2B18-Li R2B25-Li

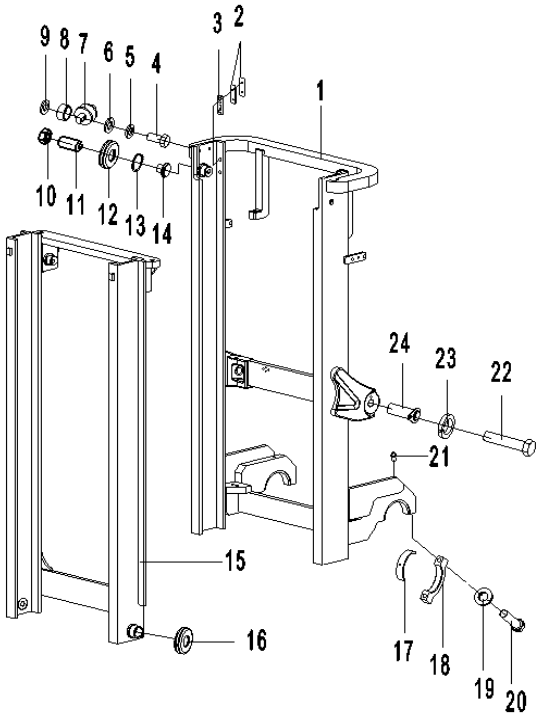


门架选用表 Mast Opitional Parts

| 起升高度LIFTING HEIGHT | | 外门架总成 OUTER MAST ASS'Y | | | | 备注 REMARK |
|---|---|---|---|---|---|---|
| | | 1.8t | 2.5t | | | |
| 2700 | | RF018-7-8007000-A0/2.7 | RF025-7-8001000-A0/2.7 | | | |
| 3000 | | RF018-7-8007000-A0/3.0 | RF025-7-8001000-A0/3.0 | | | 标准 |
| 3300 | | RF018-7-8007000-A0/3.3 | RF025-7-8001000-A0/3.3 | | | |
| 3500 | | RF018-7-8007000-A0/3.5 | RF025-7-8001000-A0/3.5 | | | |
| 3700 | | RF018-7-8007000-A0/3.7 | RF025-7-8001000-A0/3.7 | | | |
| 4000 | | RF018-7-8007000-A0/4.0 | RF025-7-8001000-A0/4.0 | | | |
| 4500 | | RF018-7-8007000-A0/4.5 | RF025-7-8001000-A0/4.5 | | | |

图40/Fig40. 门架(基本型)/MAST(NORMAL MAST)

R2B18-Li R2B25-Li

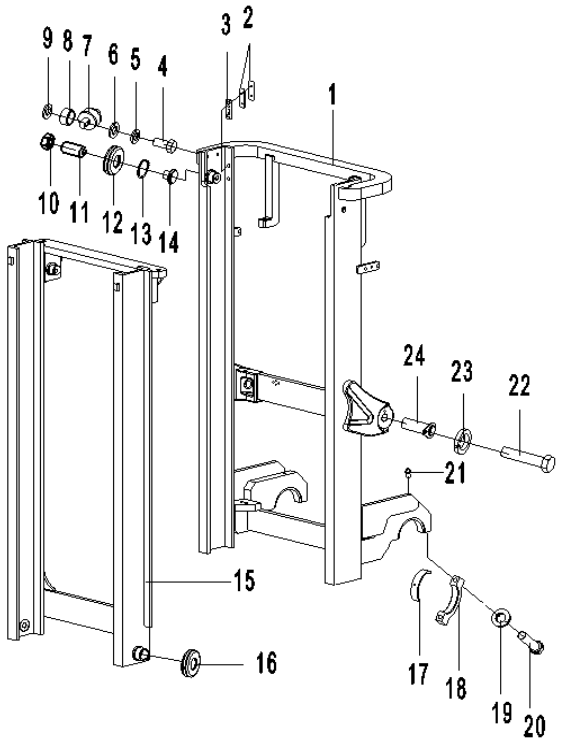


门架选用表 Mast Opitional Parts

| 起升高度LIFTING HEIGHT | | 内门架总成 INNER MAST ASS'Y | | | | 备注REMARK |
|---|---|---|---|---|---|---|
| | | 1.8t | 2.5t | | | |
| 2700 | | RF018-7-8006000-A0/2.7 | RF025-4-8006000-A0/2.7 | | | |
| 3000 | | RF018-7-8006000-A0/3.0 | RF025-4-8006000-A0/3.0 | | | 标准 |
| 3300 | | RF018-7-8006000-A0/3.3 | RF025-4-8006000-A0/3.3 | | | |
| 3500 | | RF018-7-8006000-A0/3.5 | RF025-4-8006000-A0/3.5 | | | |
| 3700 | | RF018-7-8006000-A0/3.7 | RF025-4-8006000-A0/3.7 | | | |
| 4000 | | RF018-7-8006000-A0/4.0 | RF025-4-8006000-A0/4.0 | | | |
| 4500 | | RF018-7-8006000-A0/4.5 | RF025-4-8006000-A0/4.5 | | | |

图41/Fig41. 门架(三级全自由)/MAST(FULL FREE 3-STAGE MAST)

R2B18-Li R2B25-Li

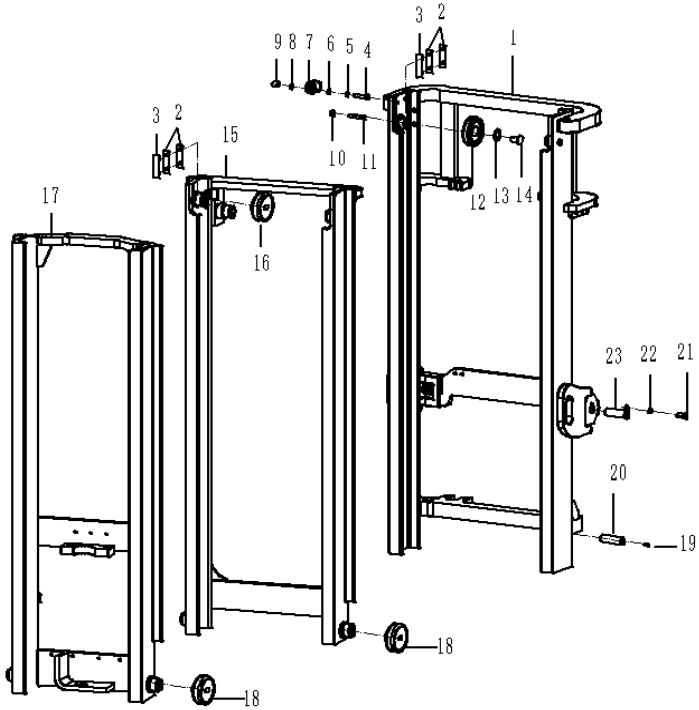


| 序号 Item No. | | 代号 Part No. | 名称 Descripition | | 数量 Q'ty | 备注 Remark |
|---|---|---|---|---|---|---|
| 01 | | RF018-7-8405000-A0 | Qutside mast | 外门架总成 | 1 | 1.8T |
| - | | RF025-7-8401000-A0 | Qutside mast | 外门架总成 | 1 | 2.5T |
| 02 | | RF035-4-8000004-A0 | Auguesting washer I | 调整垫片I | 4组 | |
| 03 | | RF035-4-8000005-A0 | Slipper | 滑块 | 4组 | |
| 04 | | GB/T5785-2000 | Bolt M10×1.25×45 | 螺栓M10×1.25×45 | 4 | 2.5t |
| 05 | | GB/T93-1987 | Washer 10 | 垫圈 10 | 4 | 2.5t |
| 06 | | GB/T97.1-2000 | Washer 10 | 垫圈 10 | 4 | 2.5t |
| 07 | | RF035-4-8012000-A0 | Side roller C2-3 | 侧滚轮C2-3 | 2 | 2.5t |
| 08 | | RF035-4-8000002-A0 | Washer | 垫圈 | 4 | 2.5t |
| 09 | | RF035-4-8000007-A0 | Auguesting washer II | 调整垫片II | 2组 | 2.5t |
| 10 | | GB/T6171-2000 | Nut M10×I | 螺母M10×1 | 2 | 2.5t |
| 11 | | GB/T77-2000 | Screw M10×1×45 | 螺钉M10×1×45 | 2 | 2.5t |
| 12 | | RF018-7-8009000-A0 | mbination roller 760211K1T | 复合滚轮760211K1T | 2 | 1.8t |
| - | | RF035-4-8011000-A0 | Roller 130309KT | 单滚轮130309KT | 2 | 2.5t |
| 13 | | GB/T894.1-2000 | Snap ring 45 | 挡圈45 | 2 | 2.5t |
| 14 | | RF035-4-8000012-A0 | Shim | 调整垫 | 2 | 2.5t |
| 15 | | RF018-7-8404000-A0 | Middle mast | 中门架总成 | 1 | 1.8t |
| - | | RF025-4-8405000-A0 | Middle mast | 中门架总成 | 1 | 2.5t |
| 16 | | RF018-7-8009000-A0 | mbination roller 760211K1T | 复合滚轮760211K1T | 2 | 1.8t |
| - | | RF035-4-8408000-A0 | Composite liner760211NT | 复合滚轮760211NT | 2 | 2.5t |
| 17 | | RF018-7-8403000-A0 | Lnside mast | 内门架总成 | 1 | 1.8t |
| - | | RF025-4-8404000-A0 | Lnside mast | 内门架总成 | 1 | 2.5t |
| 18 | | RF018-7-8009000-A0 | mbination roller 760211K1T | 复合滚轮760211K1T | 4 | 1.8t |
| - | | RF035-4-8010000-A0 | Composite liner760311NT | 复合滚轮760311NT | 4 | 2.5t |
| 19 | | GB/T1152-2000 | Nipple M10×1 | 油杯 M10×1 | 2 | |

图41/Fig41. 门架(三级全自由)/MAST(FULL FREE 3-STAGE MAST)

R2B18-Li R2B25-Li

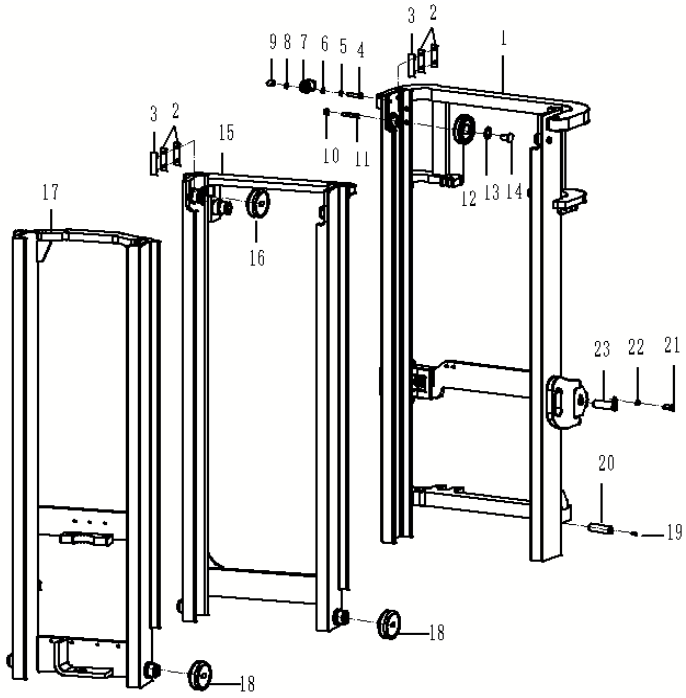


| 序号 Item No. | | 代号 Part No. | 名称 Descripition | | 数量 Q'ty | 备注 Remark |
|---|---|---|---|---|---|---|
| 20 | | RF025-7-8000001-A0 | support shaft | 轴 | 2 | |
| 21 | | GB/T5783-2000 | Bolt M10×20 | 螺栓 M10×20 | 2 | |
| 22 | | GB/T93-1987 | Washer 10 | 垫圈 10 | 4 | |
| 23 | | RF035-4-8014000-A0 | Pin shaft | 销轴 | 2 | |

图41/Fig41. 门架(三级全自由)/MAST(FULL FREE 3-STAGE MAST)

R2B18-Li

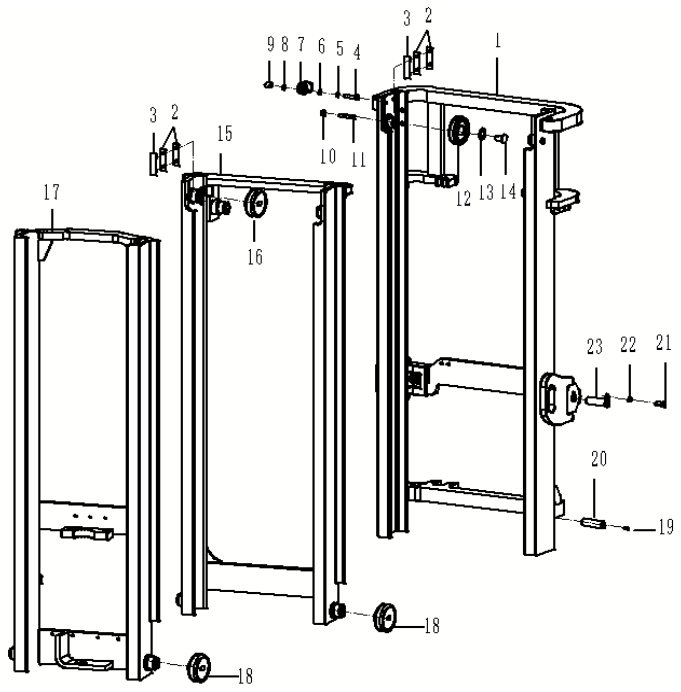


门架选用表 Mast Opitional Parts

| 起升高度LIFTING HEIGHT | | 1.8t门架总成 MAST ASS'Y | | | | 备注 REMARK |
|---|---|---|---|---|---|---|
| | | 内门架 Inter mast ass'y | 中门架 Middle mast ass'y | 外门架 Outer mast ass'y | | |
| 3600 | | RF018-7-8403000-A0/3.6 | RF018-7-8404000-A0/3.6 | RF018-7-8405000-A0/3.6 | | |
| 4000 | | RF018-7-8403000-A0/4.0 | RF018-7-8404000-A0/4.0 | RF018-7-8405000-A0/4.0 | | 标准 |
| 4350 | | RF018-7-8403000-A0/4.35 | RF018-7-8404000-A0/4.35 | RF018-7-8405000-A0/4.35 | | |
| 4500 | | RF018-7-8403000-A0/4.5 | RF018-7-8404000-A0/4.5 | RF018-7-8405000-A0/4.5 | | |
| 4800 | | RF018-7-8403000-A0/4.8 | RF018-7-8404000-A0/4.8 | RF018-7-8405000-A0/4.8 | | |
| 5000 | | RF018-7-8403000-A0/5.0 | RF018-7-8404000-A0/5.0 | RF018-7-8405000-A0/5.0 | | |
| 5500 | | RF018-7-8403000-A0/5.5 | RF018-7-8404000-A0/5.5 | RF018-7-8405000-A0/5.5 | | |
| 6000 | | RF018-7-8403000-A0/6.0 | RF018-7-8404000-A0/6.0 | RF018-7-8405000-A0/6.0 | | |
| 6500 | | RF018-7-8403000-A0/6.5 | RF018-7-8404000-A0/6.5 | RF018-7-8405000-A0/6.5 | | |

图41/Fig41. 门架(三级全自由)/MAST(FULL FREE 3-STAGE MAST)

R2B25-Li

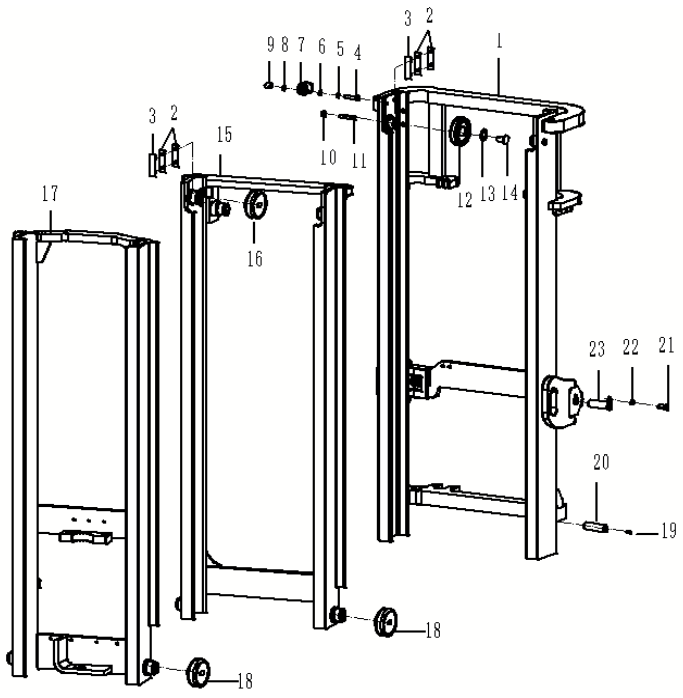


门架选用表 Mast Opitional Parts

| 起升高度LIFTING HEIGHT | | 2.5t门架总成 MAST ASS'Y | | | | 备注 REMARK |
|---|---|---|---|---|---|---|
| | | 内门架 Inter mast ass'y | 中门架 Middle mast ass'y | 外门架 Outer mast ass'y | | |
| 3700 | | RF025-4-8404000-A0/3.7 | RF025-4-8405000-A0/3.7 | RF025-7-8401000-A0/3.7 | | |
| 4000 | | RF025-4-8404000-A0/4.0 | RF025-4-8405000-A0/4.0 | RF025-7-8401000-A0/4.0 | | 标准 |
| 4350 | | RF025-4-8404000-A0/4.35 | RF025-4-8405000-A0/4.35 | RF025-7-8401000-A0/3.45 | | |
| 4700 | | RF025-4-8404000-A0/4.7 | RF025-4-8405000-A0/4.7 | RF025-7-8401000-A0/4.7 | | |
| 5000 | | RF025-4-8404000-A0/5.0 | RF025-4-8405000-A0/5.0 | RF025-7-8401000-A0/5.0 | | |
| 5500 | | RF025-4-8404000-A0/5.5 | RF025-4-8405000-A0/5.5 | RF025-7-8401000-A0/5.5 | | |
| 6000 | | RF025-4-8404000-A0/6.0 | RF025-4-8405000-A0/6.0 | RF025-7-8401000-A0/6.0 | | |

图42/FIG42. 起升油缸(基本型)/LIFT CYLINDER(NORMAL MAST)

R2B18-Li

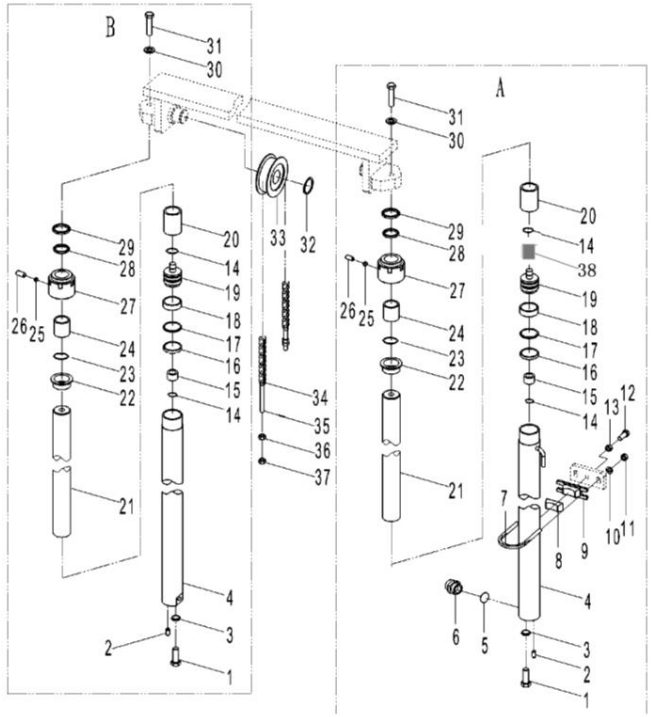


| 序号 Item No. | | 代号 Part No. | 名称 Description | | 数量 Q'ty | 备注 Remark |
|---|---|---|---|---|---|---|
| A | | RF018-7-8008000-A0 | Lift cylinder(right) | 右起升油缸 | 1 | |
| B | | RF018-7-8005000-A0 | Lift cylinder(left) | 左起升油缸 | 1 | |
| 1 | | GB/T5786-2000 | Bolt M12×1.25×25 | 螺栓M12×1.25×25 | 2 | |
| 2 | | GB/T119-86 | Pin 10×25 | 圆柱销10×25 | 2 | |
| 3 | | GB/T93-1987 | Washer 12 | 垫圈 12 | 2 | |
| 4 | | M152J01-100 | Cylinder body | 缸体 | 2 | |
| 5 | | GB1235-76 | O-ring 22×2.4 | O形圈22×2.4 | 1 | |
| 6 | | Max020-SV100 | Safety valve | 防爆阀 | 1 | |
| 7 | | RF018-7-8000001-A0 | Hoop | 箍 | 2 | |
| 8 | | RF035-4-8000010-A0 | Rubber pad | 橡胶套 | 2 | |
| 9 | | RF018-7-8000002-A0 | Hoop seat | 箍座 | 2 | |
| 10 | | GB/T97.1-2000 | Washer 10 | 垫圈 10 | 4 | |
| 11 | | GB/T6171-2000 | Nut M10×1.25 | 螺母M10×1.25 | 4 | |
| 12 | | GB/T5786-2000 | Bolt M12×1.25×30 | 螺栓 M12×1.25×30 | 2 | |
| 13 | | GB/T6171-2000 | Nut M12×1.25 | 螺母M12×1.25 | 2 | |
| 14 | | GB/T895.1-86 | Snap spring 24 | 钢丝挡圈24 | 2 | |
| 15 | | TLC-15T03 | Sleeve | 阀套 | 2 | |
| 16 | | OSI 45 | Packing 45×35×6 | 孔封45×35×6 | 2 | |
| 17 | | Max030-06-001 | Snap spring φ45× φ35×3 | 挡圈φ45× φ35×3 | 2 | |
| 18 | | Max152J01B-001 | Bush bearing ring D45×8×2.5 | 孔用支承环D45×8×2.5 | 2 | |
| 19 | | TLC-15T02 | Piston | 活塞 | 2 | |
| 20 | | TLC-20T11 | Sleeve φ35×50 | 隔套φ35×50 | 按需 | |
| 21 | | M152J01-1 | Piston rod | 活塞杆 | 2 | |
| 22 | | TLC-15T06 | Bushing | 衬套 | 2 | |
| 23 | | GB1235-76 | O-ring 49.7×3.5 | O型圈49.7×3.5 | 2 | |

图42/FIG42. 起升油缸(基本型)/LIFT CYLINDER(NORMAL MAST)

R2B18-Li

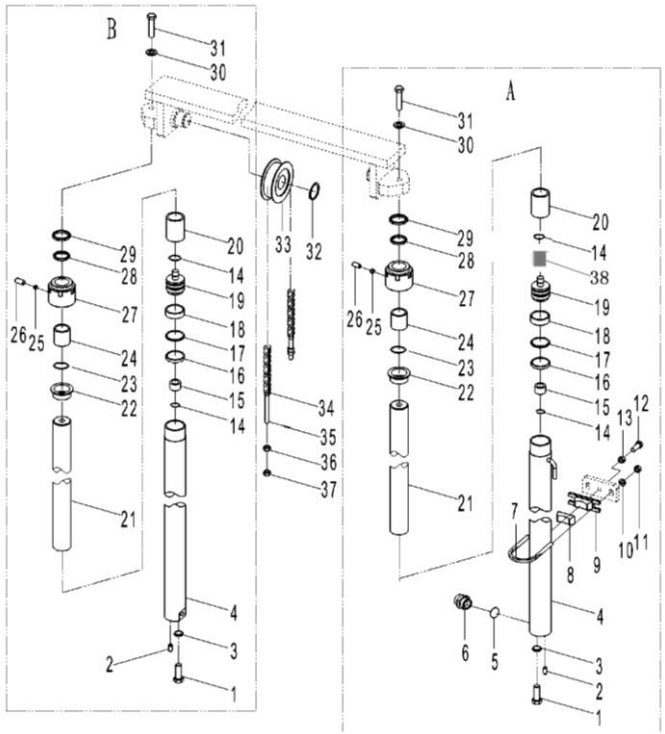


| 序号 Item No. | | 代号 Part No. | 名称 Description | | 数量 Q'ty | 备注 Remark |
|---|---|---|---|---|---|---|
| 24 | | SF-1 35 | Bush bearing 35×39×30 | 钢背轴承35×39×30 | 2 | |
| 25 | | Max302J01-200 | Nylon padΦ6×3 | 尼龙垫φ6×3 | 2 | |
| 26 | | GB/77-85 | Screw M8×8 | 螺钉M8×8 | 2 | |
| 27 | | TLC-15T05 | Cylinder cap | 缸盖 | 2 | |
| 28 | | ISI 45 | Packing 35×45×6 | 轴封35×45×6 | 2 | |
| 29 | | LBH 45 | t-proof seal 35×45×5/6.5 | 防尘圈35×45×5/6.5 | 2 | |
| 30 | | GB/T93-1987 | Washer 14 | 垫圈14 | 2 | |
| 31 | | GB/T5786-2000 | Bolt M14×1.5×35 | 螺栓 M14×1.5×35 | 2 | |
| 32 | | GB/T894.1-2000 | Snap spring40 | 挡圈40 | 2 | |
| 33 | | M1538013000 | Chain roller 780708K1 | 链轮780708K1 | 2 | |
| 34 | | RF018-7-8002000-A0 | Chain | 链条 | 2 | |
| 35 | | GB/T91-2000 | Cotter pin 2.5×12 | 销 2.5×12 | 4 | |
| 36 | | M1538001001 | Spherical nut M14×1.5 | 球面螺母M14×1.5 | 4 | |
| 37 | | GB/T6171-2000 | Nut M14×1.5 | 螺母M14×1.5 | 4 | |
| 38 | | TLC015-SV100 | Spool | 单向阀 | 2 | |

图42/FIG42. 起升油缸(基本型)/LIFT CYLINDER(NORMAL MAST)

R2B18-Li

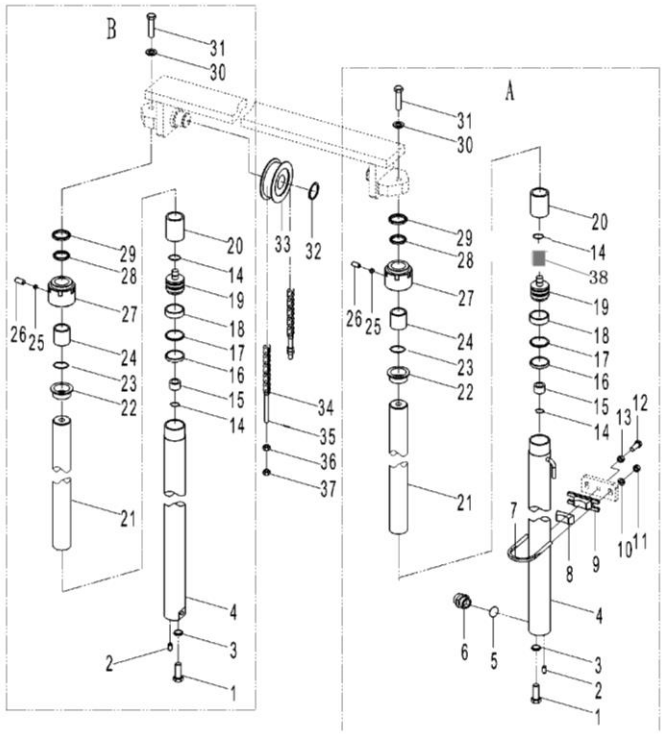


起升油缸选用件(基本型)
LIFT CYLINDER OPTION TABLE(NOMAL MAST)

| 起升高度 LIFTING HEIGHT | | 左起升油缸 Lift cylinder L.H. | 右起升油缸 Lift cylinder R.H. | 链条总成 Chain Ass'y | 备注 REMARKS |
|---|---|---|---|---|---|
| 2700 | | RF018-7-8005000-A0/2.7 | RF018-7-8008000-A0/2.7 | RF018-7-8002000-A0-87 | |
| 3000 | | RF018-7-8005000-A0 | RF018-7-8008000-A0 | RF018-7-8002000-A0-95 | 标准 |
| 3300 | | RF018-7-8005000-A0/3.3 | RF018-7-8008000-A0/3.3 | RF018-7-8002000-A0-103 | |
| 3500 | | RF018-7-8005000-A0/3.5 | RF018-7-8008000-A0/3.5 | RF018-7-8002000-A0-109 | |
| 3700 | | RF018-7-8005000-A0/3.7 | RF018-7-8008000-A0/3.7 | RF018-7-8002000-A0-113 | |
| 4000 | | RF018-7-8005000-A0/4.0 | RF018-7-8008000-A0/4.0 | RF018-7-8002000-A0-123 | |
| 4500 | | RF018-7-8005000-A0/4.5 | RF018-7-8008000-A0/4.5 | RF018-7-8002000-A0-137 | |
| 5000 | | RF018-7-8005000-A0/5.0 | RF018-7-8008000-A0/5.0 | RF018-7-8002000-A0-151 | |
| 5500 | | RF018-7-8005000-A0/5.5 | RF018-7-8008000-A0/5.5 | RF018-7-8002000-A0-165 | |
| 6000 | | RF018-7-8005000-A0/6.0 | RF018-7-8008000-A0/6.0 | RF018-7-8002000-A0-179 | |

图43/Fig43. 起升油缸(基本型)/LIFT CYLINDER(NORMAL MAST)

R2B25-Li

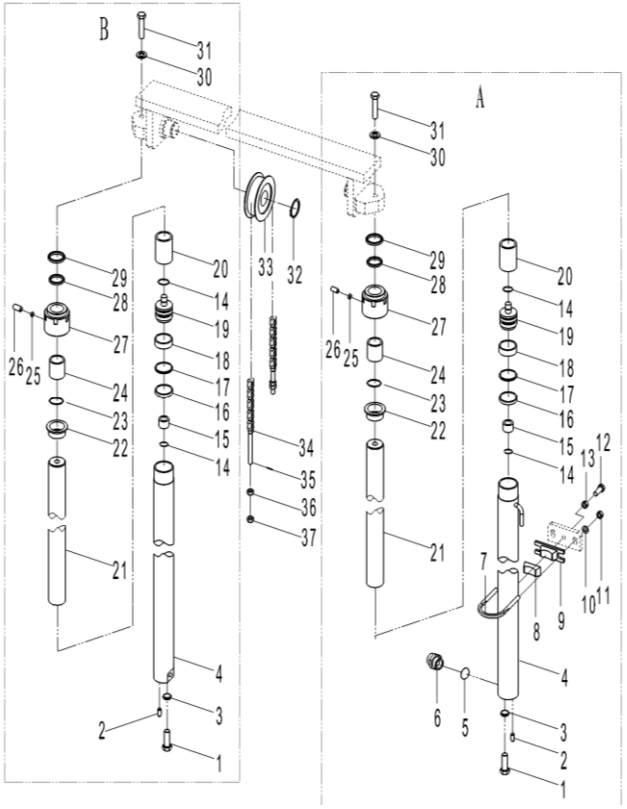


| 序号 Item No. | | 代号 Part No. | 名称 Descripition | | 数量 Q'ty | 备注 Remark |
|---|---|---|---|---|---|---|
| A | | RF025-4-8009000-A0 | Lift cylinder(right) | 右起升油缸 | 1 | |
| B | | RF025-4-8005000-A0 | Lift cylinder(left) | 左起升油缸 | 1 | |
| 1 | | GB/T5786-2000 | Bolt M12×1.25×25 | 螺栓M12×1.25×25 | 2 | |
| 2 | | GB/T119-86 | Pin 10×25 | 圆柱销10×25 | 2 | |
| 3 | | GB/T93-1987 | Washer 12 | 垫圈 12 | 2 | |
| 4 | | Max202J01A-100 | Cylidiner body | 缸体 | 2 | |
| 5 | | GB1235-76 | O-ring 22×2.4 | O形圈22×2.4 | 1 | |
| 6 | | Max020-SV100 | Safety valve | 防爆阀 | 1 | |
| 7 | | RF035-4-8000008-A0 | Hoop | 箍 | 2 | |
| 8 | | RF035-4-8000010-A0 | Rubber pad | 橡胶套 | 2 | |
| 9 | | RF035-4-8000009-A0 | Hoop seat | 箍座 | 2 | |
| 10 | | GB/T97.1-2000 | Washer 10 | 垫圈 10 | 4 | |
| 11 | | GB/T6171-2000 | Nut M10×1.25 | 螺母M10×1.25 | 4 | |
| 12 | | GB/T5786-2000 | Bolt M12×1.25×45 | 螺栓 M12×1.25×45 | 2 | |
| 13 | | GB/T6171-2000 | Nut M12×1.25 | 螺母M12×1.25 | 2 | |
| 14 | | GB/T895.1-86 | Snap ring 30 | 钢丝挡圈30 | 4 | |
| 15 | | TLC-30T03A | Sleeve | 阀套 | 2 | |
| 16 | | OSI 50 | Packing 50×40×6 | 孔封50×40×6 | 2 | |
| 17 | | Max202J01A-001 | Snap ring Φ50×Φ40×3 | 挡圈Φ50×Φ40×3 | 2 | |
| 18 | | Max202J01A-002 | Bearing ring D50×8×2.5 | 孔用支承环D50×8×2.5 | 2 | |
| 19 | | TLC-20T02 | Piston | 活塞 | 2 | |
| 20 | | TLC-20T11 | Sleeve Φ40×50 | 隔套Φ40×50 | 按需 | |
| 21 | | Max202J01-1 | Piston rod | 活塞杆 | 2 | |
| 22 | | TLC-20T05 | Bushing | 衬套 | 2 | |
| 23 | | GB1235-76 | O-ring 60×3.1 | O型圈60×3.1 | 2 | |

图43/Fig43. 起升油缸(基本型)/LIFT CYLINDER(NORMAL MAST)

R2B25-Li

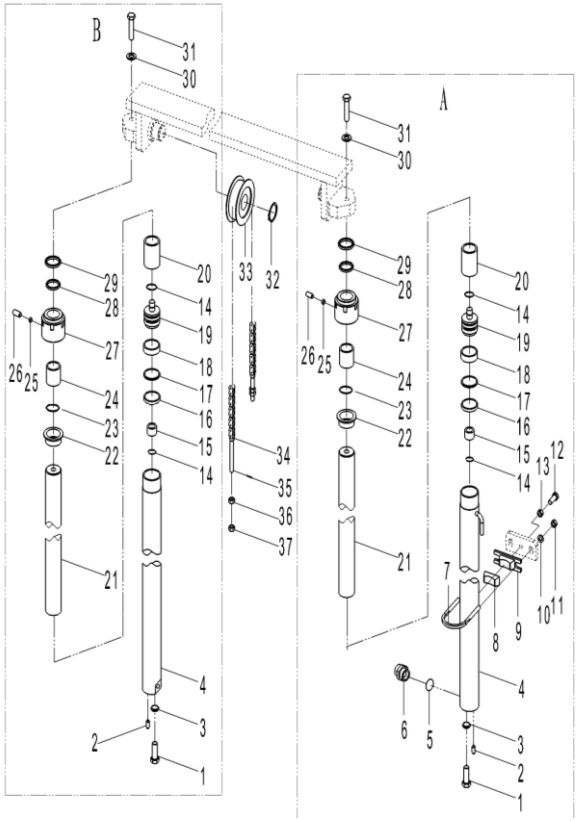


| 序号 Item No. | | 代号 Part No. | 名称 Descripition | | 数量 Q'ty | 备注 Remark |
|---|---|---|---|---|---|---|
| 24 | | SF-1 40 | Bush bearing 40×44×30 | 钢背轴承40×44×30 | 2 | |
| 25 | | Max302J01-200 | Nylon pad Φ6×3 | 尼龙垫Φ6×3 | 2 | |
| 26 | | GB/T77-85 | Screw M8×8 | 螺钉M8×8 | 2 | |
| 27 | | TLC-20T04A | Cylinder cap | 缸盖 | 2 | |
| 28 | | CF 40 | Packing 40×50×7 | 轴封40×50×7 | 2 | |
| 29 | | CE1 40 | st-proof seal 40×52×7/10 | 防尘圈40×52×7/10 | 2 | |
| 30 | | GB/T93-1987 | Washer 16 | 垫圈16 | 2 | |
| 31 | | GB/T5786-2000 | Bolt M16×1.5×50 | 螺栓 M16×1.5×50 | 2 | |
| 32 | | GB/T894.1-2000 | Snap ring 40 | 挡圈 40 | 2 | |
| 33 | | RF025-4-8010000-A0 | Chain roller | 链轮 | 2 | |
| 34 | | RF025-4-8001000-A0 | Chain | 链条 | 2 | |
| 35 | | GB/T91-2000 | Cotter Pin 3.2×40 | 开口销B3.2×40 | 4 | |
| 36 | | GB/T6184-2000 | Nut M18×1.5 | 螺母M18×1.5 | 4 | |
| 37 | | GB/T6171-2000 | Nut M18×1.5 | 螺母M18×1.5 | 4 | |

图43/Fig43. 起升油缸(基本型)/LIFT CYLINDER(NORMAL MAST)

R2B25-Li

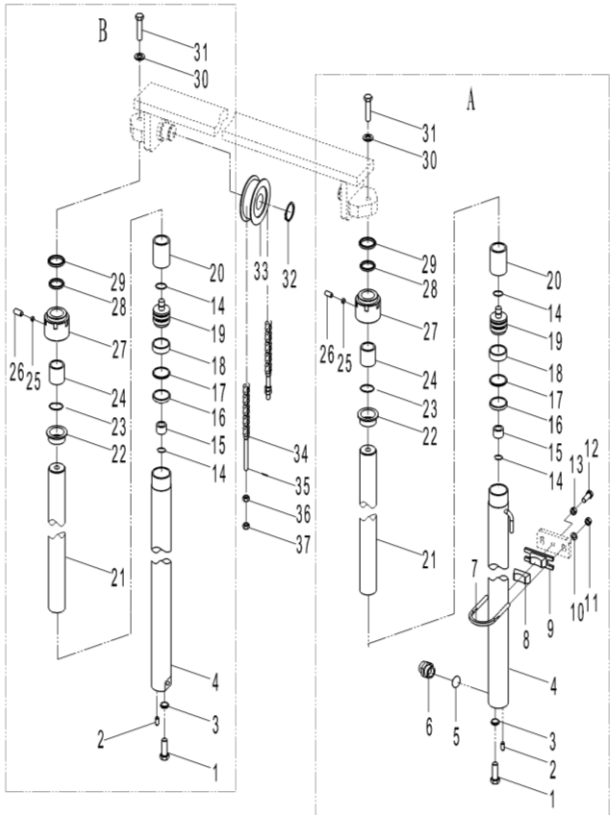


2.5t起升油缸选用件(基本型)
LIFT CYLINDER OPTION TABLE(NOMAL MAST)

| 起升高度 LIFTING HEIGHT | | 左起升油缸 Lift cylinder L.H. | 右起升油缸 Lift cylinder R.H. | 链条总成 Chain Ass'y | 备注 REMARKS |
|---|---|---|---|---|---|
| 2700 | | RF025-4-8005000-A0/2.7 | RF025-4-8009000-A0/2.7 | RF025-4-8001000-A0-87 | |
| 3000 | | RF025-4-8005000-A0 | RF025-4-8009000-A0 | RF025-4-8001000-A0-95 | 标准 |
| 3300 | | RF025-4-8005000-A0/3.3 | RF025-4-8009000-A0/3.3 | RF025-4-8001000-A0-103 | |
| 3500 | | RF025-4-8005000-A0/3.5 | RF025-4-8009000-A0/3.5 | RF025-4-8001000-A0-109 | |
| 3700 | | RF025-4-8005000-A0/3.7 | RF025-4-8009000-A0/3.7 | RF025-4-8001000-A0-115 | |
| 4000 | | RF025-4-8005000-A0/4.0 | RF025-4-8009000-A0/4.0 | RF025-4-8001000-A0-123 | |
| 4500 | | RF025-4-8005000-A0/4.5 | RF025-4-8009000-A0/4.5 | RF025-4-8001000-A0-137 | |

图44/Fig44. 前起升油缸(三级全自由)/FRONT LIFT CYLINDER(FULL FREE 3-STAGE MAST)

R2B18-Li R2B25-Li

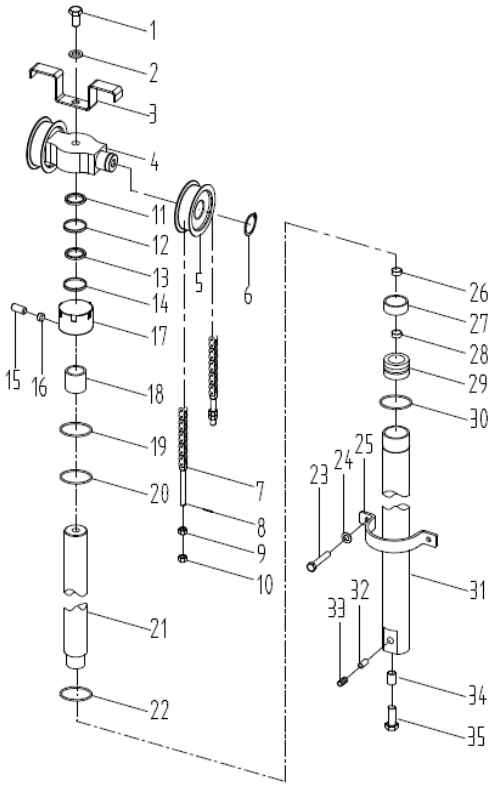


| 序号 Item No. | | 代号 Part No. | 名称 Descripition | | 数量 Q'ty | 备注 Remark |
|---|---|---|---|---|---|---|
| A | | RF018-7-8408000-A0 | Middle cylinder | 前起升油缸 | 1 | 1.8t |
| - | | RF025-4-8410000-A0 | Middle cylinder | 前起升油缸 | 1 | 2.5t |
| 1 | | GB/5782-2000 | Bolt M16×75 | 螺栓M16×75 | 1 | 1.8t |
| 1 | | GB/5782-2000 | Bolt M16×1.5×75 | 螺栓M16×1.5×75 | 1 | 2.5t |
| 2 | | GB/T93-1987 | Washer 16 | 垫圈16 | 1 | |
| 3 | | RF035-4-8400003-A0 | Chain protector | 链条护板 | 1 | |
| 4 | | RF018-7-8400002-A0 | Cylinder head | 缸头 | 1 | 1.8t |
| - | | RF025-4-8400002-A0 | Cylinder head | 缸头 | 1 | 2.5t |
| 5 | | RF018-7-8001000-A0 | Chain roller 780708K1 | 链轮(780708K1) | 2 | 1.8t |
| | | RF025-4-8411000-A0 | Chain roller 780708H | 链轮780708H | 2 | 2.5t |
| 6 | | GB/T894.1-2000 | Axis circlip 40 | 轴用挡圈40 | 2 | |
| 7 | | RF018-7-8409000-A0 | Chain ass'y LH1223 | 链条总成LH1223 | 2 | 1.8t |
| - | | RF025-4-8407000-A0 | Chain ass'y LH1234 | 链条总成LH1234 | 2 | 2.5t |
| 8 | | GB/T91-2000 | Cotter pin 3.2×40 | 开口销3.2×40 | 4 | |
| 9 | | GB/T6184-2000 | Nut M14×1.5 | 螺母M14×1.5 | 4 | 1.8t |
| - | | GB/T6184-2000 | Nut M18×1.5 | 螺母M18×1.5 | 4 | 2.5t |
| 10 | | GB/T6171-2000 | Nut M14×1.5 | 螺母M14×1.5 | 4 | 1.8t |
| - | | GB/T6171-2000 | Nut M18×1.5 | 螺母M18×1.5 | 4 | 2.5t |
| 11 | | LBH 60 | st-proof seal 60×70×8/11 | 防尘圈60×70×8/11 | 1 | 1.8t |
| - | | LBH 70 | st-proof seal 70×84×8/11 | 防尘圈70×84×8/11 | 1 | 2.5t |
| 12 | | MAX202J05B-001 | Snap ring d70×Φ60×3 | 挡圈d70×Φ60×3 | 1 | 1.8t |
| - | | MAX302J05B-001 | Snap ring d80×Φ70×3 | 挡圈d80×Φ70×3 | 1 | 2.5t |
| 13 | | ISI 60 | Axis seal 60×70×6 | 轴封60×70×6 | 1 | 1.8t |
| - | | ISI 70 | Axis seal 70×80×6 | 轴封70×80×6 | 1 | 2.5t |
| 14 | | GB1235-76 | O-ring 75×3.1 | O形圈75×3.1 | 1 | 2.5t |

图44/Fig44. 前起升油缸(三级全自由)/FRONT LIFT CYLINDER(FULL FREE 3-STAGE MAST)

R2B18-Li R2B25-Li

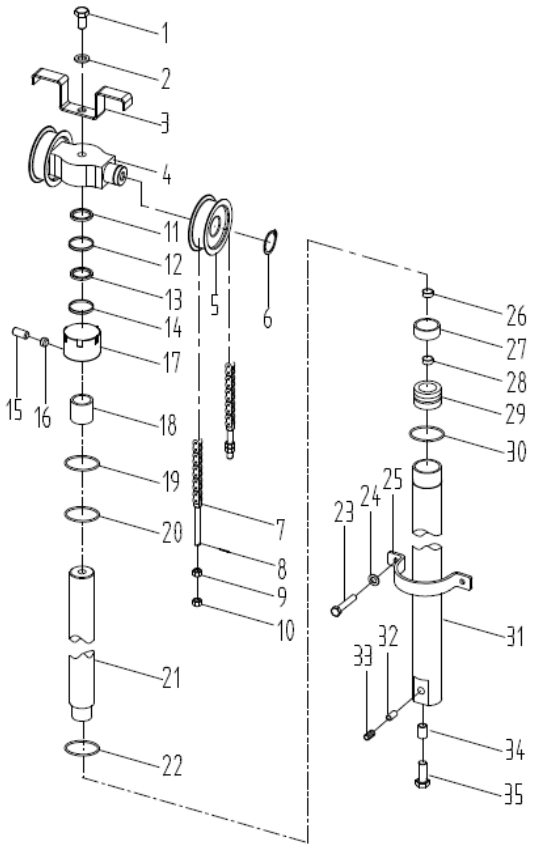


| 序号 Item No. | | 代号 Part No. | 名称 Descripition | | 数量 Q'ty | 备注 Remark |
|---|---|---|---|---|---|---|
| - | | GB1235-76 | O-ring 85×3.1 | O形圈85×3.1 | 1 | 2.5t |
| 15 | | GB/T 77-1985 | Screw M6×5 | 螺钉M6×5 | 1 | 内六角 |
| 16 | | JB982-77 | Pad 6 | 组合垫6 | 1 | |
| 17 | | TLC-20T08 | Guiding sleeve | 导向套 | 1 | 1.8t |
| - | | TLC-30T11 | Guiding sleeve | 导向套 | 1 | 2.5t |
| 18 | | SF-1 60 | Bushing bearing 60×65×45 | 钢背轴承60×65×45 | 1 | 1.8t |
| - | | SF-1 70 | Bushing bearing 70×75×45 | 钢背轴承70×75×45 | 1 | 2.5t |
| 19 | | MAX202J05B-002 | Snap ring d75×Φ65×3 | 挡圈d75×Φ65×3 | 1 | 1.8t |
| - | | MAX302J05B-002 | Snap ring d85×Φ75×3 | 挡圈d85×Φ75×3 | 1 | 2.5t |
| 20 | | GB1235-76 | O-ring 75×3.1 | O形圈75×3.1 | 1 | 1.8t |
| - | | GB1235-76 | O-ring 85×3.1 | O形圈85×3.1 | 1 | 2.5t |
| 21 | | MJ153J03B-200 | Piston Rod | 活塞杆 | 1 | 1.8t |
| - | | MJ203J03B-200 | Piston Rod | 活塞杆 | 1 | 2.5t |
| 22 | | MAX152J05B-003 | bearing ring D70×20×2.5 | 孔用支承环D75×20×2.5 | 1 | 1.8t |
| - | | MAX202J05B-003 | bearing ring D85×20×2.5 | 孔用支承环D85×20×2.5 | 1 | 2.5t |
| 23 | | GB/5786-2000 | Bolt M10×1.25×20 | 螺栓M10×1.25×20 | 2 | |
| 24 | | GB/T93-1987 | Washer 10 | 垫圈10 | 2 | |
| 25 | | RF018-7-8400003-A0 | U-Hoop | 抱箍 | 1 | 1.8t |
| - | | RF025-4-8400001-A0 | U-Hoop | 抱箍 | 1 | 2.5t |
| 26 | | Max302J01-300 | Steel wire snap ring d40 | 钢丝挡圈d40 | 1 | |
| 27 | | TLC015-SV100 | One-way valve | 单向阀 | 1 | |
| 28 | | GB/T 893.1-1986 | Orifice snap spring 22 | 孔用弹挡22 | 1 | |
| 29 | | MJ153J03B-400 | Piston | 活塞 | 1 | 1.8t |
| - | | MJ203J03B-400 | Piston | 活塞 | 1 | 2.5t |
| - | | OSI 85 | Orifice seal 85×75×6 | 孔封85×75×6 | 2 | 2.5t |
| 30 | | OSI 75 | Orifice seal 75×65×6 | 孔封75×65×6 | 2 | 1.8t |

图44/Fig44. 前起升油缸(三级全自由)/FRONT LIFT CYLINDER(FULL FREE 3-STAGE MAST)

R2B18-Li R2B25-Li

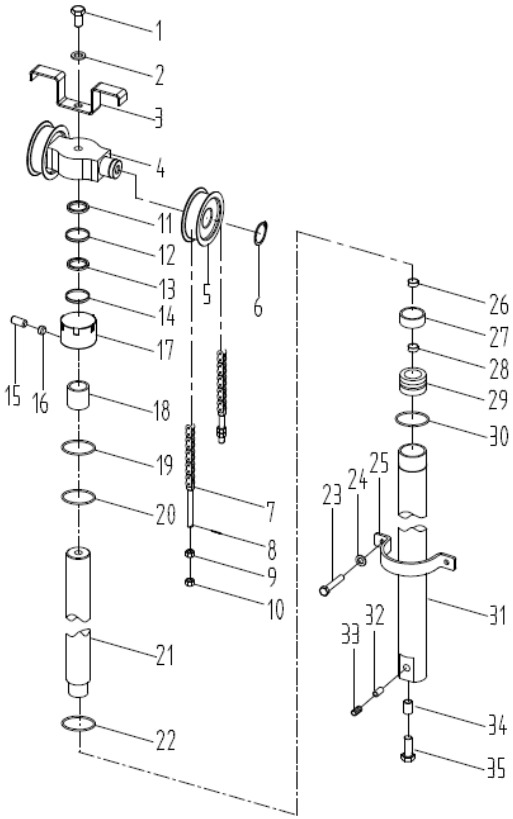


| 序号 Item No. | | 代号 Part No. | 名称 Descripition | | 数量 Q'ty | 备注 Remark |
|---|---|---|---|---|---|---|
| 31 | | MJ153J03B-100 | Cylinder body | 缸体 | 1 | 1.8t |
| - | | MJ203J03B-100 | Cylinder body | 缸体 | 1 | 2.5t |
| 32 | | GB/T3452.1-92 | O-ring 19×2.65 | O形圈19×2.65 | 1 | |
| 33 | | TLC-20T14 | Sliding valve | 滑阀 | 1 | 1.8t |
| - | | TLC-30T27 | Sliding valve | 滑阀 | 1 | 2.5t |
| 34 | | GB/T93-1987 | Washer 12 | 垫圈12 | 1 | |
| 35 | | GB/T5786-2000 | Bolt M12×1.25×25 | 螺栓M12×1.25×25 | 1 | |

图44/Fig44. 前起升油缸(三级全自由)/FRONT LIFT CYLINDER(FULL FREE 3-STAGE MAST)

R2B18-Li R2B25-Li

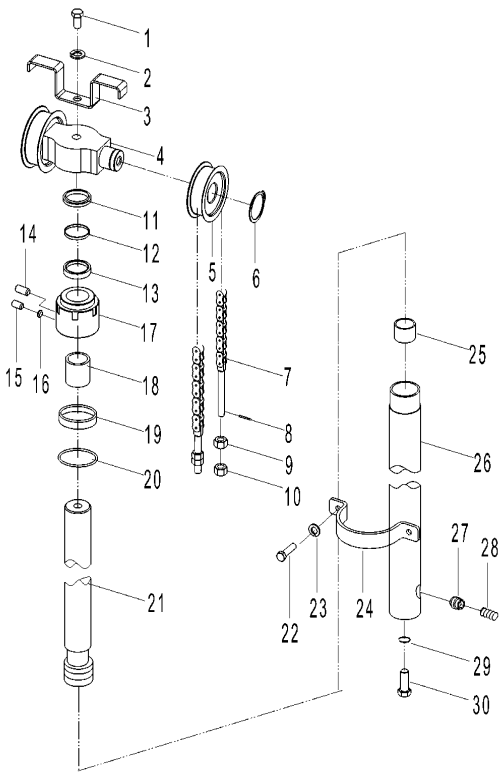


1.8-2.5t前起升油缸选用表
FRONT LIFT CYLINDER OPTION TABLE

| 起升高度Lifting Height | | 1.8t前起升油缸 Lift cylinder | 2.5t前起升油缸 Lift cylinder | | 备注 Remark |
|---|---|---|---|---|---|
| 3600 | | RF018-7-8408000-A0/1 | - | | |
| 3700 | | - | RF025-4-8410000-A0/1 | | |
| 4000 | | RF018-7-8408000-A0 | RF025-4-8410000-A0/1 | | 标准 |
| 4350 | | RF018-7-8408000-A0/3 | RF025-4-8410000-A0/3 | | |
| 4700 | | RF018-7-8408000-A0/4 | RF025-4-8410000-A0/4 | | |
| 5000 | | RF018-7-8408000-A0/5 | RF025-4-8410000-A0/5 | | |
| 5500 | | RF018-7-8408000-A0/6 | RF025-4-8410000-A0/6 | | |
| 6000 | | RF018-7-8408000-A0/7 | RF025-4-8410000-A0/7 | | |

图44/Fig44. 前起升油缸(三级全自由)/FRONT LIFT CYLINDER(FULL FREE 3-STAGE MAST)

R2B18-Li R2B25-Li

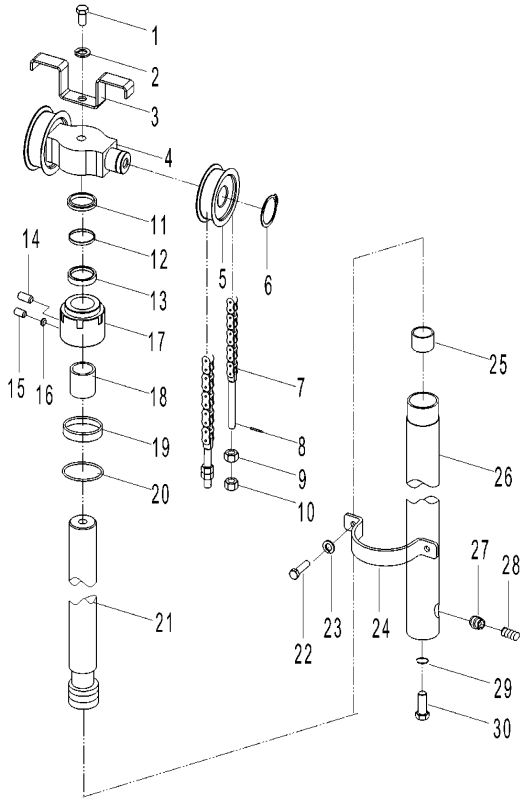


1.8-2.5t前起升油缸选用表
FRONT LIFT CYLINDER OPTION TABLE

| 起升高度Lifting Height | | 1.8t链条总成 Chain Ass'y | 2.5t链条总成 Chain Ass'y | | 备注 Remark |
|---|---|---|---|---|---|
| 3600 | | RF018-7-8409000-A0/3.6-69 | - | | |
| 3700 | | - | RF025-4-8407000/3.7-63 | | |
| 4000 | | RF018-7-8409000-A0/4.0-75 | RF025-4-8407000/4.0-67 | | 标准 |
| 4350 | | RF018-7-8409000-A0/4.35-83 | RF025-4-8407000/4.35-75 | | |
| 4700 | | RF018-7-8409000-A0/4.7-87 | RF025-4-8407000/4.7-79 | | |
| 4800 | | RF018-7-8409000-A0/4.8-95 | RF025-4-8407000/4.8-81 | | |
| 5000 | | RF018-7-8409000-A0/5.0-105 | RF025-4-8407000/5.0-87 | | |
| 5500 | | RF018-7-8409000-A0/5.5-113 | RF025-4-8407000/5.5-105 | | |
| 60000 | | RF018-7-8409000-A0/6.0-125 | RF025-4-8407000/6.0-105 | | |

图45/FIG45. 后起升油缸(三级全自由)/REAR LIFT CYLINDER(FULL FREE 3-STAGE MAST)

R2B18-Li

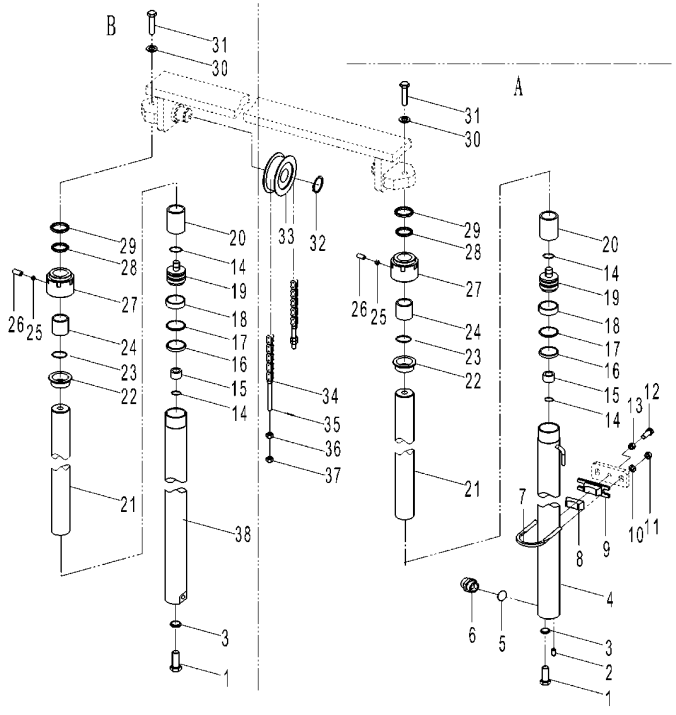


| 序号 Item No. | | 代号 Part No. | 名称 Description | | 数量 Q'ty | 备注 Remark |
|---|---|---|---|---|---|---|
| A | | RF018-7-8402000-A0 | Lift cylinder(right) | 右起升油缸 | 1 | |
| B | | RF018-7-8406000-A0 | Lift cylinder(left) | 左起升油缸 | 1 | |
| 1 | | GB/T5786-2000 | Bolt M12×1.25×25 | 螺栓M12×1.25×25 | 2 | |
| 2 | | GB/T119-86 | Pin 10×24 | 圆柱销10×24 | 1 | |
| 3 | | GB/T93-1987 | Washer 12 | 垫圈 12 | 2 | |
| 4 | | Max153J02-100 | Cylinder body (right) | 右缸体 | 1 | |
| 5 | | GB1235-76 | O-ring 22×2.4 | O形圈22×2.4 | 1 | |
| 6 | | Max020-SV100 | Safety valve | 防爆阀 | 1 | |
| 7 | | RF018-7-8000001-A0 | Hoop | 箍 | 2 | |
| 8 | | RF035-4-8000010-A0 | Rubber pad | 橡胶套 | 2 | |
| 9 | | RF018-7-8000002-A0 | Hoop seat | 箍座 | 2 | |
| 10 | | GB/T97.1-2000 | Washer 10 | 垫圈 10 | 4 | |
| 11 | | GB/T6171-2000 | Nut M10×1.25 | 螺母M10×1.25 | 4 | |
| 12 | | GB/T5786-2000 | Bolt M12×1.25×30 | 螺栓 M12×1.25×30 | 2 | |
| 13 | | GB/T6171-2000 | Nut M12×1.25 | 螺母M12×1.25 | 2 | |
| 14 | | GB/T895.1-86 | Snap spring d=24 | 钢丝挡圈d=24 | 4 | |
| 15 | | TLC-15T03A | Sleeve | 阀套 | 2 | |
| 16 | | OSI 45 | Packing 45×35×6 | 孔封45×35×6 | 2 | |
| 17 | | Max030-06-001 | Snap spring Φ45×Φ35×3 | 挡圈Φ45×Φ35×3 | 2 | |
| 18 | | Max152J01B-001 | bearing ring D45×8×2.5 | 孔用支承环D45×8×2.5 | 2 | |
| 19 | | TLC-15T02 | Piston | 活塞 | 2 | |
| 20 | | Max153J01-2 | Sleeve | 隔套 | 2 | |
| 21 | | Max153J01-1 | Piston rod | 活塞杆 | 2 | |
| 22 | | TLC-15T06 | Bushing | 衬套 | 2 | |
| 23 | | GB1235-76 | O-ring 55×3.1 | O形圈55×3.1 | 2 | |

图45/FIG45. 后起升油缸(三级全自由)/REAR LIFT CYLINDER(FULL FREE 3-STAGE MAST)

R2B18-Li

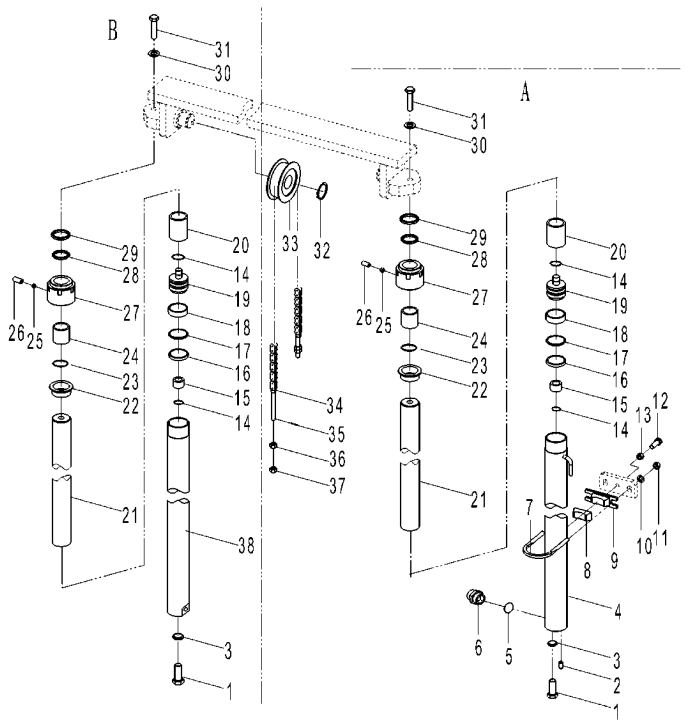


| 序号 Item No. | | 代号 Part No. | 名称 Description | | 数量 Q'ty | 备注 Remark |
|---|---|---|---|---|---|---|
| 24 | | SF-1 35 | sh bearing φ35×φ39×30 | 钢背轴承φ35×φ39×30 | 2 | |
| 25 | | Max302J01-200 | Nylon pad φ6×3 | 尼龙垫φ6×3 | 2 | |
| 26 | | GB/T77-85 | Screw M8×8 | 内六角螺钉M8×8 | 2 | |
| 27 | | TLC-15T05A | Cylinder cap | 缸盖 | 2 | |
| 28 | | CF 35 | Packing 35×45×7 | 轴封35×45×7 | 2 | |
| 29 | | CE1 35 | st-proof seal 35×47×7/10 | 防尘圈35×47×7/10 | 2 | |
| 30 | | GB/T93-1987 | Washer 16 | 垫圈16 | 2 | |
| 31 | | GB/T5786-2000 | Bolt M16×1.5×35 | 螺栓M16×1.5×35 | 2 | |
| 32 | | GB/T894.1-2000 | Snap spring40 | 挡圈40 | 2 | |
| 33 | | RF018-7-8001000-A0 | Chain roller | 链轮 | 2 | |
| 34 | | RF018-7-8407000-A0 | Chain | 链条 | 2 | |
| 35 | | GB/T91-2000 | Cotter pin 3.2×30 | 开口销3.2×30 | 4 | |
| 36 | | M1538001001 | Spherical nut M14×1.5 | 球面螺母M14×1.5 | 4 | |
| 37 | | GB/T6171-2000 | Nut M14×1.5 | 螺母M14×1.5 | 4 | |
| 38 | | Max153J01-1000 | Cylinder body (left) | 左缸体 | 1 | |

图45/FIG45. 后起升油缸(三级全自由)/REAR LIFT CYLINDER(FULL FREE 3-STAGE MAST)

R2B18-Li

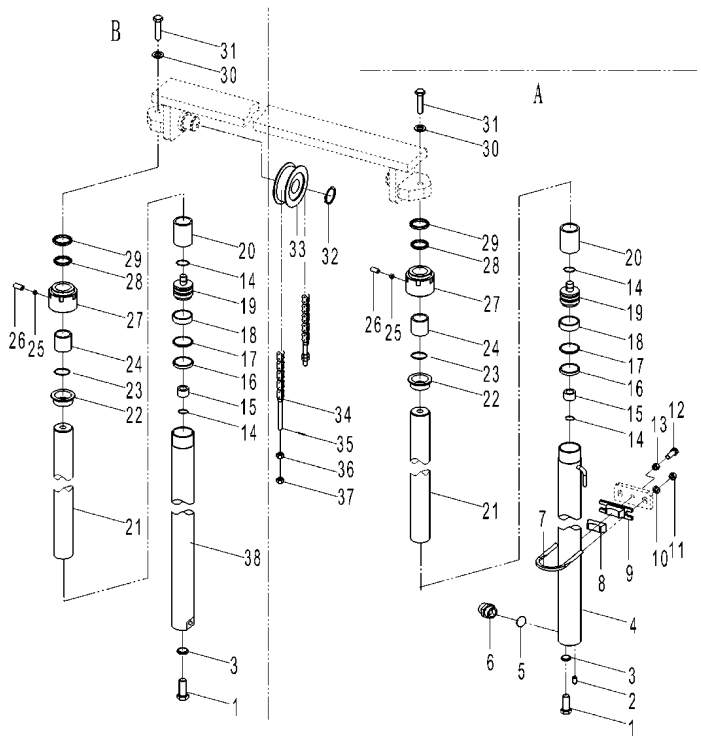


1.8t起升油缸选用表
REAR LIFT CYLINDER OPTION TABLE

| 起升高度LIFTING HEIGHT | | 起升油缸左 Lift cylinder L.H. | 起升油缸右 Lift cylinder R.H. | （长）链条总成 Chain Ass'y | 备注 REMARK |
|---|---|---|---|---|---|
| 3600 | | RF018-7-8406000-A0/3.6 | RF018-7-8402000-A0 /3.6 | RF018-7-8001000-A0-79 | |
| 4000 | | RF018-7-8406000-A0 | RF018-7-8402000-A0 /3.6 | RF018-7-8001000-A0-85 | 标准 |
| 4350 | | RF018-7-8406000-A0/4.35 | RF018-7-8402000-A0 /4.35 | RF018-7-8001000-A0-91 | |
| 4500 | | RF018-7-8406000-A0/4.5 | RF018-7-8402000-A0 /4.5 | RF018-7-8001000-A0-95 | |
| 4800 | | RF018-7-8406000-A0/4.8 | RF018-7-8402000-A0 /4.8 | RF018-7-8001000-A0-99 | |
| 5000 | | RF018-7-8406000-A0/5.0 | RF018-7-8402000-A0 /5.0 | RF018-7-8001000-A0-105 | |
| 5500 | | RF018-7-8406000-A0/5.5 | RF018-7-8402000-A0 /5.5 | RF018-7-8001000-A0-113 | |
| 6000 | | RF018-7-8406000-A0/6.0 | RF018-7-8402000-A0 /6.0 | RF018-7-8001000-A0-123 | |
| 6500 | | RF018-7-8406000-A0/6.5 | RF018-7-8402000-A0 /6.5 | RF018-7-8001000-A0-135 | |

图46/Fig46. 后起升油缸(三级全自由)/REAR LIFT CYLINDER(FULL FREE 3-STAGE MAST)

R2B25-Li

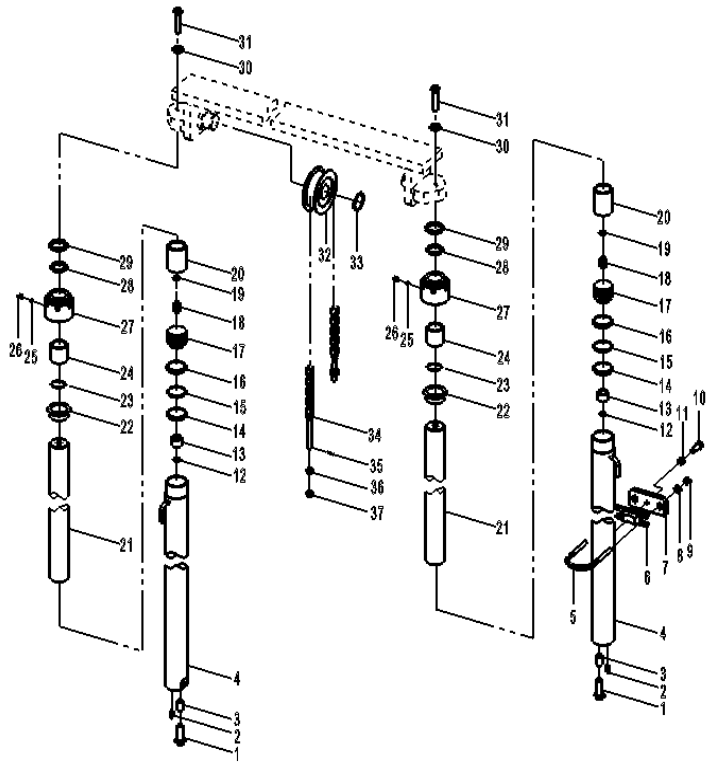


| 序号 Item No. | | 代号 Part No. | 名称 Descripition | | 数量 Q'ty | 备注 Remark |
|---|---|---|---|---|---|---|
| A | | RF025-4-8409000-A0 | Lift cylinder(right) | 右起升油缸 | 1 | |
| B | | RF025-4-8403000-A0 | Lift cylinder(left) | 左起升油缸 | 1 | |
| 1 | | GB/T5786-2000 | Bolt M12×1.25×25 | 螺栓M12×1.25×25 | 2 | |
| 2 | | GB/T119-86 | Pin 10×24 | 圆柱销10×24 | 2 | |
| 3 | | RF035-4-8000003-A0 | Collar | 套管 | 2 | |
| 4 | | Max203J02A-100 | Cylidiner body | 缸体 | 2 | |
| 5 | | RF035-4-8000008-A0 | Hoop | 箍 | 2 | |
| 6 | | RF035-4-8000010-A0 | Rubber pad | 橡胶套 | 2 | |
| 7 | | RF035-4-8000009-A0 | Hoop seat | 箍座 | 2 | |
| 8 | | GB/T97.1-2000 | Washer 10 | 垫圈 10 | 4 | |
| 9 | | GB/889.2-2000 | Nut M10×1.25 | 螺母M10×1.25 | 4 | |
| 10 | | GB/T5786-2000 | Bolt M12×1.25×60 | 螺栓 M12×1.25×60 | 2 | |
| 11 | | GB/T6171-2000 | Nut M12×1.25 | 螺母M12×1.25 | 2 | |
| 12 | | GB/T895.1-86 | Snap ring d30 | 钢丝挡圈d30 | 4 | |
| 13 | | TLC-30T34 | Sleeve | 阀套 | 2 | |
| 14 | | OSI 50 | Packing 50×40×6 | 孔封50×40×6 | 2 | |
| 15 | | Max202J01A-001 | Snap ring Φ50×Φ40×3 | 挡圈Φ50×Φ40×3 | 2 | |
| 16 | | Max202J01A-002 | Bearing ring D50×8×2.5 | 孔用支承环D50×8×2.5 | 2 | |
| 17 | | TLC-20T16 | Piston | 活塞 | 2 | |
| 18 | | TLC015-SV100 | One-way valve | 单向阀 | 1 | |
| 19 | | GB/T895.1-86 | Snap ring d30 | 钢丝挡圈d30 | 4 | |
| 20 | | Max203J01-2 | Sleeve | 隔套 | 2 | |
| 21 | | MB203J01-1 | Piston rod | 活塞杆 | 2 | |
| 22 | | TLC-20T05 | Bushing | 衬套 | 2 | |
| 23 | | GB1235-76 | O-ring 60×3.1 | O形圈60×3.1 | 2 | |

图46/Fig46. 后起升油缸(三级全自由)/REAR LIFT CYLINDER(FULL FREE 3-STAGE MAST)

R2B25-Li

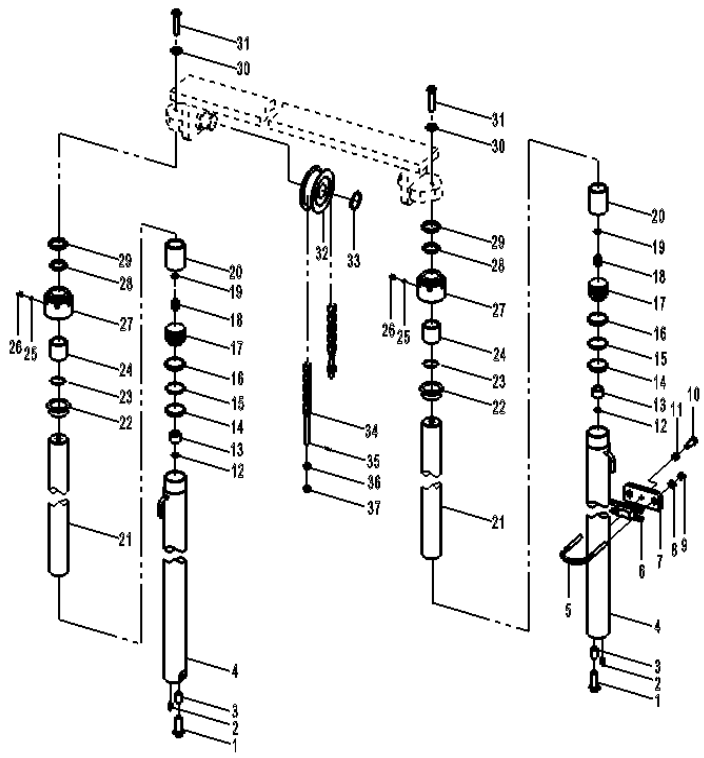


| 序号 Item No. | | 代号 Part No. | 名称 Descripition | | 数量 Q'ty | 备注 Remark |
|---|---|---|---|---|---|---|
| 24 | | SF-1 40 | Bush bearing 40×44×30 | 钢背轴承40×44×30 | 2 | |
| 25 | | JB982-77 | Compination Washer 6 | 组合密封垫圈6 | 2 | |
| 26 | | GB/T70-85 | Screw M6×5 | 内六角圆柱头螺钉M6×5 | 2 | |
| 27 | | TLC-20T04A | Cylinder cap | 缸盖 | 2 | |
| 28 | | CF 40 | Packing 40×50×7 | 轴封40×50×7 | 2 | |
| 29 | | CE1 40 | st-proof seal 40×52×7/10 | 防尘圈40×52×7/10 | 2 | |
| 30 | | GB/T93-1987 | Washer 16 | 垫圈16 | 2 | |
| 31 | | GB/T5786-2000 | Bolt M16×1.5×50 | 螺栓M16×1.5×50 | 2 | |
| 32 | | RF025-4-8408000-A0 | Chain roller | 链轮 | 2 | |
| 33 | | GB/T894.1-2000 | Snap ring40 | 挡圈40 | 2 | |
| 34 | | RF025-4-8401000-A0 | Chain ass'y | 链条总成 | 2 | |
| 35 | | GB/T91-2000 | Cotter pin 3.2×40 | 开口销3.2×40 | 4 | |
| 36 | | GB/T6184-2000 | Nut M18×1.5 | 螺母M18×1.5 | 4 | |
| 37 | | GB/T6171-2000 | Nut M18×1.5 | 螺母M18×1.5 | 4 | |

图46/Fig46. 后起升油缸(三级全自由)/REAR LIFT CYLINDER(FULL FREE 3-STAGE MAST)

R2B25-Li

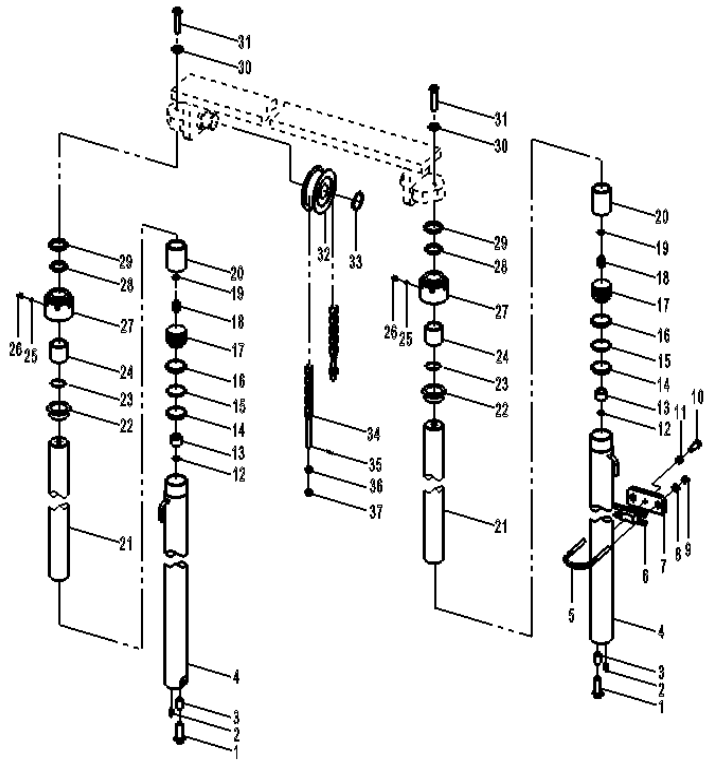


2.5t起升油缸选用表
REAR LIFT CYLINDER OPTION TABLE

| 起升高度LIFTING HEIGHT | | 2.5t左起升油缸左 Lift cylinder L.H. | 2.5t右起升油缸 Lift cylinder R.H. | 2.5t链条总成 Chain Ass'y | 备注 REMARK |
|---|---|---|---|---|---|
| 3700 | | RF025-4-8403000-A0/3.7 | RF025-4-8409000-A0/3.7 | RF025-4-8401000-A0/3.7-79 | |
| 4000 | | RF025-4-8403000-A0/4.0 | RF025-4-8409000-A0/4.0 | RF025-4-8401000-A0/4.0-85 | 标准 |
| 4350 | | RF025-4-8403000-A0/4.35 | RF025-4-8409000-A0/4.35 | RF025-4-8401000-A0/4.35-91 | |
| 4700 | | RF025-4-8403000-A0/4.7 | RF025-4-8409000-A0/4.7 | RF025-4-8401000-A0/4.7-97 | |
| 4800 | | RF025-4-8403000-A0/4.8 | RF025-4-8409000-A0/4.8 | RF025-4-8401000-A0/4.8-99 | |
| 5000 | | RF025-4-8403000-A0/5.0 | RF025-4-8409000-A0/5.0 | RF025-4-8401000-A0/5.0-103 | |
| 5500 | | RF025-4-8403000-A0/5.5 | RF025-4-8409000-A0/5.5 | RF025-4-8401000-A0/5.5-113 | |
| 6000 | | RF025-4-8403000-A0/6.0 | RF025-4-8409000-A0/6.0 | RF025-4-8401000-A0/6.0-123 | |

图47/Fig47. 倾斜油缸/TILT CYLINDER

R2B18-Li R2B25-Li

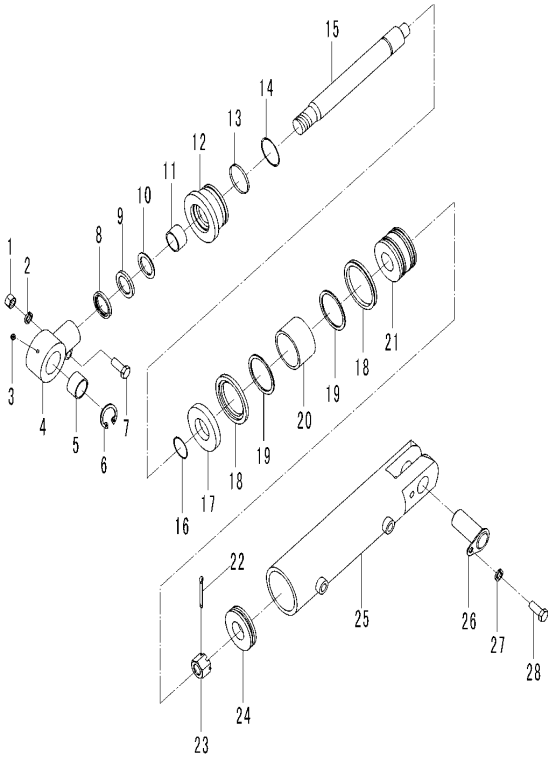


| 序号 Item No. | | 代号 Part No. | 名称 Descripition | | 数量 Q'ty | 备注 Remark |
|---|---|---|---|---|---|---|
| A | | RF025-7-8003000-A0 | Tilt cylinder(right) | 右倾斜缸 | 1 | |
| B | | RF025-7-8002000-A0 | Tilt cylinder(left) | 左倾斜缸 | 1 | |
| 01 | | GB/T6171-2000 | Nut M14×1.5 | 螺母M14×1.5 | 1 | |
| 02 | | GB/T93-1987 | Washer 14 | 垫圈14 | 1 | |
| 03 | | GB/T1152-76 | Nipple M10×1 | 油杯M10×1 | 1 | |
| 04 | | M030-06-1 | Connect ring | 耳环 | 1 | |
| 05 | | GB/T304.5-81 | Oscillating bearing GE30ES | 关节轴承GE30ES | 1 | |
| 06 | | GB/T893.1-86 | Clip spring D47 | 孔用弹挡D47 | 1 | |
| 07 | | GB/T5786-2000 | Bolt M14×1.5×55 | 螺栓M14×1.5×55 | 1 | |
| 08 | | LBH32 | -proof seal d32×40×5/6.5 | 防尘圈d32×40×5/6.5 | 1 | |
| 09 | | MB020-001 | Snap ring φ42×φ32×3 | 挡圈φ42×φ32×3 | 1 | |
| 10 | | ISI 32 | Packing 32×42×6 | 轴封32×42×6 | 1 | |
| 11 | | SF-1 32 | Bush bearing 32×36×35 | 钢背轴承32×36×35 | 1 | |
| 12 | | TLC-30T22A | Guiding bushing70 | 导向套70 | 1 | |
| 13 | | MB020-002 | nap ring φ70.5×φ62×1.5 | 挡圈φ70.5×φ62×1.5 | 1 | |
| 14 | | GB1235-76 | O-ring 70×5.7 | O型圈70×5.7 | 1 | |
| 15 | | MB020-06-1 | Piston rod | 活塞杆 | 1 | |
| 16 | | GB1235-76 | O-ring 38×3.5 | O型圈38×3.5 | 1 | |
| 17 | | MB020-06-1 | Spacer Ⅰ | 调整套Ⅰ | 1 | |
| 18 | | Max020-06-002 | Snap ring Φ70×Φ60×2.5 | 挡圈φ70×φ60×2.5 | 1 | |
| 19 | | Max020-06-003 | bearing ring D70×16×2.5 | 孔用支承环D70×16×2.5 | 1 | |
| 21 | | TLC-30T26 | Piston | 活塞 | 1 | |
| 22 | | GB/T91-86 | Cotter pin 5×45 | 开口销5×45 | 1 | |
| 23 | | GB/T9459-88 | Nut M27×2 δ27 | 槽母M27×2厚27 | 1 | |
| 24 | | HL015-06-04A | Spacer Ⅱ | 调整套Ⅱ | 1 | |

图47/Fig47. 倾斜油缸/TILT CYLINDER

R2B18-Li R2B25-Li

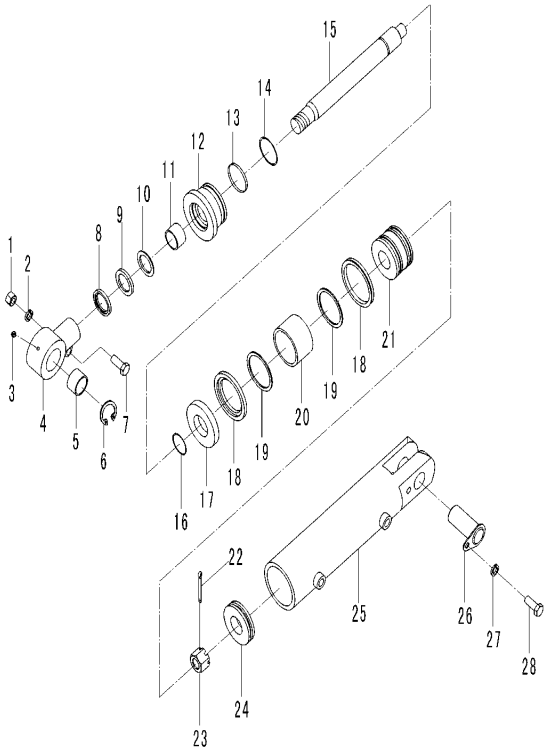


| 序号 Item No. | | 代号 Part No. | 名称 Descripition | | 数量 Q'ty | 备注 Remark |
|---|---|---|---|---|---|---|
| 25 | | MB050-06L/R-100 | Cylidiner body | 缸体 | 1 | |
| 26 | | 20B80-09000 | Pin shaft | 倾斜缸后销轴 | 1 | |
| 27 | | GB/T93-1987 | Washer 10 | 垫圈 10 | 1 | |
| 28 | | GB/T5783-2000 | Bolt M10×20 | 螺栓 M10×20 | 1 | |

图47/Fig47. 倾斜油缸/TILT CYLINDER

R2B18-Li R2B25-Li

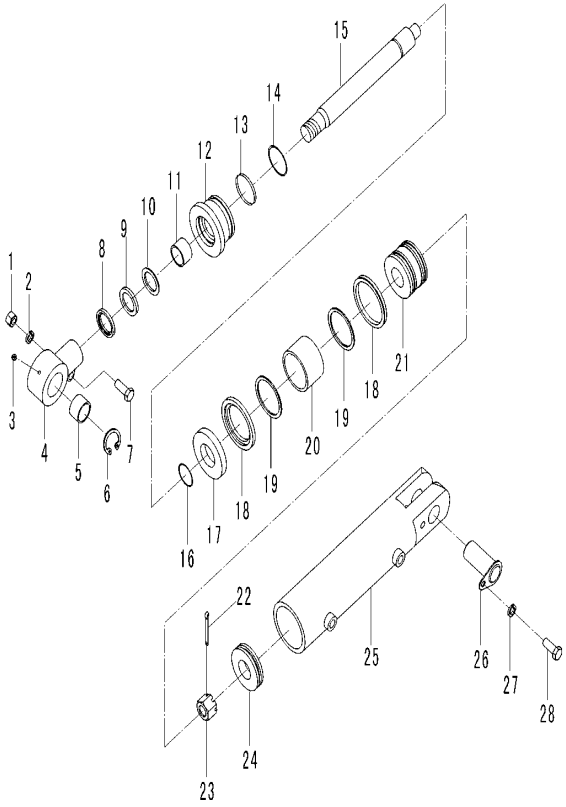


1.8-2.5t倾斜升油缸选用表 TILT CYLINDER OPTION TABLE

| 前/后倾角 Tilt angle | | 倾斜缸右 Tilt cylinder R.H. | 倾斜缸左 Tilt cylinder L.H. | | 起升高度 LIFTING HEIGHT |
|---|---|---|---|---|---|
| 10°/12° | | RF025-7-8003000-A0/10°/12° | RF025-7-8002000-A0/10° /12° | | 2.7m≤h≤4.7m |
| 6°/6° | | RF025-7-8003000-A0/6°/6° | RF025-7-8002000-A0/6° /6° | | 4.7m＜h≤6m |