Introduction

Counterbalanced Electric Rough-terrain Forklift Truck is a new series of products developed and manufactured by our Company to satisfy the market demands, based on assimilating domestic and foreign battery forklift trucks, in combination with foreign advanced technology introduced by our Company. They are especially applicable to stations, ports, freight yards, and warehouses, as well as foods, light textile industry, and general factories and mines for loading and unloading, conveyance, stacking, and other operations.

As wide visual field crane system, full hydraulic steering mechanism, automatic power brake, new-type stepless speed regulator, open overhead guard, and other advanced pars are used for this forklift, and also equipped with quality motor, battery, MOSFET electric control, and large screen liquid crystal combination instrument, it is characterized by superior performance, easy operation, expanse visual field, flexible steering, small turning radius, reliable brake, good dynamic property, low noise, free pollution, nice outside appearance, etc.

This manual has briefly introduced the technical parameters, structures of respective main parts, and operating principle as well as operation, maintenance, service, and other aspects of the counterbalanced Electric Rough-terrain Forklift Trucks of our Company. It is able to help operators to rationally use the battery forklift truck, for the battery truck to play its maximum efficacy. It is hoped that operators and equipment management staff will seriously read the manual prior to operation of the battery forklift trucks.

The specifications and notices in this manual shall be strictly observed during operation, and elaborative use will allow your forklift truck to be under optical working status, so as to play higher efficacy.

As parts and devices are being uninterruptedly improved, the contents related in this manual will be subject to changes along with without separate notices. User's understanding is kindly expected. This manual is also applicable to the forklift trucks assembled with affiliated attachments. The counterbalanced Electric Rough-terrain Forklift Trucks have been CE certified.

Note: It is strictly prohibited for users to privately refit the forklift truck without permission!

Table of Contents

Introduction 1
Table of Contents 2
I. Main Technical Specification of Forklift Truck 4
II. Structure, Principle, Adjustment, and Maintenance of Forklift Truck 6
1. Battery and Installation 6
1.1 Overview 6
1.2 Structure of Battery 6
1.3 Specifications of Battery and Charger 6
1.5 Use of Battery 6
1.6 Service of Battery 7
1.7 General Notices 7
1.8 Common Failures and Disposal Methods of Battery 8
2. Driving Motor and Driving System 9
2.1 Overview 9
2.3 Driving Motor 12
2.3.1 Specification of Driving Motor 12
2.3.2 Conditions of Operating Environment 12
3. Pump Motor and Installation 12
4 Electrical System 13
4.1 Overview 13
4.2 AC Motor Controller 13
4.3 Instruments 17
4.4 Fault Codes 18
5. Steering device and installation 22
5.1 Overview 22
5.1.1 Inspection after re-installation of steering system 22
5.1.2 Steering system fault diagnosis 22
6. Steering Axle and Installation 24
6.1 Overview 24
6.2 Steering Knuckle and Steering King Pin 25
6.3 Adjustment for Pre-tightened Load of Steering Wheel Bearing 26
7. Hand Brake Operation 27
7.1 Overview 27
7.2 Parking Brake Operation Device 27
8. Foot Brake Operation 29
8.1 Overview 29
8.2 Foot Brake Pedal 29
8.2.1 Adjustment of Foot Brake Pedal 29
8.3 Brake Master Cylinder 30
9. Working Oil Tank and Installation 32
9.1 Overview 32
9.2 Hydraulic Oil Tank 32
10.1 Overview 33
10.2 Oil Pump 33

10.2.1 Maintenance of Oil Pump 33
10.2.2 Fault Diagnosis 37
10.3 Multi-way Valve 37
10.4 Full Hydraulic Steering Gear 43
10.5 Speed Limiting Valve 43
10.6 Hydraulic Pipeline 44
11. Working Devices 45
11.1 Overview 45
11.2 Inside and Outside Mast (Fig 10-26) 45
11.3 Fork Carriage 45
11.4 Roller Positions (Fig 10-30) 47
11.5 Lifting Cylinder 47
11.6 Tilting Cylinder 50
11.7 Installation of Mast (as indicated in Fig 11-10) 51
11.8 Disassembly of Mast (as indicated in Fig 11-10) 52
III. List of Wearing Parts 53
1. Some Wearing Parts 53
2. Oil Seal 53
3. O-Ring 53
4. Combination Seal Ring 53
5. Some Electric Appliance Components 53

I. Main Technical Specification of Forklift Truck

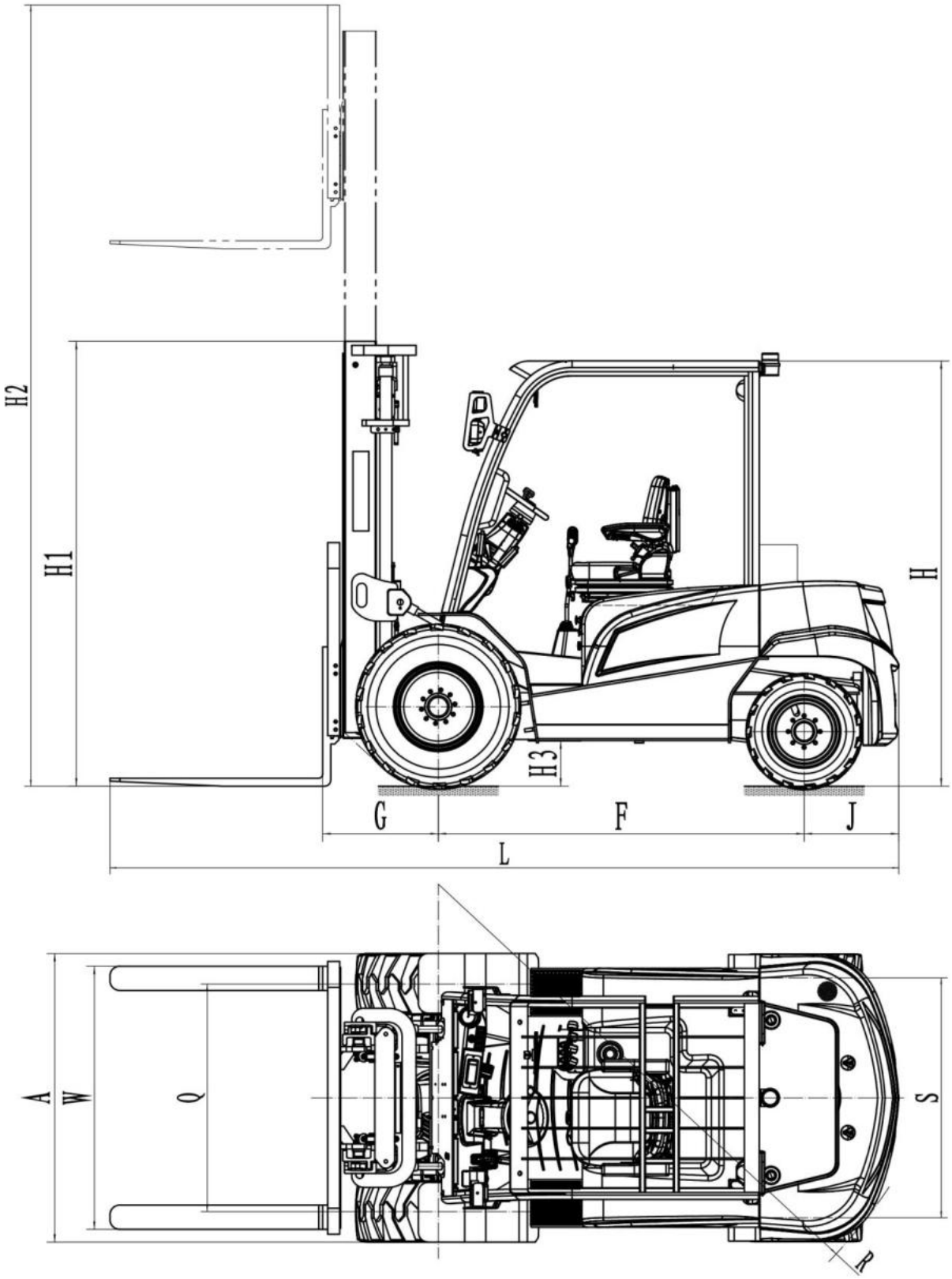

Model			1	R2B25
Rated capacity		kg	2	2500
Load centre		mm	3	500
Lifting Height		mm	4	3000
Free Lifting Height		mm	5	105
Fork size	TxWxL	mm	6	40 x 122 x 1070
Mast Tilting Angle	F/B (α°/β°)	Deg	7	12/12
Overall Dimension	Length (to forkface)	mm	8	2871
	Width A	mm	9	1450
	Height when mast lowered H1	mm	10	2235
	Height when mast extended H2	mm	11	4170
	Height to safeguard H	mm	12	2136
Turning Radius	Min R	mm	13	2730
Front overhang G		mm	14	581
Tread	Front/Q/Rear S	mm	15/16	1143/1205
Ground Clearance	Min H3	mm	17	228
Wheelbase F		mm	18	1870
Fork spread	Min/Max	mm	19	250/1310
Working aisle width with pallet(Ast)*	1000×1200 crossways	mm	20	4860
	800×1200 lengthways	mm	21	4460
Speed	Travel (Laden)	km/h	22	18
	Travel (Unladed)	km/h	23	20
	Lifting (Laden)	km/h	24	320
	Lifting (Unladed)	km/h	25	350
Gradeability	Laden	%	26	28
	Unladed	%	27	28
Service weight	Include Battery Box	kg	28	3140
Tyre	Front × 2		29	12-16.5-12PR
	Rear × 2		30	27x10-12 -12PR
Motor	Driving Motor× 2	kw	31	10×2
	Pump motor	kw	32	15
Battery	Standard	V/A	33	80/320
	Optional	V/A	34	
Controller	Type		35	AC
	Manufacturer		36	ZAPI
Operating Pressure		Mpa	37	20

II. Structure, Principle, Adjustment, and Maintenance of Forklift Truck

1. Battery and Installation

1.1 Overview

Battery, as the energy supply center for the entire vehicle, plays a function for holding the balance of the normal work for the whole system, and correct operation produces extremely huge influence over the performance and service life of the battery group. On this account, routine use and maintenance of battery shall be placed at a quite important position, to enable to play the due operating performance and service life of battery to a maximum extent thereon.

1.2 Structure of Battery

Battery is mainly composed of positive plate, negative plate, separator, battery container cover, and electrolyte.

1.3 Specifications of Battery and Charger

Item / Type	Model	Capacity	Voltage	Individual QTY	Applicable Charger	Plug Fitting Charger
R2B25	80V320Ah	320Ah	80V		CZC7EI-D60V150A	REMA 320

1.4 Storage of Battery

(1)The battery that is delivered from factory without charge shall be stored in doors clean and dry at a temperature of (5~45) ℃. The storage period beginning from the date when battery is delivered from the factory is two years, and the battery initial charging time shall be properly prolonged, if it has been stored more than two years.

(2)For the battery that has been initially charged and delivered from the factory, its storage shall comply with the following aspects:

(a)It shall be stored in doors clean and dry at a temperature of (5~45) ℃, to be ventilated regularly.

(b)Dust dropped on the battery cover and electrolyte dripped on the battery during measurement shall be timely wiped up using (5~10)% soda water solution and main water, to maintain the cleanliness and dryness for the outside surface of battery.

(c)Direct solar radiation shall be avoided, and the battery shall be far away from head sources.

(d)A supplementary charge or a equalizing charge shall be performed to the battery every 30 days using the 2nd-phase current of normal charge.

(e)Please pay attention that too long storage will affect the general service life of battery.

1.5 Use of Battery

Battery Routine Charging Steps:

(1) Container cover and other coverings on battery container body must be removed or opened before charge, if any, to ensure a full dispersion of burnable gas generated during charge, and the covering can be closed after 30 minutes when charge has been completed (only useable after 30 minutes when charge has been completed). Charging room shall be well ventilated, and indoor charging house shall be installed with exhaust fan.

(2) Poke the plug connection for battery cable and battery car cable.

(3) Open the cover place on battery, and measure the density of electrolyte. If the density of electrolyte is smaller than 1.13kg/l (HOPPECKE) or 1.15kg/l (XUNQI), it indicates that the battery has been over-discharged (discharging depth having exceeded 80%). User shall be reminded to avoid such occurrence for many times

which may shorten the service life of battery.

(4) Measure the temperature of electrolyte, and if it is larger than 45℃, then the following steps shall be continued after waiting for battery to be cooled down.

(5) Connect the plug between the battery and the charger cable. If Trak®air (air disturbance system) is equipped, please confirm that the air pipeline has been connected.

(6) Turn on the charging switch of charger, and begin charge.

(7) After charge is completed, firstly turn off the power supply of charger, and then poke the cable plug connection for battery and charger.

(8) If battery is equipped with automatic water liquid supply system, connect the water pipe plug, and remove the plug after charge is completed.

(9) If battery is not equipped with automatic water liquid supply system, it is then required to examine the liquid level height after charge. If liquid level is lower than the allowable height (lower than water filling plug), it is then required to supply distilled water or deionized water compliant with standards (1-2cm upward in the lowest place of water filling plug), but it is not allowed to add any acidic liquid.

(10) Water shall be added after charge, and water addition before charge may possibly give rise to overflow of acidic liquid.

(11) Lastly, connect the cable plug for batter and battery car.

1.6 Service of Battery

(1) Daily Service

(a)Battery shall be charged immediately after discharge each time.

(b)Discharge each time shall not exceed 80% of the total battery capacity.

(c)Battery must be wiped up if any acidic liquid is overspilled, to avoid battery electric leakage.

(2) Weekly Service

(a)If battery is not equipped with automatic liquid adding system, it is required to examine the height of electrolyte after charge. When it is lower than the allowable liquid level (separator height or specified height), it is required to add qualified distilled water to the specified height. When electrolyte is excessive, it shall be extracted to the specified height.

(b)Examine whether or not water is accumulated inside the battery container, and the accumulated water must be sucked up immediately if it is found.

(3) Monthly Service

(a)Before charge is completed, examine the voltages of all the electrode units and the battery, and keep records.

(b)After charge is completed, it is required to measure the density and temperature of each battery unit, and keep records. If huge difference from the previous measurement value is found, professional shall be invited for examination.

(4) Annual Service

(a)Professional shall examine the insulation resistance of forklift truck and the insulation resistance of battery once a year. The insulation resistance for battery is specified as 50Ω/V. The resistance to the entire battery (voltage to reach 20V) is 1000Ω.

(b)Examine the charger once according to the instruction manual, to ensure that respective functions are under normal conditions.

1.7 General Notices

(1) Battery shall be maintained clean and dry, able to avoid generation of creeping current.

(2) Liquid must be sucked out immediately using suction pipe, if any in battery container.

(3) Damage of inside/outside paint or coating of battery shall be mended immediately, if any is found, and the outside container insulation shall be protected, free from corrosion.

(4) Replacement of battery unit shall be carried out by professional, if found.

1.8 Common Failures and Disposal Methods of Battery

Effect	Failure Characteristic	Cause	Treatment Method
Pole Plate Salinization	1. Capacity dropped at normal discharge 2. Specific Gravity Dropped lower than normal value 3. Quick voltage drop at discharge 4. Early generation of air bubble at charge 5. PbSO4 Crystallization Coarse and large	1. Initial charge insufficient 2. Discharging status, and placement time too long 3. Long-term charge insufficient 4. Electro-hydraulic proportion high 5. Liquid level receded, the top of plate exposed to air 6. Electric liquid impure 7. Internal short circuit	1. Overcharging Method 2. Repeated Charging Method 3. Hydropathy Method
Active Matter Excessive Dropout	1. Deposit found inside electric liquid, brown matter rises at charge 2. Batter capacity reduced	1. Drown deposit due to over-large charging current 2. White deposit due to excessive discharge 3. Contaminant present inside battery 4. Dropout in bulk, plate quality issue 5. The cast in paste status, due to long-time proportion or temperature to the high end	1. Rubber shell battery, Plate replaceable, deposit removable 2. To be charge with small current and electric liquid density and liquid level height to be adjusted
Internal Short Circuit	1. Voltage fairly low at charge 2. Air bubble rather few at the end stage of charge 3. Quick temperature rise at charge, no change in electro-hydraulic proportion 4. Discharge capacity low and voltage dropped	1. Conductive substance dropped inside 2. Plate bent, and separator damaged 3. Lots of deposits	1. Conductive substance to be removed 2. Pole plate to be replaced 3. Separator to be replaced
Reversal	1. Batter capacity dropped 2. Voltage obviously reduced	1. Assembling Issue 2. Excessive discharge 3. Insufficient charge, giving rise to plate salinization	1. Battery to be replaced 2. Reversal battery to be charged separately
Electro-hydraulic Issue	1. Proportion, capacity, and voltage to the low end 2. Proportion too high 3. Electrolyte impure, present with contaminant	1. Excessive water addition or plate salinization 2. Add electrolyte by mistake 3. Contents of distilled water and electrolyte contaminants exceeding the specified requirements	1. Density to be adjusted and salinization to be eliminated 2. Some electrolyte to be taken out and density to be adjusted 3. Electrolyte to be replaced

Warning

The contents above related to battery are for reference. Please operate and maintain the battery according to the Battery Operating Manual.

2. Driving Motor and Driving System

2.1 Overview

The Electric Rough-terrain forklift truck driving system is a double front driving structure (one driving motor for left and right, respectively), the driving wheel on each side is directly actuated by driving motor, and the rotational speed of each motor is controlled by swing angle of rear wheel.

Driving motors on respective sides are all connected with Italian PMP transmission, and the two transmissions are both characterized by wet brake. Solid tyres and integrated wheel rims are applied in the driving system.

Refer to the following table for models of front wheel tyres and wheel rims:

Forklift Truck Tonnage	2.5T
Tyre	Refer to Table of Parameters (Solid)
Wheel Rim	9.75-16.5-10 hole

2.2 Transmission

These two transmissions are both typical of double speed reduction, of which the first reduction gear is a cylindrical spiral gear, while and other is the planetary gear, in a compact and small structure. The structures of the transmissions are shown in Fig 2.

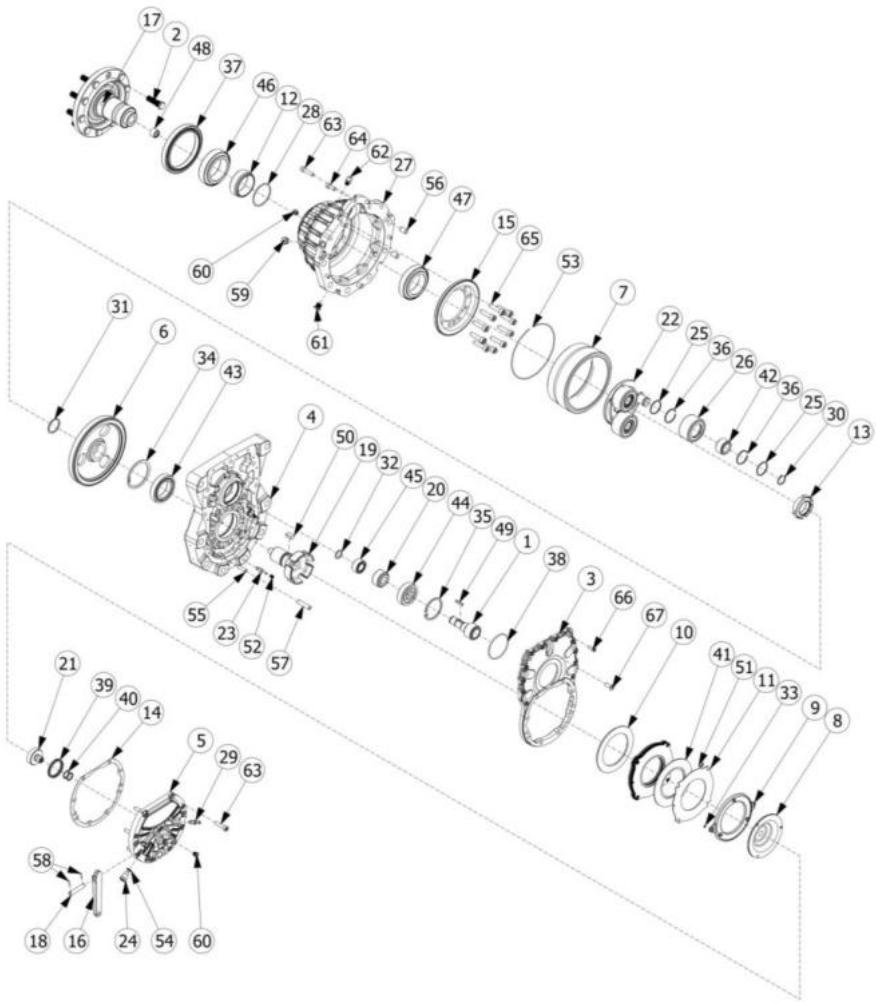

Fig 2-1 PMP Transmission

67	VT6.0010	1	Screw HSCHS UNI5933 M8x25 10.9
66	VC1.0065	12	Screw SHCS M6X16 12.9
65	VC1.0045	10	Screw SHCS M10x40 12.9
64	VC1.0019	3	Screw SHCS M8X20 12.9
63	VC1.0018	12	Screw SHCS M8x35 12.9
62	TAP.0053	1	Breather plug M10x1+washer
61	TAP.0045	1	Magnetic plug M14x1+washer
60	TAP.0025	5	Plug M10x1+washer
59	TAP.0024	3	Plug M14x1.5+washer
58	SP4.0004	2	Elastic pin Ø3X16
57	SP1.0017	4	Dowel pin Ø10x45
56	SP1.0003	5	Dowel pin Ø12x20
55	SP1.0001	2	Dowel pin Ø8x30
54	RO1.0013	1	Washer
53	MOL.0025	1	Elastic ring
52	MOL.0021	2	Spring
51	MOL.0019	24	Brake spring
50	LIN.0037	1	Fitting key B 12x8x20
49	LIN.0033	1	Fitting key B 6x4x25
48	GUR.0002	1	Needle roller cage
47	CU1.0047	1	Roller bearing
46	CU1.0022	1	Roller bearing
45	CRU.0004	1	Needle roller bearing
44	CR2.0002	1	Ball bearing
43	CR1.0026	1	Ball bearing
42	CC1.0011	3	Roller bearing
41	AUX_0012	6	Friction disc
40	AT9.0044	2	Seal Ø18x22.9x2.2 DOT
39	AT9.0039	1	Seal Ø45x54.1x6.3
38	AT5.0107	1	O-ring OR3275 Ø69.52x2.62 viton
37	AT1.0033	1	Seal Ø110x140x14.5
36	AE2.0039	6	Elastic ring SB 40
35	AE1.0010	1	Snap ring for hole UNI 7437 Ø62
34	AE1.0006	1	Snap ring for hole UNI 7437 Ø80
33	AE0.0044	2	Radial ring for shaft UNI7434-3.2
32	AE0.0018	1	Snap ring for shaft SW Ø20
31	AE0.0009	1	Snap ring for shaft UNI 7435 Ø40
30	AE0.0008	3	Snap ring for shaft UNI 7435 Ø24
29	980.0006	1	Bleeder valve
28	875.0027	1	Shims
27	840.0049	1	Gearbox housing
26	835.0095	3	Planet gear
25	800.0020	6	Washer
24	796.0003	1	Service brake connection
23	770.0006	2	Brake pin
22	750.0011	1	Planetary carrier
21	740.0035	1	Brake piston
20	735.0092	1	Pinion
19	735.0091	1	Sun gear
18	715.0014	1	Brake lever pin
17	660.0011	1	Wheel hub
16	615.0006	1	Brake lever
15	520.0069	1	Ring gear carrier disc
14	490.0003	1	Brake seal
13	470.0008	1	Locking nut
12	330.0054	1	Spacer
11	320.0048	7	Steel disc
10	320.0047	1	Spacer disc
9	320.0038	1	Disc pusher
8	320.0030	1	Elastic disc
7	250.0073	1	Planetary ring gear
6	250.0064	1	Spur gear
5	215.0153	1	Brake cover
4	215.0143	1	Gearbox cover
3	215.0093	1	Aluminium cover
2	207.0001	10	Wheel hub bolt
1	010.0050	1	Input shaft
Item	Code	QTY	Description

This truck has no driving axle, and the transmission plays the function of axle.

Brake is the maintenance-free wet disc brake.

Failure Effect	Possible Cause	Removal
Large operation and commutation impact sounds	Too large gear clearance Too large gear wear	To be adjustment To be replaced
Stay noise generated during running process	Low oil level in gear oil tank Too large gear clearance Too large gear wear	Gear oil to be filled and added To be adjusted To be replaced

Parameters of Transmission:

Item		PMS701 Parameter
Weight (Not including oil) kg		57
Oil Rate L		1.2～1.3
Oil Type		SAE80W/APIGL4/UTTO
Foot Brake	Brake Fluid	DOT4
	Control Pressure	60-80 bar
	Normal Pressure (Max Continuous)	70 bar
	Max Pressure	150 bar
	Hydraulic Cylinder Brake Fluid Capacity (Under Normal Condition)	4.6 cm3
	Hydraulic Cylinder Brake Fluid Capacity (Under Max Wearing Condition)	3.2 cm3
Hand Brake	Hand Brake Handle Pull	100N
	Stroke	15 mm
	Wearing Limit Stroke	21 mm

There are three holes on the brake rocker arm:

1. Air Breed Screw Plug – The air bleed screw plug shall be loosened after brake fluid is added, for air bleed.
2. Hand Brake Guy Cable Connecting Head – The wearing limit for hand brake guy cable connecting head is 13mm.
3. Brake Wheel Cylinder Oil Inlet Port – The brake wheel cylinder shall be replaced for leakage.

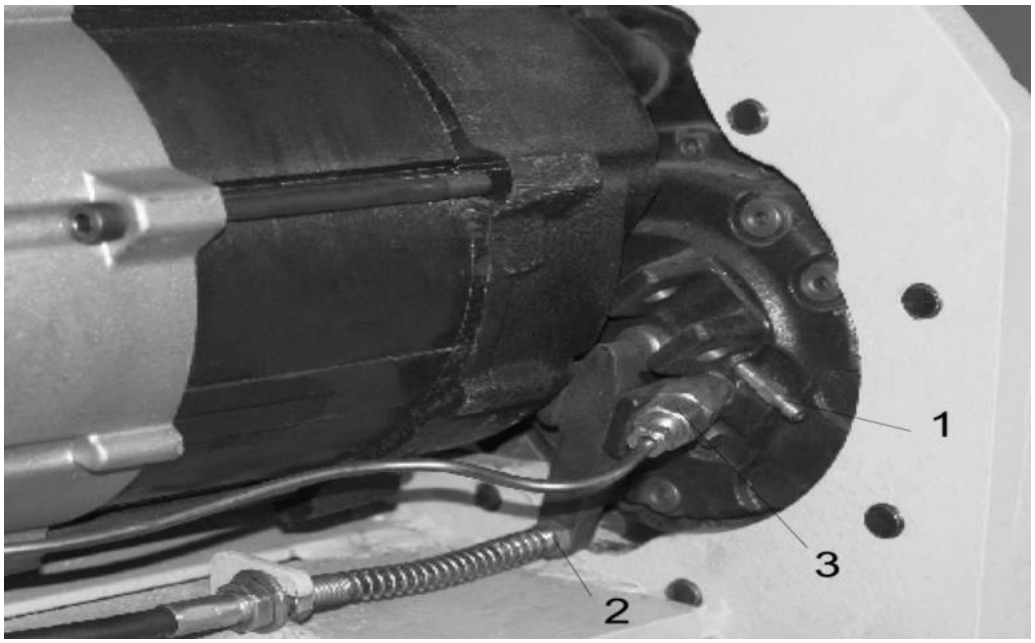

Fig 2-2 PMP Transmission

Please refer to the “PMS701 Maintenance Manual” for more details.

2.3 Driving Motor

2.3.1 Specification of Driving Motor

Type \ Item		Driving Motor Model	Excitation Mode	Rated Power kw	Rated Voltage V	Rated Current A	Rated Speed r/min
R2B25	SUPEREC AC	B8432153GK		10	AC50	135	2050

2.3.2 Conditions of Operating Environment

Motor shall be able to operate normally under following environments:

(1)Altitude not exceeding 1200m

(2)Range of change in ambient air temperature - 25℃～+40℃

(3)Relative humidity up to 100%

3. Pump Motor and Installation

Type \ Item		Pump Motor Model	Excitation Mode	Rated Power kw	Rated Voltage V	Rated Current A	Rated Speed r/min
R2B25	SUPEREC AC	B8422161GK		15	AC50	205	2950

4 Electrical System

4.1 Overview

Electrical system mainly includes battery, traction motor, oil pump motor, motor controller, instruments, and auxiliary electrical equipment (switch, light fitting, and message sound device, etc). Italian ZAPI Controller and adaptive motor are applied.

As dual motor and motor controller driving are applied for running of Electric Rough-terrain Forklift Truck, different from the single motor driving that achieves different speeds of inner wheel and outer wheel at turning using driving axle differential, angle potentiometer is utilized to detect the changes in wheel position angle of steering wheel, to achieve the electronic different speeds through controlling the rotational speed of the two motors, while as data of wheel position angle are introduced, the controller is also able to automatically reduce speed at vehicle turning, which has enhanced the driving safety.

4.2 AC Motor Controller

Form and Characteristics of Controller:

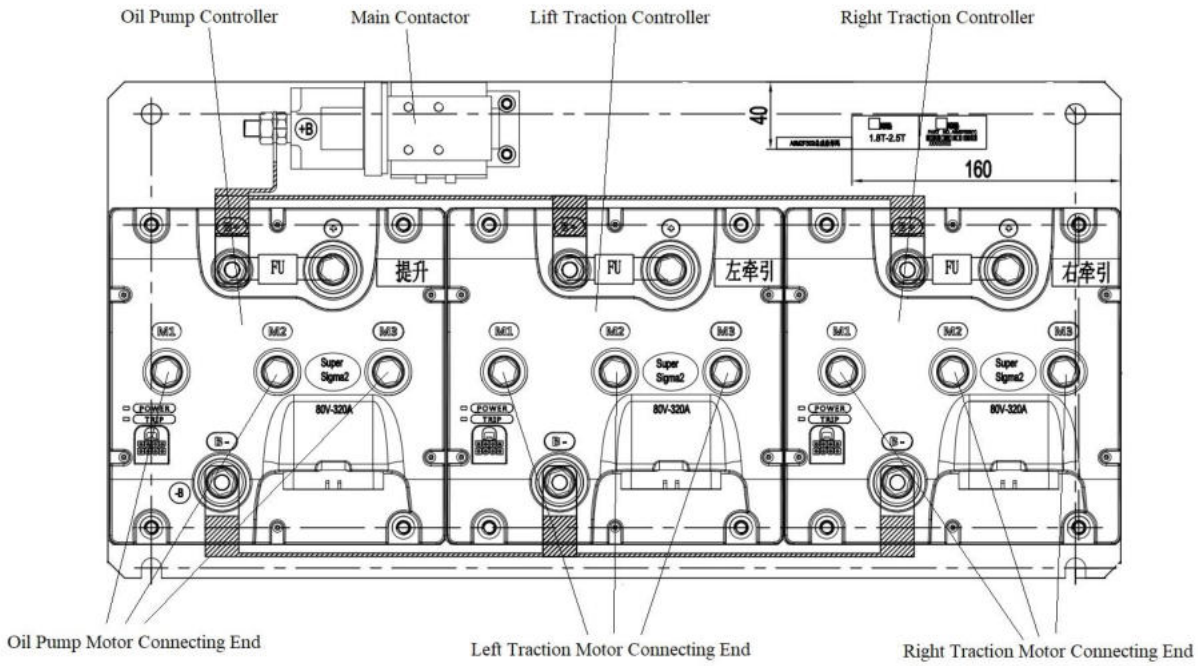

Two set of SuperSigma2 AC Motor Controller made by ZAPI Company is used as traction controller, and one set of SuperSigma2 AC Motor Controller is used as oil pump controller, for the full-exchange controllers of this series of trucks. Motor speed and temperature feedback model micro-processing control, regenerated brake, and CANBAUS communication interface area available, able to very easily conduct precision control over the traction and oil pump of the vehicle, and also able to adjust the motor controller according to different work conditions of operating environments and load types of driving online through hand actuating unit or onboard instruments (authorization required), with a view to achieving the most perfect operating efficiency and performance representation. At the same time, the controller is also provided with comparatively self-contained fault self diagnosis function, able to give out fault coeds of common failures, to facilitate maintainers to analyze the position of failure, to remove failure within a shortest time, and to minimize the loss of working time aroused by vehicle failures.

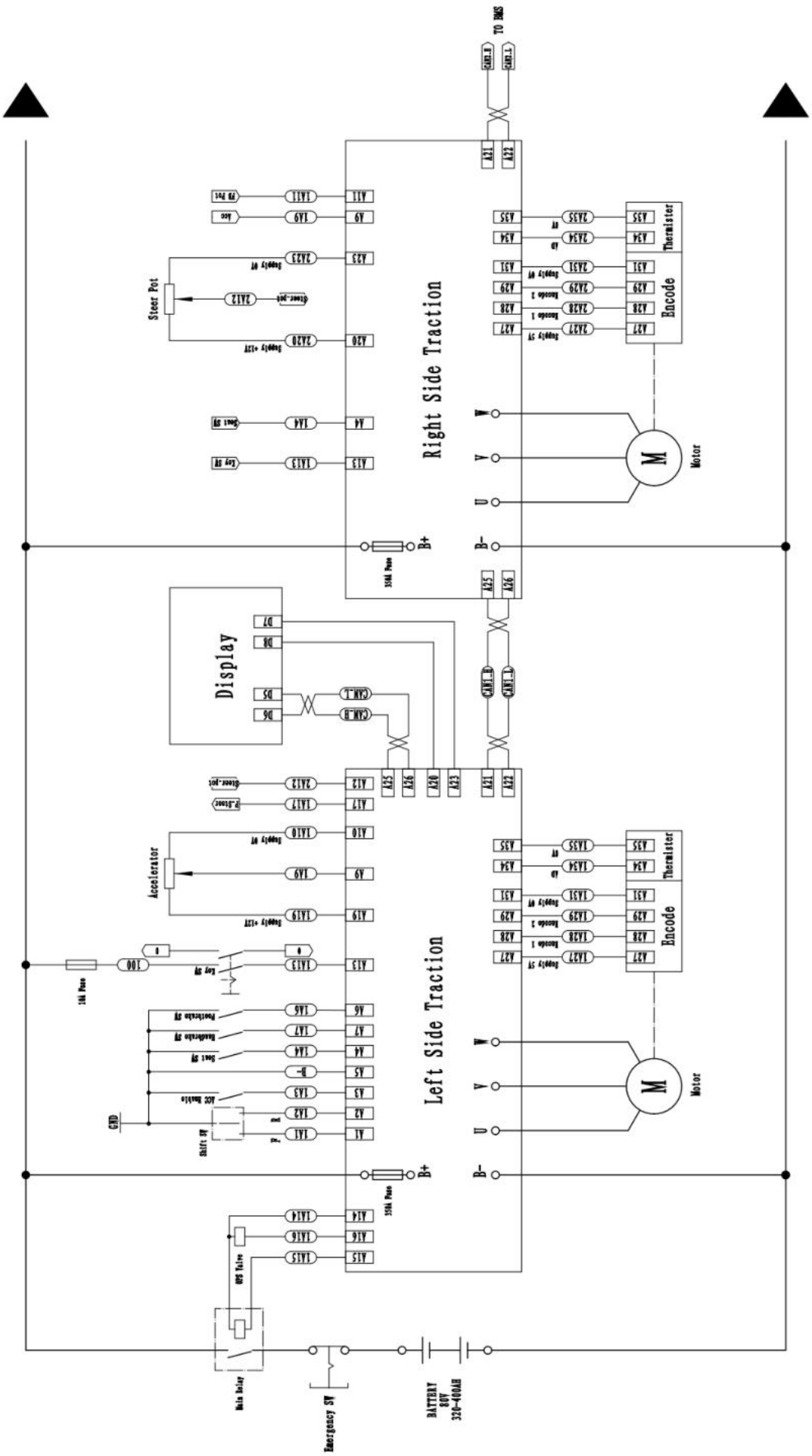
Right Side Traction
Left Side Traction
Display
Steer Pot
Accelerator
Encode
Thermister
Motor
Main Relay
Emergency SW
BATTERY
80V
320-400AH
TO BMS

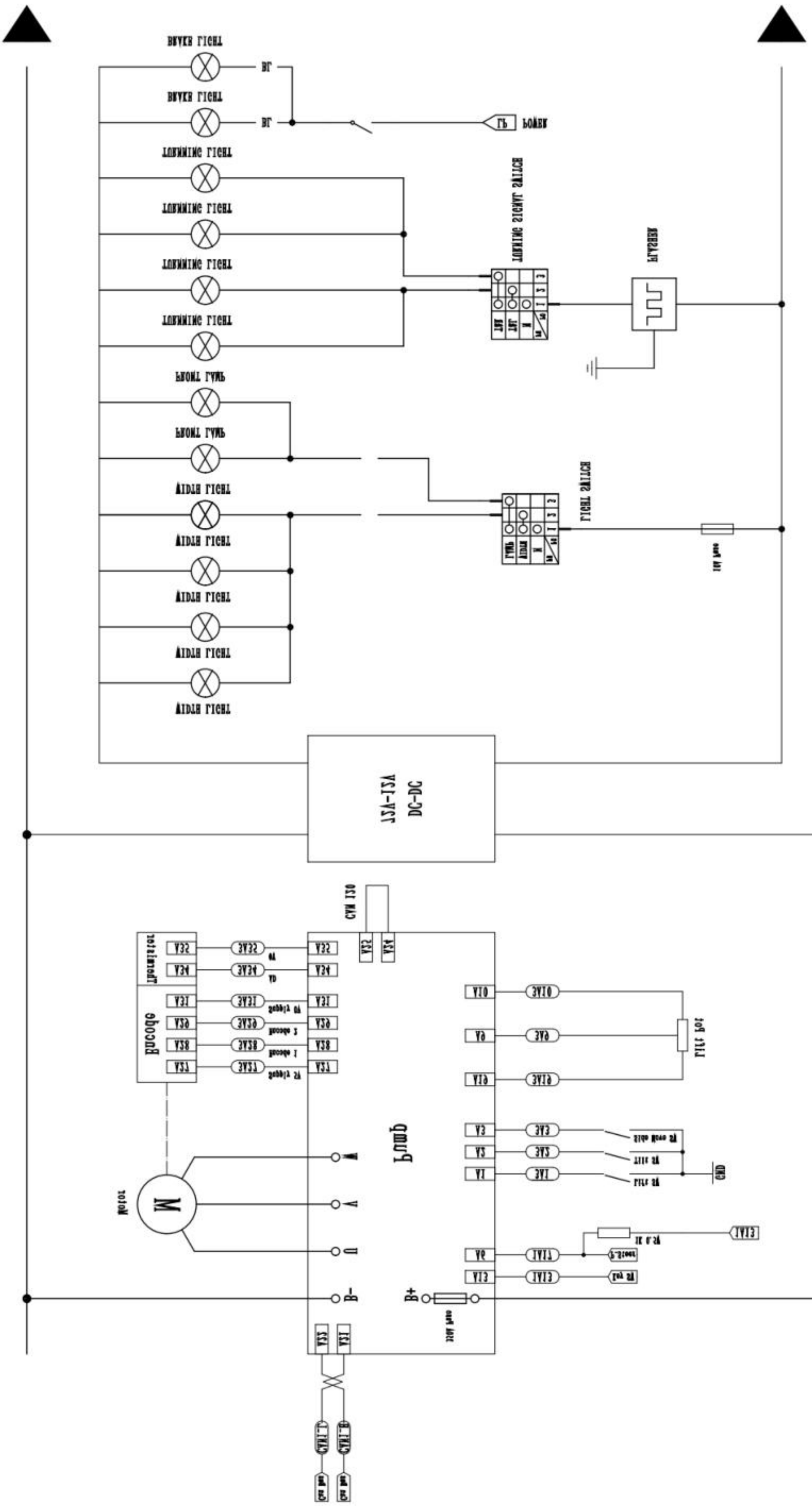
DC-DC
72V-12V
Pump
Motor
Encode
Thermistor
Lift Pot
LIGHT SWITCH
TURNING SIGNAL SWITCH
FLASHER
GND
CAN 120
B+
B-

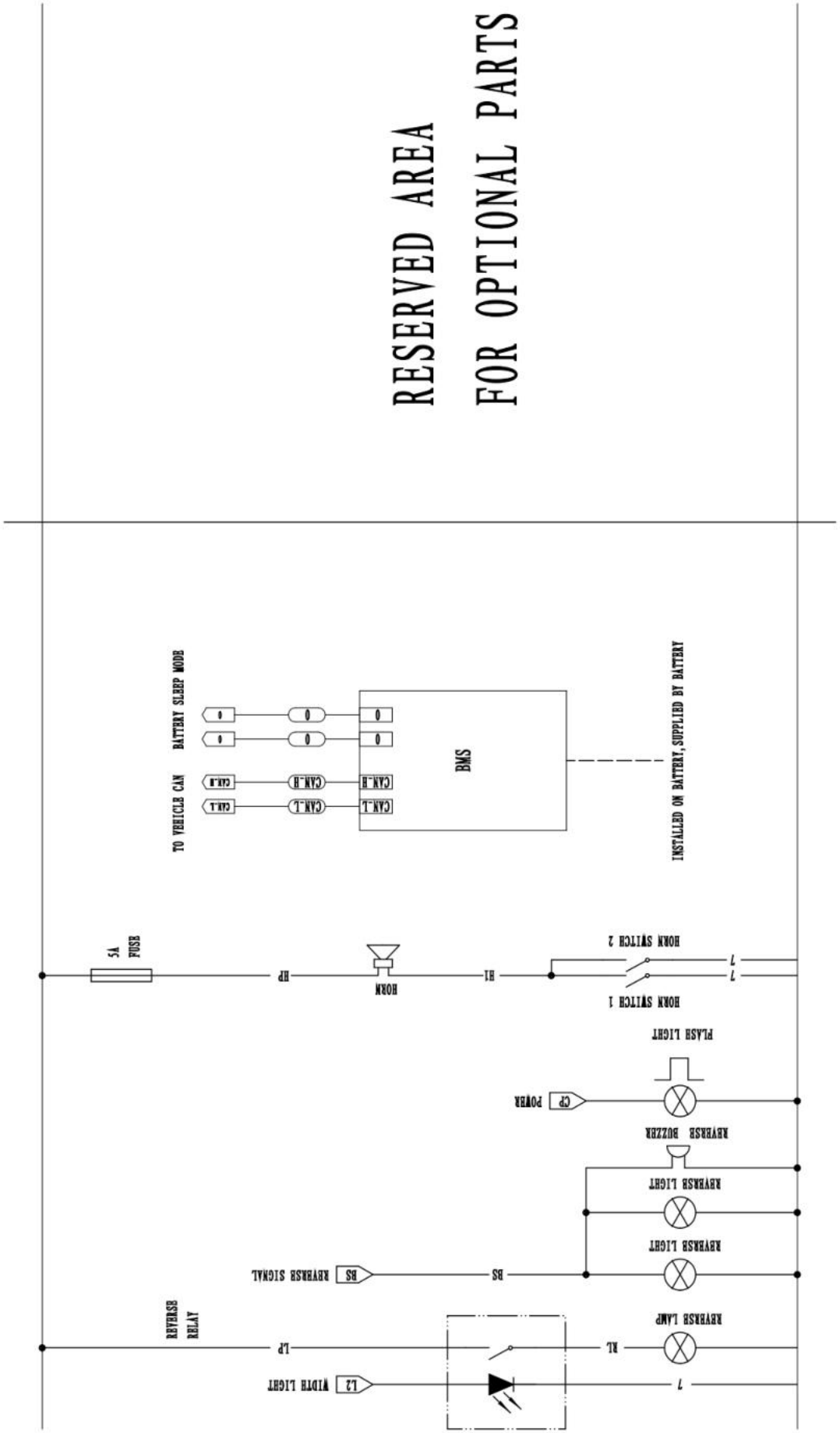
RESERVED AREA
FOR OPTIONAL PARTS
TO VEHICLE CAN
BATTERY SLEEP MODE
CAN_L
CAN_H
CAN_L
CAN_H
BMS
INSTALLED ON BATTERY, SUPPLIED BY BATTERY
5A
FUSE
HF
HORN
HI
HORN SWITCH 2
HORN SWITCH 1
FLASH LIGHT
CP POWER
REVERSE BUZZER
REVERSE LIGHT
REVERSE LIGHT
BS
BS REVERSE SIGNAL
REVERSE LAMP
REVERSE
RELAY
LP
RL
L2 WIDTH LIGHT

4.3 Instruments

The display is CAN-Bus driven and gets its information from the command to the SuperSigma2 controllers.

For standard version, the display can show:

- Hour counter (Key hour and Drive hour)
- Battery charge
- Vehicle speed
- Fault code
- Cutback symbol
- Drive style symbol
- Steer wheel position (Dual Drive Only)

For standard version, the display can send the commands:

- Switch drive style
- Switch cutback
- Change hour counter

4.4 Fault Codes

Traction Common Fault Codes

Error codes are detectable by means of red led on controller (number of flashes correspond to base error code) and in 9.3 Menu 2 "Status".

Base fault Code	Description	Sub fault code	Description
Controller warning faults - Reduces only performance - Fault will reset itself (if possible)			
0	No error	-	-
1	N/A	-	
2	Voltage getting low	1	Battery voltage below absolute minimum
		2	Capacitor voltage below absolute minimum
		3	Battery voltage below LV cut back adjustment (drive cut back active)
		4	Capacitor voltage below LV cut off adjustment (drive cut back active)
3	Inhibit drive/ BDI Cut / BLC via can	1	BDI Cut out (Battery below BDI cut Level)
		2	Pump inhibit input active (Only Pump Software)
		3	BCL via CAN message time out
		4	BCL via CAN message toggle security bit fail
4	Voltage getting high	1	Battery voltage above absolute minimum
		2	Capacitor voltage above absolute minimum
		3	Battery voltage above High Voltage cut back adjustment (brake cut back active)
		4	Capacitor voltage above High Voltage cut back adjustment (brake cut back active)
5	Motor temperature high	-	
6	Controller temperature high	-	
7	Adjustment out of range	1	Master does not share the line contactor but any one of the slave does
		2	Master shares the line contactor but one of the requested slave doesn't
		3	A slave node number larger than last sharing node also share the line contactor
		4	WigWag is enabled but walkie is not
		5	inching and walkie are both enabled
		6	dual motor with speed control mode
		7	shared LC and Control Via CAN HMI both active
		8	Inching and Control Via CAN HMI both active
		9	Walkie and Control Via CAN HMI both active
		10	Control Via CAN HMI enabled and CAN node number set as master
		11	Hill hold Enabled and Torque control enabled
		12	---
		13	CAN control type options are active but Control Via CAN HMI is not enabled.
		14	Can Node ID via digital input enabled but control but Control Via CAN HMI is not enabled.
		15	means Shared Line Contactor HMI option is activated ("ShareLC">=2) on but not control via CAN HMI active (CANMsgs>=4). Solution set CANMsgs < 4.
		16	Shared Line contactor HMI "master node" ("CAN node") is higher/equal than last node ("LstNode"). This happens in the controller with the setting "ShareLC"=2 if "CAN node">= "LstNode", that is a non-sense. Solution: check node assignment, and make sure "CAN node" < "LstNode

Base fault Code	Description	Sub fault code	Description
		17	Shared Line contactor HMI “slave node” “CAN node”) is lower/equal than Shared Line contactor HMI “master” node (defined in “LstNode”). This happens in the controller with the setting “ShareLC”=3 if “CAN node”<= “LstNode”, that is a non-sense. Solution: check node assignment, and make sure “CAN node” > “LstNode”
		< 999	First digit: menu number Last 2 digits: adjustment number within menu
		999	Power PCB doesn't match firmware
8	Default adjustments used	-	

Base fault Code	Description	Sub fault code	Description
Drive error faults - Commences gracefull neutral brake – Requires a neutral recycle action to reset fault			
9	Memory chip fault	> 0	Contact Superec
10	Both forward and reverse inputs active	-	
11	Ride-on: Seat switch not closed or timed out Walkie: Tiller switch not closed	-	
12	Power up sequence fault	1	Traction: FS1 switch active at power up
		2	Traction: Forward switch active at power up
		3	Traction: Reverse switch active at power up
		4	Pump: speed 1 or pump pot active at power up
		5	Pump: speed 2 active at power up
		6	Pump: speed 3 active at power up
		7	Pump: speed 4 active at power up
		8	Pump: speed 5 active at power up
		9	Inching: Forward switch active at power up
		10	Inching: Reverse switch active at power up
		11	Inhibit direction change fault
		12	CAN HMI Safety Stop 1 switch inactive fault
13	Accelerator more than 50% at power up	1	Normal accelerator type high at power up
		2	Wig-wag high at power up
14	Inching sequence faults	1	Forward switch active when inching
		2	Reverse switch active when inching
		3	FS1 switch active when inching
		4	Seat switch active when inching
		5	Foot Brake switch active when inching
		6	Hand Brake active when inching
		7	Both inching buttons active when inching
		8	Inching buttons active when normal drive
	Belly switch active	-	
Soft error faults - Immediately stops pulsing - Requires a neutral recycle action to reset fault			
15	Supply voltage fault	1	+5 V supply voltage too low
		2	+5 V supply voltage too high
		3	+14 V supply voltage too low
		4	+14 V supply voltage too high
16	N/A	-	
17	Battery voltage too low	1	Battery voltage below Low Voltage absolute minimum
		2	Capacitor voltage below Low Voltage absolute minimum
		3	Battery voltage below Low Voltage error adjustment
		4	Capacitor voltage below Low Voltage error adjustment
18	High sided mosfets short circuit	1	M1 mosfets
		2	M2 mosfets
		3	M3 mosfets
19	Motor stall protection	-	

Base fault Code	Description	Sub fault code	Description
Hard error faults - Immediately stops pulsing and open line contactor – Cannot be reset (only by a key switch recycle)			
20	Hardware over current detected	1	Positive overcurrent detected during initialization
		2	Negative overcurrent detected during initialization
		3	Positive overcurrent detected
		4	Negative overcurrent detected
		> 4	Contact Superec
21	Contactor coil driver fault (e.g. short circuit)	1	Digital contactor output 1 short circuit during initialization
		2	Digital contactor output 1 short circuit at closing
		3	Digital contactor output 1 short circuit when closed
		4	Digital contactor output 2 short circuit during initialization
		5	Digital contactor output 2 short circuit at closing
		6	Digital contactor output 2 short circuit when closed
		7	Digital contactor output 3 short circuit during initialization
		8	Digital contactor output 3 short circuit at closing
		9	Digital contactor output 3 short circuit when closed
		10	Digital output 4 short circuit during initialization
		11	Digital output 4 short circuit at closing
		12	Digital output 4 short circuit when closed
		13	Unknow fault
22	Voltage is too high	1	Battery voltage above High Voltage absolute maximum
		2	Capacitor voltage above High Voltage absolute maximum
		3	Battery voltage above High Voltage error adjustment
		4	Capacitor voltage above High Voltage error adjustment
23	Low sided mosfets short circuit in neutral	1	M1 mosfets
		2	M2 mosfets
		3	M3 mosfets
24	Hardware fail safe fault	1	Cannot finish checking the hardware fail safe
		2	Hardware fail safe feedback is low at startup
		3	Hardware fail safe feedback is high during toggling
		4	Hardware fail safe feedback is low after toggling stops
		5	Hardware fail safe encountered an unknown error
		6	Hardware fail safe is not alive during normal run
		7	Main loop is stuck
		8	Software watchdog caused a reset. Recalculation is disabled now!
25	Line contactor fault (e.g. short circuit)	1	Could not discharge the capacitor bank
		2	Capacitor bank dit not charge sufficiently to safely close the line contactor
		3	Line contactor opened inadvertently
26	Thermal shutdown fault (only for minimum pump speed fault)	1	Pump thermal shutdown
		2	Pump low voltage shotdown
27	Low sided mosfets short circuit during power up and before line contactor is closed	1	M1 mosfets
		2	M2 mosfets
		3	M3 mosfets

Base fault Code	Description	Sub fault code	Description
Hard error faults - Immediately stops pulsing and open line contactor - Cannot be reset (only by a key switch recycle)			
28	Wire off detected	1	Quadrature encoder sensor wire off or noise detected (AC only)
		2	5 V supply wire off detected
		3	0 V supply wire off detected
		4	Wig-wag out of safety range
		5	Motor Temperature Sensor wire off
29	CAN node fault	1	shared Line Contactor slave time out fault
		2	shared Line Contactor Master fails to broadcast to slaves
		3	shared Line Contactor requested slave is not found by master
		4	shared Line Contactor master time out fault
		5	Control Via CAN HMI timeout (not receive CAN Drive Command Message from VCU)
		6	Control Via CAN HMI security bit error (VCU fails to toggle security bit)
		7	Control Via CAN HMI enable switch/wire is not connected
		13	Can Node ID via digital inputs is detected to 0, check input status
30	Motor overspeeding	1	Motor speed is too high to commence safe pulsing (speed is > 80 % of maximum motor speed)
		2	Motor speed is higher than absolute maximum speed (Check Absolute Maximum Speed)
31	Motor fault	> 0	See table "Motor sub error codes" for ACIM, PMS or IPM
32	Motor Module initialization error	> 0	See table "Motor sub error codes" for ACIM, PMS or IPM
33	Motor Module configuration inconsistency	> 0	See table "Motor sub error codes" for ACIM, PMS or IPM
34	Motor Module parameter inconsistency	> 0	See table "Motor sub error codes" for ACIM, PMS or IPM
35	Current sensor calibration fault	1	Could not initialize the calibration
		2	Time out during calibration
36	Controller temperature over 100 degree	-	
39	Generic time out	1	Time out on configuration upload
		2	Time out on getting stable inputs
		3	Time out on motor ready
40	System Fault	> 0	Contact Superec (see also table "System Codes")

5. Steering device and installation

5.1 Overview

Steering device and installation is mainly composed of steering wheel, steering hub column, connecting shaft and hub column bracket. The upper universal joint of the steering device is connected to the steering wheel through the steering hub column, the lower part is connected to the steering through the connecting shaft, and the steering hub column can be tilted to the appropriate location toward the front and back, as shown in Figure 5-1

Steering device and installation structure are shown in Figure 5-2

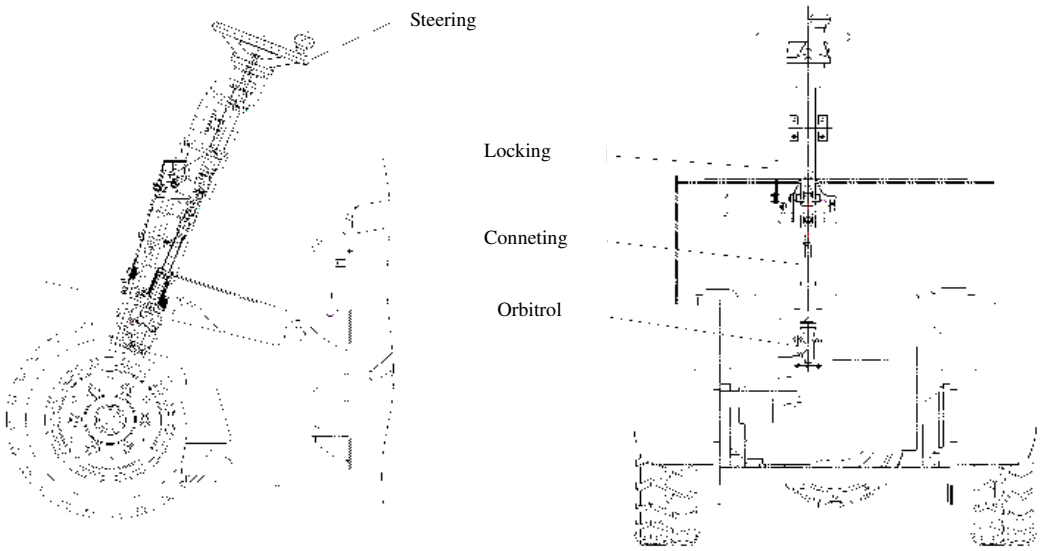

Figure 5-1 Steering device

5.1.1 Inspection after re-installation of steering system

(1) Turn the steering wheel toward the left and right to check whether the left and right force is uniform and whether the rotation is smooth;

(2) Check whether the hydraulic piping layout is correct, and whether the left and right steering is installed reversely;

(3) Top up the rear wheels, slowly turn the steering wheel toward the left and right, repeat for several times, and remove the air in the hydraulic piping and cylinder.

5.1.2 Steering system fault diagnosis

Problem	Reason analysis	Elimination method
Fail to turn the steering wheel	Oil pump is damaged or malfunctions	Replace
	Hose or joint damaged or blocked	Replace or clean
The steering wheel feels heavy	The safety valve pressure is too low	Adjust the pressure
	There is air in oil pipe	Remove the air
	Steering reset fails, and the positioning spring is broken or lacks of elasticity	Replace the spring
	Gas leakage in the steering cylinder is too big	Check the piston sealing
Forklift crawls or swings	The spring is broken or has no elasticity	Replace
Loud working noise	Low oil level in the fuel tank	Refuel
	The suction pipe or oil filter is clogged	Clean or replace
Oil leakage	The guide sleeve sealing of the steering cylinder is damaged or the pipeline or joint is damaged	Replace

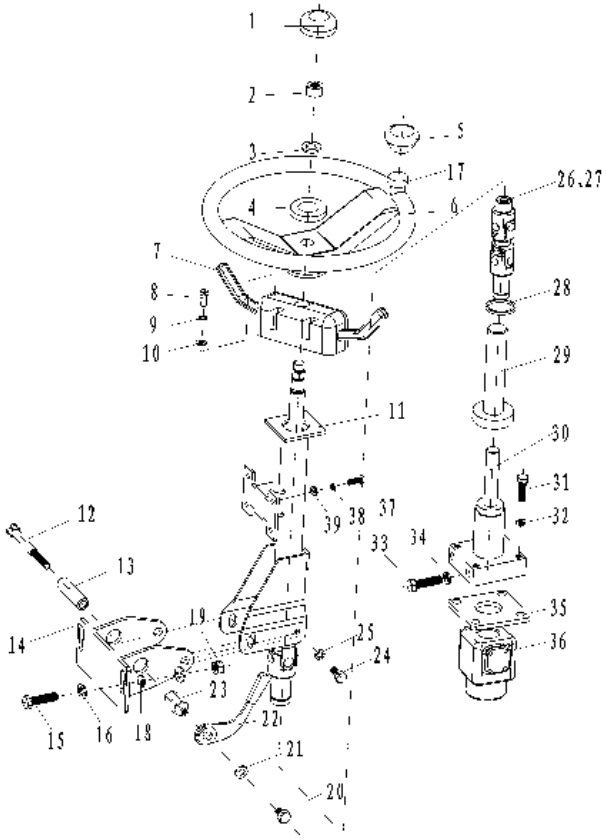

1. Cover	11. Steering hub column	21. Washer	31. Bolt
2. Hexagon thin nut	12. Bolt (left-handed rotation)	22. Locking handle	32. Washer
3. Flat washer 16	13. Casing	23. Nut	33. Bolt
4. Horn touch rod riveting assembly	14. Hub column bracket	24. Bolt	34. Washer
5. Ball cover	15. Bolt	25. Washer	35. Adjustable pad
6. Steering wheel	16. Flat washer	26. Washer	36. Steering
7. Steering switch	17. Ball	27. Bolt	37. Cross recess pan head screw
8. Cross recess pan head screw	18. Spring washer	28. Strapping tape	38. Spring washer
9. Spring washer	19. Nut	29. Dust guard	39. Flat washer
10. Flat washer	20. Bolt	30. Connecting shaft assembly	

Figure 5-2 Steering device and installation

6. Steering Axle and Installation

6.1 Overview

Steering axle is in a type of welded structure of a box cross section (Fig 5-1), and it is composed of steering axle body, steering cylinder, link, and steering wheel. Slider-crank mechanism is applied to steering trapezium. The steering knuckle is actuated by cylinder piston rod through link for rotation, for steering wheel to deflect, thus to achieve steering. Steering axle is prized on the tail bracket in the rear part of truck frame using bolts through bearing seas via forward and backward pin shafts, for the axle body is able to swing round the pin shaft. One left and right steering knuckle is available respectively on left and right of steering axle. The rear wheel hub is mounted on the shaft of steering knuckle using two tapered roller bearings. The wheel is prized on the wheel hub through wheel rim. Oil seal is fitted on the inner side of bearing, for lubricating grease to be retained inside the wheel hub and the steering knuckle.

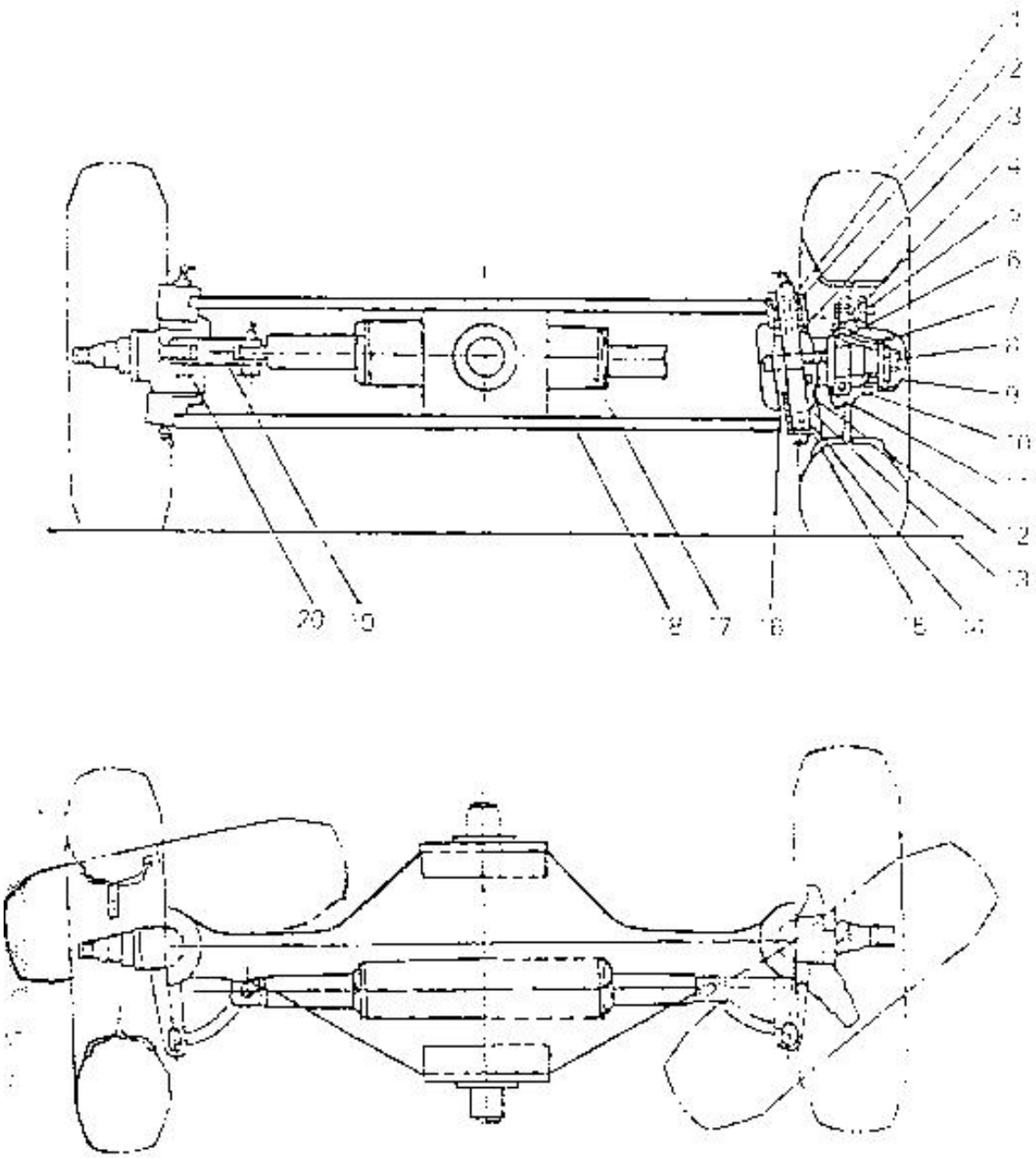

Fig 6-1 Steering Axle

1. Oil Seal	7. Tapered Roller Bearing	13. Needle Roller Bearing	19. Link
2. Needle Roller Bearing	8. Lock Nut	14. Oil Seal	20. Pin Shaft
3. Thrust Bearing	9. Wheel Hub Cover	15. Steering Knuckle King Pin	
4. Oil Seal	10. Steering Wheel Hub	16. Steering Knuckle	
5. Wheel Hub Nut	11. Lock Pin	17. Steering Cylinder	
6. Tapered Roller Bearing	12. Adjusting Washer	18. Steering Axle Body	

6.2 Steering Knuckle and Steering King Pin

Steering knuckle is mounted between the upper and lower shaft sleeves on the two ends of steering axle body using steering knuckle king pin, thrust bearing, and gasket. The middle part of king pin is locked on steering knuckle using lock pin, while the two ends of king pin are supported by needle roller bearings pressed on the axle body. Oil seals are mounted on the two ends of needle roller bearings, and oil cup is fitted on the king pin.

6.3 Adjustment for Pre-tightened Load of Steering Wheel Bearing

(1) As indicated in Fig 5-2, the internal cavities of internal and external bearings as well as wheel hub cover are added with lubricating grease, and at the same time some lubricating grease shall also be coated on the lip of oil seal.

(2) Fix the bearing outer ring onto the wheel hub, and mount the wheel hub onto the shaft of steering knuckle.

(3) Mount the flat washer and tighten the slot nut, and its torque is 206-235N.m (21-24kgm). Loosen the slot nut and then tighten this nut, with its torque as 9.8N.m (1kgm).

(4) Knock at the wheel hub gently using wood hammer, turn the wheel hub manually by 3-4 circles, to ensure a steady rotation, and measure the rotating torque, with its value as 2.94-7.8N.m (0.3-0.8kgm).

(7) When rotating torque is higher than the specified value, it may be returned by 1/6 circles, and then measure its rotating torque.

(8) Lock up the slot nut using cotter pin, when specified rotating torque is reached.

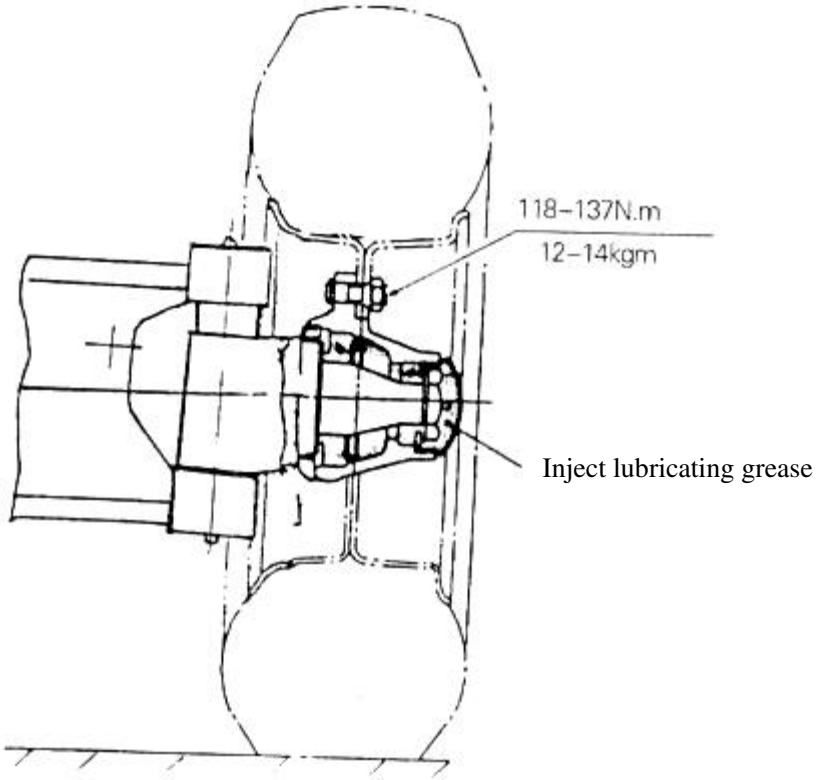

Fig 6-2 Adjustment for Pre-tightened Load

7. Hand Brake Operation

7.1 Overview

Hand pull flexible shaft mechanism is applied to the hand brake device, and it shares one automatic power block brake actuated to the front wheel with foot brake. Hand brake is used only when the forklift truck is parked.

7.2 Parking Brake Operation Device

Parking brake handle is in cam type, able to be used for regulator to adjust the braking force located at the top part of brake handle.

Adjustment of Braking Force

Turn the regulator clockwise, to increase the braking force and turn the regulator counterclockwise, to reduce the braking force.

Pull: 200～300 N

Installation of hand brake is indicated as in Fig 7-1:

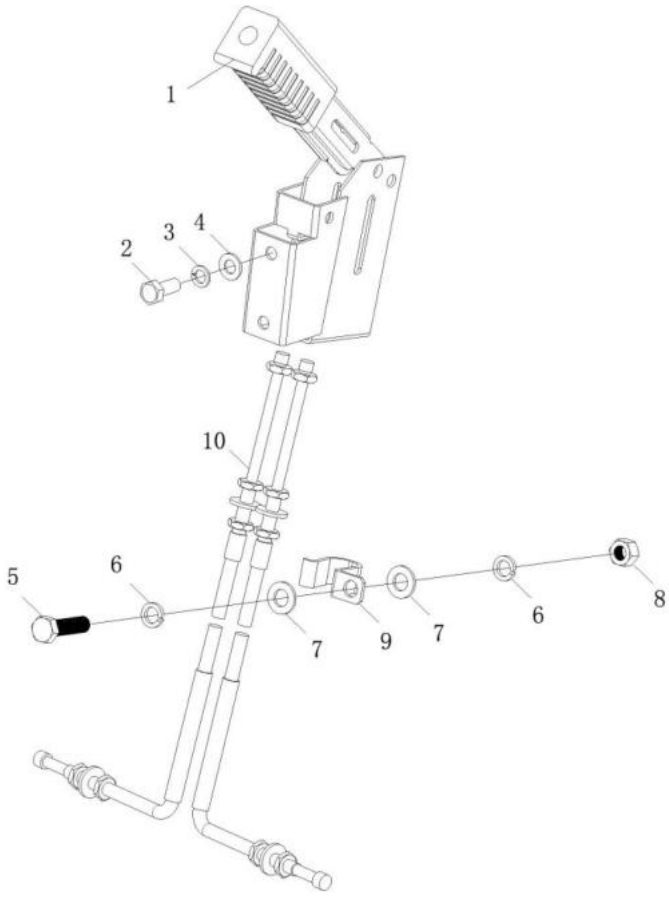

1. Hand Brake Assembly	2. Bolt M10×25	3. Washer 10	4. Washer 10
5. Bolt M12×45	6. Washer 12	7. Washer 12	8. Nut M12
9. Stay Clip	10 Brake Stay		

Fig 7-1 Installation of Hand Brake Operation

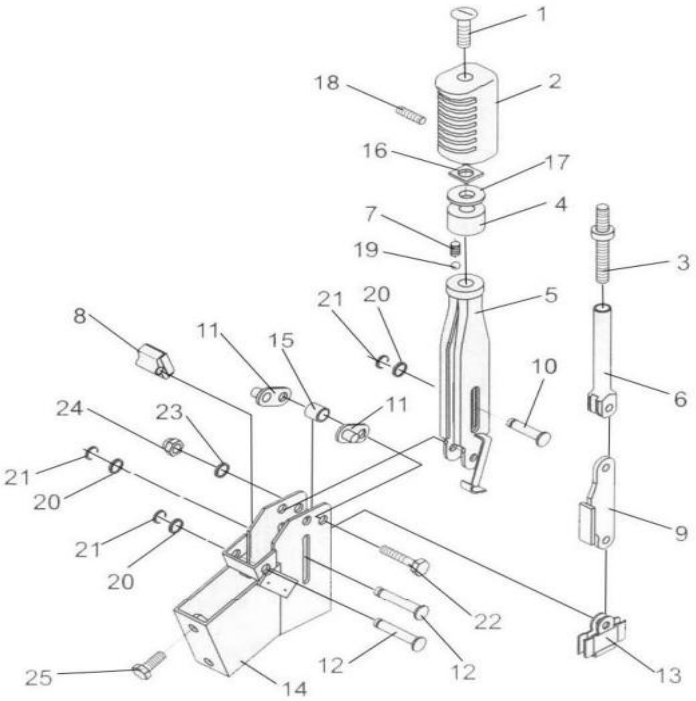

1. Dolly Bar Assembly
2. Plastic Handle Cover
3. Screw Stem
4. Handle Seat
5. Brake Handle Body
6. Tie Bar Body
7. Spring 1×5.5×10.8
8. Stop Block
9. Drawplate Assembly
10. Flat-head Pin B8x35
11. Support Plate Assembly
12. Flat-head Pin B8×35
13. Hanging Rack
14. Bracket Assembly
15. Washer II
16. Square Nut M8
17. Large Washer 8
18. Hexagon socket set screws with cup point M4×3.7
19. Steel Ball q6
20. Washer 8
21. “E”-Ring
22. Bolt M10×45
23. Spring Washer 1
24. Combination Cover Nut
25. Bolt M10×25

Fig 7-2 Hand Brake Assembly

Fault Diagnosis

Obstacle	Possible Cause	Corrective Action
Braking Force Insufficient	Oil leak in brake pipeline	To be corrected and oil to be re-added
	Air present in brake pipeline	Air to be removed
	Brake master cylinder function abnormal	To be corrected or replaced
	Oil pipeline blocked	To be cleaned
Brake Seized	Brake pedal without free stroke	To be adjusted
	Piston cup damaged	To be replaced
	Return spring weak or broken	To be replaced
	Backflow hole of brake master cylinder blocked	To be cleaned
	Oil pipe blocked	To be cleaned

8. Foot Brake Operation

8.1 Overview

Foot brake operation is composed of foot brake assembly, as well as left and right brake oil pipes.

8.2 Foot Brake Pedal

The structure of foot brake pedal is indicated as in Fig 8-1, and it is installed on the vehicle chassis through bracket.

The foot pedal converts the pedal force acted on the pedal through the push rod of brake master cylinder into brake fluid pressure.

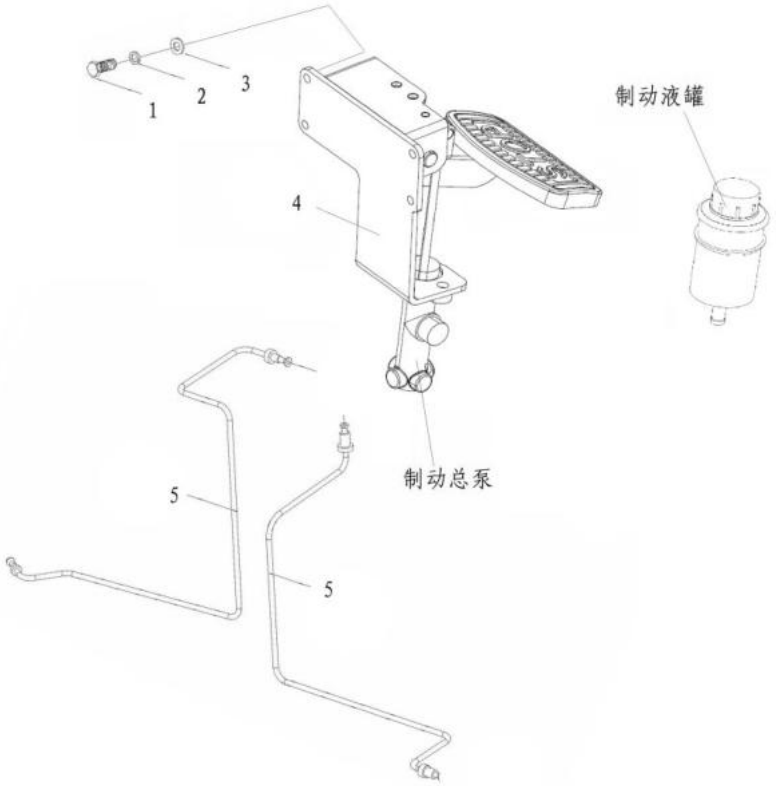

1. Bolt M8×25 2. Washer 8 3. Washer 8 4. Foot Brake 5. Brake Fluid Pipe

Fig 8-1 Foot Brake Operation

8.2.1 Adjustment of Foot Brake Pedal

(1) Adjust the push rod to be short.

(2) Adjust the catch bolt, to adjust the pedal height as indicated in Fig 8-2.

(3) Push down the brake pedal, and adjust the push rod to be long, until the front end of push rod contacts the master cylinder pist Brake Fluid Tank

(4) Screw down the lock nut for the push rod.

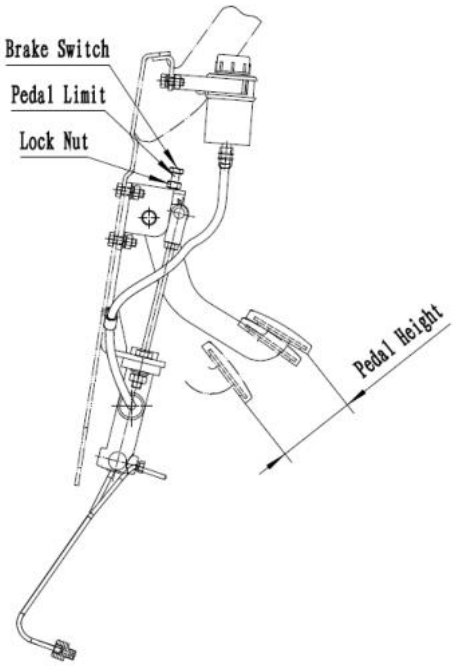

Fig 8-2

▲ Adjustment of Brake Switch

(a)Loosen the lock nut for brake switch, after the height of brake pedal has been properly adjusted.

(b)Pull off the plug and allow the lead wire to separate.

(c)Turn the switch, for Clearance A =1 mm.

(d)Confirm that the brake light shall be turned on when brake pedal is pushed down.

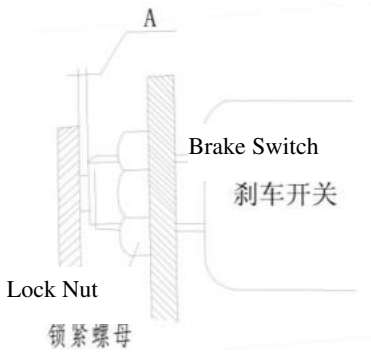

Fig 8-3

8.3 Brake Master Cylinder

The master cylinder includes a valve seat, an one-way valve, one and return spring, as well as cup, piston, and auxiliary cup. Its top part is fixed using stopping washer and stopping steel wire, and its outside part is protected through rubber dust cover. The master cylinder piston acts through push rod based on operation of brake pedal. When brake pedal is pushed down, the push rod pushes the piston forward, and the brake fluid in the cylinder body returns to the oils storage tank through return oil port, until the main cup blocks up the return oil hole. After the main cup has pushed the return oil port, the brake fluid in the front cavity of cylinder body is compressed and opens the one-way valve, thus flows to the wheel cylinders through brake pipeline, the way respective wheel cylinders extend outwards, for brake block friction plate and brake drum to contact each other, achieving the effect of speed reduction or brake. At this point, the rear cavity of piston is supplied with brake fluid from return oil port and oil inlet port. When brake pedal is loosened, the piston is pressed backward by return spring, and at the same time the brake fluid in respective brake wheel cylinders will also be compressed by brake block return spring, for the brake fluid to return to the master cylinder (the front cavity of piston) through one-way valve. The piston will return to its original position, the brake fluid in the master cylinder will return to the return oil tank through return oil port, and the pressure of one-way valve is adjusted to a certain proportion with the remaining pressure in brake pipeline and brake wheel cylinders, for the cup of wheel cylinder to be correctly placed to prevent oil leak, as well as to eliminate air resistance possibly generated during emergency brake. The structure of brake master cylinder is indicated as in Fig 8-4.

1. Lock Nut	5. Stopping Washer	9. Spring
2. Push Rod	6. Auxiliary Cup	10. One-way Valve
3. Dust Cover	7. Piston	11. Valve Seat
4. Stopping Steel Wire	8. Main Cup	12. Cylinder Body

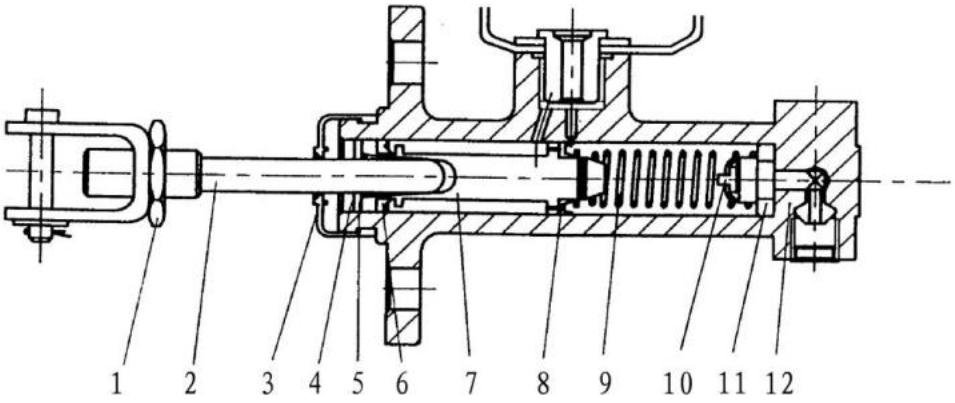

Fig 8-4 Brake Master Cylinder

Problem	Analysis of Cause for Generation	Removal Method
Poor Brake	1. Oil leak with brake system	To be repaired
	2. Clearance of brake clearance not properly adjusted	Regulator to be adjusted
	3. Brake over-heated	Examine whether or not skidding exists
	4. Poor contact of brake drum and friction plate	To be re-adjusted
	5. Contaminant attached on friction plate	To be repaired or replaced
	6. Contaminant blended into brake fluid	Brake fluid to be examined
	7. Brake pedal (micro valve) improperly adjusted	To be adjusted
Noise Present with Brake	1. Surface of friction plate hardened or contaminant attached on it	To be repaired or replaced
	2. Bottom plate distorted or bolt loosened	To be repaired or replaced
	3. Brake block distorted or installation incorrect	To be repaired or replaced
	4. Friction block worn-out	To be Replaced
	5. wheel bearing loosened	To be repaired
Un-uniform Brake	1. Oil stain present on friction surface	To be repaired or replaced
	2. Brake clearance not properly adjusted	Regulator to be adjusted
	3. Failure of wheel cylinder	To be repaired or replaced
	4. Return spring of brake block damaged	To be replaced
	5. Brake drum deflected	To be repaired or replaced
Weak Brake	1. Oil leak with brake system	To be repaired or replaced
	2. Clearance between brake blocks not properly adjusted	Regulator to be adjusted
	3. Air blended in brake system	Air to be bled
	4. Brake pedal wrongly adjusted	To be readjusted

9. Working Oil Tank and Installation

9.1 Overview

Working oil tank and installation are mainly composed of oil tank, oil tank cover plate, magnet, filter core, breather, oil tank cover, drain plug, and gasket, etc.

9.2 Hydraulic Oil Tank

The hydraulic oil tank for Electric Rough-terrain forklift truck is on the left tank body of vehicle chassis. Oil suction filter is fitted in the oil tank, to ensure a supply of clean oil.

10. Hydraulic System

10.1 Overview

Hydraulic system is composed of oil pump, multi-way valve, steering gear, oil pipe, joint, and other components. The high-pressure oil from main oil pump reaches the priority valve, divided into two circuits through it, one way to multi-way valve, to be sent to listing cylinder or tilting cylinder through multi-way valve high-pressure oil, and when lifting and tilting two slide valves are located at neutral position, the priority valve will not supply oil. When lifting slide valve is pushed, the lower part of the lifting cylinder piston is connected with low pressure, for piston rod to drop depending on dead weight or cargo weight. At this point the oil from listing cylinder passes the one-way valve for dropping speed to be controlled, and the priority valve will not supply oil. When tilting slide valve is operated, the high-pressure oil flows into one cavity of tilting cylinder, and the other side is connected with low pressure, for the mast to achieve the tipping-backward and tipping-forward actions. The other circuit flows to steering gear, giving priority to ensure the operation of steering system.

Fig 10-1 is the hydraulic schematic drawing:

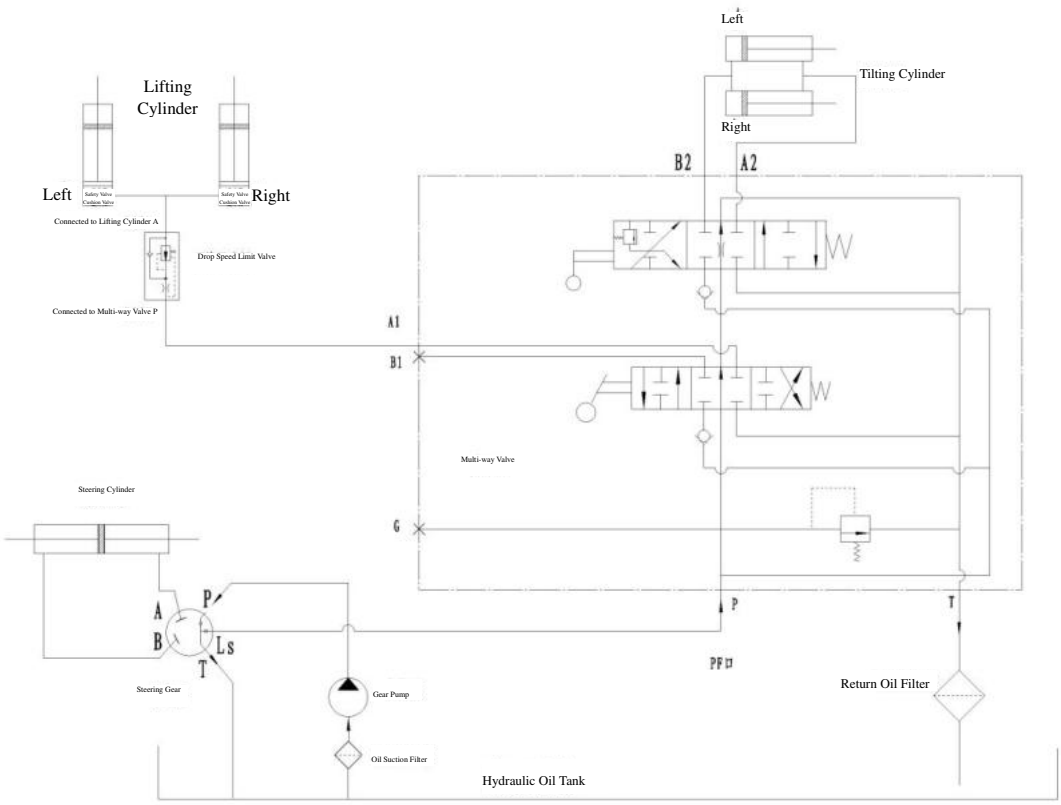

Fig 10-1 Hydraulic Schematic Drawing

10.2 Oil Pump

Oil pump is gear pump. Gear pump is driven by Pump Motor. The structure of gear pump is indicated as in Fig 10-2.

10.2.1 Maintenance of Oil Pump

(1) Disassembly

Before disassembly, it shall be thoroughly cleaned. The demounted parts shall be put on clean paper or cloth. Take care not to contaminate or injure the parts.

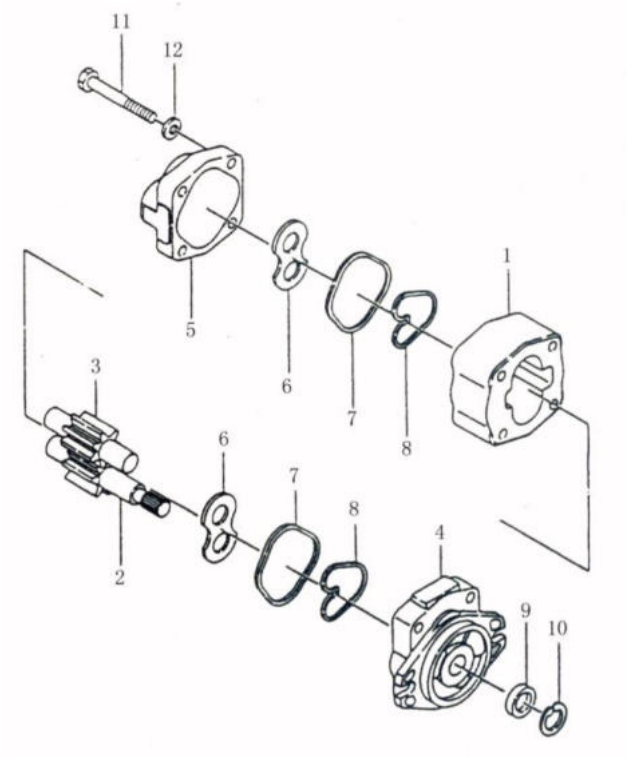

1. Pump Body	5. Rear End Cover	9. Oil Seal
2. Driving Gear	6. Lining Plate	10. Spring Retainer Ring
3. Driven Gear	7. Seal Ring	11. Bolt
4. Front End Cap	8. Retainer Ring	12. Washer

Fig 10-2

(a)Clamp the flange part of pump on the clamp bench.

(b)Dismount the Connecting Bolt 11, Pump Cover 5, and Pump Housing 1.

(c)Detach the Lining Plate 6, the Driving Gear 2, and the Driven Gear 3.

(d)Demount the Seal Ring 7 and the Retainer Ring 8 from the front and rear end caps.

Attention: Don’t demount the seal ring if it is not to be replaced.

(2) Examination

Examine the disassembled parts, and clean them using gasoline. (except rubber parts).

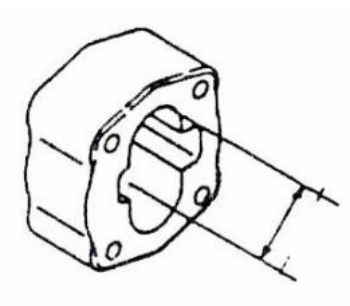

Fig 10-3

(a)Examination of Pump Body

The pump body shall be replaced, if the contact length of pump body internal cavity and the gear is larger than the circumference by 1/2.

(b) Examination of Lining Plate

Examine the contact face of lining plate, and the lining place shall be replaced if the surface is damaged or the thickness of lining plate is smaller than the specified value.

The specified value for thickness of lining plate: 4.94mm.

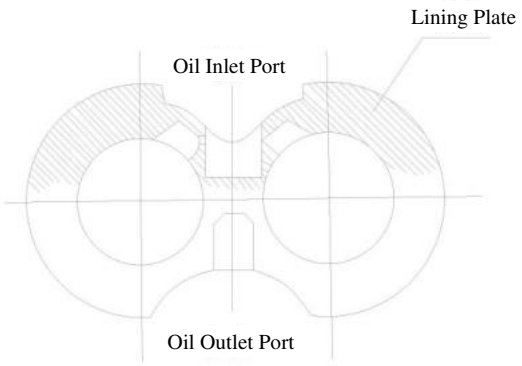

Fig 10-4

(c) Front and Rear Pump Caps

The inner surface lining shall be replaced, if its color change (brown color) exceeds a range of 150℃.

(d) Examine the driving and driven gears from front and rear. A pair shall be replaced in the case of excessive wear, and they shall be replaced in pairs if side D is smaller than the specified value.

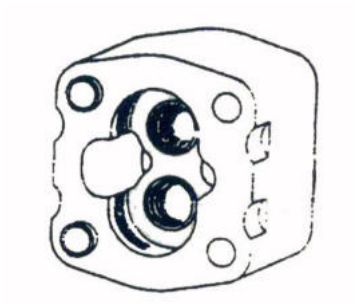

Fig 10-5

(e) Replace seal ring, lining seal part, retainer ring, and spring retainer ring, as per requirements.

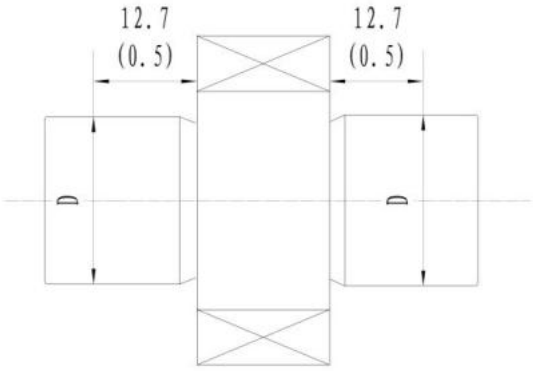

Fig 10-6

(3) Assembly

(a)Mount on a new seal ring and new retainer ring on the front end of the pump.

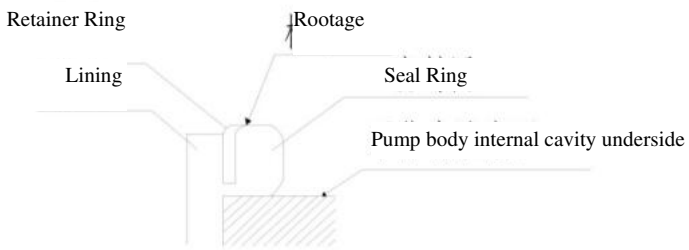

Fig 10-7

(b)Mount on the lining plate in the groove part of front end cover, and take care not to mistake the oil suction port and oil drain port.

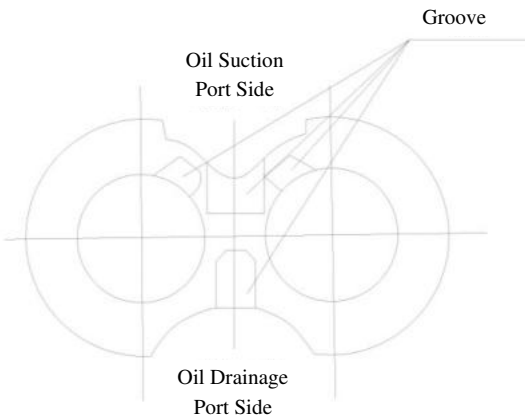

Fig 10-8

(c)Mount on the driving and driven gears on the front end cover.

(d)Mount on the lining plate on the side of gear for the groove to be aligned with gear point. Take care not to mistake the oil suction port side and the oil drain port side.

(e)Mount on a new seal ring and new retainer ring on the groove part of rear cap. Refer to the figure.

(f)Mount the rear cap on the pump body, and pay attention not to mistake the oil suction port and the oil drain port.

(g)Tighten the connecting bolts to the specified torque 9～10kg.m after everything has been properly assembled.

(4) Trial Run

Trial run is for oil pump to run in. Examine whether or not the pump moves normally, and it is best to test the oil pump on test bench, but it may also be tested on forklift truck in following steps:

(If oil pump is disassembled for maintenance due to severe worn-out or block-up because of hydraulic oil, the hydraulic oil and the filter shall be replaced, prior to trial run on forklift truck.)

(a)Mount the pump on the forklift truck, and mount on pressure gauge at the pressure test port of multi-way valve.

(b)Loosen the adjusting screw of overflow valve, for pump to run for about 10 minutes at 500～1000rpm, to ensure that the oil pressure is lower than 10 kg/cm².

(c)Speed up the pump rotation to 1500～2000rpm, and run for about 10 minutes.

(d)Maintain the pump speed at 1500～2000rpm, and increase the pressure by 20～30kg/cm² each time, run for 5 minutes, until it reaches 175kg/cm².

Pay attention to test the temperature of oil, the temperature of pump surface, and running sound, when oil pressure is increased, and reduce the load for oil temperature to drop if oil temperature or pump surface temperature have excessively risen, before test is continued.

(e)Keep the overflow pressure at 175kg/cm² after test, measure the flow rate. Oil rate is to be measured through lifting speed.

10.2.2 Fault Diagnosis

Failure	Cause	Repair Method
Oil Drainage Quantity Small	Oil level of oil tank low	Oil to be added to specified quantity
	Oil pipe or oil filter blocked	To be cleaned or replaced as per requirement
Pump Pressure Low	Lining plate damaged Bearing damaged Seal ring, lining seal part or retainer ring under poor condition	To be replaced
	Overflow valve misadjusted	Overflow valve to be adjusted to specified value using pressure gauge
	Air present in system	Oil pipe at oil suction side to be re-fastened Oil to be added Oil seal of oil pump to be replaced
Noise Present during Operation	Oil suction pipe damaged or oil filter blocked	Pipe to be examined or oil filter to be maintained
	Oil suction side loosened and air leak	loosened area to be fastened
	Oil viscosity too high	To be replaced with oil with viscosity adaptive to pump operating temperature
	Air bubble present in oil	Cause of air bubble to be found out and actions to be taken
Pump Oil Leak	Pump oil seal or seal ring damaged	To be replace
	Pump damaged	To be replaced

10.3 Multi-way Valve

Two-piece and four-body type is applied to multi-way valve, and the hydraulic oil from working oil pump is controlled through multi-way valve stem, to distribute the high-pressure oil to lifting cylinder or tilting cylinder. Safety valve and self-lock valve are available inside the multi-way valve. The safety valve is set on the oil inlet port of multi-way valve, able to control system pressure, while self-lock valve is set on the valve plate of tilting cylinder, mainly used for preventing severe aftereffect caused by misoperation of control rod under the condition when tilting cylinder has no pressure source. One-way valve is installed between the oil inlet port and the oil suction port of lifting valve as well as between the oil inlet port of lifting valve and the oil inlet port of tilting valve plate.

The shape of multi-way valve is indicated as in the figure.

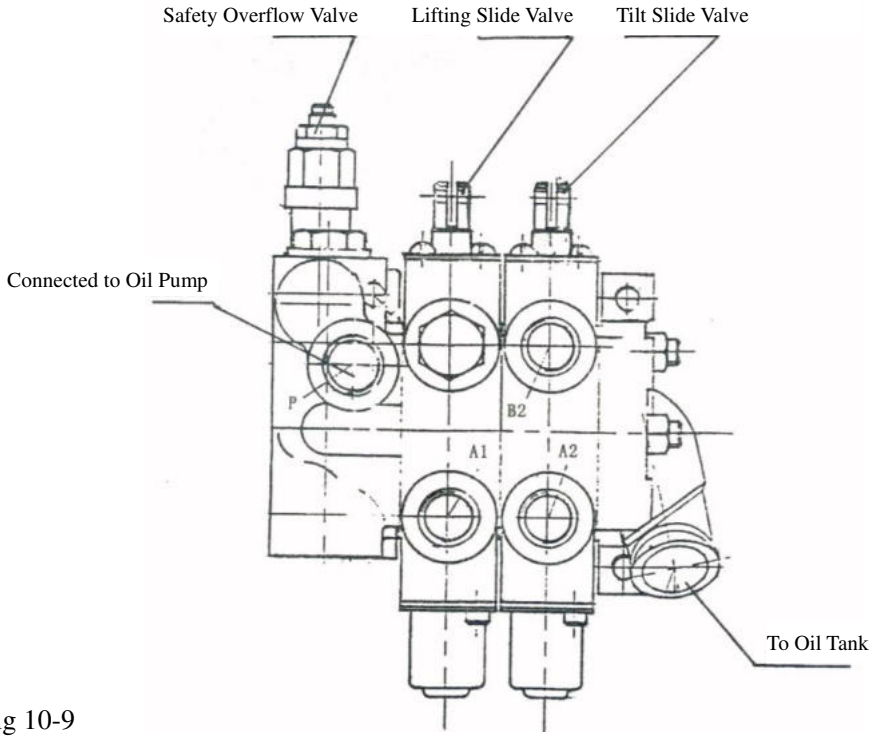

Fig 10-9

(1) Operation of Slide Valve (Taking tilting valve as example)

(a)Neutral Position (Fig 10-10)

At this point the high-pressure oil drained from oil pump returns to oil tank through neutral position.

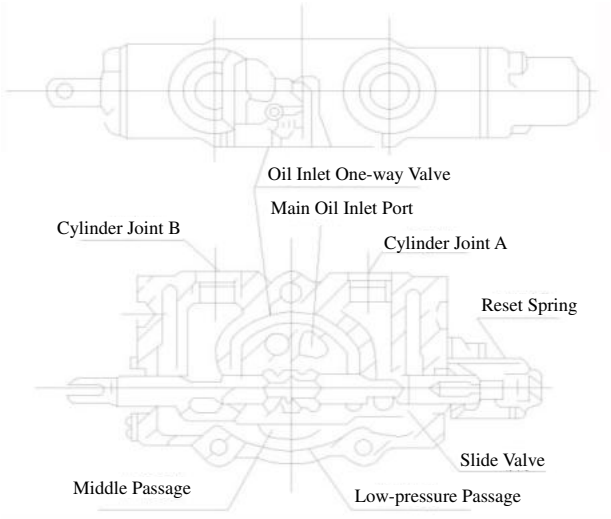

Fig 10-10

(b)Push-in Slide Valve (Fig 10-11)

At this point, the middle passage is closed, and the oil from the oil inlet port opens the one-way valve and flows to cylinder interface B, while the oil from cylinder interface A flows to the oil tank through low-pressure passage, able for slide valve to return to neutral position, depending on the return spring.

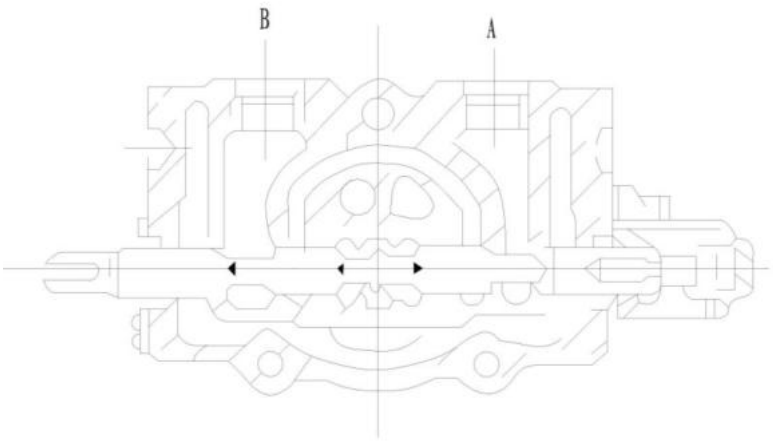

Fig 10-11

(c)Pull-out Slide Valve (Fig 10-12)

At this point the neutral position is closed, and the oil from the oil inlet port opens the one-way valve, and flows to cylinder interface A, while the oil from cylinder interface B flows to the oil tank through low-pressure passage, able for slide valve to return to the neutral position, depending on return spring.

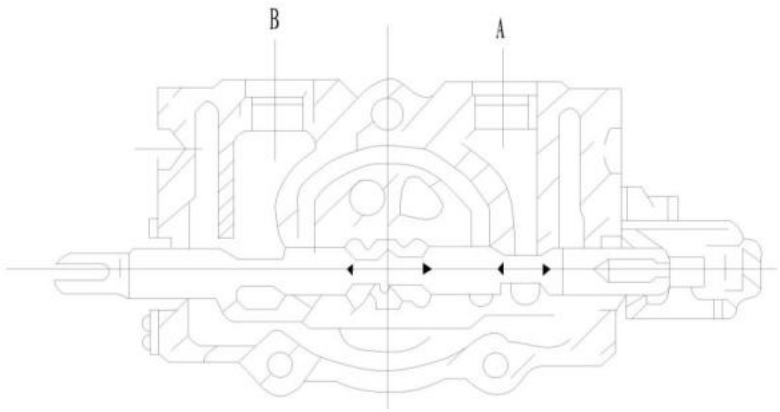

Fig 10-12

(2) Action of Safety Overflow Valve

Overflow valve is installed between the oil pump “HP” interface and low-pressure “LP” passage. Through function of lifting valve “C” oil on the different areas of “A” and “B”, in this way the one-way valve “K” and the overflow lifting valve “D” both drop on the valve seat, as indicated in Fig 10-13.

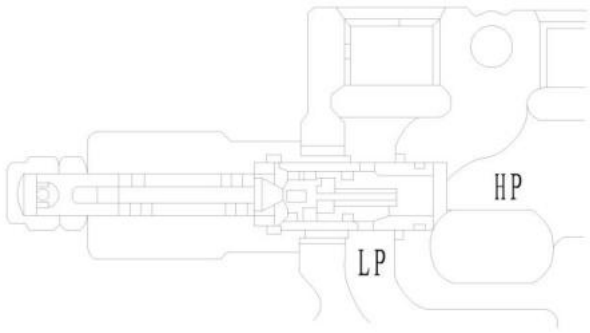

Fig 10-13

The pressure set in the oil pump “HP” passage acts on the spring of guide valve, and the one-way valve “E” will open. Oil passes around the valve and flows into the low-pressure “LP” side via through hole, as indicated in Fig 10-14.

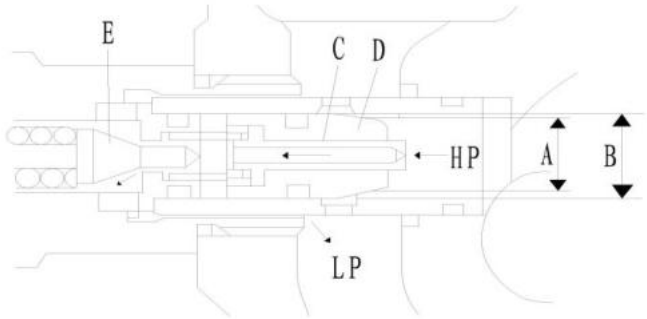

Fig 10-14

Once the guide valve “E” is opened, the pressure of the inner side of valve “C” will drop, and valve “E” and valve “C” both drop on the valve seat. The fluid flow in the back of flow valve “D” will be closed, for which the pressure of the inner-side part will drop, as indicated in Fig 10-15.

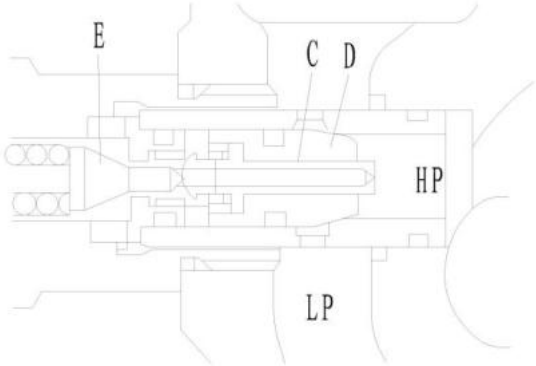

Fig 10-15

The pressures on the oil pump “HP” passage side and the inner side are imbalanced, and the valve “D” will open under the action of pressure difference, for oil to directly flow into the low-pressure “LP” circuit, as indicated in Fig 10-16.

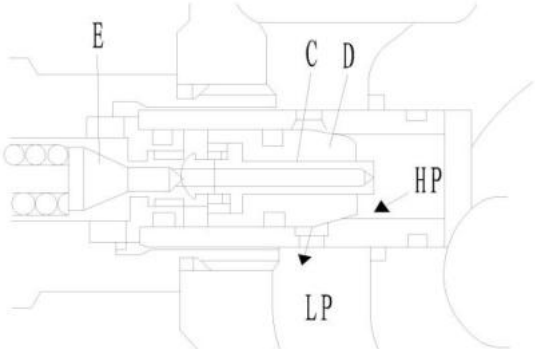

Fig 10-16

(3) Action of tilting Self Lock Valve

Tilting self lock valve is installed inside the valve plate of tilting cylinder, to prevent the sudden drop of mast when negative pressure is generated inside the cylinder, and to prevent danger generation at the time when tilting valve stem is misoperated. The mast will not tip forward even if the control rod is thrusted, at the time when motor of forklift truck has stopped work, by using such self lock valve.

The flow direction of oil is the same as indicated in Fig 10-12 when valve core is pulled out, and at this point the mast is in the tipping-back status. The status when valve core is pushed in is described below.

(a)When valve core is pushed in (pump working)

The oil from the main pump passes interface “B” to the tilting cylinder, the oil returning from cylinder passes oil port A and acts on the piston, and the oil returns to the oil tank through the LP oil circuit holes A and B on valve core.

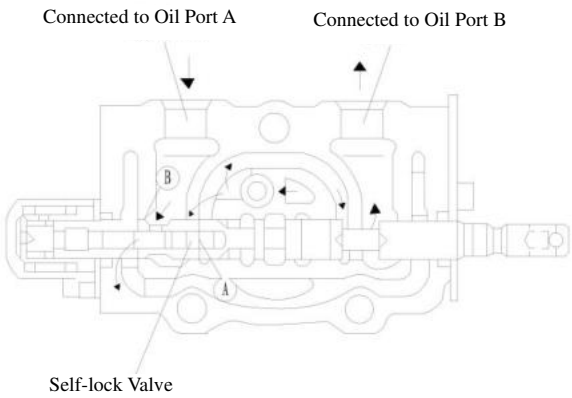

Fig 10-17

(b)When valve core is pushed in (pump not working)

Push in the valve core when oil pump is not working, no oil will enter into cylinder interface “B, and thus the pressure in the P part will not rise. On this account, piston will not move, the oil of cylinder interface “A” cannot return to oil tank, and the cylinder does not move.

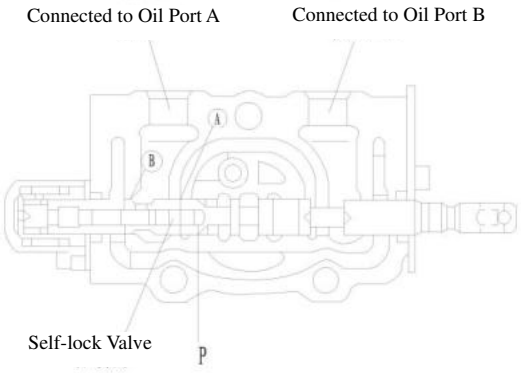

Fig 10-18

(4) Multi-way Valve Control

Multi-way valve is controlled by control rod, and all the control rods are installed on one piece of connecting shaft. The shaft is fixed on instrument panel through bracket, and the control rods control slide valves through connecting rod.

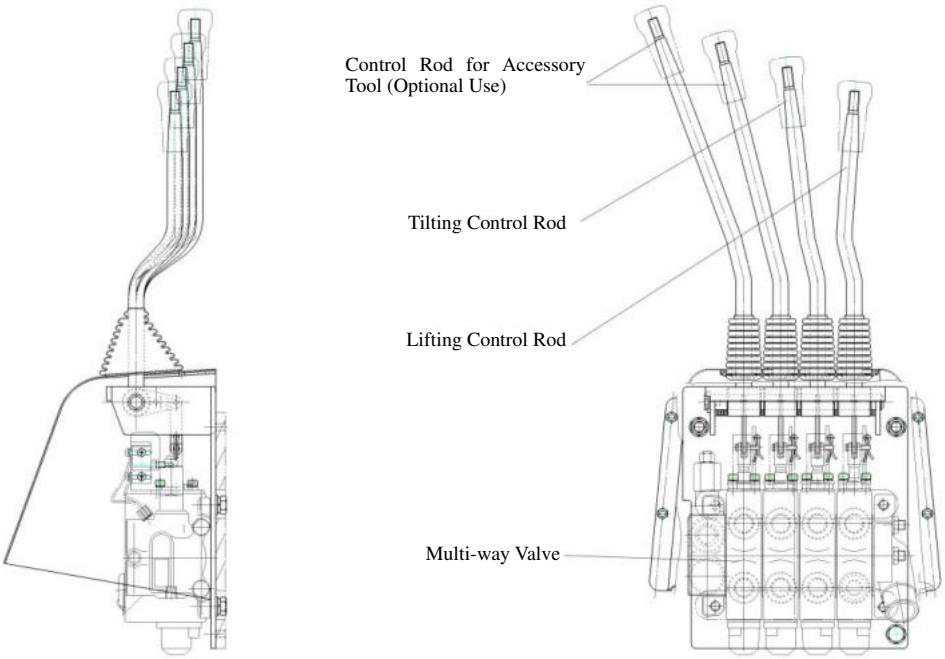

Fig 10-19 Multi-way Valve Control

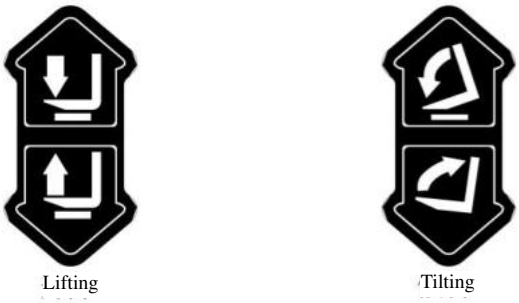

Fig 10-20

According to what's indicated in Fig 10-20, push forward and pull up backward the lifting handle, the mast will rise and drop, respectively. Push forward and pull backward the tilting handle, the mast will tip forward and backward, respectively.

(5) Adjustment of Multi-way Valve Pressure

	2.5T
Safety valve Pressure Control Value	20Mpa
Steering Gear Pressure Setting	6.3Mpa

Pressure Adjusting Method for Safety Valve (Fig 10-21)

The pressure of safety valve shall not be randomly adjusted, and please adjust the pressure in the following steps.

(a) Screw off the measurement hole screw plug for the inlet part of multi-way valve, mount on the oil pressure gauge that is able to measure 20MPa.

(b) Operate the tilting handle, and measure the pressure when stroke of cylinder has moved to the end.

(c) When oil pressure and specified value are different, loosen the lock nut of overflow valve, and adjust the left/right turning adjusting screw to the specified value.

(d) Tighten the nut after it has been properly adjusted.

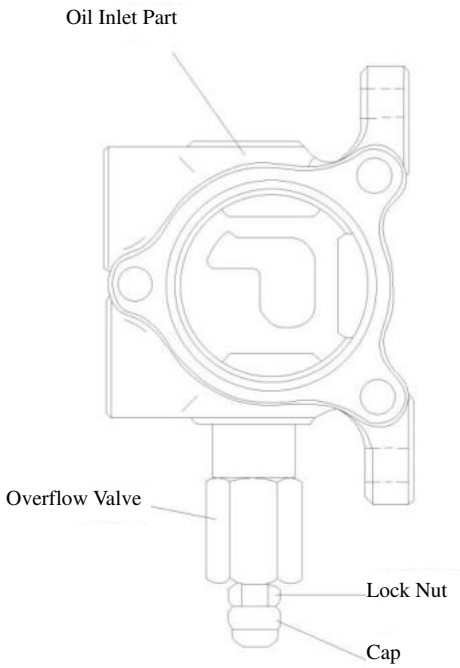

Fig 10-21

Warning

·Cargo must be placed steadily and firmly.

·Please don't adjust randomly the pressure once it is properly adjusted.

10.3.1 Fault Diagnosis

Failure	Cause	Repair Method
Pressure of Lifting Oil Circuit Fails to be Increased	Slice valve blocked and stagnant	To be cleaned after disassembly
	Oil hole blocked	To be cleaned after disassembly
Quake Slow Pressure Rise	Slide valve blocked and stagnant	To be cleaned after disassembly
	Air exhaust insufficient	Air to be fully exhausted
Pressure of Steering Oil	Slide valve blocked and stagnant	To be cleaned after disassembly

Circuit Larger than Specified Value	Oil hole blocked	To be cleaned after disassembly
Specified Oil Quantity Cannot Be Reached	Adjustment of overflow valve improper	To be adjusted
Noise Present	Adjustment of overflow valve improper	To be adjusted
	Slide Surface Worn-out	Overflow valve to be replaced
Oil Leak (External)	O-ring aged or damaged	O-ring to be replaced
Set Pressure Low	Spring broken	Spring to be replaced
	Valve seat surface damaged	To be adjusted or overflow valve to be replaced
Oil Leak (Internal)	Valve seat surface damaged	Valve seat surface to be amended
Set Pressure High	Valve blocked and stagnant	To be cleaned after disassembly

10.4 Full Hydraulic Steering Gear

Full hydraulic steering gear (10-22) is able to measure the size of angle according to the rotation of steering wheel and transmit the pressure from oil pump to steering cylinder through pipeline. When oil pump fails to supply oil, steering can be achieved manually.

This steering gear is an integrated full hydraulic steering gear typical of all combination valve functions, and it ahs included safety valve, overload valve, oil supply valve, inlet one-way valve, and manual steering one-way valve. **The pressure of safety valve has been adjusted before delivery from the factory, and user is not allowed to adjust the pressure of safety valve at discretion. It must be approved by the manufacturer of the mainframe if adjustment is required, and otherwise the user himself/herself shall undertake all the aftereffects.**

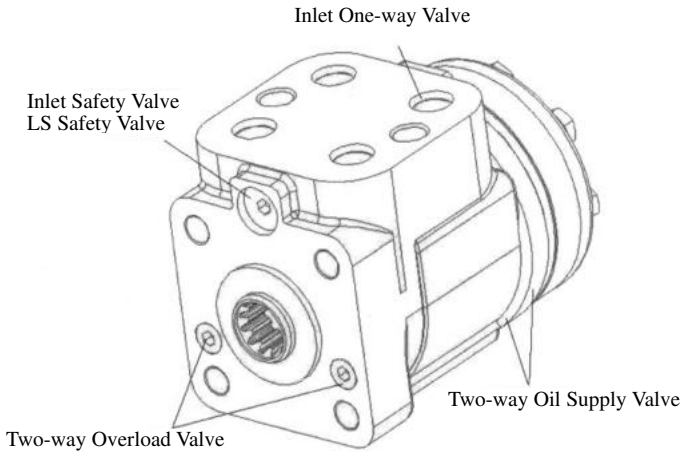

Fig 10-22

10.5 Speed Limiting Valve

The speed limiting valve plays the safety function for controlling the fork dropping speed and under the unexpected situations of HP crack, etc. Refer to Fig 10-23 for working status of speed limiting valve.

Return oil of lifting cylinder enters into the valve cavity G, and returns to multi-way valve through FEDCB and A.

When a large quantity of oil flows through the valve core hole C, the pressure difference generated in valve core enables the valve core to move rightward.

Thus the passage between the holes D and C turns narrow, the return oil quantity is reduced for it, and the dropping speed of fork turns slow.

If fork is to be lifted, the HP oil from multi-way valve enters into lifting cylinder through ABCDEF and G.

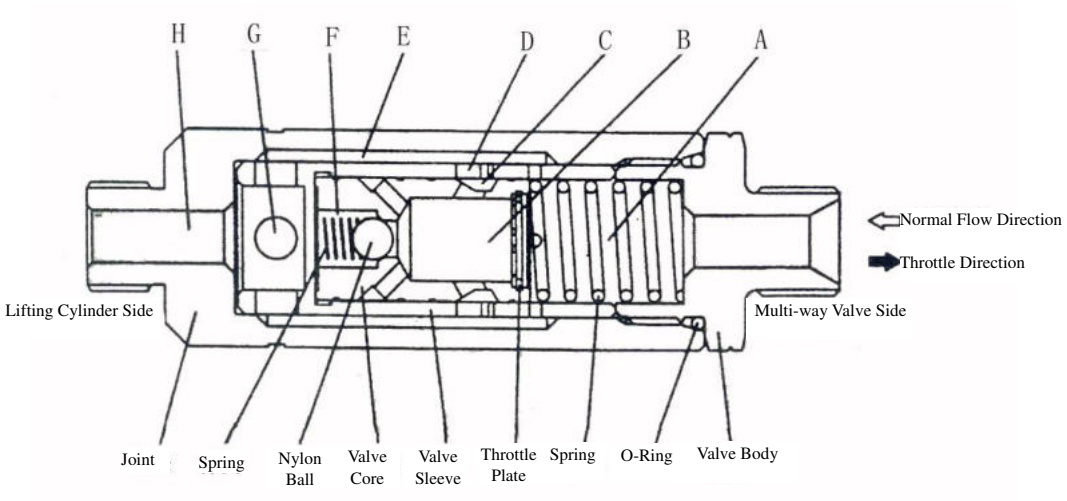

Fig 10-23

10.6 Hydraulic Pipeline

Refer to the following figure for hydraulic oil pipeline of Electric Rough-terrain forklift truck hydraulic system.

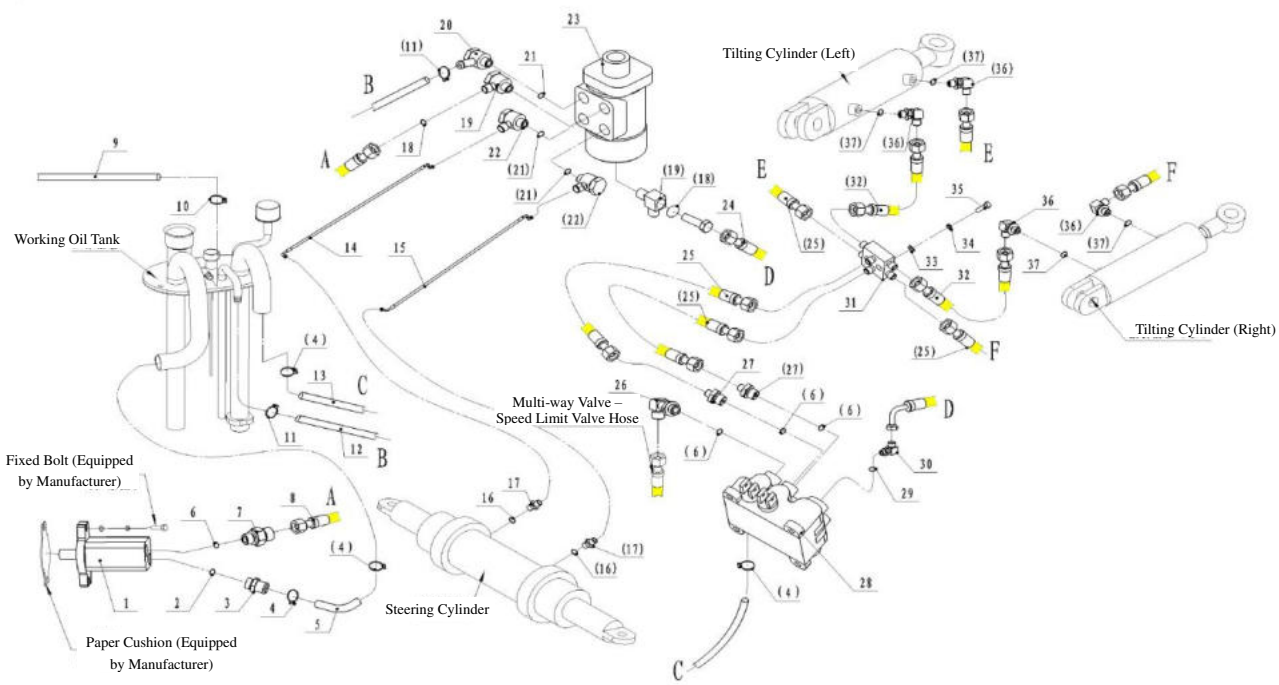

Fig 10-24 Hydraulic Pipeline

11. Working Devices

11.1 Overview

Working device is mainly composed of inside mast, outside mast, fork carriage, lifting cylinder, and tilting cylinder, etc.

11.2 Inside and Outside Mast (Fig 10-26)

The inside and outside masts are the welded parts. The bottom part of outside mast is installed on driving axle using support.

The middle part of outside mast is connected together with vehicle chassis through tilting cylinder, and able to tip forward and backward under the function of tilting cylinder.

The channel steels for both inside and outside mast are in C type, the main roller and side rollers are installed on the top of the outside mast, and the composition roller is mounted on the bottom of inside mast.

The maintenance and service of the composite rollers for the inside and outside mast are high-position service, and attention shall be paid to safety.

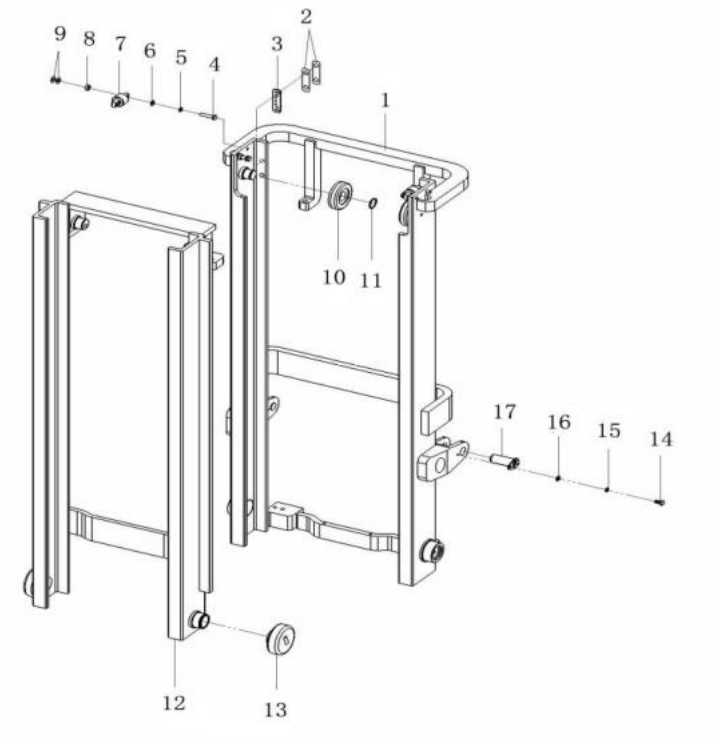

1. Outside Mast	7. Side Roller	13. Composite Roller
2. Adjusting Shim	8. Washer	14. Bolt
3. Slide Block	9. Adjusting Shim	15. Washer
4. Bolt	10. Single Roller	16. Washer
5. Washer 10	11. Retainer Ring 35	17. Pin Shaft
6. Washer 10	12. Inside Mast	

Fig 11-1

11.3 Fork Carriage

Fork carriage is composed of sliding carriage, backrest, and fork. The fork rolls inside the inside mast through composite roller, the composite roller is directly welded on the sliding carriage, and the rolling clearance is to be adjusted by traverse roller inside the composite roller.

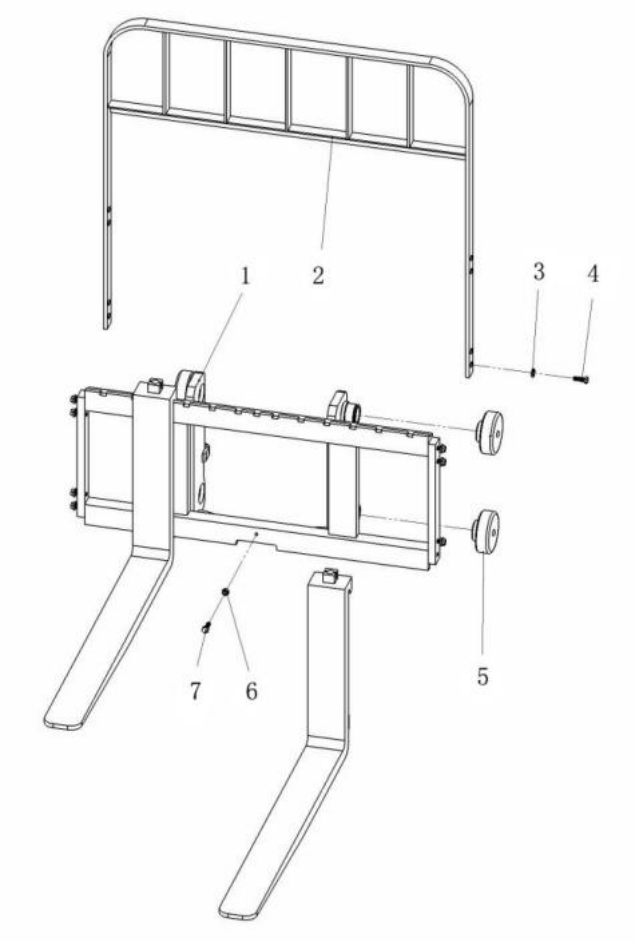

Fig 11-2

1. Sliding Carriage
2. Backrest
3. Washer
4. Bolt
5. Composite Roller
6. Nut
7. Bolt

11.3.1 Adjustment for Height of Fork Carriage

(1) Park the vehicle on a level ground and keep the mast to be vertical.

(2) Allow the underside of fork to contact the ground, adjust the adjusting nut of the joint on the top end of chain for there to be a distance A between the composite roller and the inside mast.

(3) Allow the fork to drop to the ground and tilt backward in place. Adjust the joint on the top part of chain, and adjust the nuts for the tensioning degrees of the two chains to be the same.

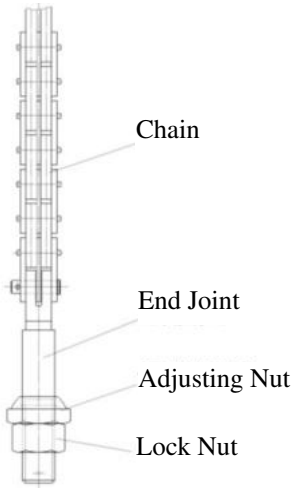

Fig 11-3

11.4 Roller Positions (Fig 10-30)

Rollers are divided into composite roller and side roller, installed on outside mast, inside mast, and fork carriage, respectively. The composite roller bears the front/rear, and side loads, while the side rollers mainly bear the side loads, thus for the inside mast and the fork carriage to move freely.

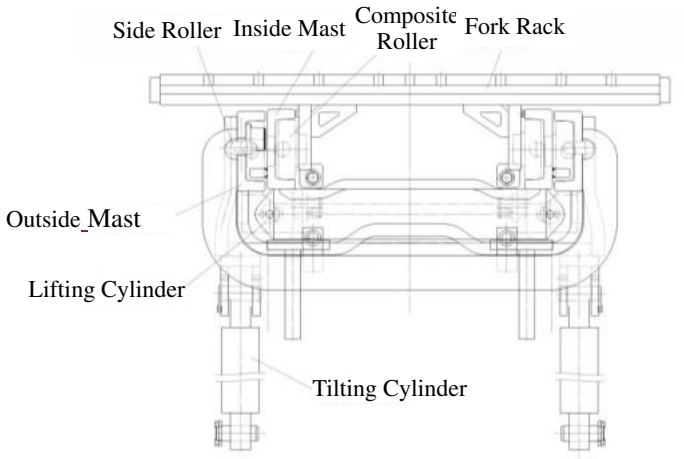

Fig 11-4

Note:

(a) Adjust the side clearance of composite roller to be 0.5mm.

(b) Add grease on the surface of composite roller and the contact fact of mast.

11.4.1 Replacement of Fork Carriage

(1) Park the truck on a level ground, with one pallet on the fork.

(2) Drop the fork and the pallet on the ground.

(3) Detach the joint on the top end of chain, and take off the chain from sprocket wheel.

(4) Lift inside mast (1 in Fig 10-31)

(5) Reverse the fork, after it is confirmed that the fork carriage has been disengaged from the outside mast. (2 in Fig 10-31).

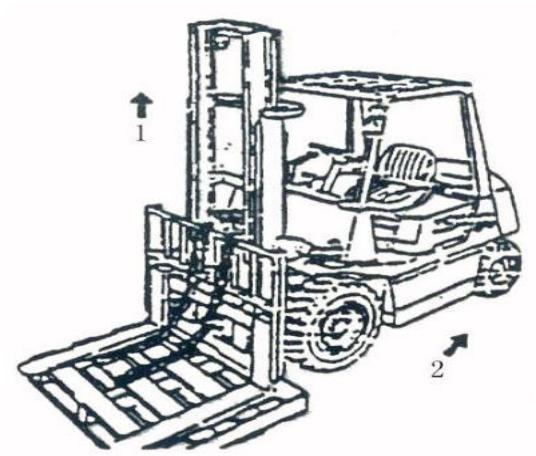

Fig 11-5

11.5 Lifting Cylinder

Lifting cylinder is in a single-function piston type, composed of cylinder body, piston rod, piston, and cylinder head, etc. For this series of forklift trucks, two piece of lifting cylinders are installed behind the outside mast, and its bottom part is fixed using pins and bolts on the support of the lifting cylinder on outside mast, while the top part of the cylinder (namely the top part of piston rod) is connected with the upper crossbeam of the outside mast.

The piston is fixed on the piston rod using spring steel wire, and oil seal and support ring are installed on the outer ring of piston.

One explosion relieve valve is mounted on the bottom part of the cylinder, and it can play the safety protective function if HP pipe suddenly cracks when mast is lifted up. Steel-backed bearing and oil seal are installed on the cylinder head, used to support piston rod and prevent dust entry.

Lifting cylinder is indicated as in Fig 10-32 and Fig 10-33.

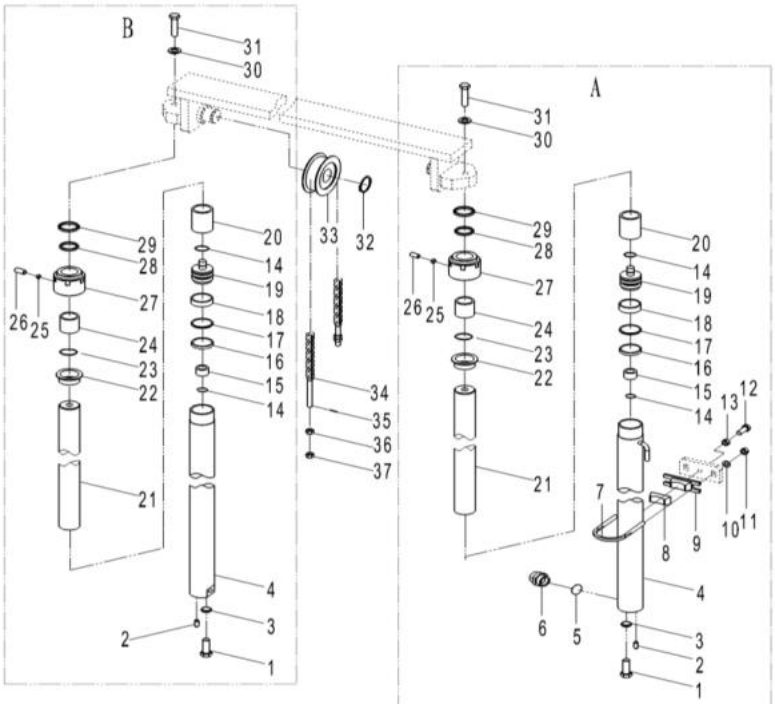

1. Bolt M12×1.25×25
2. Cylindrical Pin B10×25
3. Washer 12
4. Cylinder Body
5. O-Ring
6. Explosion Relieve Valve
7. Hoop
8. Rubber Sleeve
9. Hoop Seat
10. Washer 10
11. Nut M10×1.25
12. Bolt M12×1.25×30
13. Nut M12×1.25
14. Roundwire Snap Ring 24
15. Valve Sleeve
16. Hole Seal
17. Retainer Ring
18 Hole Support Ring
19. Piston
20. Spacer Sleeve
21. Piston Rod
22. Lining
23. O-Ring
24. Steel-backed Bearing
25. Nylon Cushion ϕ6×3
26. Screw M8x8
27. Cylinder Head
28. Shaft Seal
29. Dust Ring
30. Washer 14
31. Bolt M14×1.5×35
32. Retainer Ring 40
33. Sprocket Wheel
34. Chain
35. Cotter Pin B3.2×30
36. Spherical Nut M14×1.5
37. Nut M14×1.5

Fig 11-06 Lifting Cylinder

Working Status of Explosion Relieve Valve

One explosion relieve valve is available at the bottom part of lifting cylinder, and refer to Fig 10-33. It is used to prevent abrupt drop of cargo, when HP hose is suddenly cracked. The oil from the lifting cylinder passes the cutoff slide valve, and the oil holes around the slide valve allow the two cavities to generate pressure difference. At this point when differential pressure is smaller than the spring force, the slide valve will not act. In the case if HP hose is cracked, a very big differential pressure is formed, for the slide valve to move and block up the oil holes around it, while only a small quantity of oil is allowed to flow through the pores at the top part of slide valve, for fork to drop slowly.

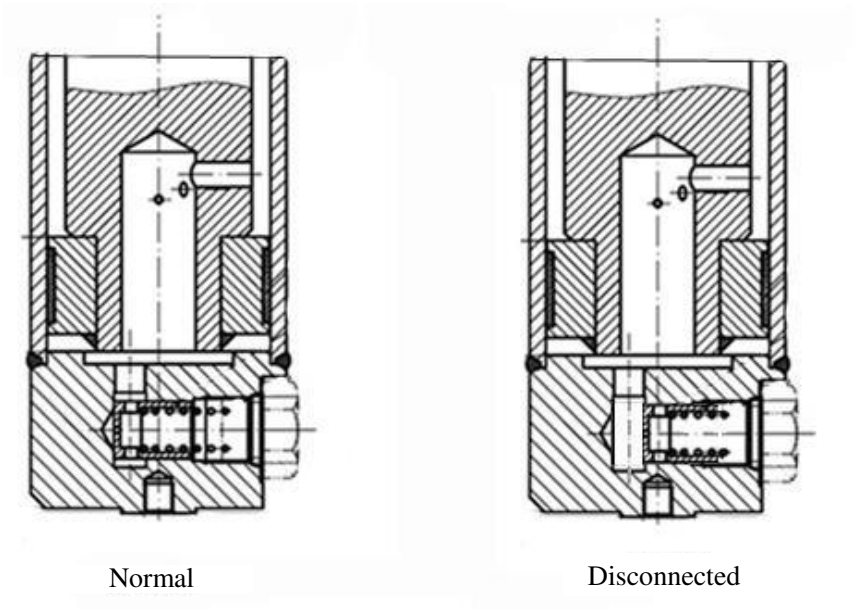

Fig 11-7

11.5.1 Adjustment of Lifting Cylinder

When lifting cylinder, inside mast or outside mast is disassembled and replaced, it is required to re-adjust the stroke of lifting cylinder. The adjusting method is given as follows:

(1) Mount the head part of piston into the upper crossbeam of inside mast without adding the adjusting shim.

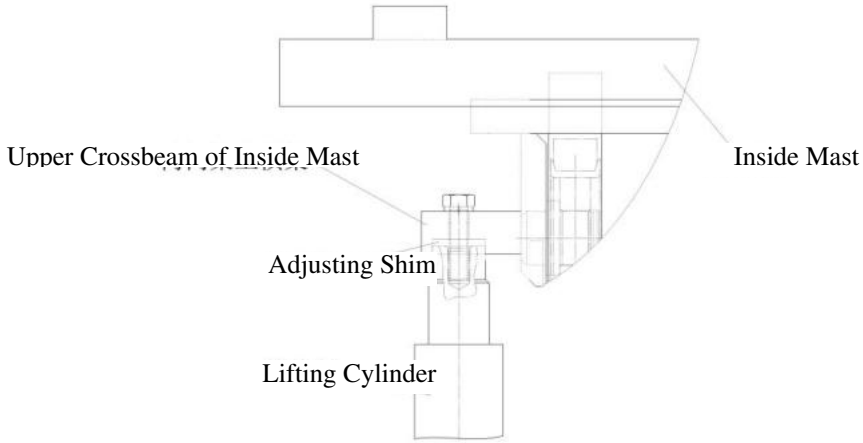

Fig 11-8

(2) Slowly lift the mast to the maximum stretching range of cylinder, and examine whether or not the two cylinders are synchronous.

(3) After movement is stopped, add adjusting shim between the head of piston and the upper crossbeam of mast. The thicknesses of adjusting shim are 0.2mm and 0.5mm.

(4) Adjust the tensioning degree of chain.

The adjustment of lifting cylinder is also a high-position service, and attention shall be paid to safety.

11.6 Tilting Cylinder

Tilting cylinder is in double function type, and its end part of piston rod is connected with mast through ear ring. The tilting cylinder bottom is connected with vehicle chassis using pins, and one piece of tilting cylinder is available on the two sides of forklift truck, respectively.

The tilting cylinder is mainly composed of piston, piston rod, cylinder body, cylinder bottom, guide sleeve, and seal part, etc. Piston and piston rod are in the welded structure. One support ring and two Yx seal rings are mounted at the outer edge of piston, while shaft sleeve is press fitted for and Yx seal ring, retainer ring, and dust ring are mounted in the inner hole of guide sleeve. This shaft sleeve supports the piston rod, the seal ring, the retainer ring, and the dust ring, able to prevent oil leakage and dust, screwed onto the cylinder body together with O-ring, indicated as in Fig 10-35, Fig 10-36, and Fig 10-37.

When tilting slide valve is pushed forward, HP oil enters from the cylinder bottom, thus to push the piston forward for the mast to tip forward. When the slide valve is pulled backward, HP oil enters from the front end of cylinder body, to push the piston backward, for the mast to tip backward.

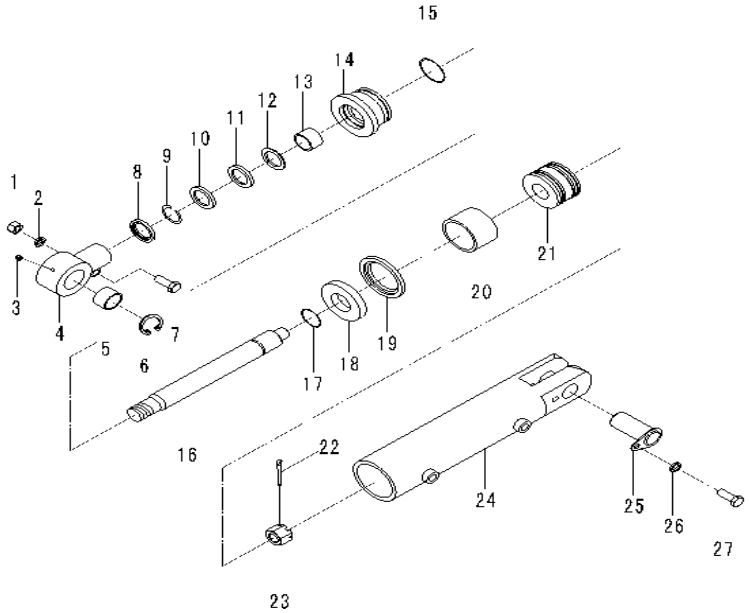

1. Nut M12×1.5	10. Block Shim	19. Glyd Ring
2. Washer 12	11. Retainer Ring	20. Hole Support Ring
3. Oil Cup M10×1	12. Oil Seal	21. Piston
4. Ear Ring	13. Steel-backed Bearing	22. Cotter Pin
5. Knuckle Bearing GE30ES	14. Guide Sleeve	23. Slotted Nut M20×2 Thickness 20
6. Hole Spring Block D47	15. O-Ring	24. Cylinder Body
7. Bolt M12×1.5×40	16. Piston Rod	25. Pin Shaft
8. Dust Ring d30×38×5/6.5	17. O-Ring	26. Washer 10
9. Hole Spring Block D42	18. Spacer Sleeve I	27. Bolt M10×20

Fig 11-9 Tilting Cylinder

11.7 Installation of Mast (as indicated in Fig 11-10)

(1) Set the part 1 the tilting cylinder liner on the part of vehicle chassis tilting cylinder support.

(2) Pass the part 6 the tilting cylinder pin shaft (in the place of vehicle chassis) through the tilting cylinder and its support installation holes.

(3) Tighten the part 7 the tilting cylinder pin shaft fasteners (bolt and spring washer).

(4) Hoist the mast using hoisting device, and place the support shaft at the position 5 of mast on the vehicle chassis support, cover on the part 9, and tighten the fasteners parts 8 (one group for left and right, respectively).

(5) Set the part 1 the tilting cylinder liner into 3 the mast tilting cylinder support.

(6) Pass the part 2 the tilting cylinder pin shaft (in the place of mast) through the tilting cylinder and its support installation holes, and tighten the fastener 3 (bolt, spring washer, and flat washer).

(7) Connect the part 13 the multi-way valve – speed limiting valve hose.

(8) Set the part 12 the return oil pipe on the tee of part 10 the mast, and fix the return oil pipe fast using part 11 the return oil pipe collar clamp, and the assembly of themast is now completed.

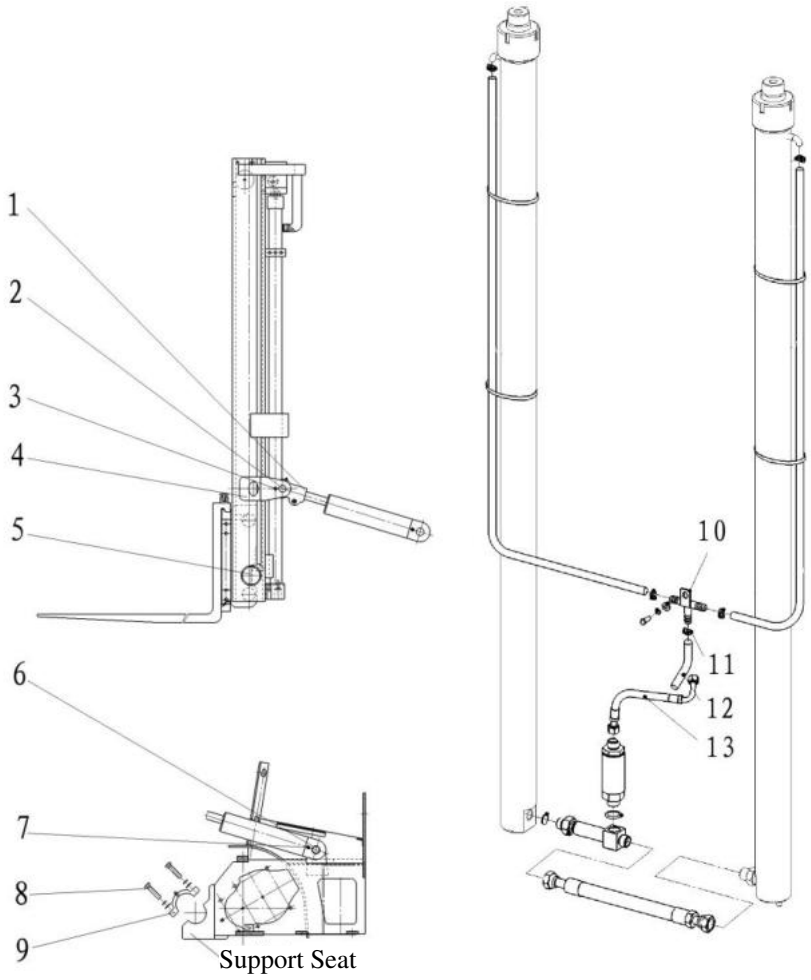

Attention: During installation of mast, safe hoisting of mast shall be ensured, and the installers must be relevantly trained.

1. Tilting Cylinder 2. Pin Shaft of Tilting Cylinder (In the Place of Mast) 3. Fastener
4. Mast Tilting Cylinder Support 5. Mast Support Shaft 6. Tilting Cylinder Pin Shaft (In the Place of mast)
7. Fastener 8. Fastener 9. Support Cover
10. Return Oil Tee Joint 11. Collar Clamp φ22 12. Return Oil Hose
13. Multi-way Valve – Speed Limit Valve Hose

Fig 11-10

11.8 Disassembly of Mast (as indicated in Fig 11-10)

(1) Dismount the part 13 the multi-way valve – speed limiting hose.

(2) Detach the part 11 the return oil pipe collar clamp.

(3) Demount the part 12 the return oil pipe.

(4) Remove the fasteners (bolt, spring washer, and flat washer) on the part 3 the tilting cylinder pin shaft (in the place of mast), and then detach the part 2 the tilting cylinder pin shaft (in the place of mast).

(5) Loosen and remove the part 9 the support cover fasteners 8 (bolt, spring washer, and flat washer) and at the same time demount the part 9 the support covers (one for left and right, respectively).

(6) Hoist out the mast and complete the disassembly of mast.

Attention: Safe hoisting of mast shall be ensured, during disassembly and assembly of mast, and the installers must be trained relevantly.

III. List of Wearing Parts

1. Some Wearing Parts

S/N	Name	QTY	Installed Position
1	Driving Wheel	2	Driving Axle
2	Steering Wheel	2	Steering Axle
3	Piston	1	Lifting Cylinder (Standard)
4	Piston	1	Tilting Cylinder
5	Instrument Left Cover Plate	1	Instrument Rack
6	Instrument Right Cover Plate	1	Instrument Rack
7	Various Hoses		Hydraulic System/ Mast Piping System
8	Chain	2	Mast

2. Oil Seal

S/N	Standard	Model/Specification	Qty.	Installation position
1	NOK	Shaft seal 40×50×6	2	lifting cylinder (standard)
2	LBH	Dust ring 40×48×5/6.5	2	lifting cylinder (standard)
3	NOK	Hole seal 50×40×3	2	lifting cylinder (standard)
4	LBH	Dust ring 32×52×8/11	1	tilting cylinder
5	NOK	Shaft seal 32×48×10	1	tilting cylinder
6	NOK	Hole seal D70×60×6	2	tilting cylinder

3. O-Ring

S/N	Standard	Specification	Qty.	Installation position
1	GB1235-76	22×2.4	1	lifting cylinder (standard)
2	GB1235-76	60×3.1	2	lifting cylinder (standard)
3	GB1235-76	70×5.7	1	2-2.5T tilting cylinder
4	GB1235-76	38×3.5	1	2.5T tilting cylinder
5	GB1235-76	18×2.4	2	Hydraulic system
6	GB1235-76	35×3.5	1	Hydraulic system
7	GB1235-76	22×2.4	13	Hydraulic system

4. Combination Seal Ring

S/N	Standard	Spec	QTY	Installed Position
1	JB/T 982-1977	18	6	Hydraulic System
2	JB/T 982-1977	20	4	Hydraulic System

5. Some Electric Appliance Components

S/N	Name	Model/Spec	QTY	Remarks
1	Fuse Box	BX2081	1	
2	Microswitch	TM1308	1	Hand Brake
3	Microswitch	Z-15GW22-B	1	Multi-way Valve