NOBLELIFT

FE4P25-32C-SMS-001

## ⚠ WARNING

**Do not use the forklift before reading and understanding the operating instructions as well as the waring decals on the truck.**
**Keep for future reference.**

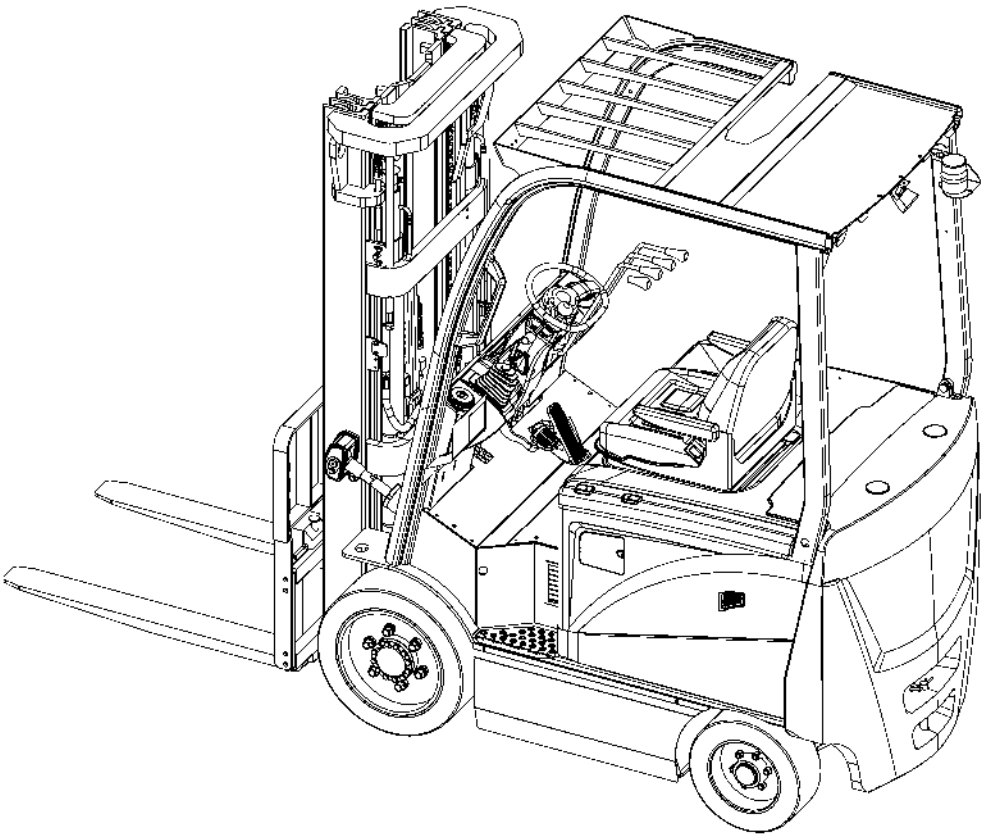

# Operation Manual

## FE4P25-32C series

## Electric Forklift Truck

**NOBLELIFT INTELLIGENT EQUIPMENT CO., LTD.**

# Catalogue


Introduction ..... 3
Chapter one Attentions when using the forklift truck ..... 5
1 .Transportation for forklift ..... 5
2. Deposit ..... 5
3. Preparation before use ..... 5
4. Operation of truck ..... 5
5.The Use of Lithium Battery ..... 6
6.The Use of Lead-acid Battery ..... 7
Chapter two The main performance parameters of forklift truck ..... 8
Ⅰ.The truck's outline dimension and performance parameters ..... 8
1. The truck's outline dimension ..... 8
2.Technical data ..... 9
Ⅱ The structure, principle and adjustment of the main parts of forklift ..... 11
1.Transmission system ..... 11
2. Brake System ..... 12
3. Steering system ..... 18
4. Electric system ..... 19
5. Traction power battery ..... 28
6. Hydraulic system ..... 31
7. Lifting system ..... 34
8. Removal and installation ..... 37
Chapter Three Operation, use and safety for forklift ..... 39
Ⅰ.Driving and operation ..... 39
1. Usage of new vehicle ..... 39
2. Connection between load and stability ..... 39
3. Load center and load curve ..... 39
4. Forklift stability ..... 39
5. Transporting and loading for forklift ..... 40
6. Preparation before driving ..... 40
7. Steer ..... 40
8. Parking and temporary parking ..... 41
9. Usage of battery ..... 42
10． Stacking ..... 43
11． Unstacking ..... 44
12 Deposit ..... 44
Ⅱ.Using instruction of operating devices ..... 46
1. Components, schematic diagram for operating devices（see following figure） ..... 46
2. Instrument unit ..... 47
3. Switches ..... 47
4. Control ..... 48
5. Truck body ..... 50
Ⅲ. Safety issues ..... 52
1. Operation place and working environment ..... 52
2. Safety rules ..... 52
3. Move the truck ..... 62
4. How to avoid overturning, how to protect yourself ..... 63
5. Safety problem in Maintenance ..... 64
6. Safety problem in battery usage ..... 66
7. labeling ..... 68
Chapter four Truck's regular check and maintenance ..... 69
Ⅰ. The check before operation ..... 69

1. Checking point and checking content ..... 69
2. Checking procedure ..... 70
Ⅱ.Check after operation ..... 73
Ⅲ.Truck cleaning ..... 73
1. Truck surface cleaning . ..... 73
2. Chains cleaning ..... 73
3. Electric system cleaning ..... 73
4. After cleaning ..... 73
Ⅳ. Regular maintenance ..... 74
1. Regular maintenance schedule ..... 74
2. Regular replacement of key safety parts ..... 79
Ⅴ.Area lubricated and lubricant recommended ..... 80
1. Area lubricated ..... 80
2. Lubricant recommended ..... 80

# Introduction

This manual briefly describes the technical parameters of the counterbalanced accumulator forklift made by our company, and the structure of its main components, working principle and requirements on operation and maintenance. Please read this manual carefully before operation, so as to achieve proper driving and maintenance, and to ensure safe and effective material handling. Meanwhile, this manual aims to guide operators to use the forklift in an appropriate way and to maximize its performance! We hope that operators and equipment managers could read it carefully before use! Please strictly observe the provisions and cautions stipulated in this manual and operate the forklift with caution and care, so that the forklift can be maintained in its best status and optimal performance can be ensured. When you lease or transfer your forklift, always keep this manual with it.

For highlighting purpose, the following icons are used in this manual:

1. ⃠ ----Refers to a potential danger; if not avoided, it may cause serious human injury, vehicle damage or fire.

2. ⚠ ----Refers to a potential danger; if not avoided，it may cause minor human injury, or local damage to the vehicle.。

3. ☞ ----Refers to general cautions and instructions during use.

⚠Most parts of the product are made from recyclable steel. The recycling and disposal of cast-offs resulted during use, maintenance, cleaning and disassembling of the product has to comply with local regulations without pollution to the environment. The recycling and disposal of the cast-offs should only be operated by specialised personnel in the designated area. The cast-offs, such as hydraulic oil, batteries and electronic units, if improperly disposed, may be hazardous to the environment and human health.

4. Requirements for the use environment of the truck

1)This product is strictly prohibited for use in a potentially explosive environment

2)Ambient working conditions

Average ambient temperature under continuous operating conditions: 25 °C;

Maximum ambient temperature in a short period (not greater than 1 hour): 40 °C;

Minimum ambient temperature when using a forklift under normal indoor conditions: 5 °C;

And the humidity should no more than 90%the wind speed is not more than 5m/s.

The normal use of the product's environmental requirements as follows: no more than 2000 meters above sea level

If you need to use in the freezer for a long time, Or in special environment, it is needed to install special attachments. Please contact our technical staff. Product recall service is also available when serial faulties occur.

5.Vehicle safety monitoring device

The vehicle can be equipped with a driver authority information collector, through fingerprint, iris, facial features and other biological information or magnetic card and personal identity unique binding media price, verify the driver's operation authority, when the collector is invalid, removed or the driver information is incorrect, the vehicle cannot start.

Due to continuous product improvement, Noblelift reserves the right to make changes in product designs and specifications without prior notice. For the latest product parameters, please feel free to contact us. All parameters provided herein are as of the publication date of the Instruction Manual.

# Chapter one Attentions when using the forklift truck

The operator mast always keeps in mind the principle of safety first. Conscientiously and cautiously read the maintenance manual. Undergo safe operate and canonical operate strictly following the demand in this manual

**1 .Transportation for forklift**

Pay attention to the following particulars when using container or automobile to convey forklift truck

(1) Enable parking brake

(2) Fasten mast and counterweight with steel wire in both two sides; Chock with wedge the front and rear wheels at proper site

(3) Hoist Lift the forklift according to indication on lifting plate

**2. Deposit**

(1) Lower the mast to the lowest position

(2) Switch off power; Push all the operating rod to vacancy; Pull out power plug

(3) Stretch hand brake rod

(4) Chock with wedge front and rear wheels

(5) When truck is in long-term non-use. Wheels should be overhead. And battery should be boost charged once a month

**3. Preparation before use**

(1) Check up all the meters

(2) Check up tyre pressure

(3) Check up the state of each handle and pedal

(4) Check up if the voltage of battery is in operating range; and whether the specific density of electrolyte and the altitude of liquid surface are in order

(5) Check up if the contact of each connector and plug of electrical system is ok

(6) Check up if the hydraulic liquid, electrolyte or brake fluid is leaking

(7) Check up the condition of each main fastener

(8) Check up if the illuminators, signal lamps are in order

(9) Loosen parking brake

(10) Try to lift and lower the mast, tilt forward and backward the mast, turn and brake the truck

(11) Be sure that the polluting level of hydraulic oil is less than 12grade

**4. Operation of truck**

(1) Only can the person operate the truck who has been trained and got driver’s license

(2) Operator should wear safe protective shoes, cap, costume in his operation

(3) Pay attention to the performance and working conditions of mechanics, hydraulic, electrical and MOSFET governor when operating

(4) Switch on the power, turn on the key, select the position of direction switch, roll the steering wheel to see if the truck is in order, step down the governor pedal slowly, keeping a proper starting acceleration

(5) Check the voltage meter when the truck is in working, if the value stated in the meter is less than 41V（72V）, stop working immediately, charge the battery or change another fully charged battery

(6) When conveying, the load should not exceed the rated capacity. The separation and position of forks should be appropriate, insert the forks absolutely downside the load, make the

load uniformly distributed on the forks; to prevent load from deviation

(7) When the distance between the load' gravity center and yoke is equal or less than 500mm.The maximum load capacity should be the rated capacity, and when the distance between the load' gravity center and yoke is more than 500mm; the maximum load capacity should be less than the rated capacity

(8) When forks are bearing load, tilt backwards mast mostly, the yoke should always contact with load; lift forks up to 200mm high from ground before driving

(9) No standing under forks, no standing on forks when lifting

(10) The starting speed should not be too fast when starting to lift and lower the load

(11) No operation of truck and it' s additions without sitting on the driver's seat

(12) Push handle immediately to middle position when the mast has tilted forward or backward to the extreme position

(13) No driving or turning when the mast is lifting

(14) When travelling, pay attention to passers by, obstacles, irregular road and the clearance of upper side of forklift

(15) Be careful of travelling on slope, when the angle of slope is more than10%, travel forward upslope and travel backward downslope. no turning on slope, no loading or unloading when travelling downslope

（16）Reduce speed when turning on the damp or slick road, take special care and drive slowly when travelling on dock or on temporary board

(17) Operating high lift range truck of which the lifting height is more than 3m, pay attention to the dropping of the load, and take measures to prevent it when necessary

(18) Don't convey unfastened or loosely stacked load, be careful when conveying large-size load

(19) When travelling with load, avoid emergency brake

(20) When leaving the truck, lower the forks to ground; push lever to free position, switch off power, when parking on the slope, pull tight the brake apparatus and plug the wheels with wedge if the parking time is long

(21) The protection valves on multiway valve and on steering device are already regulated, so the users shouldn't regulate randomly when using to prevent that the excessively high oil pressure leads to the damage of the whole hydraulic system and the burnout of the electric motor

(22) Charge the tyres according to the pressure value stated in "tyre pressure" indication

(23) Treat the operation of non-load truck with additional apparatus as the operation load truck

**5.The Use of Lithium Battery**

Use the battery pack in strict accordance with the conditions specified in the battery pack instruction manual. Otherwise, the battery pack may not be covered by the warranty.

(1) Do not operate electric vehicles equipped with lithium batteries at temperatures above 55 °C or below -25 °C
(2) Under low temperature conditions below 0°C, please charge the vehicle immediately after use, please charge the vehicle immediately after use
(3) Do not flush the battery container directly to prevent water from entering the battery container
(4) Do not touch, remove, or disassemble the battery pack, high-voltage cables, or other components with high-voltage warning labels except Professional
(5) If the vehicle is involved in a strong collision, stop the vehicle in a safe area and check the battery pack area for damage
(6) When the vehicle or battery pack is on fire, leave the vehicle quickly to a safe distance and use a dry powder fire extinguisher to deal with the fire. Using water to extinguish the fire or putting out the fire with an incorrect fire extinguisher may lead to electric shock. According to the characteristics of the battery, the battery capacity attenuation range is 0% to 25% within the three-pack period

(7) The charging temperature ranges from 0°C to 40°C. Under low temperature conditions below 0°C, charging at high rate may cause damage to the battery. Under low temperature conditions below 0°C, charge the vehicle immediately after use
(8) Discharge temperature range: -20 ~ 50°C, The discharge capacity at (-20 ~ 0°C) may be lower than that at normal temperature. The battery can be used at 40 ~ 50 °C. However, if the battery temperature is too high, especially if the battery is in a high temperature environment for a long time, the aging of the materials inside the battery will be accelerated and the service life of the battery will be shortened
(9) If the ambient temperature exceeds the temperature range, the battery performance may be adversely affected or damaged, and the service life of the battery may be shortened, so please avoid

**6.The Use of Lead-acid Battery**

(1) When the battery pack is charged for the first time and replenishment, it must strictly comply with the provisions of the battery manual
(2) When the voltage of the battery pack is reduced to 41V or the voltage of any single battery is lower than l.7V, or the instrument gives an alarm, the forklift truck should stop working immediately and continue to use after charging or replacing the battery pack
(3) When charging, check the specific gravity of the electrolyte, liquid level height and temperature at any time
(4) After the forklift is used, the battery must be charged as soon as possible, and the placement time shall not exceed 24 hours. When charging, it is necessary to prevent insufficient and overcharging, so as not to damage the battery
(5) In normal use, forklifts should be charged once a month in a balanced manner to adjust the proportion of each battery group.

Please refer to relevant sections of this manual for detailed charging method and operation and maintenance

# Chapter two The main performance parameters of forklift truck

## Ⅰ.The truck's outline dimension and performance parameters.

### 1. The truck's outline dimension

see figure 1-1

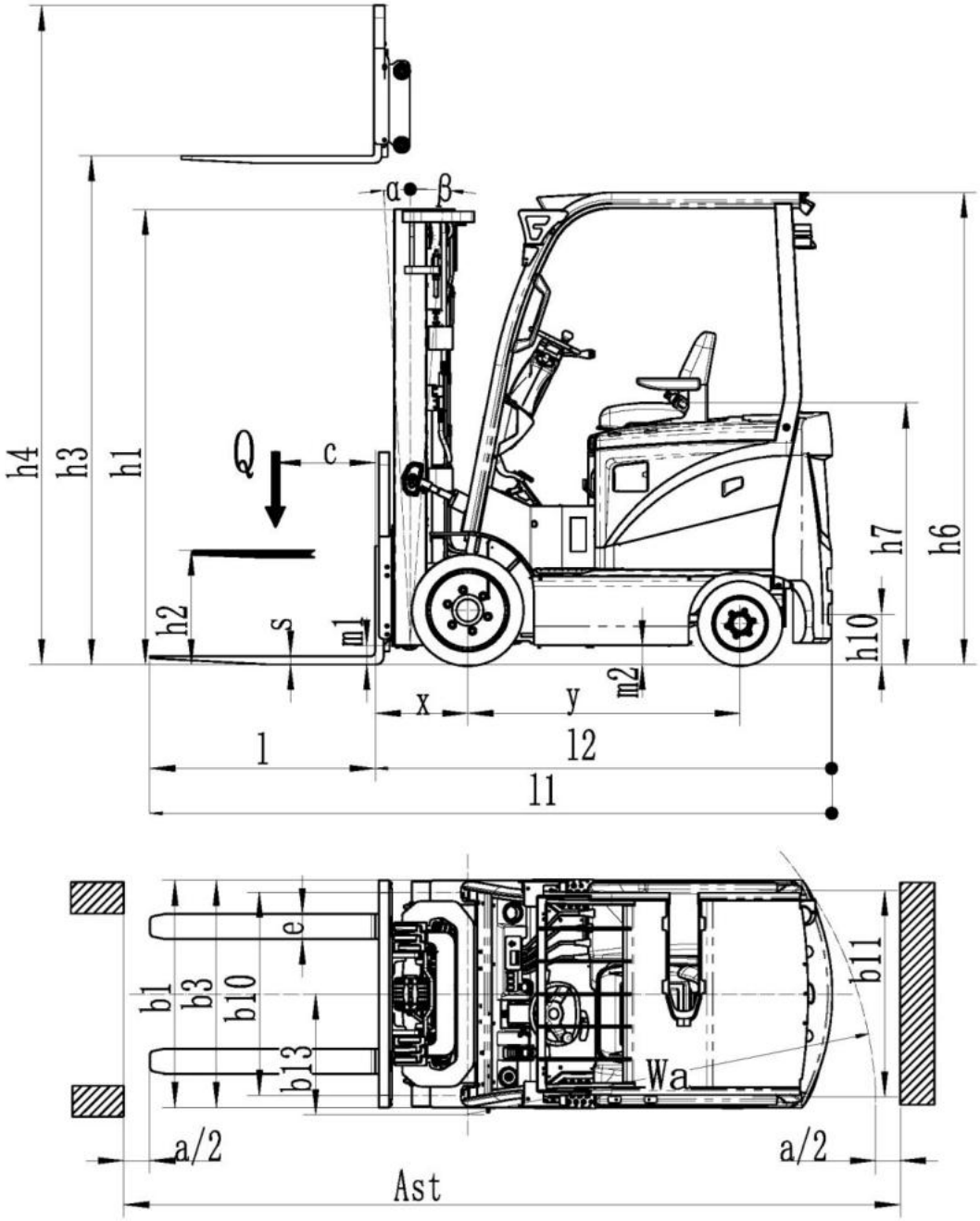


Figure 1-1 outline

# 2.Technical data

## 2.1FE4P25C Technical data（list 1-1）

| | | | |
|---|---|---|---|
| Manufacturer's type designation | | | FE4P25C |
| Drive:electric | | | electric |
| Type of operation | | | seated |
| Load capacity/rated load | Q | lb(kg) | 5000(2270) |
| Load centre distance | C | in(mm) | 24(600) |
| Load distance,centre of drive axle to fork | x | in(mm) | 17.3(440) |
| wheelbase | y | in(mm) | 51(1295) |
| Service weight incl. battery(see line 6.5) | kg | lb(kg) | 9405(4350) |
| Type:solid rubber,superelastic,pneumatic, | | | solid rubber |
| Tyres size,front | | | 21×7-15 |
| Tyres size,rear | | | 16x6-10.5 |
| Wheels,number front/rear(×=driven wheels) | | | 2×/2 |
| Track width,front | b10 | in(mm) | 37.7(882) |
| Track width,rear | b11 | in(mm) | 36.3(922) |
| Mast/fork carriage tilt forward/backward | α/β | ° | 6/8 |
| lowered mast height | h1 | in(mm) | 85.4(2170) |
| Free lift | h2 | in(mm) | 4.7(120) |
| Lift height | h3 | in(mm) | 118.1(3000) |
| Extended mast height | h4 | in(mm) | 156.6(3977) |
| Overhead load guardheight | h6 | in(mm) | 88.6(2280) |
| Seat height/standing height | h7 | in(mm) | 49.2(1250) |
| Coupling height | h10 | in(mm) | 11.6(295) |
| Overall length | l1 | in(mm) | 127(3225) |
| Length to face of forks | l2 | in(mm) | 84.8(2155) |
| Overall width | b1 | in(mm) | 42.5(1080) |
| Fork dimensions | s/e/l | in(mm) | 1.6/4.7/42.1(40/120/1070) |
| Fork carriage width | b3 | in(mm) | 40.9(1040) |
| Ground clearance ,laden,under mast | m1 | in(mm) | 4.3(110) |
| Ground clearance,centre of wheelbase | m2 | in(mm) | 4.7(120) |
| Turning radius | Wa | in(mm) | 76.8(1950) |
| Travel speed,laden/unladen | | mph(km/h) | 9.3/9.3(15/15) |
| Lift speed,laden/unladen | | fpm(mm/s) | 67/79(340/400) |
| lowering speed,laden/unladen | | fpm(mm/s) | ＜118(＜0.6) |
| Max.Gradient performance,laden/unladen S2 5 min | | % | 15/20 |
| Service brake | | | Hydraulic |
| Drive motor rating $S_2$ 60 min | | hp(kW) | 16.1(12) |
| Lift motor rating at $S_3$ 15% | | hp(kW) | 21.4(16) |
| Battery voltage,nominal capacity $K_5$ | | V/Ah | Lion 80/412(80/544)<br>lead-acid（80/480) |
| Type of drive control | | | AC |
| Operating pressure for attachments | | psi(bar) | 2538(175) |
| Oil volume for attachments | | l/min | 570(36) |
| Sound level at driver's ear according to EN 12 053 | | dB(A) | 73 |

## 2.2 FE4P32C Technical data（list 1-2）

| | | | |
|---|---|---|---|
| Manufacturer's type designation | | | FE4P32C |
| Drive:electric | | | electric |
| Type of operation | | | seated |
| Load capacity/rated load | Q | lb(kg) | 6500（2950） |
| Load centre distance | C | in(mm) | 24(600) |
| Load distance,centre of drive axle to fork | x | in(mm) | 17.5(445) |
| wheelbase | y | in(mm) | 55(1395) |
| Service weight incl. battery(see line 6.5) | kg | lb(kg) | 10175(4850) |
| Type:solid rubber,superelastic,pneumatic, | | | solid rubber |
| Tyres size,front | | | 21×8-15 |
| Tyres size,rear | | | 16x6-10.5 |
| Wheels,number front/rear(×=driven wheels) | | | 2×/2 |
| Track width,front | b10 | in(mm) | 35.5(902) |
| Track width,rear | b11 | in(mm) | 36.3(922) |
| Mast/fork carriage tilt forward/backward | α/β | ° | 6/8 |
| lowered mast height | h1 | in(mm) | 85.4(2170) |
| Free lift | h2 | in(mm) | 4.7(120) |
| Lift height | h3 | in(mm) | 118.1(3000) |
| Extended mast height | h4 | in(mm) | 160.6(4079) |
| Overhead load guardheight | h6 | in(mm) | 88.6(2280) |
| Seat height/standing height | h7 | in(mm) | 49.2(1250) |
| Coupling height | h10 | in(mm) | 11.6(295) |
| Overall length | l1 | in(mm) | 127(3225) |
| Length to face of forks | l2 | in(mm) | 84.8(2315) |
| Overall width | b1 | in(mm) | 42.5(1135) |
| Fork dimensions | s/e/l | in(mm) | 1.6/4.9/42.1(45/125/1070) |
| Fork carriage width | b3 | in(mm) | 43.3(1100) |
| Ground clearance ,laden,under mast | m1 | in(mm) | 4.3(110) |
| Ground clearance,centre of wheelbase | m2 | in(mm) | 4.7(120) |
| Turning radius | Wa | in(mm) | 80.7(2050) |
| Travel speed,laden/unladen | | mph(km/h) | 9.3/9.3(15/15) |
| Lift speed,laden/unladen | | fpm(mm/s) | 67/79(340/400) |
| lowering speed,laden/unladen | | fpm(mm/s) | ＜118(＜0.6) |
| Max.Gradient performance,laden/unladen S2 5 min | | % | 15/20 |
| Service brake | | | Hydraulic |
| Drive motor rating $S_2$ 60 min | | hp(kW) | 16.1(12) |
| Lift motor rating at $S_3$ 15% | | hp(kW) | 21.4(16) |
| Battery voltage,nominal capacity $K_5$ | | V/Ah | Lion 80/412(80/544)<br>lead-acid（80/480) |
| Type of drive control | | | AC |
| Operating pressure for attachments | | psi(bar) | 2538(175) |
| Oil volume for attachments | | l/min | 570(36) |
| Sound level at driver's ear according to EN 12 053 | | dB(A) | 73 |

# Ⅱ The structure, principle and adjustment of the main parts of forklift

## 1.Transmission system

1.1 Overview

The transmission system of forklift truck is composed of reducer assembly, differential assembly and drive axle. The driving gear of the reducer is directly connected with the traveling motor. The traveling speed of the forklift increases with the increase of the motor speed. The change of the driving direction is based on the change of the rotation direction of the motor.

1.2 Wheel hub installation

(1) Add 100ml grease into the wheel hub, and then install it on the shaft. (Figure 2-1)
(2) Tighten the adjusting nut with a torque of about 9.8N·m and then turn it 1/2 turn.
(3) Hang the spring gauge on the bolt to measure the starting torque of the hub. When it reaches the specified value, slowly lock the nut. Start torque: 49N·m-147N·m. (Figure 2-2)

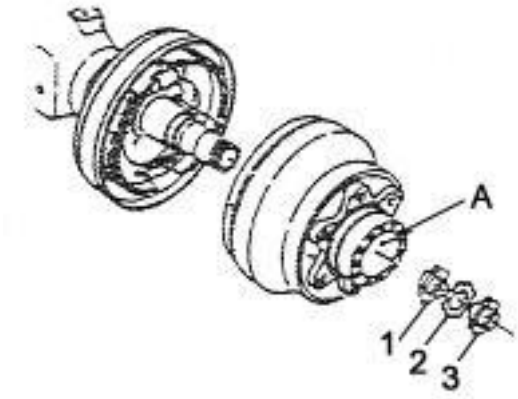


Figure 2-1 Add grease

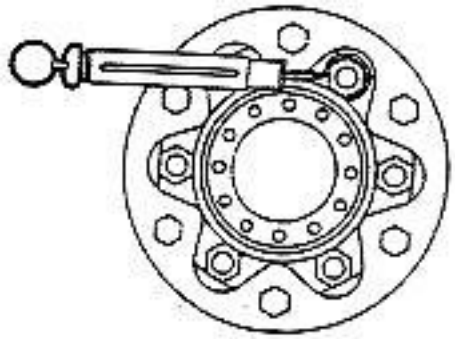

Figure 2-2 Measure the start torque

(4) Install the lock piece and the lock nut, and pull the lock piece to lock and stop.
(5) Tyre assembly
Attach the gas stem and cap to the tyre and assemble the rim. Note the following:
Note: (a) Valve stem at the rim gap and facing outward;
(b) The rim bolt head shall be mounted outwards.

1.3 Malfunction analysis

Table 2-1 Fault Diagnosis and Correction

| Malfunction item | Possible cause | Method of correction |
|---|---|---|
| High vibration | The fastening bolts at each installation connection are loose | Tighten |
| Excess oil temperature | Gear oil deterioration | Replace |
| | Abnormal oil level | Add or subtract |
| | Stuck moving parts | Adjust |
| Oil leak | The bonding surface bolt is loose | Tighten |
| | Seal ring brake | Replace |

| | | |
|---|---|---|
| Noise | Rotating gear damage | Replace |
| | Bearing failure | Replace |

## 2. **Brake System**

2.1 Overview - Schematic diagram of braking system

The braking system is composed of brake pedal, brake master pump and wheel brake, which is the front wheel internal expansion hydraulic brake.

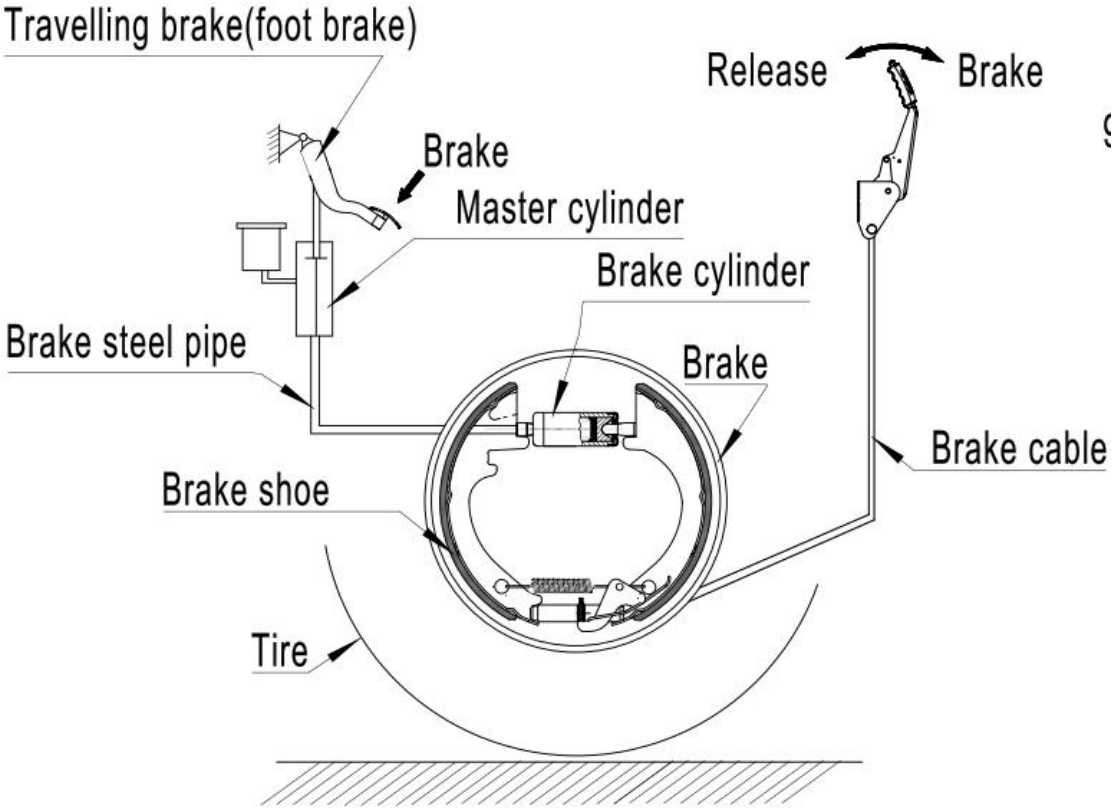


(Schematic diagram of braking system)

(1) When driving, when the foot brake is pressed, the brake fluid in the brake master pump is pushed through the brake steel pipe to enter the brake sub-pump, and the brake shoes are pushed open to realize the service brake; Release the pedal to cancel the service brake.

(2) When parking, when the rear handle brake, the brake shoe is pulled open by the brake to realize the parking brake; Release the pedal to cancel the parking brake.

2.2 Brake pedal

The structure of the brake pedal is shown in Figure 2-3. The pedal converts the stepping force acting on the pedal into brake oil pressure through the push rod of the brake master pump.

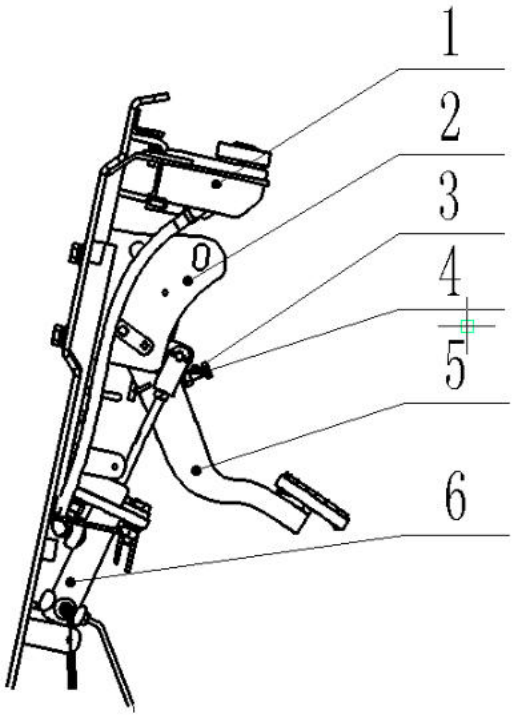


| | | |
|---|---|---|
| 1.grease nipple | 2.brake bearing | 3.brake sensor |
| 4.pedal stopper | 5. brake pedal | 6. brake master pump |

Figure 2-3 Brake pedal assembly

2.3 Brake master pump

The master pump includes a seat, a check valve, a return spring, and a main bowl, piston and auxiliary bowl. The end is fixed with stop washer and stop wire, and the exterior is protected by rubber dust cover. The piston of the master pump acts by operating the brake pedal through the push rod. When the brake pedal is stepped down, the push rod pushes the piston forward, and the brake fluid in the pump body flows back to the oil storage tank through the oil return port until the main leather bowl blocks the oil return hole. After the main bowl is pushed through the oil return port, the brake fluid in the front chamber of the main pump is compressed and the check valve is opened, which flows to the sub-pump through the brake line. In this way, the piston of each sub-pump extends outward, so that the brake shoe friction plate and the brake drum contact, to achieve the effect of slowing down or braking. At this time, the piston rear chamber is replenished by the brake fluid from the oil return and oil intake ports. When the brake pedal is released, the piston is pressed by the return spring, and the brake fluid in each brake pump is also compressed by the brake shoe return spring, so that the brake fluid returns to the main pump (piston front chamber) through the check valve, the piston returns to its original position, and the brake fluid in the main pump flows back to the oil storage tank through the return port. The pressure of the check valve is adjusted to a certain proportion of the remaining pressure in the brake line and brake pump, so that the leather bowl of the score pump is placed correctly to prevent oil leakage, and to eliminate the air resistance phenomenon that may occur when the emergency brake.

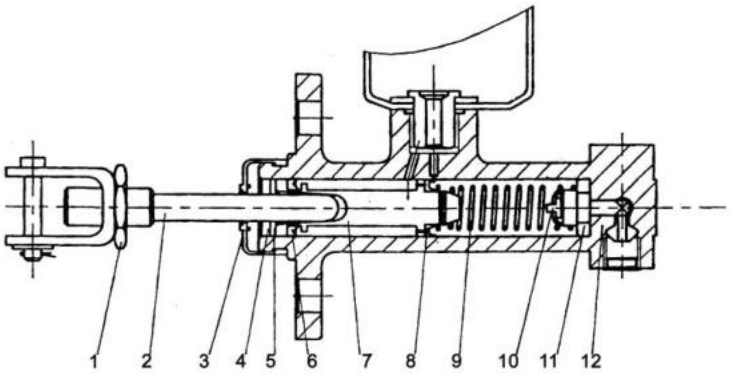


| | | | |
|---|---|---|---|
| 1.lock nut | 2.push rod | 3.dust cover | 4.brake cable wire |
| 5.lock washer | 6.auxiliary leather bowl | 7.piston | 8.main leather bowl |
| 9.spring | 10.check valve | 11.valve seat | 12.pump body |

Figure 2-4 Brake master pump

2.4 Brake

The brakes are double-shoe brakes mounted on both sides of the drive axle. The brake consists of two sets of brake shoes, brake pump and regulator. One end of the brake shoe is in contact with the fixing pin and the other end is in contact with the regulating device. The parking brake part is pressed by the return spring and the compression spring rod. In addition, the brake is also assembled on the parking brake mechanism and automatic adjustment device. Figure 2-5

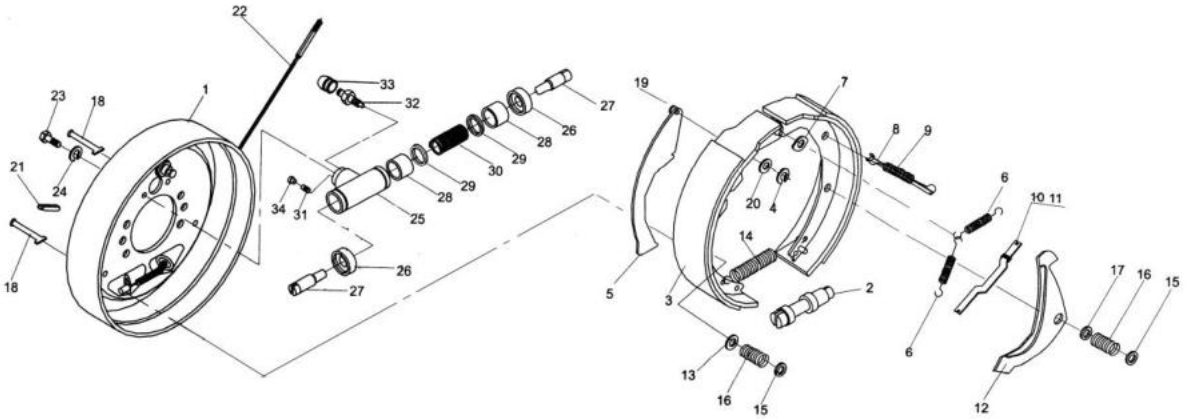

| | | | |
|---|---|---|---|
| 1.brake backing plate assembly | 2.slack adjuster | 3.friction plate assembly | 4.spring washer |
| 5.hand brake lever | 6.return spring | 7.washer | 8.ejector rob |
| 9.return spring | 10.hand brake pushrod | 11.pressure spring | 12.adjusting lever |
| 13.pressure spring holder | 14.spring | 15.pressure spring cover | 16.spring |
| 17. pressure spring holder | 18.pressure spring lever | 19.fulcrum post | 20.washer |
| 21.rubber plug | 22.brake cable assembly | 23.bolt M8×16 | 24.spring washer 8 |
| 25.brake pump cylinder | 26.brake pump shield | 27.brake pump piston ejector rod | 28.piston |
| 29.pump leather bowl | 30.brake pump spring | 31.brake pump oil plug | 32.brake pump bleed screw |
| 33. pump vent screw shield | 34.dust cover | | |

Figure 2-5 Brake

2.5 Parking brake control device

The parking brake handle is CAM type and the braking force can be adjusted by a regulator located at the end of the brake handle.

Adjustment of braking force: Turn the regulator clockwise to increase the braking force; Turning the regulator counterclockwise reduces the braking force.

Tension: 196N ~ 294N

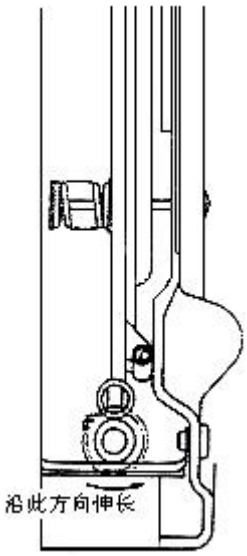


Figure 2-6 Gap self-adjusting mechanism

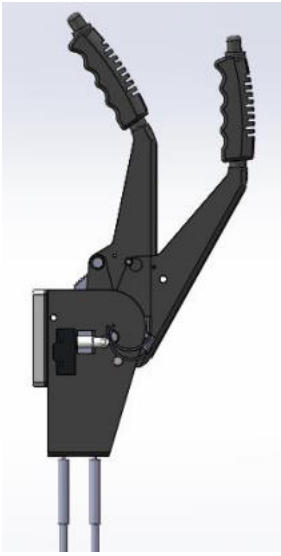

Figure 2-7 Parking brake pedal

2.6 Brake pedal adjustment

(1) Shorten the putter;
(2) Adjust the pedal limit bolt, as shown in Figure 2-12. (b) Adjust the pedal height;
(3) Adjust the length of the push rod until the front end of the push rod contacts the piston of the main pump, and then retreat 1-2 turns to ensure that the free travel of the pedal is between 10mm-20mm;
(4) Lock the push rod nut and pedal limit bolt nut.

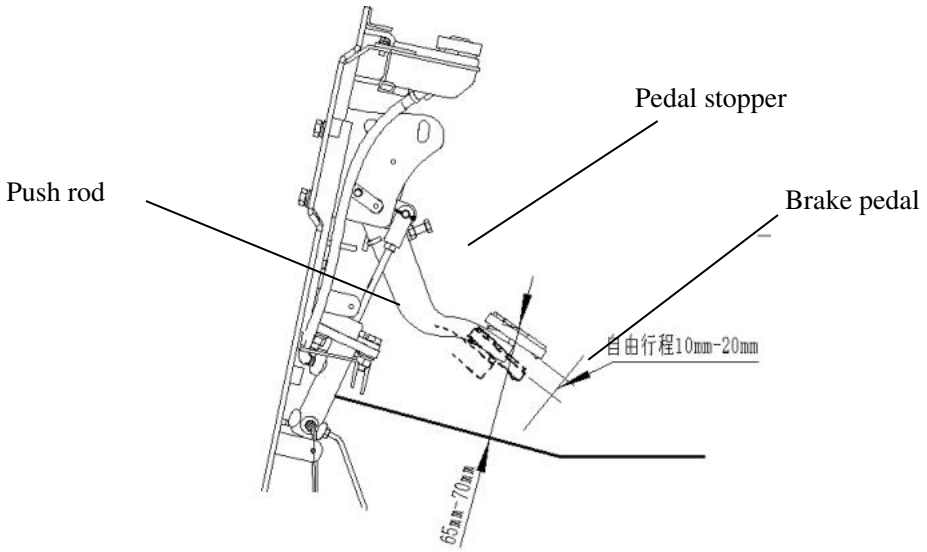


Figure 2-8

(5) Adjust the brake switch as shown in Figure 2-9

(a) Loosen the lock nut of the brake switch after the brake pedal height is adjusted;

(b) Unplug the wire and let it separate;

(c) Turn the switch so that the gap A=1mm;

(d) Confirm that the brake light should be on when the brake pedal is down;

(e)Finally lock the nut.

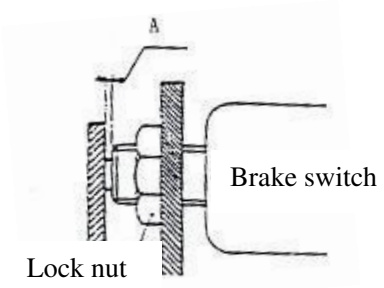


Figure 2-9 Brake light switch

2.7 Fault analysis and remove method

Table 2-3

| Trouble | Analysis of genesis and origin | Remove method |
|---|---|---|
| Poor braking | 1.Oil leakage of brake system | Repair |
| | 2.Brake shoe clearance is not adjusted properly | Adjust regulator |
| | 3.Brake overheat | Check for skid |
| | 4.The brake drum is in poor contact with the friction plate | Readjust |
| | 5.The impurities are attached to the friction plate | Repair or replace |
| | 6.The impurities get mixed into the brake fluid | Check brake fluid |
| | 7.Improper adjustment of brake pedal (micro valve) | Adjust |
| Brake noise | 1.The surface of the friction plate is hardened or impurities are attached to it | Repair or replace |
| | 2.The bottom plate is deformed or the bolt is loose | Repair or replace |
| | 3.Brake shoes are deformed or improperly installed | Repair or replace |

| | | |
|---|---|---|
| | 4.Friction plate wear | Replace |
| | 5.Wheel bearing loose | Repair or replace |
| Uneven braking | 1.There is oil on the surface of the friction sheet | Repair or replace |
| | 2.Brake shoe clearance is adjusted at last | Adjust regulator |
| | 3.Split pump failure | Repair or replace |
| | 4.Brake shoe return spring is damaged | Replace |
| | 5.Brake drum deflection | Repair or replace |
| Weak braking | 1.Oil leakage of brake system | Repair or replace |
| | 2.Brake shoe clearance is not adjusted properly | Repair or replace |
| | 3.The braking system is mixed with air | Release air |
| | 4.Improper adjustment of brake pedal | Readjust |

2.8 Maintenance

1) Gear oil should be added before the new drive axle running test (gear oil should be selected in strict accordance with the instructions, please refer to Table 2-1 for specific models). When refueling, oil should be injected from the refueling hole in the upper part of the axle housing until oil is spilled from the oil level hole in the middle of the axle housing.
2) The thickness of the friction plate on the brake shoe is 8mm. The minimum allowable thickness is 2mm. These two parts are the key parts of the brake system, should be checked once a month, if found excessive wear and tear need to be replaced in time to avoid accidents.
3) Technical maintenance every 50h:
   (1) The gear oil should be replaced after the new bridge works with the main engine for 50h. When changing the oil, the bridge should be cleaned and then added with new oil.
   (2) Check the fastening condition of each fastener, find loose, tighten immediately.
   (3) Check whether there is oil leakage at the connection between the half axle and the hub of the wheel. If there is leakage, reapply sealant.
4) Monthly technical maintenance:
   (1) Check the wear condition of the brake drum for any destructive wear.
   (2) Check the wear of brake shoes. When the wear does not meet the requirements of use, it should be replaced immediately.
   (3) Check whether the oil level of the axle housing meets the requirements. If the oil level decreases, it should be made up in time.
5) Technical maintenance every six months: the gear oil in the bridge should be replaced every six months.
6) Annual technical maintenance: a year of work should be disintegrated inspection.
7) Requirements for inspection and commissioning projects in the installation process:

When the drive axle hub is re-installed, attention should be paid to adjusting the brake clearance regulator, so that the clearance between the brake drum and the friction plate is between 0.3mm ~ 0.5mm. The tapered roller bearing on the wheel hub should be filled with about 100ml of 3# lithium grease.

Wheel rim hub bearing clearance adjustment: tighten the inner nut until the hub brake drum can only barely rotate. Then reverse the inner lock nut 1/8 turn, at this time, the hub brake drum

should be able to rotate freely, no stuck phenomenon, and no obvious axial clearance and yaw phenomenon, then assemble the lock washer, and finally lock with the outer lock nut.

## 3. Steering system

3.1 Overview

The steering system (Figure 2-14) is mainly composed of a steering wheel, steering shaft, steering device, steering oil pump and steering bridge. The steering shaft is connected with the steering gear through the universal joint, and the connecting shaft is connected with the steering wheel through the universal joint. The steering string can be tilted to the appropriate position through the handle (A). The steering axle is installed on the tail frame at the rear of the frame, and there is a steering joint on the left and right respectively. The steering joint is driven by the piston rod of the steering cylinder through the connecting rod to deflect the steering wheel and realize steering.

Figure 2-10 Steering control device

Reinstallation checking of steering system

(1) Turn the steering wheel around and play to see whether the force is uniform, whether the rotation is smooth;
(2) Check whether the oil pressure pipeline layout is correct and whether the left and right steering is inverted;
(3) Push up the rear wheel, slowly turn the steering wheel left and right, and repeat several times to remove air from the hydraulic line and cylinder.

3.2 Fault analysis

Table 2-4

| Trouble | Cause analysis | Remove method |
|---|---|---|
| Failure of steering wheel | The oil pump is damaged or malfunctioning. | Replace |
| | The hose or joint is damaged or the pipe is blocked. | Replace or clean |
| Steering wheel overweight | The safety valve pressure is too low. | Adjust pressure |
| | There is air in the oil line. | Eliminate air |
| | Steering gear reset failure, positioning | Replace leaf spring |

| | | |
|---|---|---|
| | spring broken or insufficient elasticity. | |
| | There is too much leakage in the steering cylinder. | Check the piston seal |
| The forklift snake or swing | The spring is broken or unelastic. | Replace |
| Loud work noise | The oil level in the tank is low. | Add oil |
| | Suction tube or oil filter is blocked. | Clean or replace |
| Oil leak | The steering cylinder guide sleeve seal is damaged or the pipe or connector is damaged. | Replace |

## 4. Electric system

The electric system of FE4P25-32C forklift truck is powered by 80V lead-acid/lithium battery pack. The traction power of the vehicle is provided by AC motor. The lifting power of goods is driven by the AC motor to generate oil pressure from the oil pump, and then the cargo fork is lifted, tilted and moved sideways by the hydraulic pipeline through the hydraulic cylinders on both sides of the mast. The acoustooptic system is powered by lead-acid/lithium battery at 80V to 24V.

4.1 Control system

AC controller AC controller, this type of controller integrates high safety, reliability, flexibility, convenient operation in one, through advanced control software to ensure that the motor in different modes, can run smoothly, including full speed and high torque state regenerative braking, zero speed and torque control, proprietary input/output port and software, The controller can ensure the economy and high efficiency of electromagnetic braking and hydraulic control system. The selected AC variable frequency motor is efficient, durable and basically maintenance-free.

The control system is mainly Curtis system.

Figure 2-11 Curtis controller

Forklift traction is AC variable-frequency motor, steering is AC variable-frequency motor controller, the dashboard display screen and AC drives adapts products from **Curtis**, The adopted AC variable-frequency motor is high efficient, durable and maintenance free, basically because it has no DC motor commutator (commutator can limit the acceleration performance of truck, especially in high speed situation, it will limit braking torque), so its accelerating ability is faster. Controller is used for electric truck which use CANopen protocol controller for communication, through its analog and digital I/O and communications devices, it is very suitable for management of forklift movement, I/O operation, control and information display, it can discharge of battery monitoring, with all kinds of protection function. Dashboard display can show many data, undertake factory or user setting, can input multiple functions such as user commands.

4.2 Electrical schematic diagram

4.2.1 Electrical schematic diagram—Curtis(Figure2-12)

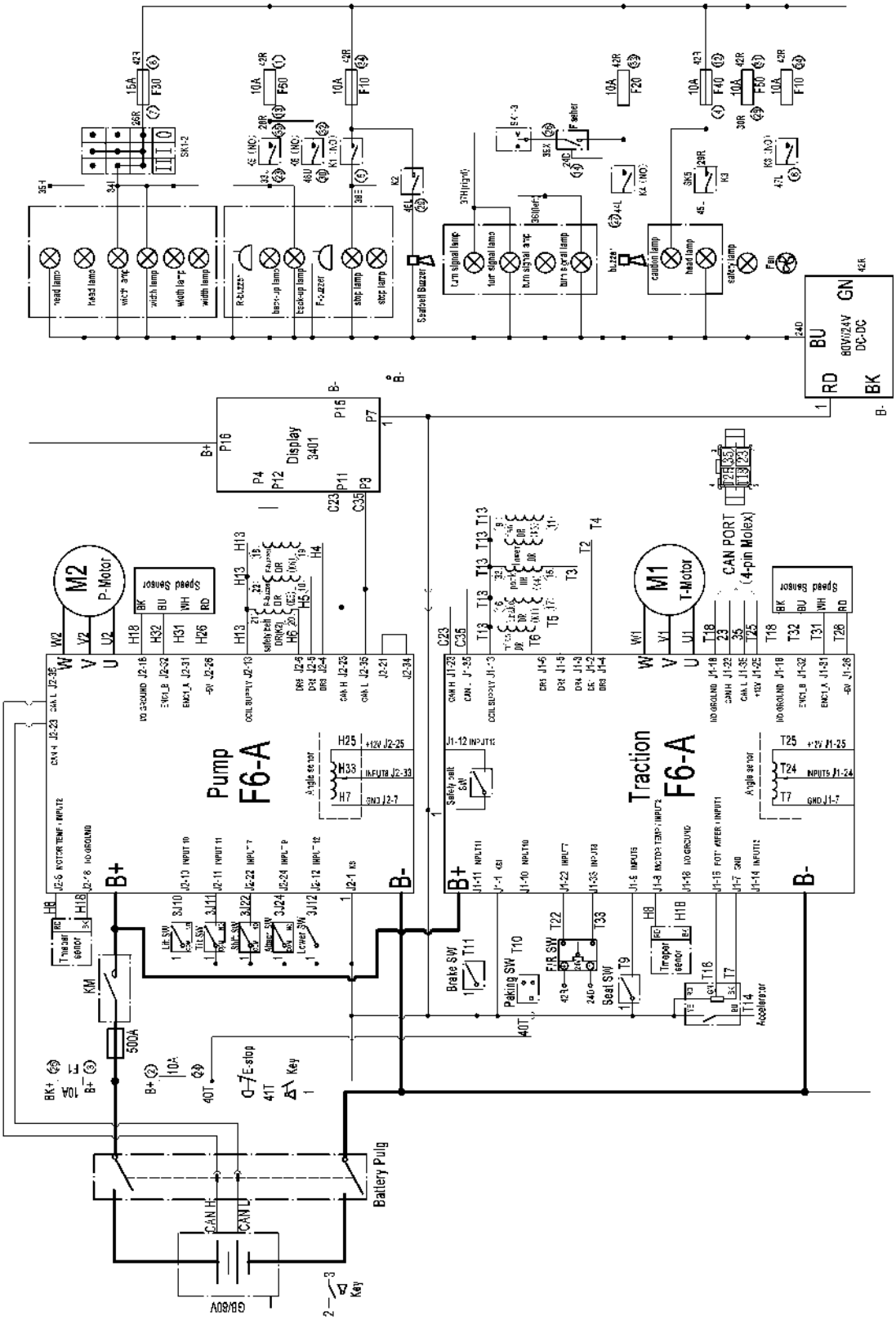


Figure2-12 Electrical schematic diagram—Curtis

4.3 Combination instrument

4.3.1 Instrument display function (Curtis system)

| | | | |
|---|---|---|---|
| 1 | Parking | 13 | Steering Angle |
| 2 | Seat | 14 | Display Menu |
| 3 | Brake Pedal | 15 | Display Menu |
| 4 | Lift lock | 16 | Display Menu |
| 5 | Fault alarm | 17 | Display Menu |
| 6 | Safety Belt | 18 | H Mode |
| 7 | Forward/Reverse | 19 | S Mode |
| 8 | Battery level | 20 | E Mode |
| 9 | Working Time | 21 | Tortoise Mode |
| 10 | Travel Speed | 22 | Cancel/- |
| 11 | Speed Mode | 23 | Enter/+ |
| 12 | Control Fault | 24 | Nothing |

Figure 2-13 Curtis instrument

4.4 Failure analysis

1）**Curtis Controller fault table and diagnostics guide**

| Code display on the programmer | Code display on the instrument | Troubleshoot | Fault cause |
|---|---|---|---|
| Controller Over current | 1.2 | Controller current overload | 1.Motor outside U. V or W connection short circuit;<br>2.Motor parameter mismatching;<br>3.Controller failure. |
| Current Sensor Fault | 1.3 | Current sensor failure | 1. motor U.V.W truck circuit. lead to current leakage;<br>2. controller failure. |
| Precharge Failed | 1.4 | Precharge failure | 1. Capacitor positive end external load. The capacitor cannot be charged properly. |
| Controller Severe Undertemp | 1.5 | Controller temperature too low | 1.The controller working environment is too harsh |
| Controller Severe Overtemp | 1.6 | Controller temperature too high | 1.The controller working environment is too harsh;<br>2.Truck overloaded;<br>3.The controller is wrongly assembled; |
| Severe Undervoltage | 1.7 | Voltage too low | 1.Battery parameter is wrongly set;<br>2. No controller system power consumption;<br>3.The battery impedance is too large;<br>4.Battery connection is disconnected; |

| | | | |
|---|---|---|---|
| | | | 5.The fuse is disconnected, or main contactor is not connected. |
| Severe Overvoltage | 1.8 | Voltage too high | 1. The controller working environment is too harsh;<br>2. Truck overloaded;<br>3.Regenerative braking when the battery connection is disconnected. |
| Speed Limit Supervision | 1.9 | Speed limit supervision | 1.The detected motor Speed exceeds the limit set by Max Speed;<br>2. Max Speed improperly adjusted monitoring parameters;<br>3. See: Programmer »Application Settings» Maximum Speed Monitor Menu. |
| Travel Control Supervision | 1.10 | Walking control supervision | 1. Vehicle stopped state. Detected motor frequency and/or phase current outside of travel specified limit control monitoring parameters;<br>2.Improper travel control supervises parameters;<br>3. See: Programmer» Application Settings »Trip Control Supervises Menu. |
| Controller Overtemp Cutback | 2.2 | Controller temperature too high, as a result the performance is not good | 1.The controller working environment is too harsh;<br>2.Truck overloaded;<br>3.The controller is wrongly assembled. |
| Undervoltage Cutback | 2.3 | Voltage too low, as a result the performance is not good | 1.Battery power is insufficient;<br>2. Battery parameter is wrongly set;<br>3. Non controller system power consumption;<br>4. The battery impedance is too large;<br>5. Battery connection is disconnected;<br>6.The fuse is disconnected, or main contactor is not connected. |
| Overvoltage Cutback | 2.4 | Voltage too low, as a result the performance is not good | 1.Regenerative braking current causes battery voltage increase during |

| | | | |
|---|---|---|---|
| | | | regenerative braking;<br>2. Battery parameter is wrongly set;<br>3. The battery impedance is too large;<br>4. Regenerative braking |
| Ext 5V Supply Failure | 2.5 | Controller output 5V, poer supply failure | 1.External load impedance is too low. |
| Ext 12V Supply Failure | 2.6 | The external 12V power supply is faulty | Fault type: External load impedance +12V power supply is too low.<br>1.12 V Power supply voltage is out of range;<br>2.12 V power current is out of range. |
| Motor Temp Hot Cutback | 2.8 | The motor overheats resulting in performance loss | 1. The motor temperature reaches or exceeds the alarm temperature set by the program. The current output decreases;<br>2. Motor temperature parameter setting is wrong;<br>3. If the motor does not use a temperature sensor. Programming parameters "Tempcompensation" and "Temp<br>cutback must be set to OFF. |
| Motor Temp Sensor | 2.9 | Motor temperature sensor is faulty | 1. The motor temperature sensor is incorrectly connected;<br>2. If the motor does not use a temperature sensor. Programming parameter "MotorTemp Sensor Enable must be set to "OFF". |
| MAIN DRIVER | 3.1 | Main contactor coil open/short circuit | 1. The load is connected in an open or short circuit;<br>2. Connection pins are stained;<br>3. The cable connection is incorrect. |
| EM Brake Driver | 3.2 | The electromagnetic brake coil is open or short circuited | 1. The load is connected to an open or short circuit;<br>2. Connection pins are stained;<br>3. The cable connection is incorrect. |
| Lower Driver | 3.5 | Proportional drive open/short circuit | 1. The load is connected to an open or short circuit;<br>2. Connection pins are |

| | | | |
|---|---|---|---|
| | | | stained;<br>3. The cable connection is incorrect. |
| Encoder Fault | 3.6 | Encoder fault | 1. Loss of regulation;<br>2. Pulse of overcurrent trip loss;<br>3. Speed signal pulse loss;<br>4. Automatic characterization;<br>5. The power supply (voltage) of the encoder is faulty. |
| Motor Open | 3.7 | Motor open circuit | 1. Motor phase missing or broken;<br>2. Poor crimping or cable connection. |
| Main Contactor Welded | 3.8 | Main contactor adhesion | 1. The main contactor contacts are fused;<br>2. Motor U or V phase is disconnected or missing;<br>3. The circuit connected to the B+ terminal charges the capacitor. |
| Main Contactor Did Not Close | 3.9 | The main contactor is not closed | 1. The main contactor is not closed;<br>2. Oxidation of main contactor contacts. Melt. Or the connection is unstable;<br>3. The capacitor is charged by external devices;<br>4. The fuse is disconnected. |
| Motor Setup Needed | 3.10 | Motor setup required | Motor setup is required. For details, see Fault Type.<br>1.The current regulator needs to be configured.<br>2.Need to run slip gain test.<br>3.The basic speed test needs to be run.<br>4.Automatic test needs to be run (full motor debugging). |
| Throttle Wiper Low | 4.2 | Accelerator output is low | 1. Throttle voltage over analog low or analog high Analog input parameters are defined for the throttle input.<br>2. See Programmer » Controller Settings » Input » Emulation 1 type.<br>3. See Programmer » Controller Settings » Input |

| | | | |
|---|---|---|---|
| | | | » Configuration. |
| Pot2 Wiper Low | 4.4 | Accelerator output is low | The associated diagnostic brake input source (assign analog X input) is triggered by the corresponding fault. |
| EEPROM Failure | 4.6 | NV memory fault | 1. Non-volatile (NV) memory cannot be read or written.<br>2. The internal controller is faulty. |
| HPD/Sequencing Fault | 4.7 | High pedal protection /operation order failure | 1.The key start. interlock. direction. and the accelerator input order is wrongly set.<br>2. 2. Wiring. switch key. interlock. direction. or accelerator input failure.<br>3. The water input switch in the above figure results in an invalid (true) on/off state.<br>4. Verify the input switch status. See Programmer » System Monitor menu » Input » Switch Status.<br>5. Verify the throttle. See Programmer » System Monitor Menu » Enter » Throttle command |
| Emer Rev HPD | 4.7 | Emergency reverse high pedal protection | 1.Emergency reverse operation is over. but the forward. reverse input and interlock of the accelerator are not reset. |
| Parameter Change Fault | 4.9 | Parameter change failure/wrong | 1.In order to ensure the safety of the truck. some specific parameter changes must come into force after the key switch is restarted. |
| EMR Switch Redundancy | 4.10 | EMR switches are redundant | 1. The emergency reverse input switch doesn't work. Causes an invalid state.<br>Switch NC<br>Condition<br>on off<br>valid<br>off on<br>valid<br>on on<br>invalid<br>off off |

| | | | |
|---|---|---|---|
| | | | invalid<br>2. The entry of dirt moisture in the switch. |
| VCL Tra HPD Fault | 5.1 | Travelling HPD failure | 1.The forward switch/backward signal is displayed during power-on.<br>2.The accelerator is on signal when it is powered on |
| Pump HPD Fault | 5.1 | Pump HPD fault | When powered on, lift. Tilt. Lateral shift. Genus has signal. |
| Tra PDO Timeout | 5.2 | Traveling PDO timeout | 1.The CAN cable connection is incorrect.<br>2.The baud rate is inconsistent.<br>3.The bus resistance is abnormal. |
| VCL_Lower_SRO_Fault | 5.3 | The descending operation sequence is faulty. | The drop switch signal is valid during power-on. |
| Pump PDO Timeout | 5.7 | Oil pump controller PDO timeout | 1.The CAN cable connection is incorrect.<br>2.The baud rate is inconsistent.<br>3.The bus resistance is abnormal. |
| BMS PDO Timeout | 5.8 | BMS PDO timeout | 1.3401/ The controller battery type is incorrectly configured<br>2.The CAN cable connection is incorrect.<br>3.The baud rate is inconsistent.<br>4.The bus resistance is abnormal. |
| Seat Belt Alarm | 5.9 | Safety belt alarm | When the speed is higher than 4km/h, the safety belt is not worn. |
| Wrong 3401 Model | 6.2/6.3/6.4/6.5 | The model 3401 is incorrect | 1. The CAN bus is abnormal.<br>2. The instrument model or software is incorrect. |
| Steer Sensor Pot Fault | 6.6 | Angle sensor fault | 1. Reset the corner potentiometer.<br>2. The Angle potentiometer is faulty. |
| VCL Run Time Error | 6.8 | VCL wrong running time | 1.VCL the code timed out the running time. |
| PDO Timeout | 7.2 | PDO timeout | 1.CAN the information receiving time exceeded the PDO time limit. |

| | | | |
|---|---|---|---|
| Stall Detected | 7.3 | Motor stalling | 1.Motor stalling.<br>2. Motor encoder failure.<br>3. The cable connection is incorrect.<br>4. The power supply of the input motor encoder is faulty. |
| Supervisor Fault | 7.7 | Supervisor Fault | 1. The data did not match during the inspection.<br>2. Inspect the internal damage of the microprocessor<br>3. The switch input value can exceed 100ms in the upper and lower ranges. |
| Supervision Input Check | 7.9 | Supervision Input Check | The internal controller is faulty. |
| PDO Mapping Error | 8.2 | PDO mapping Error | 1. Excessive allocation of PDO Map data or incompatibility with byte mapping of objects.<br>2. Adjust the PDO Settings. See Programs » Application Settings »CAN interface »PDO Settings. |
| Internal Hardware | 8.3 | Internal Hardware | An internal controller failure has been detected |
| Driver 1 Fault | A1 | Driver 1 failure (drop solenoid valve) | 1.The descending solenoid valve is disconnected or short-circuited.<br>2.The pin of the connector (T13 or T2) on the controller is dirty or the contactor coil is dirty.<br>3.The connector is improperly crimped or connected.<br>4. Drive overcurrent, drive 1 overcurrent parameters. |
| Driver 5 Fault | A5 | Driver 5 failure (contactor) | 1.The contactor load is broken or short-circuited.<br>2. The connector pin on the controller is dirty or the contactor coil is dirty.<br>3.The connector is improperly crimped or connected.<br>4.Drive overcurrent, drive 5 overcurrent parameters. |

4.5 Maintenance of circuit system

(1) Check the contact wear condition; replace the contact if it’s worn and the contact should be checked every three months.

(2) Check the pedal and tiller micro switch; Measuring the voltage drop at the ends of the micro switch, there is no resistance when the micro switch micro open closure should be without resistance, when released should have a clear voice. Check once every three months.

(3) Check the main circuit: battery- controller- connecting cable of the motor. To ensure that the cable insulation is good, the clamp circuit connection is fixed. Check once every three months.

(4) Check the pedal mechanical movement to see whether the spring will deform, whether potentiometer spring can stretch out or draw back to the maximum level or set levels. Check once every three months.

(5) Check the contactor mechanical movement, the contactor should move freely without adhesion, mechanical movements of the contactor shall be inspected once every 3 months.

# 5. Traction power battery

5.1 Lead-acid battery

5.1.1 Lead-acid battery instructions

● Battery life is generally about 2 to 3 years, if used and maintained properly, can be used for more than 4 years. If not used and maintained properly, it will be damaged early within a few months.

● The height of the electrolyte should be checked regularly in the use of the battery, and the storage status of the battery should be checked and supplemented in time. Battery maintenance is simple, but requires patience and care. Do a good job of electrolyte supplement and density control, battery and pole pile cleaning work, can effectively extend the battery life.

● Check whether there is water in the battery box. Drain the water immediately.

● In addition, the battery should not be with electrolyte storage, if you want to short-term storage has been used and fully charged battery, in the storage period every other month to charge once, in order to compensate the battery self-discharge and prevent the battery plate vulcanization or eliminate the battery plate slight vulcanization, and often to check the status of the battery.

● Battery in use, if not full charge full discharge, every month to carry out a full discharge full charge. This preserves the battery's capacity and avoids plate acidification.

● The outside of the battery should be kept clean

● Check the fixing of the accumulator and the collet of the leading wire. There should be no loosening.

● Check the battery shell should not be cracked and damaged, pole and lead collet should not be burned.

● Wipe the dust outside the battery with a cloth. If there is electrolyte overflow on the surface, the cloth can be used to wipe away the dirt or wash with hot water, and then dry with a cloth. Clean the dirt and oxide on the pole pile head, wipe the outside of the connecting line and the lead chuck, remove the dirt. Dredge the vent hole of the liquid filling cover and clean it. Apply a thin layer of industrial petroleum jelly to the pole and lead collet during installation.

⚠ Charge the battery according to the charger instructions.

5.1.2 Lead-acid battery recovery and disposal

● In order to avoid environmental damage, shall not handle the used machine oil, battery, filter. Dispose of such waste products in accordance with local laws or contact Noli distributor or authorized waste disposal agency.

● Oil and gas, chemicals, batteries, tyres and other combustible materials must be stored in a safe place to prevent fire and damage to the environment. Illegal disposal of these materials can

lead to environmental damage. Please contact Nori Sales or professional waste disposal agency to properly dispose of these materials.

● As part of routine pre-operation inspection, check the entire forklift to ensure there are no oil leaks or fluid leakage.

Leakage can contaminate the environment and may indicate mechanical failure of the forklift.

● When the battery is replaced with a new one or the whole forklift is scrapped, the battery should be processed and recycled

Consider environmental hazards. For example, some battery forklifts use lead-acid and lithium batteries.

● Batteries contain materials that are harmful to the environment and humans, so batteries should be returned or sent to manufacturing

Trade or waste disposal agency for better recycling.

5.2 Lithium battery

5.2.1 Lithium battery instructions

● Lithium phosphate lithium ion battery refers to the lithium ion battery with lithium phosphate as the cathode material. The main application direction is the power battery. Compared with lead-acid battery, this type of battery has the characteristics of small volume, light weight, long cycle life, high safety, green pollution and so on.

● The charging of lithium battery should be carried out in strict accordance with the requirements on the lithium charger. The charging temperature range is: 0 ~ 40°C. Under the low temperature environment below 0℃, high rate charging will cause damage to the battery.

● Discharge temperature range: The discharge capacity at -25 ~ 50°C (-25 ~ 0) may be lower than that at normal temperature. The battery can be used at 40 ~ 50°C. However, if the battery temperature is too high, especially if the battery is in a high temperature environment for a long time, the aging of the materials inside the battery will be accelerated and the service life of the battery will be shortened

If the ambient temperature exceeds the temperature range, the battery performance may be adversely affected or damaged, and the battery life may be shortened.

⚠ **Warning: Please use the battery pack in strict accordance with the conditions specified in the battery pack instruction manual, otherwise it may not be included in the warranty scope:**

Do not operate electric vehicles equipped with lithium batteries at temperatures above 55 ° C or below -25 ° C

● Low temperature environment below 0℃, please charge the vehicle immediately after use.

● Do not flush the battery container directly to prevent water from entering the battery container

● For non-professionals, do not touch, move, or disassemble the battery pack, the corresponding high-voltage cable, or other parts with high-voltage warning labels

Note:

● In order to achieve a better use effect, extend the battery life, contact the manufacturer every year, and by the manufacturer's technical personnel for a battery performance test and balanced charging

● Stop the vehicle in a safe area and check the battery pack area for damage if the vehicle is subjected to a strong collision while driving

● When the vehicle or battery pack is on fire, quickly leave the vehicle to a safe distance, use a dry powder fire extinguisher for treatment, using water or incorrect fire extinguisher may lead to electric shock

● According to the characteristics of the battery, the battery capacity attenuation range is 0% ~ 25% in the three-pack life

Do not immerse the battery pack in water or make it wet.

● Do not put the battery pack into the fire or expose it to the high temperature environment beyond the temperature conditions specified in the instructions of the lithium battery for a long time, otherwise it may lead to fire. Do not use or store battery packs near heat sources;

● Do not short-circuit the positive and negative electrodes of the battery pack;

● Connect the positive and negative terminals of the battery pack in strict accordance with the signs and instructions, do not reverse charge;

● Do not use nails or other sharp objects to Pierce the battery pack housing, do not hammer or foot the battery pack;

● It is forbidden to decompose the battery pack and battery in any way;

● Do not put the battery pack in the microwave oven or pressure vessel.

● When electrolyte leaks, avoid skin and eyes contact with electrolyte. If exposed, wash the area with plenty of water and seek medical help. No person or animal is allowed to ingest any part of the battery or any substance contained in the battery;

● Try to protect the battery from mechanical shock, collision and pressure impact, otherwise the battery pack may short circuit, high temperature and fire;

● Do not use the battery pack in extremely hot environment, such as direct sunlight or hot days in the car. Otherwise, the battery pack will overheat, which will affect the performance and shorten the service life of the battery pack.

● The battery pack in the process of charging and discharging, if there is a peculiar smell, abnormal sound, please stop charging or discharging immediately;

● If the above phenomenon, please contact the manufacturer, do not disassemble without permission

5.2.2 Storage of lithium batteries

If the battery string is stored for a long period of time (more than six months), the lithium battery must be completely powered off. It is recommended that the battery string be stored at a capacity of at least 60% and the ambient humidity not higher than 95%RH.

A full - load store is performed within the specified time as required.

| Storage Temperature | Storage relative humidity | Storage time |
|---|---|---|
| -10～0° C | 5%～95% | ≤6 months 60%SOC |
| 0～40° C | 5%～95% | ≤6 months 60%SOC |
| 40～45° C | 5%～95% | ≤2 months 60%SOC |

## 6. Hydraulic system

6.1 Overview- Hydraulic system schematic diagram

The hydraulic system consists of oil pump, multi-way valve, lifting cylinder, tilt cylinder and pipeline components. As shown in Figure 2-14

The hydraulic oil is supplied by a hydraulic pump connected to the motor and then distributed to the cylinders by a multi-way valve.

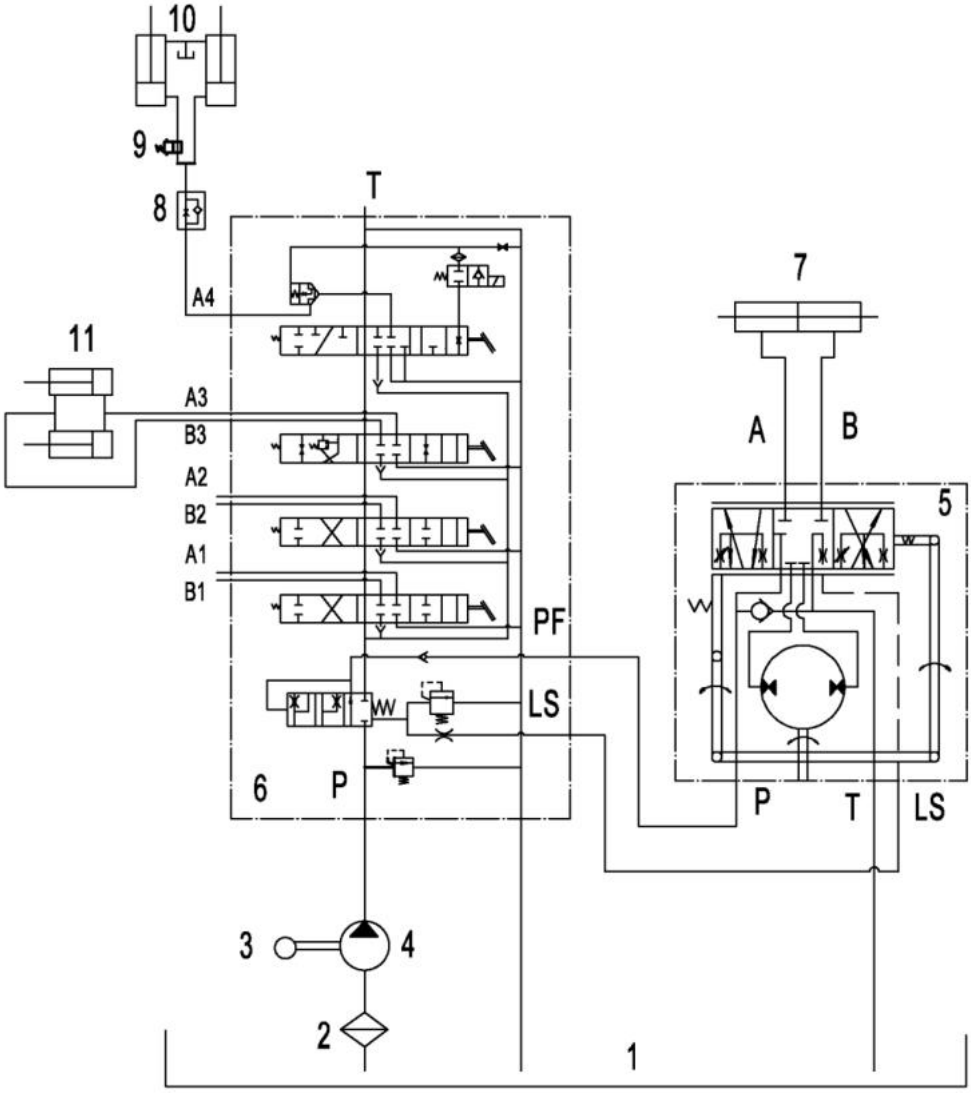


| | | | |
|---|---|---|---|
| 1.hydraulic oil tank | 2.suction filter | 3.pump motor | 4.gear pump |
| 5.diviter | 6.multiway valve | 7.steering cylinder | 8. governor valve |
| 9.shut-off valve | 10.lifting jack | 11.dump ram | |

Figure 2-14 Hydraulic system schematic diagram

6.2 Oil pump

The oil pump is a hydraulic gear pump.

6.3 Multiway valve

Oil pump for hydraulic gear pump multi-way valve adopts two-piece four-type, hydraulic oil from the working oil pump through the multi-way valve stem control, the high pressure oil distribution to the lifting cylinder or tilt cylinder. Multi - way valve has a safety valve and self - locking valve. The safety valve is located on the upper side of the oil inlet of the multi-way valve to

control the system pressure; The self-locking valve is located on the tilt valve disc, which is mainly used to prevent the tilt cylinder from misoperating the joystick under the condition of no pressure source and causing serious consequences. A one-way valve is arranged between the oil inlet and the oil inlet of the lifting valve disc and between the oil inlet of the lifting valve disc and the oil inlet of the tilt valve disc.

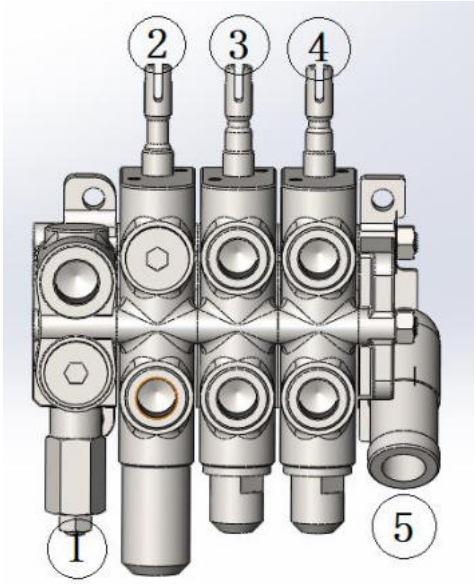


1.safety valve
2. link of lifting
3.link of inclination
4.link of accessory
5.return port

Figure 2-15 Multiway valve outline diagram

Multi-way valve operation Figure 2-16

Multiway valves are operated by joysticks, all of which are mounted on a connecting shaft, which is fixed to the body via a bracket, and the joystick operates the spool valve through a connecting rod.

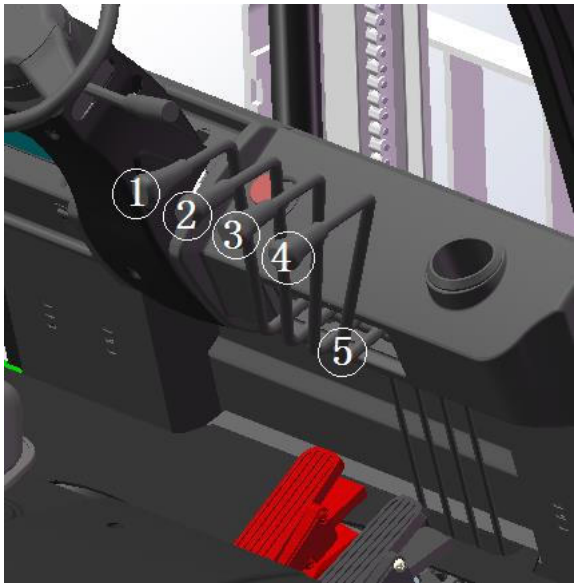


1.lifting joystick 2. tilt joystick 3. attachment joystick 1
4.attachment joystick 2 5. connecting rod

Figure 2-16 Multi-way valve

Relief valve pressure adjustment

⚠ **The safety valve pressure has been set by the manufacturer, the user is not allowed to adjust.**

6.4 Fault analysis

If the hydraulic system fails, find out the cause according to the table below and make the necessary repairs.

(1) Multi-way valve fault analysis (Table 2-4)

Table 2-4

| Fault | Cause | Repair method |
|---|---|---|
| The lifting oil pressure is not high | Slide valve stuck | Wash after decomposition |
| | Oil hole blockage | Wash after decomposition |
| Vibration<br>Slow pressure rises | Slide valve stuck | Wash after decomposition |
| | Insufficient exhaust gas | Exhaust gas fully |
| The steering oil pressure is greater than the specified value | Slide valve stuck | Wash after decomposition |
| | Oil hole blockage | Wash after decomposition |
| Not up to the required amount of oil | The pressure relief valve is improperly adjusted | Adjust |
| Noise | The pressure relief valve is improperly adjusted | Adjust |
| | Sliding surface wear | Replace the pressure relief valve |
| Oil spill (external) | The O-ring is aged or damaged | Replace O-ring |
| Set pressure low | Spring damaged | Replace spring |
| | Valve seat surface broken | Adjust or replace the pressure relief valve |
| Oil spill (internal) | Valve seat surface damaged | Corrected seat surface |
| Set pressure high | Stuck valve | Wash after decomposition |

(2) Pump fault analysis (Table 2-5)

Table 2-5

| Fault | Cause | Repair method |
|---|---|---|
| Less oil discharge | The tank level is low | Add oil to the prescribed amount |
| | Clogged tubing or oil filter | Clean or replace is needed |
| Pump pressure is low | ●Liner plate damage<br>●Failure of support<br>●Bad seal ring, liner or check ring | Replace |
| | The pressure relief valve is improperly adjusted | Adjust the relief valve pressure to the specified value with the pressure gauge. |
| | There's air in the system | ●Re-tighten the suction side tubing<br>●Add oil<br>●replace the oil seal of the oil pump |

| | | |
|---|---|---|
| Noise during operation | The suction pipe is damaged or the oil filter is blocked | Check pipes or repair oil filters |
| | The oil suction side is loose and leaking | Tighten loose particles |
| | Oil viscosity is too high | Replace the viscosity oil suitable for the pump operating temperature |
| | There are bubbles in the oil | Find out the cause of the bubbles and take action |
| Oil leakage of pump | Pump oil seal or part seal ring is damaged | Replace |
| | Pump damage | Replace |

## 7. Lifting system

7.1 Overview

The lifting system is a two-stage roller type vertical lifting and shrinking, which is composed of inner and outer masts and fork arm carrier.

7.1Inner and outer mast

The inner and outer masts are welded parts. The bottom of the outer mast is mounted on the drive axle with a support.

The middle part of the outer mast is connected with the frame through the tilt cylinder, and can tilt forward and backward under the action of the tilt cylinder.

7.2Fork arm carrier

The fork arm carrier rolls in the inner mast through the main roller, the main roller is mounted on the main roller shaft and stuck with an elastic retaining ring. The main roller shaft is welded to the fork arm carrier, and the side roller is integrated on the composite roller, rolling along the inner mast wing plate, which can be adjusted. To prevent rolling clearance, 2 fixed side rollers are used to roll along the outside of the inner gantry wing panel. The longitudinal load is borne by the main roller, which emerges from the top of the gantry when the fork is raised to the top. Lateral loads are supported by side rollers. The fork arm carrier rolls in the inner mast through the main roller, the main roller is mounted on the main roller shaft and stuck with an elastic retaining ring. The main roller shaft is welded to the fork arm carrier, and the side roller is integrated on the composite roller, rolling along the inner mast wing plate, which can be adjusted. To prevent rolling clearance, 2 fixed side rollers are used to roll along the outside of the inner gantry wing panel. The longitudinal load is borne by the main roller, which emerges from the top of the gantry when the fork is raised to the top. Lateral loads are supported by side rollers. The fork arm carrier rolls in the inner mast through the main roller, the main roller is mounted on the main roller shaft and stuck with an elastic retaining ring. The main roller shaft is welded to the fork arm carrier, and the side roller is integrated on the composite roller, rolling along the inner mast wing plate, which can be adjusted. To prevent rolling clearance, 2 fixed side rollers are used to roll along the outside of the inner gantry wing panel. The longitudinal load is borne by the main roller, which emerges from the top of the gantry when the fork is raised to the top. Lateral loads are supported by side rollers.

7.3Position of roller

There are two kinds of rollers: outer mast composite roller and inner mast and fork arm carrier composite roller. Install the outer mast, the inner mast and the fork arm carrier respectively. The composite roller is composed of a main roller and a measuring roller. The main roller bears the load in the front and rear direction, and the side roller bears the side load, so that the inner mast and the fork arm carrier can move freely.

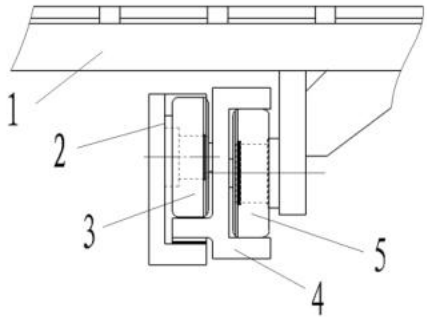


1.fork arm carrier 2. outer mast 3.outer mast composite roller
4.inner mast 5inner mast and fork arm carrier composite roller
Figure 2-17 Position of roller

Note: (a) Adjust the clearance of side rollers to 0.5mm;
(b) Butter main roller surface and mast contact surface.

7.4 Maintenance

7.4.1 Lifting cylinder adjustment (figure 2-18)

When the lifting cylinder, inner mast or outer mast is removed and replaced, the lifting cylinder stroke needs to be adjusted again. The adjustment method is as follows:

(1) Insert the piston rod head into the inner mast beam without adjustment pad.
(2) Slowly rise the mast to the maximum extension of the oil cylinder, and check whether the two oil cylinders are synchronized.
(3) Add an adjustment pad between the piston rod head of the cylinder and the beam of the inner mast. Adjust pad thickness 0.2mm and 0.5mm.
(4) Adjust the tension degree of the chain.

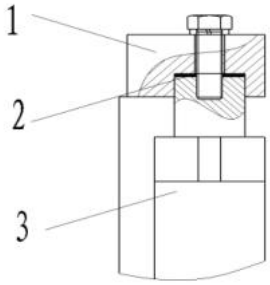


1.inner mast beam 2. lifting cylinder adjustable pad 3. lifting cylinder
Figure 2-18 Lifting cylinder adjustment

7.4.2 Fork arm carrier height adjustment

(1) Park the car on a level surface and make the mast vertical.
(2) Make the bottom surface of the fork arm carrier contact the ground, and adjust the adjusting nut of the upper end joint of the chain so that there is A certain distance A(A=24 ~ 29) between the main roller and the lower end face of the inner mast.

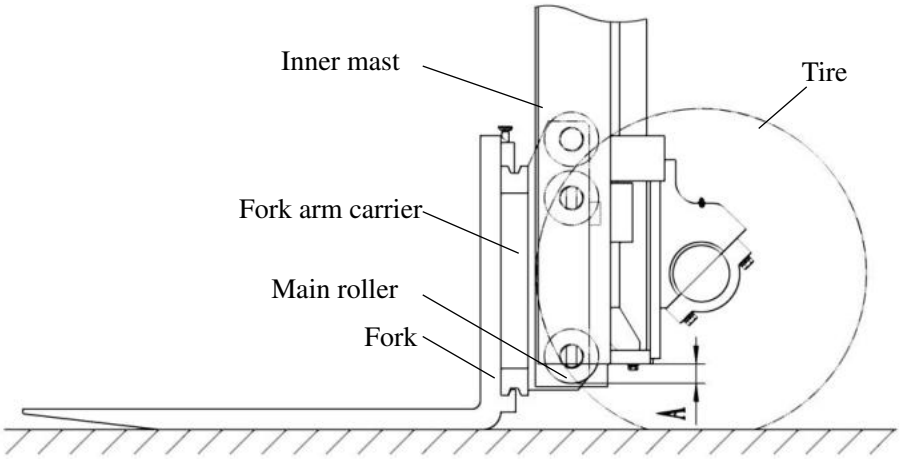


Figure 2-19 Fork arm carrier height adjustment

(3) Land the fork and lean back into position. Adjust the upper end connector of the chain and adjust the nut to make both chains tensioned to the same degree.

7.4.3 Replacement of fork armcarrier roller

(1) Fork a pallet and park the car on a level ground.
(2) Drop the fork and pallet to the ground.
(3) Remove the upper end connector of the chain and remove the chain from the sprocket
(4) Lift the inner mast (①in Figure 2-37).
(5) After confirming that the fork is removed from the outer mast, reverse the forklift (② in Figure 2-38).
(6) Replace the main roller
  (a) Remove all spring retainers and remove the main roller with the drawing tool, taking care to keep the adjusting pad.
  (b) Confirm that the new roller is the same as the replaced roller, install the new roller into the cargo fork rack and clamp it with the elastic retainer.

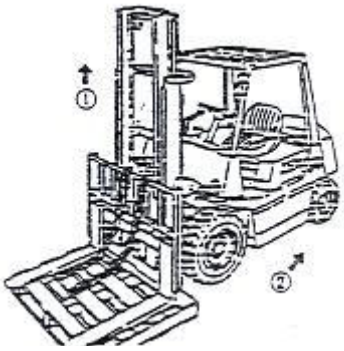


Figure 2-20

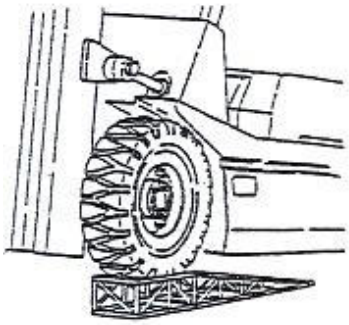

Figure 2-21

7.4.4 Replacement of mast roller

(1) Remove the fork rack from the inner mast in the same way as described in 9.5.3 replacement fork Rack Roller.
(2) Drive the forklift to the level ground, and put the front wheel up 250-300mm.
(3) Pull the overhand brake and pad the rear wheel with the wedge.
(4) Remove the lifting cylinder and the fixing bolts of the inner mast. Lift the inner mast, taking care not to lose the adjustment pad for the piston rod head.

(5) Remove the connection bolt between the lifting cylinder and the bottom of the outer mast, remove the lifting cylinder and the oil pipe between the two cylinders, do not loosen the oil pipe joint.
(6) Put down the inner mast and remove the main roller at the bottom of the inner mast. The main roller of the outer gantry will also be exposed from the top of the inner mast.
(7) Replace the main roller.
   a) Remove the upper main roller with the drawing tool without losing the adjustment pad.
   b) Install the new roller with the adjustment pad removed in step (a).
(8) Lift the inner mast until all rollers enter the mast.
(9) Install the lifting cylinder and fork rack according to the opposite steps of disassembly.

7.5 Installation instructions for attachments

⚠ **If you need to install attachments, please contact our sales department, do not install by yourself.**

## 8. Removal and installation

8.1 Notice

(1) Only qualified operators can disassemble or repair the parts on the vehicle.
(2) Stop the vehicle on the flat ground and wedge the wheel before starting the disassembly and detection operation, otherwise it will cause the vehicle to move accidentally. Meanwhile, place the main switch in the off position and disconnect the battery plug.
(3) Remove all rings, watches and other metal items from your body before starting the disassembly and detection operation to avoid accidental short circuit.
(4) Please use the correct tools in the disassembly process, if required, please use the special tools marked.
(5) Please choose the appropriate spreader according to the size and weight of the parts to be removed to avoid danger.
(6) Before lifting, please be sure to install the sling securely to avoid slipping. Keep the sling tensioned during lifting.
(7) When removing a heavy part from the car, be careful not to lose its balance and break it.

8.1 Description of lifting points of each disassembled component

(1) Figure 2-22 shows the lifting system

Maximum weight (excluding accessories) is not more than 2500Kg

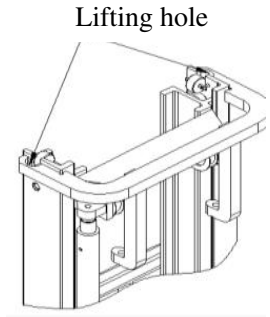


Figure 2-22

(2) Figure 2-23 shows how to lift the top shelf

The maximum weight is not more than 150Kg

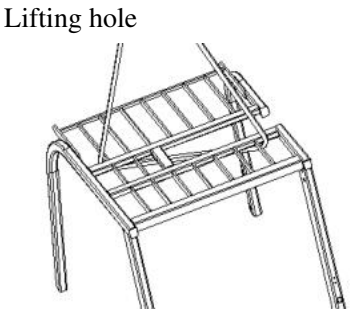


Figure 2-23

(3) Figure 2-24 shows the balanced lifting

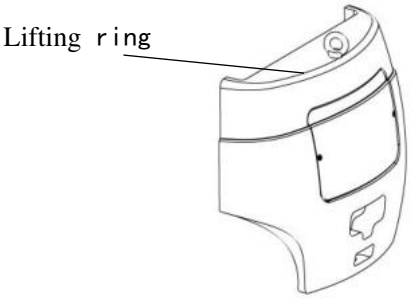


Figure 2-24

The maximum weight is not more than 1500Kg.

⚠ **The lifting ring on the balance weight is only allowed to lift the balance weight, not the whole vehicle.**

(4) Figure 2-25 shows how to lift a battery box.

For battery weight, see battery nameplate.

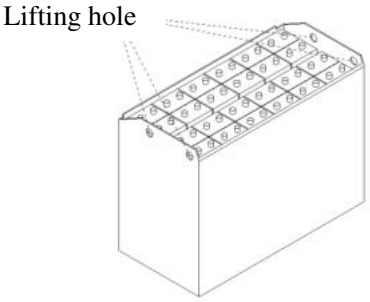


Figure 2-25

⚠ **The battery also has the performance of balancing weight. Users are not allowed to replace the battery at will, otherwise it will affect the balance of the whole machine and other performance.**

(5) Figure 2-26 shows the lifting of the walking motor.

The maximum weight is not more than 150Kg

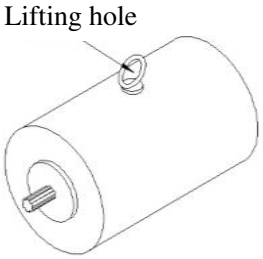


Figure 2-26

# Chapter Three Operation, use and safety for forklift

## Ⅰ.Driving and operation

There is some information for operating normally as below and it favor you about good running performance, using safely, running economically.

**1. Usage of new vehicle**

**⚠·All of the parking parts from the new vehicle should be reclaimed according to the establishment of local government.**

**·In order to ensure the new vehicle can work normally, Make a trial run of it before use it.**

The life-span of vehicle depends on how you begin to use your new forklift. At initial 200 hours running, please to notice as follow.

**⚠·Whatever season, you have to run machine warmly before operating.**

**·Do maintenance better in normally.**

**·Do not abuse machine and unreason using.**

**2. Connection between load and stability**

Under load curve, forklift take front wheel for pivot to keep balance of vehicle and load on fork, please pay attention to load centre and load capacity to keep vehicle stable.

**· If exceed load curve, rear wheel should be uplifted and be in danger, forklift should be overturned to lead severe injury. Saying as below figure, load close to fork prong is the same effect as increase weight. As in such condition, load shall be decrease.**

**3. Load center and load curve**

Load centre means the distance between front end surface of fork and cargo cg. Said figure of load curve show you relation of 2t forklift load centre and permitted load. figure of load curve is adhibited on vehicle, if figure damaged, to renew it in time.

**·If forklift is equipped disposal accessaries such as side-move device, scraper bucket or rotating fork, its permitted load is less than normal truck(no any accessaries), the reason as follow:**

**(1) Subtract load from rated load, its weight equal to weight of accessaries.**

**(2) Because accessaries length lead load centre to move forward, rated load is also decrease.**

**Accessaries equipped lead load centre moving forward, this phenomena is called "Load centre loss".**

**Do not load exceeding the rated load shown by figure of load curve pasted on vehicle or accessaries.**

**4. Forklift stability**

There are regulations in ISO or other standard about forklift stability, but said regulation is not applicable for all of running condition, forklift stability vary on different running condition.

Maximum stability is assured under below condition:

(1) Level and firm ground.

(2) Running under standard load or unloaded condition.

Standard no-load state: Fork or other bearing accessaries lie 30cm up to ground, tilting mast backward enough without load.

Standard load condition: Fork or other loading accessaries lift up about 30cm from ground, rated load on standard load centre, mast tilting backward to max angle.

**·When loading, keep min. tilting angle forward or backward as can as possible, do not tilting forward unless load fixed on load backrest or rigidity loading goods frame, or low lift**

**height.**

**5. Transporting and loading for forklift**

(1) Transportation of forklift

**·Transporting with truck, Wedge forklift wheel or tighten forklift by rope to prevent it moving during transportation.**

**·Pay attention to obey regulation of full-length, full-width, full-height of forklift during transportation on traffic road.**

(2) Loading and unloading for forklift

**·Please use gangplank with enough length, width and intensity.**

**·Brake lorry firmly and wedge wheel.**

**·Gangplank shall be fixed on middle of carriage firmly, no grease on gangplank.**

**·Both height of left and right gangplank shall be same.**

**·Do not turn or transverse move during operating on gangplank.**

**·When loading on lorry, in order to let forklift board on simultaneously, please backing lorry slowly.**

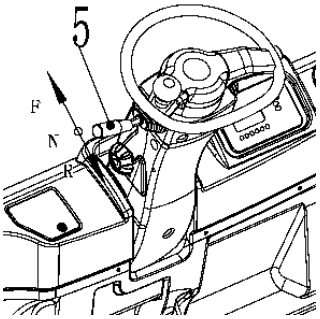


**6. Preparation before driving**

(1) Check position of direction switch handle⑤, and push it to neutral position(N).

(2) Turn on ignition key

Catch hold of handle of steering wheel, then turn on ignition key and keep it at “ON” position.

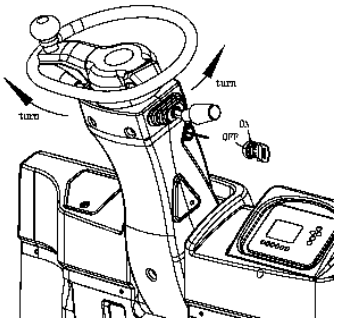


**·Even after ignition key is turned to “ON” position, 1 second is needed between brake circuit starting to work and starting to move.**

**·If gear shift lever is in forward position “F” or backward position “R”, before turn ignition key to “on” position, push gear shift lever to neutral position “N”**

**·Do notice that if step down accelerating paddle suddenly, vehicle will probably accelerate suddenly.**

(3) Tilting backward of mast

Pull backward lifting handle to lift fork 150-200mm up to ground, and pull backward tilting handle to tilt mast backward.

(4) Operation of direction switch handle⑤

Direction switch handle decide travelling direction（forward-backward）

Forward F: push forward direction switch handle

Backward R: pull backward direction switch handle

(5) Loosen parking brake handle

Step down brake paddle

Let go parking brake handle forward entirely, catch hold of steering wheel with left hand, put right hand lightly on steering wheel too.

**7. Steer**

(1) Starting up

Move food away from brake paddle and step down accelerating paddle slowly, then, the vehicle will start to move.

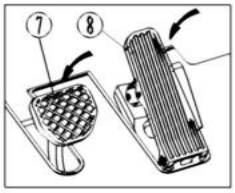


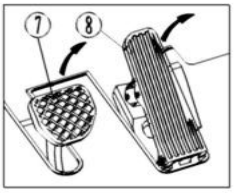


Acceleration rate is decided by how much

accelerating paddle is stepped down.

⚠ **·Do not startup or brake suddenly to prevent cargo falling down .**

(2) Speed slow down

Release accelerator slowly. If necessary, step brake pedal down. Except emergency brake, release accelerator to make slow down slowly until parking. If even release accelerator suddenly, emergency brake is also impossible. When emergency situation, step brake pedal down to make emergency brake.

⚠ **·Please slow down if situation as follow:**

**(a) urning at crossing.**
**(b) Closing to cargo or pallet.**
**(c) Closing to goods pile.**
**(d) Traveling through narrow channel.**
**(e) Ground/Road surface is bad.**

**· When backing forklift you have to look at rear direction to be sure condition is safe. It is dangerous when backing forklift depending only on rearview mirror.**

(3) Turning

It is not same as car, forklift depend on rear wheel to turn. When turning you shall be slow down and be careful for tail swing of forklift when operating steering wheel.

⚠ **·During turning, when turning radius is small, the fast speed the forklift is, the more possibility the forklift overturn. Be careful for this situation.**

(4) Traveling and lifting simultaneously (Inching operation)

(a) Traveling first, let fork prong be close to goods about 3—5m distance.
(b) Step brake pedal down perfectly.(standstill)
(c) Step accelerator down to be in optimum speed.
(d) Operating lift and lowering handle to operate fork to be lifting operation.

⚠ **· Traveling and lifting simultaneously (Inching operation) is a professional work to ask for skilled operator. Be definite to know well the shape and cg of goods to identify the vehicle stability, make a slow lifting and lowering performance of the vehicle, and please be careful in operation.**

**·Tilting fork to operate when fork is at a much height is very dangerous , except for fork's in and out operation , please do not operate the vehicle on the load stage.**

·In order to reduce the danger of tilting fork to operate when fork is at a much height, make lifting operation when the vehicle is very close to load stage.

**8. Parking and temporary parking**

⚠ **·Parking safely**

**·Parking place shall be broad and level as much as possible.**

**·When unladed forklift have to park on ramp, please make mast face downward and block wheel by wedge.**

**·Parking vehicle outside workplace or qualified place.**

**·If necessary, to use signs or signal light.**

**·Parking on firm and level ground.**

**·If fork can not lower because of fault, hang cloth on fork prong forward dead corner.**

**·Pay attention for road surface slide or cave in.**

**·To lower fork after parking perfectly, it is very dangerous to lower fork during traveling.**

**·Do not jump off vehicle.**

**·When get off forklift, you have to face vehicle and take favour of footboard.**

**·Slow down first and step brake pedal down and standstill and put gearshift on "N".**

**·Parking vehicle at place where is convenient to other vehicle and operating as follow:**

(a) Pull backward the parking brake handle enough to its position, actuate the parking brake.

(b) Let fork lower to make it touch ground.

(c) Turn ignition key to "off" position.

(d) Take off key and keep it carefully.

(e) Be careful to get on or get off vehicle.

(f) Parking forklift

**·When get off forklift, pull brake handle up and to tilt mast forward. Lower fork on ground. When parking on ramp, block forklift by wedge.**

**·When leaving forklift, take ignition key**

**9. Usage of battery**

(1) Charging battery

To choose right charger according to instruction of operating manual.

(a) Keep liquid on normal level.

⚠ **·Keep liquid level on normal situation to prevent battery from being over-hot or being burn out.**

**·If electrolyte is not enough, the life-span of battery will be shorten**

(b) Infuse distill water.

(c) Do not overcharge.

(d) Charging place shall be ventilated enough.

⚠ **·Battery charging shall be at ventilated and dry place.**

(e) Open battery cover.

⚠ **·There is hydrogen to be generated when charging, so and please open battery cover.**

(f) Check terminal, cable and connector.

⚠ **·Before charging, check connector and cable to ensure there is no injury**

**·Not charging under the situations as follow:**

**—Connector terminal has been injured.**

**—There are rust and abrasion in Terminal and cable.**

**These situations will lead spark to burn and to explode.**

(g) Charge after turning off ignition key.

(h) Check proportion

Before charging, check each cell for electrolyte proportion to detect for abnormal condition to prevent certain accident happen.

(i) When pulling out or insert power connector, hold connector or handle not the cable.

⚠ **·Do not pull out cable.**

**·If cable and connector failure, please inform manufacturer to replace by new one.**

(j) Break up charging procedure

⚠ **·According to 《operation and maintenance manual》of the used charger to break charging procedure.**

**·Do not pull out charger plug during charging, otherwise there will be spark take place to lead to danger.**

(2) Replace battery

When forklift has been used continuously for a working period and the battery has entirely excharged, replace the battery with another fully charged one and charge the battery been replaced.

⚠ **·In replacing, to be sure that new battery mates with forklift well, otherwise there will be dangerous to shorten lifespan of forklift or overturn during traveling.**

**·Replacement of battery shall be done on level table.**

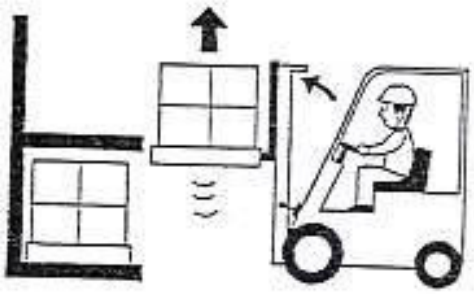

According to the steps as below to replace battery:

⚠ **·When using another forklift as hoisting equipment to lift battery, you shall choose a proper lifting tool(accessary).**

**·Only qualified person can operate battery.**

(a) Pull out plug of battery.

(b) Open upper cover of battery.

Use gas spring or other methods to ensure block upper cover of battery to avoid cover fall down to injure human or bodywork.

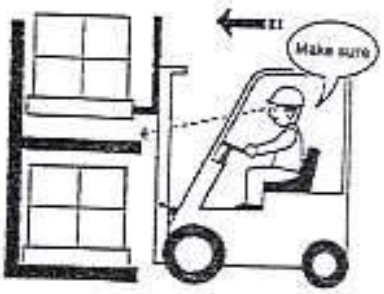


(c) When hoisting battery out forklift, be careful for touching steering wheel or other forklift parts.

(d) After finish installation of battery, connect and fasten the battery pin.

(e) Close upper cover of battery.

⚠ **· When close upper cover of battery, be careful to injure your finger.**

**·During hoisting battery, be careful to prevent swing of battery box to injure bodywork.**

**10. Stacking**

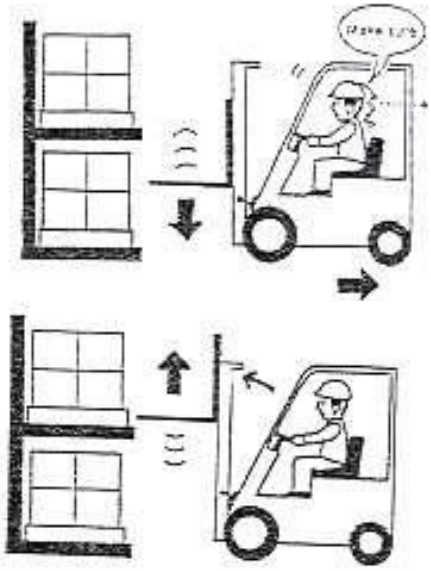

⚠ **·Check the following items before operation:**

**(a) Be sure that there are no falling of load and damaging of load in loading region.**

**(b) Be sure that there is no goods or pile possible leading to unsafety**

Stack as follows:

(1) Slow down when getting close to goods.

(2) Parking in front of goods.

(3) Check the safety of goods area.

(4) Adjust the position of vehicle until it lies in front of goods

(5) Make Mast vertically , lift fork up more than the height of goods.

(6) Check goods location and park the vehicle to optimum position.

(7) Ensure that the load higher than the stacked goods and lower fork slowly and place load correctly and safely.

**·Before load placed on shelves or bracket:**

**(a) Lower load until fork no longer carry any load.**

**(b) Backing forklift for distance of 1／4 length of fork.**

**(c) Lift fork 50—100mm up and drive forklift forward for stacking to be optimum.**

(8) Look at rear space, backing forklift in order to avoid impact between fork and pallet or goods.

(9) Ensure fork prong to be off goods or pallet, lower fork to avail driving.(from ground 150—200mm)

**11. Unstacking**

Unstack referring to the procedure as below

(1) Slow down when close to goods.

(2) Park in front of goods(30cm between goods and fork prong)

(3) Adjust the vehicle position in front of goods

(4) Be sure that there is no overloading.

(5) Adjust the Mast upright to ground.

(6) Observe the vehicle position and move it forward until the fork inserts the pallet completely

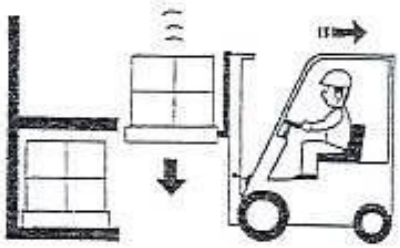

**·When it is difficult to insert the fork completely into pallet:**

**(a) Inserting 3／4 length of fork and lift pallet little more (50－100mm), then pull fork out pallet 100-200mm, then lower pallet.**

**(b) Insert fork into pallet completely.**

(7) After fork insert pallet, lift pallet (50-100mm) up.

(8) Look at ambient spacy to move forklift backward to lower load.

(9) Lower load at the height of 150-200mm from ground.

(10) Tilt backward the mast to ensure the stability of goods.

(11) Transport the goods to destination

**12 Deposit**

(1) Before deposit

Before forklift deposits, clean it thoroughly, check up as following:

(a) If necessary, clean grease and oil of bodywork by cloth and water.

(b) When cleaning, check the vehicle entirely especially for hollow or damage of bodywork, if tyres punctured, and if there is any nail or stone in tire surface groove.

(c) Check for leakage.

(d) If necessary, infuse grease.

(e) Check wheel hub nut and joint face between piston rod and piston for loose, check piston rod surface for injury.

(f) Check mast roller for rotation stability.

(g) Actuate lift cylinder to its max. height to let cylinder be full of liquid.

**·As long as there is any failure or malfunction or unsafe factor of forklift to be known, report to related person and stop using forklift until repaired.**

(2) Daily deposit

(a) Parking forklift on appointed place and block wheel by wedge.

(b) Put shift gear on neutral and actuate parking brake.

(c) Take off ignition key and keep it in safe area.

(3) Long time deposit.

Based on daily deposit, please make check and maintenance according to the follow items.

(a) Considering the raining season, park the vehicle on high and rigid ground.

(b) Unload battery from forklift. Even indoor parking, if the place is muggy, dry and shade-cool are necessary for the battery depositing. Charge the battery once a month.

(c) Rub anticorrosive oil on bared surface of piston rod and shaft etc.

(d) Cover parts prevent raining and wet.

(e) Startup vehicle at least once a month, install battery, clean the grease on piston and shaft, startup engine and preheating, make vehicle move forward and backward slowly, meanwhile operating hydraulic control for several times.

(f) In summer, do not park forklift on floppy surface such as asphalt ground.

(4) Operation after long time deposit.

(a) Take off dampproof cover.

(b) Cleaning pickling oil from bared parts.

(c) Cleaning impurity and water of hydraulic tank.

(d) Install full charged battery on forklift and connect it.

(e) Check carefully before startup.

## Ⅱ.Using instruction of operating devices

**1. Components, schematic diagram for operating devices（see following figure）**

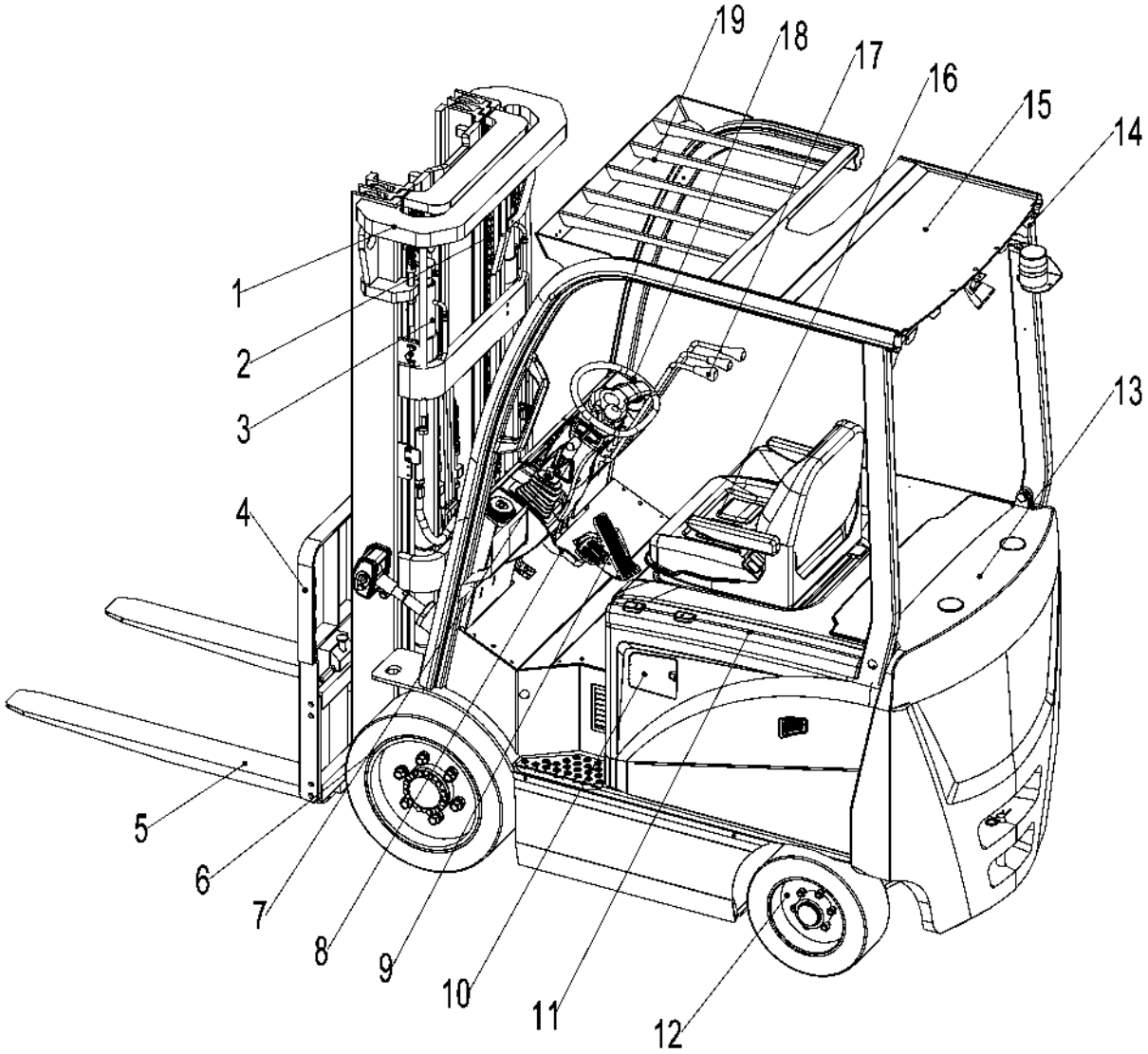


| | | |
|---|---|---|
| 1.mast | 2. lifting oil cylinder | 3. Lifting chain |
| 4. load-backrest | 5.fork | 6.front wheel |
| 7. parking braking | 8. service braking sytem | 9. accelerator |
| 10. charge Jack | 11.hood | 12.real wheel |
| 13. counterweight | 14.rear combination lamp | 15. overhead guard |
| 16.seat | 17. operating lever | 18. steering wheel |
| 19. Headlights and turn signals | | |

**2. Instrument unit**

see figure 2.4 Electrical system（ page 30）。

**3. Switches**

（1）Emergency stop button

When emergency, press red mushroom-head button down to cut off power to stop function of traveling, turning, lifting. To resume the function, rotate the button according to the arrowhead indication.

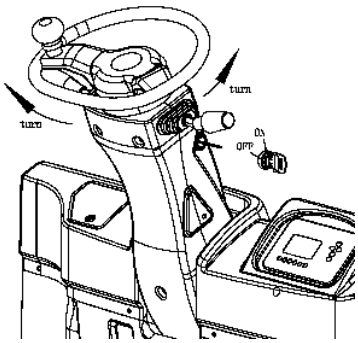


Emergency switch

(2)Key switch

key can turn on or turn off controlling power

Turn off (0FF): In this position, power is cut off and key can be inserted and pulled out

Turn on (0N): Turn forward from off position, switch is turned on, forklift starts up.

⚠ **·Do not turn on ignition key and step accelerator down simultaneously.**

**·Take off key to prevent unqualified operating when get off forklift.**

**·Take off key when charging or parking to prevent unqualified operating.**

（3）Switch unit

Switch unit is combined by direction switch, steering switch and big and small light switch.

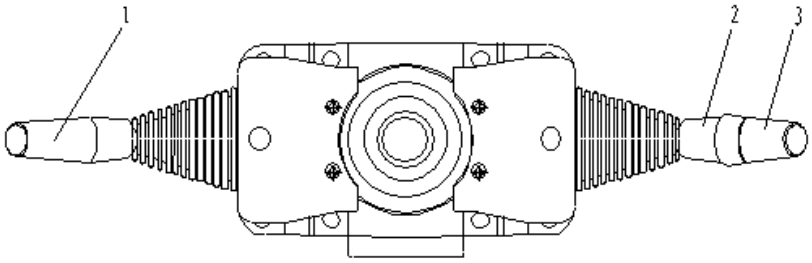


1- direction switch 2- steering switch 3- big and small light switch

Direction switch controls travelling direction and delivers signal to instrument to display. Push handle forward, vehicle travel forward, and pull handle backward, vehicle travel backward. Neutral position is vacancy. When handle is on backward, back-up light and caution light will open, back buzzer has sound.

Steering list shows rotation direction of forklift, when handle is on turning position, steering light will blink.

| | |
|---|---|
| push forward | left steering light is bright |
| middle | neutral |
| pull backward | right steering light is bright |

Big and small lights switch control relevant lights. Small light will open when rotate to the first gear, both big and small lights will open when rotate to the second gear.

| gear / light | OFF | first gear | second gear |
|---|---|---|---|
| width light | × | ○ | ○ |
| tail light | × | ○ | ○ |
| fore light | × | × | ○ |

○: lightening ×: blanking

（4）Rear big light switch

Tail light switch is a single gear which controls on & off of the light. Pull switch up, light open; push down, light off.

**4. Control**

(1) Steering wheel① and steering wheel handlebar②

Steering wheel operation is traditional: steering wheel turn right, vehicle move right; steering wheel turn left, vehicle move left. There is steering wheel at backside of forklift to make backside of forklift swing toward outside when turning.

When turning, catch steering wheel by left hand and right hand on steering wheel or control handle of multiway valve.

Both hydraulic steering system and steering wheel tilting device are standard equipment of forklift.

**·According to driver seat to adjust steering wheel to optimum angle.**

**·Lock steering pipe by tilting handle after adjusting steering wheel tilting angle.**

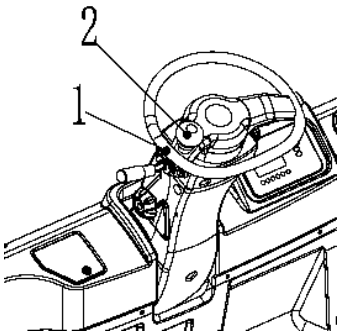


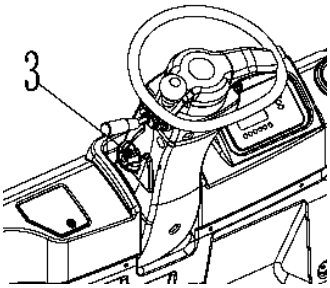


(2) Horn button④

Push down rubber cover located in the center of steering wheel to make a buzzing sound. Even when ignition key is turned off, the horn can also sound.

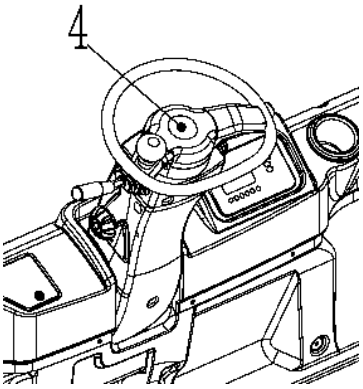


(3) Direction switch handle⑤

Indicate travelling direction

Travel forward (F): Push forward handle and step down accelerating paddle

Travel backward (R): Pull backward handle and step down accelerating paddle

When parking forklift, direction switch handle should be put in neutral position(N).

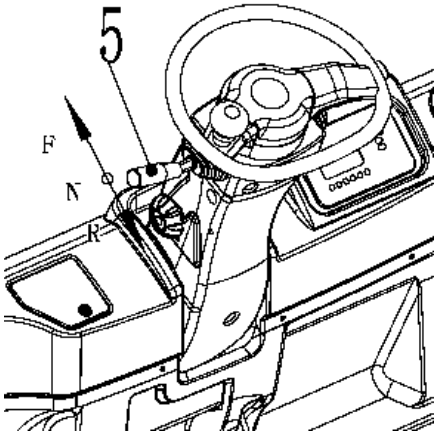


(4) Parking brake handle⑥

In order to prevent forklift from moving, when park forklift, pull up entirely parking brake handle.

It is necessary to push parking brake handle to end before driving.

⚠ **·When operating the parking brake handle, step down the parking paddle.**

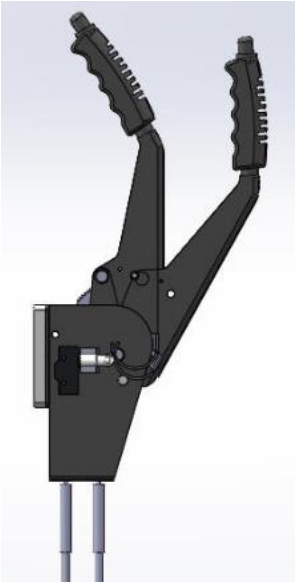

(5) Brake paddle⑦ and accelerating paddle⑧

⚠ **·Do not step accelerator pedal suddenly to prevent the vehicle from starting or accelerating suddenly.**

**·Ensure your foot remove from accelerator pedal when step brake pedal down.**

From left to right, there are brake paddle⑦ and accelerating paddle⑧ in turn.

Step down accelerating paddle slowly, forklift speed is decided by stepped angle of accelerating paddle.

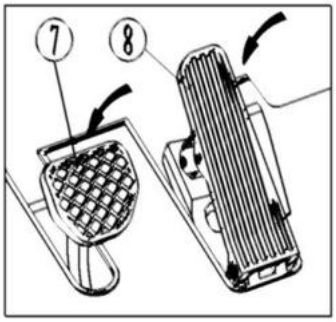

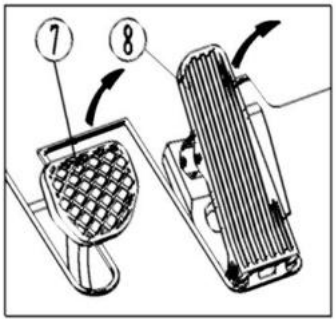

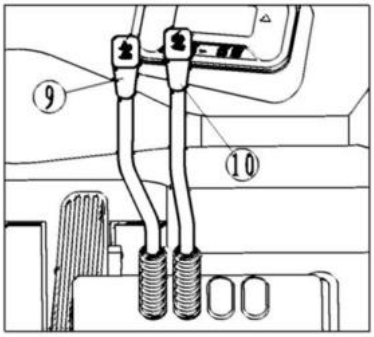


(6) Lifting handle⑨

Pull backward lifting handle, fork lifts, and push forward lifting handle, fork lowers. Lifting and lowering speed depend on tilting angle of handle, the larger the angle, the faster the speed is.

⚠ **·Lifting operation can't be made, if push or pull lifting handle when turn on ignition key.**

**·Don't lower fork suddenly or stop suddenly when lowering fork.**

(7) Tilting handle⑩

Pull backward tilting handle, mast tilts backward; push forward tilting handle, mast tilts forward. Tilting speed is decided by tilting angle of handle, the larger the angle is, the faster the speed is.

⚠ **·When turn ignition key on, push or pull tilting handle, you can not tilt mast.**

**5. Truck body**

(1) Seat

Make you fit to drive seat by adjust operating handle.

Lock will be released after pull the handle up. you can move seat to and fro gently. To be sure seat locked after adjusting.

Seat adjusting range To and fro is 120mm. When traveling on dry cement road, driver is given a perpendicular acceleration as blow:

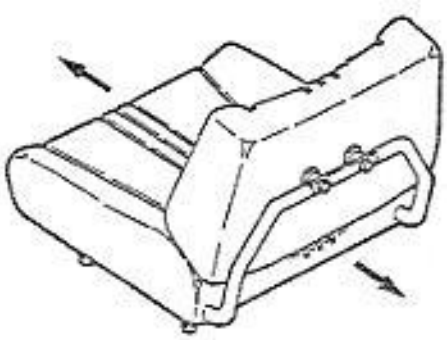

(2) Roof guard

⚠ **·Roof guard protect you from falling down of goods. Its top is a fence-type shape, the space between two bars is 150mm, so, if goods size is less than 150×150mm, you have to adopt another measure to protect yourself from danger of falling down of weights. Abnormal installation of roof guard or no roof guard or changing roof guard shall lead terrible accident.**

(3) Goods rest

⚠ **·Goods rest is an important device to protect operator from being impacted when cargo slides toward operator. Loose installation, usage after dismantling and usage after modification are all dangerous.**

(4) Traction rod

Only in the following situation shall be possible to use traction rod.

·To escape from the trouble of being not able to travel(for example wheel trapped in ditch)

·Forklift need to be loaded on or be unloaded from lorry.

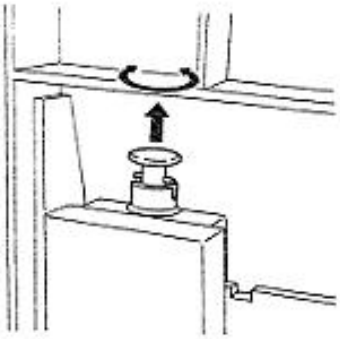

⚠ **·No using for towing or to be towed operation absolutely.**

(5) Fitting pin for fork

Fork fitting pin lock fork on certain position. When need to regulate clearance of fork, pull pin out up, rotate pin l / 4 circle to make fork at position required. Regulation of clearance of fork depend on goods need to be loaded .

⚠ **·According to principle of goods gravity centre shall be on centre of vehicle, we have to regulate space of forks for equal distance either left and right. after regulated, to fixup fork by fitting pin firmly.**

**· When adjust space of fork, lean against your body on goods rest, after standing stably, push fork by your foot. Do not regulate by your hands absolutely.**

(6) Foot pedal and armrest

There are foot pedal on each side of forklift, armrest located on left front brace of roof grard, when get on or get off, please use foot pedal and armrest to ensure your safety.

(7) Lamps

There are head light and front light assembled on the head of vehicle direction indicator lamp, parking light, width light). Also there are back light assembled on backside of vehicle which consists of tail light, turning light, brake light, parking light, back light and flasher.

⚠ **·Identify the working status of lamps,**

**Replace and repair lamps immediately if lamp burning out, lamp shield injury or dirty.**

(8) Rear view mirror

Rear view mirror locates in right of roofguard front beam.

⚠ **·Keep rearview mirror surface cleanness.**

**·Regulate rearview mirror for good position in favor of good sight of driver.**

(9) Battery plug

Battery plug is used to join or cut off power, in normal situation, it should always be connected.

⚠ **·If checking electrical parts of inside location, please cut off power to prevent danger.**

**·Even if ignition key on “0FF”, main circuit Still has voltage. if you want to switch off power, it is necessary to pull out this connector.**

**·Do not pull out plug of battery during Driving unless emergency, because it can lead steering malfunction.**

## Ⅲ. Safety issues

Safety is your business and responsibility. This section describes the typical forklift often used in the basic safety regulations and warnings, but also applies to the mast with special specifications.

### 1. Operation place and working environment

(1) Ground conditions

The operation place of forklift should be ground with flat and firm surface, a good ventilation is needed.

Forklift's performance depends on the situation of the ground; running speed should be adjusted appropriately in ramps or rough pavement to be especially careful when driving. Driving on a ramp or rough roads will speed up the forklift tire wear and increased noise.

(2) Work environment

Forklift use ambient temperature should be 5 °C ~ 40 °C, the ambient humidity should less than 80%.

(3) Weather condition

When it’s rainy, snowy, foggy or windy, to assess the safety before use forklift, the best is not to use for out door work, if must, driving and operation should be more carefully.

### 2. Safety rules

Only qualified people who has been trained and has driver license can operate the forklift!

Forbid to drive on the highway!

Vigilant: injuries, the ambulance!

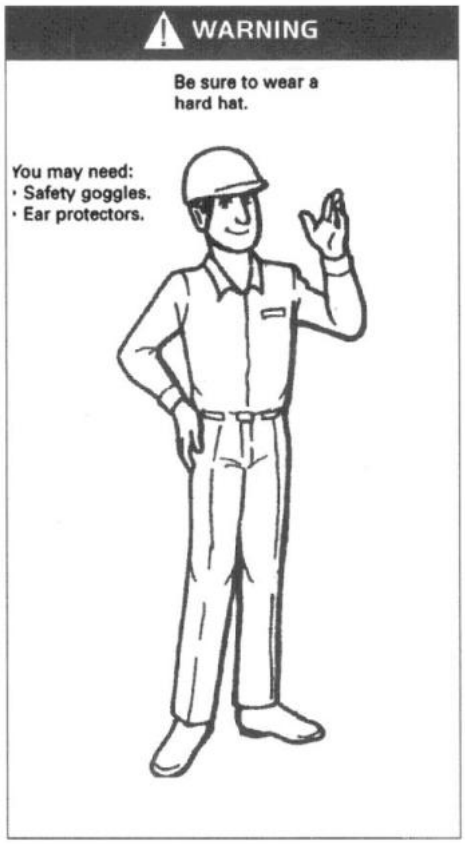

Do not change parts on forklift arbitrary without permission.

Read the instruction manual carefully before driving!

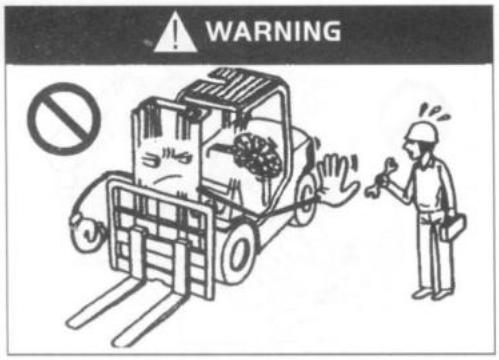


Turn off the engine before maintenance!

Understand traffic regulations

Before use, please check on the truck!

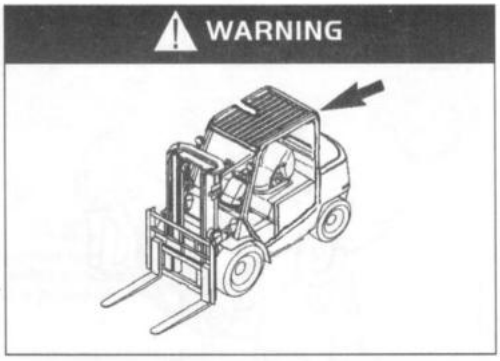


Do not move the overhead guard!

To keep driver's cap clean!

Do not drive an unsafe forklift!

Drivers should have a healthy body!

Be sure your truck is safe!

Work in specified area

Do not drive a damaged truck!

Hold tightly when get on the truck!

Start forklift correctly!

Adjust seat before driving!

Make sure your forklift is in safe operating condition!

Appropriate fasten seat belts!

Always pay attention to the height of work place!

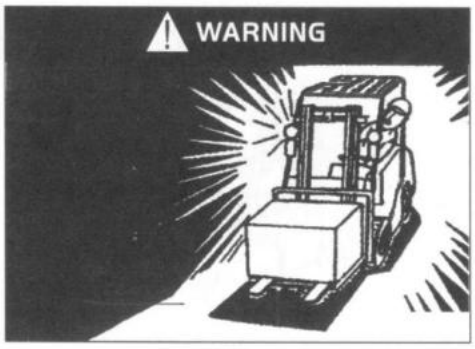


Turn on lights in dark area!

Do not put arm and body outside of the overhead guard during work!

Avoid driving on soft ground, only allowed to run on solid and flat ground.

Keep body under the guards!

Avoid eccentric loading!

Pay attention to encounter item by front fork when loading!

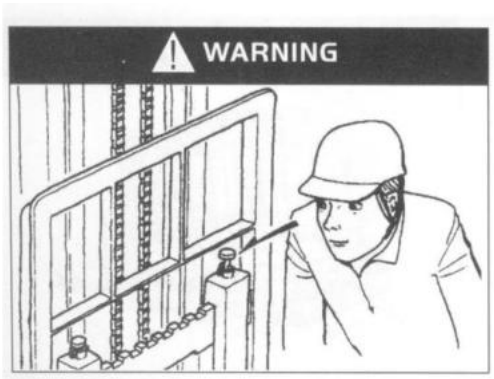


Check fork pin position!

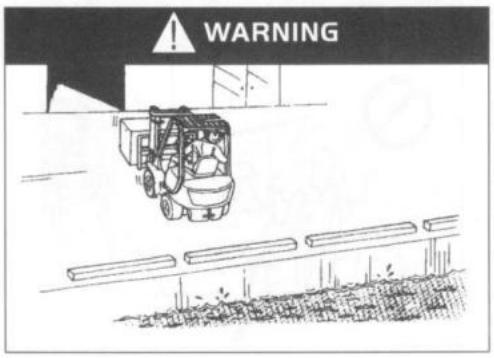


Note the security of the work region!

Do not run on smooth or slippery ground!

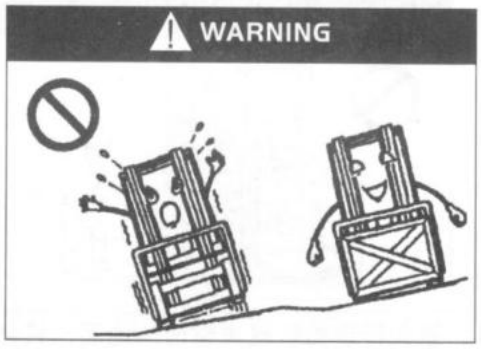


Note the horizontal driving stability of the truck when it is un-load!

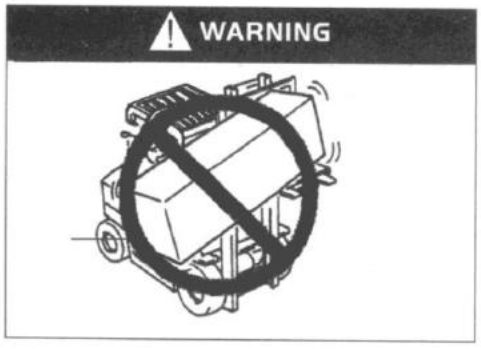


Be especially careful when handling long

Forbid handling people!

or wide cargo!

If can not see the front when turning, please whistle and drive slowly.

Use appropriate pallets or sleeper when handling small objects!

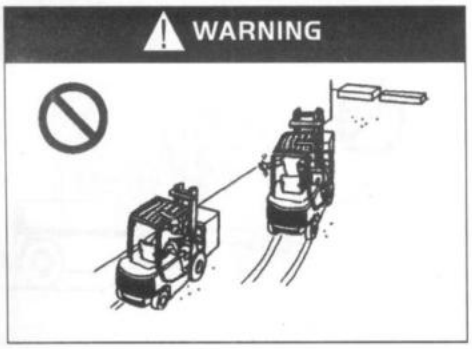


Do not chase each other through the traffic!

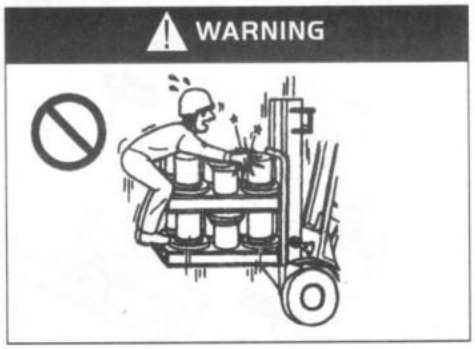


Not allowed to stand on the goods!

Not allowed to gaze around while driving!

Do not use the forklift to do stunt!

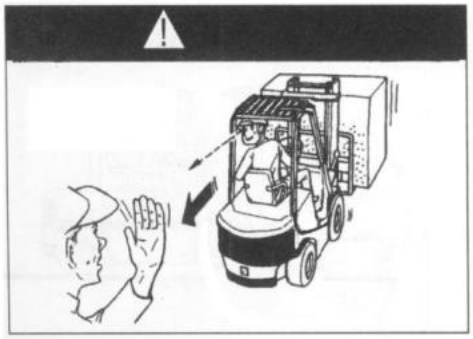

when goods is so high to keep out line of sight, drive backward or forward under

Should obey the traffic rules and all warnings and signs!

direction of others

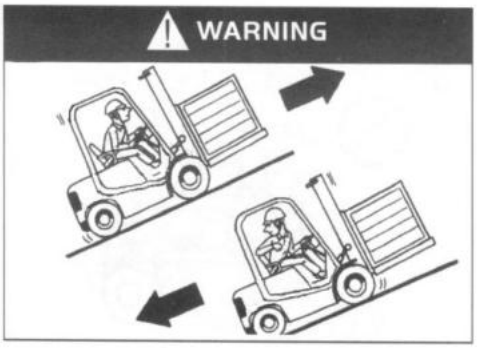


when loading, travel forward in upgrade and backward in downgrade

Pay attention to the steep uphill slopes and goods lifting height!

When no-load, travel backward in upgrade and travel forward in downgrade!

Note using brake when start truck on the slopes!

Not turn when driving on a slope!

People or things moving on road should be warned by whistle!

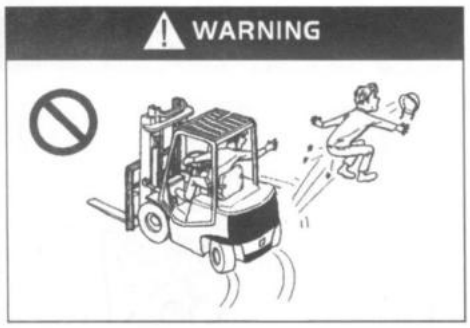


Be careful to crush people or goods when turning!

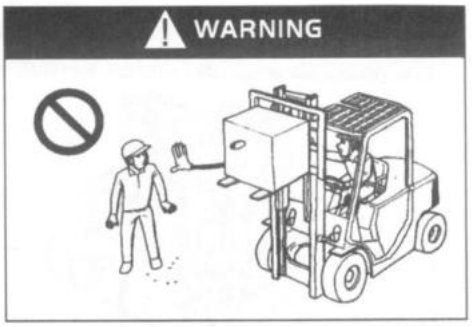


Operators are not allowed to close when the truck is working!

While turning a high speed can cause accident because of unstable center of gravity!

People are not allowed to start in work place!

Notice the change of rated load weight before use forklift.

Pay attention to the area where forklift is driven!

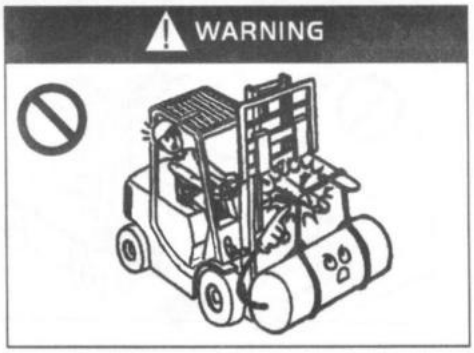


Use the fork correctly when loading!

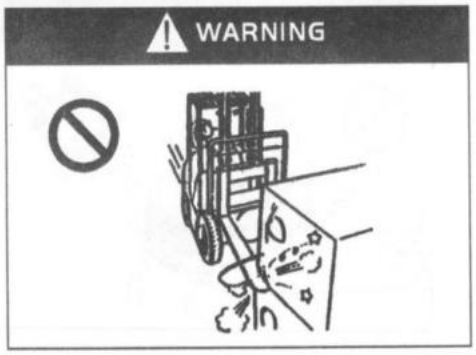


Slow down when loading!

Do not move the truck when there is

It is forbidden to stand or walk under

someone in front of the truck!

the elevatory fork!

Do not load the goods which is higher than the goods rest.

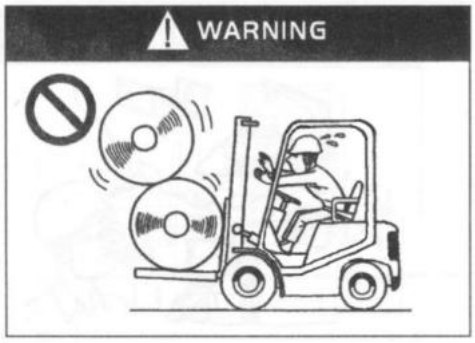


Please bind the goods which is difficult to fix before load!

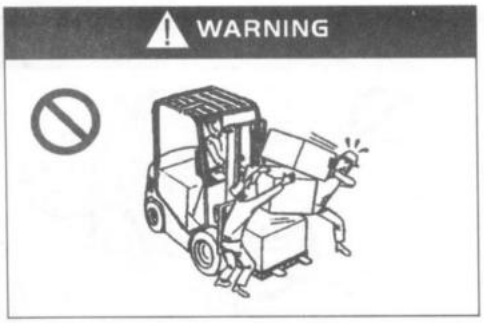


Do not carry the goods from forklift by manpower!

Do not let people to carry the goods have been damaged!

Do not misuse the fork!

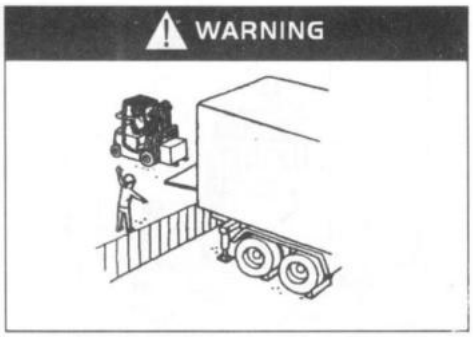


Be careful when load the container!

Do not pick up people!

Do not misuse forklift!

Do not extend any part of body outside when driving!

Drive the truck smoothly to avoid sudden acceleration and deceleration!

Must use special equipment to lift people safely to lift people safely to work at height!

Do not overload!

Do not lift when there is excessive wind!

Not allowed to work in explosive environments!

The faulty trucks should be put into the indicated area!

park the forklift to the indicated area!

Do not park the forklift on the slope!

When the forklift is not in use, please do the follow.
— Brake
— Put direction pole in neutral position.
— Lower the fork to the ground
— Frame forward tilt.
— Take off the key

**3. Move the truck**

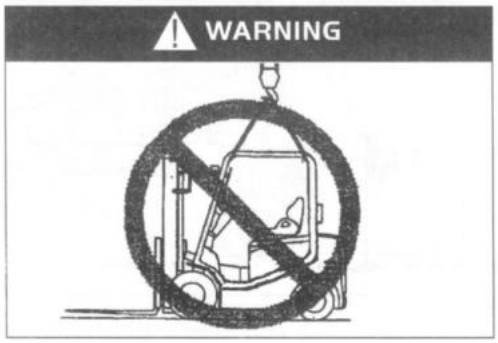


Forbid hoisting from the top!

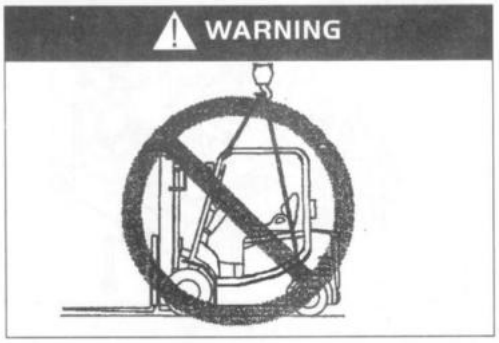


Forbid hoisting on the frame!

Hoisting the forklift correctly!

**Hoisting the forklift**

·Tie firmly steel cable on two terminal holes of outer mast beam and on counterweight hoisting hook, then, hoist forklift with hoisting device. the side of steel cable connecting to counterweight should go through notch of roofguard without exerting pressure on roofguard.

⚠ **·When lifting the truck, be sure not to wire rope and overhead guard around together.**

**·Wire rope and lifting equipment to be very strong, enough to secure bearing fork lift, because the truck is extremely heavy.**

**·Do not use the cab (overhead guard) to hoist the forklift.**

**·Forklift upgrade, do not enter the truck underneath.**

**4. How to avoid overturning, how to protect yourself**

Prohibit forward tilt to enhance loading, so as to avoid tipping!

Prohibit lifting goods tipsily!

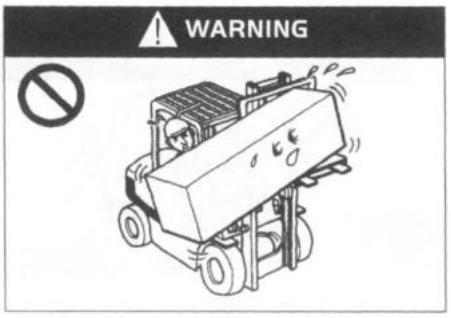


Prohibit eccentric loading of goods!

To avoid driving on slippery roads!

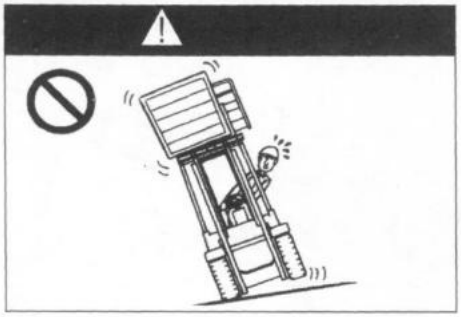

When the truck is not in the horizontal position, do not load or unload!

Prohibit crossing the obstacle such as trench, mound and railway!

When moving, the distance between fork and ground should less than 150mm to 200mm!

whether load or no-load, don't turn in a high speed or in a large radian!

when no-load fork is lifted, please turn with a narrow range.

Be sure to fasten seat belts!

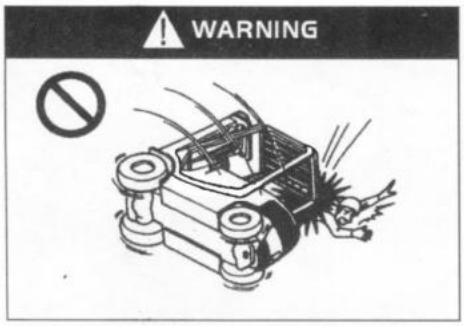


Do not jump in the event of forklift rollover!

Please wear helmets when driving!

⚠ **·It is more safe to stay under the protection of seat belt than jump down the truck. If the forklift began to tip over:**

1. **Tap foot and clench the steering wheel tightly.**
2. **Do not jump.**
3. **The body bend to the opposite direction of the rollover.**
4. **Forward the body.**

**5. Safety problem in Maintenance**

(1) Maintenance location

⚠ **·Designated areas should be available to service providers and adequate equipment and security facilities.**

**·The site should be level ground.**
**·The site should be well ventilated.**
**·The site should have fire-fighting equipment.**

(2) Precautions before maintenance

**·No smoking**

**·Wear all protective equipment (helmets, shoes, glasses, gloves and boots), and suitable clothing.**

**·Wipe out the oil in time.**

**·When add lubricating oil, you should clean out dirty oil or dust with a brush or cloth, then add oil.**

**·In addition to the needs of some cases, should turn off the key switch and pull the battery plug out.**

**·Lower the fork to ground when maintaining.**

**·Clean the electrical components with compressed air.**

(3) Matters need attention.

**·You should be careful not to put your feet under the descensive fork, do not be tripped over by fork.**

**·When fork is lifted, place cushion block or other object under inner mast to prevent fork and mast from falling down suddenly.**

**·You should be careful when you open and close the nose plate and cover plate of battery.**

**·When you can not finish your work in one time, please make mark and go on next time.**

**·Use the right tools, do not use makeshift tools.**

**·Because of high pressure hydraulic circuit, do not carry out maintenance work before reducing the internal pressure oil-way.**

**·When shocked by high-voltage, search for medical treatment immediately.**

**·Do not use the mast assembly as a ladder.**

**·Strictly forbidden to put your hands, feet and body between frame and mast assembly.**

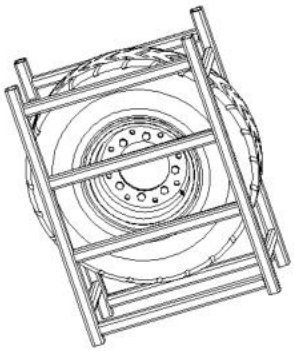

(4) Inspect and replace tires.

**·Assembly and disassembly of tires must be operated by professionals.**

**·High-pressure air should be carried by professional.**

**·Wear goggles when using the compressed air.**

**·When disassemble tires, do not loose rim junction bolts and nuts, there is high-pressure gas inside the tire, bolts, nuts and rims loose cause very dangerous situation.**

**·Junction disassembly rim bolts and nuts, the tire must be exhausted within the high pressure gas, and carried out special tools.**

(5) Use jack (replacement of tyres)

**·When lift the forklift truck with a jack, do not bore into the button of forklift.**

**· Before lift the forklift truck with a jack, ensure there is no person or load on the truck.**

**·When forklift is of ground, stop using jack and put pad under it to prevent it from falling down**

**·Before lift forklift with jack, affirm there is nobody and no load on it**

(6) Emission (electrolytic liquid, oil, etc.) requirement.

**·Forklift scrapped parts (plastic parts, electrical components, etc.), liquid (hydraulic oil, brake fluid, etc.) should be recycled according to local government stipulation, do not dispose them at will.**

**6. Safety problem in battery usage**

(1) No smoking

⚠ **·Batteries produce hydrogen gas. Short circuit will produce sparks when lit cigarette near the battery, it will cause an explosion and fire.**

(2) Avoid electrical attack

⚠ **·Battery with high voltage, when the installation and maintenance, do not touch the battery conductor, which can cause serious burns.**

(3) Correct link

⚠ **·When the battery charging, the positive and negative can not be reversed, otherwise it will cause heat, fire, smoke or explosion.**

(4) Do not put metal objects on the battery

⚠ **·Do not let positive and negative contacts cause a short circuit by bolts or tools, which will result in injuries and explosions.**

(5) Against excessive discharge

⚠ **·Do not use forklift until it can not move, otherwise the battery life will be shortened. The batteries need charging up when the battery capacity warning light flashes continuously.**

(6) Keep clean

⚠ **·Keep the battery surface clean.**

**·Do not use dry cloth, chemical fiber cloth to clean the battery surface. Do not use polyethylene film covered battery.**

**·Static electricity can cause an explosion.**

**·Clean the top of the battery not covered with a moist cloth.**

(7) Wear protective clothing

⚠ **·When maintain the batteries, you should wear goggles, rubber gloves and rubber boots.**

(8) Battery electrolyte is harmful

⚠ **·Battery electrolyte is made of diluted sulfuric acid, be careful when handling.**

**·When electrolyte adhesion conglutination on eyes, skin and clothing, it will result in vision loss and burns.**

(9) Emergency dealing methods

⚠ **·When the accident occurred, deal according to the following methods of emergency treatment and contact a doctor immediately.**

**·Splash on the skin: wash with water for 10-15 minutes.**

**·Splash into the eyes: wash with water for 10-15 minutes.**

**·Contaminated for a large area：counteract(baking soda)electrolyte with dry soda or clean it out with water**

**·Swallowed: to drink plenty of water or milk.**

**·Spilled on clothing, immediately take off clothes.**

(10) Close battery cover tightly.

⚠ **·Cloth battery upper cover tightly to prevent electrolyte from leaking.**

**·Do not add too much electrolyte, electrolyte overflow will cause leakage.**

(11) Waterproof

⚠ **·Batteries can not be wet with rain or sea water, this will damage the battery or cause fire.**

(12) Battery anomaly

⚠ **·When the battery has the following situations, please contact our sales department:**

**·Battery stinks.**

**·Dirty of electrolyte.**

**·Electrolyte temperature becomes higher.**

**·Electrolyte reduces too quickly.**

(13) Prohibit disassemble

⚠ **·Do not drain the electrolyte from the battery.**

**·Do not split the battery.**

**·Do not repair the battery.**

(14) Stored

⚠ **·When the battery is not in use for a long time, it should be stored in well-ventilated place and difficult to fire.**

(15) **Disposal of waste batteries**

⚠ **·Disposal of waste batteries should contact our sales department.**

**7. labeling**

Signs sticked on vehicle are to illustrate using method and attention matters of vehicle, which not only takes consideration of you but also of the vehicle. stick the signs plate on again if they fall off.

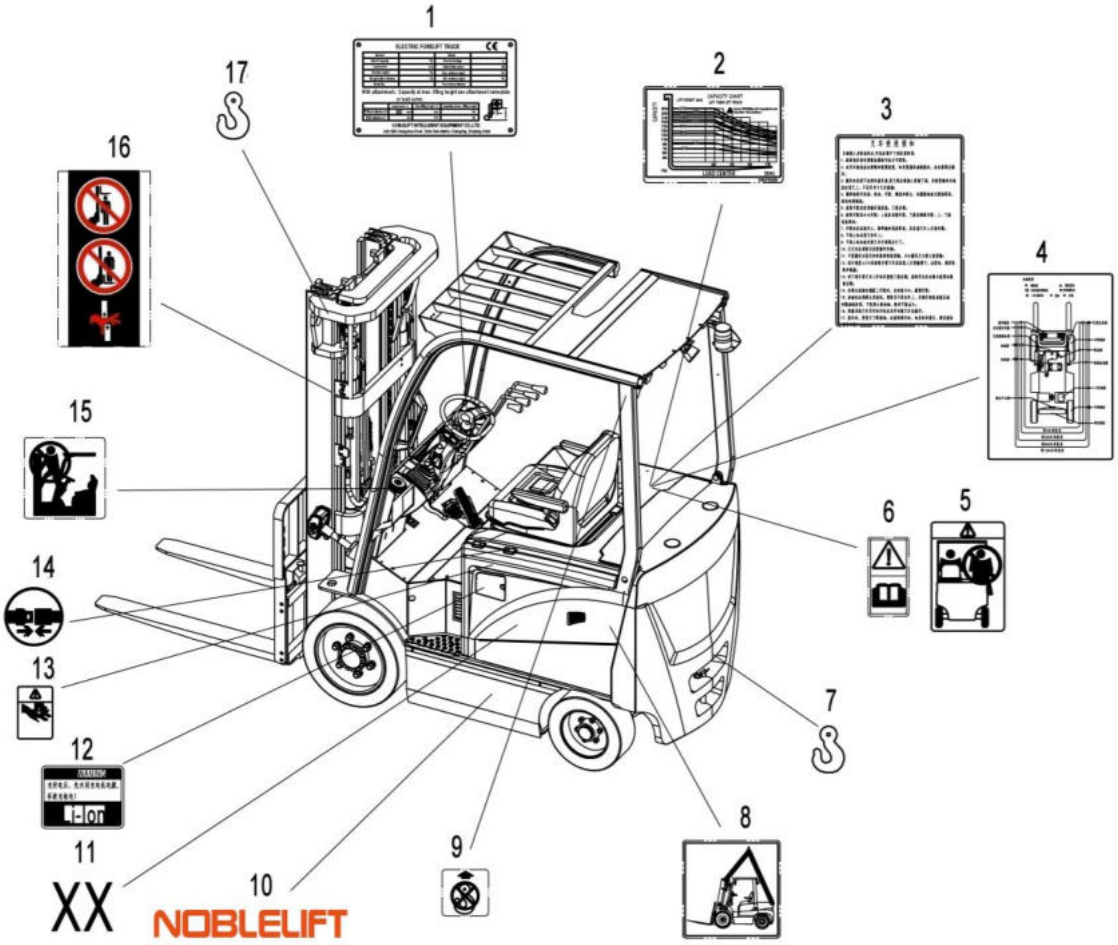


| | | | |
|---|---|---|---|
| 1.nameplate | 2.load curve | 3.Use the information | 4. lubrication chart |
| 5.warning sign | 6.Read the tip | 7.Lifting point | 8.vehicle lifting |
| 9. No lifting point | 10. Company logo | 11. Model identification | 12. Charging logo |
| 13. Squeeze the hand signs | 14. Seat belts | 15. Prohibited to climb | 16. warning sign |
| 17. Lifting point | | | |

# Chapter four Truck's regular check and maintenance

Conduct a comprehensive pre-inspection of forklift trucks and forklifts to avoid failure and fail to produce the life it deserves. Maintenance program is based on the number of hours listed in forklift work 8 hours a day, working 200 hours a month the case may be, in order to maintain safe operation and maintenance procedures should be maintained on the forklift.

Routine maintenance and repair work carried out by the truck drivers, and other inspection and maintenance by professional maintenance personnel.

## Ⅰ. The check before operation

For safe operation and to make sure the truck in good condition, a comprehensive inspection of truck should be conduct before operation, which is a statutory duty. If find problems you should contact our sales department.

**⚠·A small mistake will cause a major accident, do not operate or move the forklift truck before the completion of repair work and inspections.**

**·The forklift should be checked on the platform.**

**·When checking on electrical system of the truck, the key switch should be switched off and the battery plug should be unplug before the test.**

**·Replacement of inappropriate handling of waste oil down (into the water pipe under the soil, burning, etc.) will pollute the water, soil, atmosphere, etc., which is prohibited by law.**

**1. Checking point and checking content**

| | No. | Checking points | Checking contents |
|---|---|---|---|
| Brake system | 1 | Brake pedal | Foot brake pedal travel and braking force |
| | 2 | Brake oil | Quantity and cleanliness |
| | 3 | Parking brake | Parking brake handle travel and the size of operation force |
| Steering system | 4 | Steering wheel control | Elastic, rotation and movement before and after |
| | 5 | Hydraulic steering operation | Operation of all components |
| Hydraulic system and the frame | 6 | Function | Function, it has cracks, lubrication condition |
| | 7 | Pipe | Whether the pipe is leakage |
| | 8 | Hydraulic fuel | The appropriate fuel |
| | 9 | Lifting chain | Left and right should be consistent with two chain tightness |
| Tyre | 10 | Tyre | Pressure size, whether abnormal breakage. |
| | 11 | Wheel nut | Tighten firmly |
| Battery | 12 | Charging | Determine the battery capacity display status, the proportion of the plug should be firmly connected. |
| Lights, horn and switch | 13 | Headlights, taillights, reversing lights, horn turn signals, and emergency power off switch | To see if the light off, listening to speakers if sound, emergency power off switch is abnormal. |
| Detection and display | 14 | Function | When connected to key switch should display "test state normal" |
| Others | 15 | Overhead guard, load backrest | Bolts, nuts are tightened |
| | 16 | Nameplate and marks | Integrity |
| | 17 | Other parts | Normal or not |

## 2. Checking procedure

(1) Check the brake pedal

Check brake condition and to ensure a fully depresses the brake pedal when the plane from the floor counting down the brake pedal travel should be more than 50mm, no-load forklift truck braking distance about 2.5m.

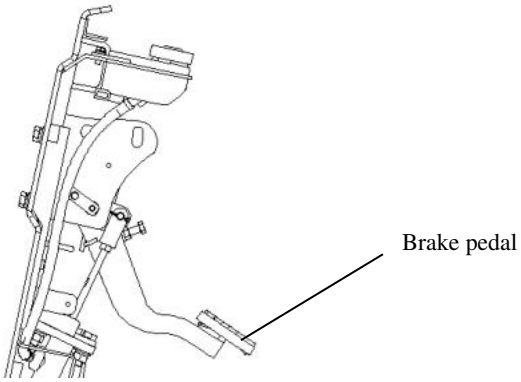


(2) Check the brake oil

⚠ **·Open the lid and check the brake oil and other conditions.**

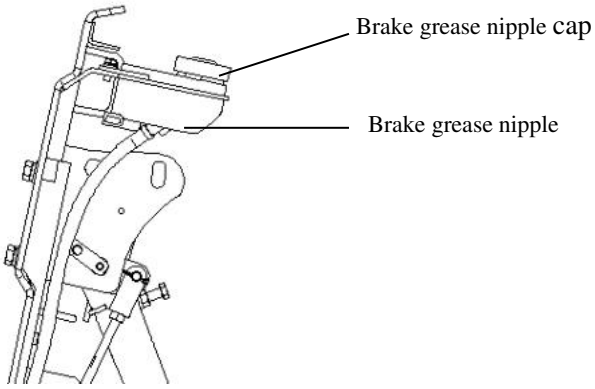


(3) Check parking brake handle

- Push forward parking brake handle and observe following status.
- If there is proper pull jurney
- Brake force value
- Damaged parts or not
- Handle operating force value is suitable to operator or not
- Operator may adjust by the screw installed on the top of handle.

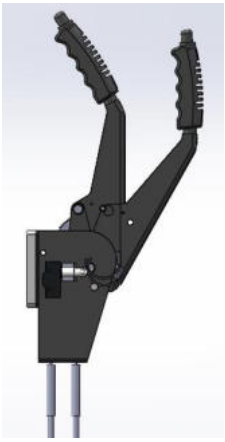

(4) Check the steering wheel rotation case

The steering wheel clockwise and counterclockwise rotating gently, check whether there is rebound phenomenon, a suitable spring trip to 50-100mm. Steering wheel before and after the trips
of about 7 °, if the above situation, turn the steering wheel shall be normal.

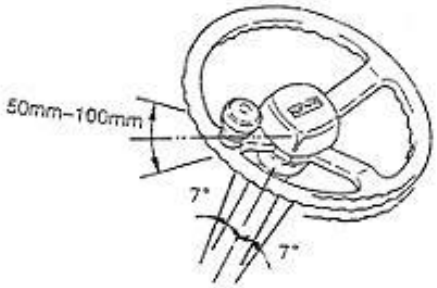


(5) Check the function of steering system

The steering wheel clockwise and counterclockwise rotation, check the power steering work.

(6) Check hydraulic system and frame function

Check the upgrade and after dumping the normal operation is smooth

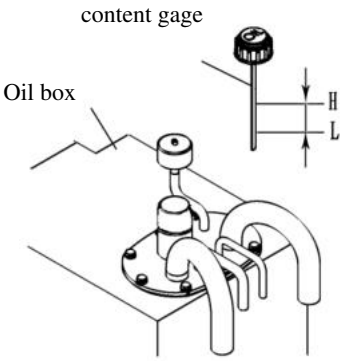


(7) Check pipeline

Check lift cylinder, tilt cylinder, and all pipeline whether oil leak.

(8) Check the hydraulic oil

Land the fork to the ground, check oil level gauge hydraulic oily bits, when the oil level in the H to the L range, the volume of hydraulic point oil suitable range.

| model | H | L |
|---|---|---|
| FE4P25-32C | 30 | 28 |

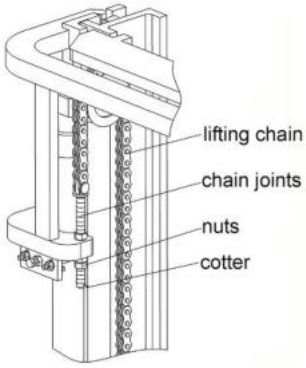


(9) Check the lifting chain

Bring fork to the ground 200-300mm high, to ensure the tightness around the same chain. Check finger stick is in the middle, if different tightness can be adjusted through the chain joints.

⚠ **·After adjustment, should be double nuts tighten.**

(10) Check tires (pneumatic tires)

Unplug the nozzle cap, measuring tire pressure with a tire air pressure. After check air pressure, nozzle mouth should ensure that gas will not leak before installed the cap.

⚠ **·Forklift tire pressure is higher than the car's; it should not exceed the prescribed pressure value.**

Check tyre（solid tyre）

Check if there is dilapidation or leakage on tyre and its sides, and if there is deformation or damage in wheel rib and locking collar

(11) Check wheel nut

⚠ **·Wheel nut loosening is very dangerous, if loose, the wheels may fall off, resulting in vehicle flip. Check the availability of loose wheel nut, it is very dangerous even one of them is loose, so be screwed to the provisions of pre-torque value.**

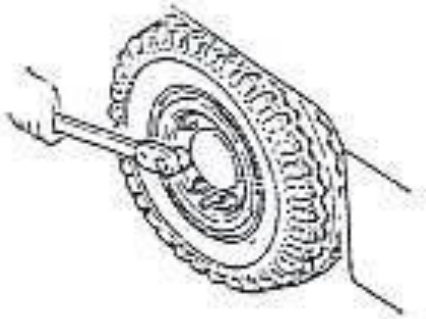

(12) Check charge condition

Measuring the proportion of battery, when converted to 30 ℃, the battery proportion from 1.275 to 1.285, indicating the battery is fully charged, and check whether the terminal block is loose, and whether the cable is damage.

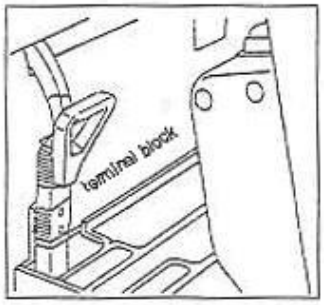


(13) Check headlights, turn signals and horn

Check whether the normal bright lights, speakers is normal (when pressing the horn button, horn ring)

Check whether the emergency stop is normal.

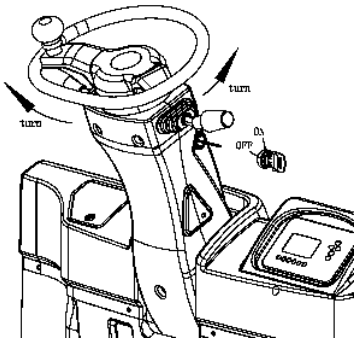


| | |
|---|---|
| L | left steering light is bright |
| N | neutral |
| R | right steering light is bright |

(14) Check instrument panel features

Normally, after a few seconds turn the key switch, the dashboard will be the following graph shows

⚠ **In addition to checking lights and operating conditions, the key switch must be turned off and disconnect the battery plug before check the electrical system.**

## Ⅱ.Check after operation

After the completion of the work remove the dirt on forklift and check the forklift according to the follow items：

(1) Check all the parts if there is damage or leakage.

(2) If there is deformation, distortion, damage or breakage?

(3) Add lubricating grease according to the situation.

(4) Let fork upgrade to the max height for several times after work. (When the daily work is not up to the fork with the arrival of the maximum height of the situation, it would allow oil flow through the tanks of the entire journey, to prevent rust.)

(5) Replace the faulty component which caused malfunction during work.

⚠ **· A small mistake will cause a major accident. Do not operate or move the forklift truck before completion of repair work and inspections.**

## Ⅲ.Truck cleaning

⚠ **·Stop the truck at the specified location.**
**·Pull the parking brake handle.**
**·Press the emergency stop switch.**
**·Turn off the key switch and remove the key.**
**·Disconnect the battery plug.**

**1. Truck surface cleaning .**

⚠ **·Do not use flammable liquid to clean trucks, take safety measures to prevent short circuit.**

·Use water and soluble detergent to clean the truck.

·Clean the oil filler and periphery of grease tap carefully.

⚠ **If regular cleaning truck, please lubricate timely.**

**2. Chains cleaning**

⚠ **·Do not use chemical detergent, acids or other corrosive liquid to clean the chain.**

·Place a tank in the bottom of the frame.

·Use gasoline or other petrochemical derivatives to clean the chain.

·Do not add any additive when use the steam nozzle cleaning.

·Dry immediately after cleaning of the chain pin and the water stain on chain surface.

**3. Electric system cleaning**

⚠ **·Do not use water to clean the pump control and a variety of connectors, so as not to cause damage to electrical systems.**

Use non-metallic brush or low-power hair dryer, according to the manufacturer instructions to clean the electrical system; do not move the protective cover.

**4. After cleaning**

·Thoroughly dry water stains on the truck (use compressed air as a example).

·Start the forklift according to the procedures.

⚠ **·If moisture penetration into the motor, you must first remove the moisture, to prevent short circuits**

⚠ **Moisture will reduce brake performance, brake truck briefly to drying the brake.**

## Ⅳ. Regular maintenance

·Thoroughly dry water stains on the truck (use compressed air as a example).

·Start the forklift according to the procedures.

⚠ **·If moisture penetration into the motor, you must first remove the moisture, to prevent short circuits**

⚠ **Moisture will reduce brake performance, brake truck briefly to drying the brake.**

### 1. Regular maintenance schedule

√—Check, calibration, adjustment ×—Change

(1) Battery

| Maintenance item | Maintenance item | Tools | Every-day (8h) | Every week (50h) | Every month (200h) | Three months (600h) | Six months (1200h) |
|---|---|---|---|---|---|---|---|
| Battery | Quantity of electricity | | √ | √ | √ | √ | √ |
| | Terminals are loose | | √ | √ | √ | √ | √ |
| | The cable is loose | | √ | √ | √ | √ | √ |
| | Surface cleanness of the battery | | √ | √ | √ | √ | √ |
| | Battery surface has placed Tools | | √ | √ | √ | √ | √ |
| | Ventilation cover is tightened, vent is unimpeded | | | √ | √ | √ | √ |
| | Away from the fireworks | | √ | √ | √ | √ | √ |

（2）Controller

| Maintenance item | Maintenance item | Tools | Every-day (8h) | Every week (50h) | Every month (200h) | Three months (600h) | Six months (1200h) |
|---|---|---|---|---|---|---|---|
| Controller | Check the wear condition of contactors | | | | | √ | √ |
| | Check if contactor mechanical movement is good | | | | | √ | √ |
| | Check micro switch operation of the pedal is normal | | | | | √ | √ |
| | Check if the motor, battery and power unit is a good connection | | | | | √ | √ |
| | Check if the malfunction analysis system is normal | | | | | | At the begin-ning of 2 years |

（3）Motor

| Maintena-nce item | Maintenance item | Tools | Every-day (8h) | Every week (50h) | Every month (200h) | Three months (600h) | Six months (1200h) |
|---|---|---|---|---|---|---|---|
| Motor | Remove the eye winker from the motor shell | | | | √ | √ | √ |
| | Clean or change bearing | | | | | | √ |
| | If Carbon brushes, commutator is worn, the spring force is normal | | | | √ | √ | √ |
| | If Wiring is correct, reliable | | | | √ | √ | √ |
| | Clearing brush and commutator surface for the film end on toner | | | | | √ | √ |

（4）Transmission system

| Maintena-nce item | Maintenance item | Tools | Every day (8h) | Every week (50h) | Every month (200h) | Three months (600h) | Six months (1200h) |
|---|---|---|---|---|---|---|---|
| Gearbox and Wheel Reducer | Noises | | √ | √ | √ | √ | √ |
| | Check leakage | | √ | √ | √ | √ | √ |
| | Change oil | | | | | | × |
| | Check the working condition of brake | | √ | √ | √ | √ | √ |
| | Check the moving of qear wheel | | | | | √ | √ |
| | Check the junction with the frame bolts loose situation | | | | √ | √ | √ |
| | Check wheel bolt tightening torque | Torque wrench | √ | √ | √ | √ | √ |

（5）Wheel(forward, backward wheel)

| Maintena-nce item | Maintenance item | Tools | Every-day (8h) | Every week (50h) | Every month (200h) | Three months (600h) | Six months (1200h) |
|---|---|---|---|---|---|---|---|
| Tyre | Wear, cracks or damage | | √ | √ | √ | √ | √ |
| | If there is nails, stone or other foreign items on tire matter | | | | √ | √ | √ |
| | Wheel damage | | √ | √ | √ | √ | √ |

（6）Steering system

| Maintena-nce item | Maintenance item | Tools | Every-day (8h) | Every week (50h) | Every month (200h) | Three months (600h) | Six months (1200h) |
|---|---|---|---|---|---|---|---|
| Steering | Check clearance | | √ | √ | √ | √ | √ |

| | | | | | | | |
|---|---|---|---|---|---|---|---|
| wheel | Check axis loose | | √ | √ | √ | √ | √ |
| | Check radial loose | | √ | √ | √ | √ | √ |
| | Check operation condition | | √ | √ | √ | √ | √ |
| Steering gear and valve block | Check if mounting bolts are loose | | | | √ | √ | √ |
| | Check valve block interface with steering leak case | | √ | √ | √ | √ | √ |
| | Check seal of connectors | | √ | √ | √ | √ | √ |
| Rear-axle | Check whether the rear axle mounting bolts loose | | | | √ | √ | √ |
| | Check if there is bending, deformation, cracks or damage | | | | √ | √ | √ |
| | Check or replace the lubrication of bridge bearing. | | | | | √ | √ |
| | Check or replace lubrication of bridge bearing | | | | | √ | √ |
| | Check steering cylinder operating conditions | | √ | √ | √ | √ | √ |
| | Check whether steering cylinder is leaking | | √ | √ | √ | √ | √ |
| | Check rack and pinion gear case | | | | | √ | √ |
| | wiring and working condition of sensor | | | | | √ | √ |

（7）Brake system

| Mainten-ance item | Maintenance item | Tools | Every-day (8h) | Every week (50h) | Every month (200h) | Three months (600h) | Six months (1200h) |
|---|---|---|---|---|---|---|---|
| Brake pedal | Empty run | Gradu-ated scale | √ | √ | √ | √ | √ |
| | Pedal travel | | √ | √ | √ | √ | √ |
| | Operation condition | | √ | √ | √ | √ | √ |
| | Whether there is air in the brake pipe | | √ | √ | √ | √ | √ |
| Stop, brake and control | Whether the brake is safe and has enough travel | | √ | √ | √ | √ | √ |
| | Operation condition | | √ | √ | √ | √ | √ |
| Pole and cable | Operating performance | | | | √ | √ | √ |
| | Whether the connection is loosen | | | | √ | √ | √ |
| | Wear of reduction gearbox connectors | | | | | √ | √ |
| pipe | Damage, leakage, rupture | | | | √ | √ | √ |

| | | | | | | | |
|---|---|---|---|---|---|---|---|
| | Loose situation of connection and clamping parts | | | | √ | √ | √ |
| Brake pump | Leakage situation | | √ | √ | √ | √ | √ |
| | Check oil level, oil changing. | | √ | √ | √ | | × |
| | Pump situation | | | | | √ | √ |
| | Pump leakage, damage | | | | | √ | √ |
| | Pump piston cups, one-way valve wear damage, replace | | | | | | × |

（8）Hydraulic system

| Maintena-nce item | Maintenance item | Tools | Every-day (8h) | Every week (50h) | Every month (200h) | Three months (600h) | Six months (1200h) |
|---|---|---|---|---|---|---|---|
| Hydraulic oil tank | Check the oil, oil change | | √ | √ | √ | √ | × |
| | Suction filter cleaning | | | | | | √ |
| | Exclude eye winker | | | | | | √ |
| Control lever | Whether the connection is loosen | | √ | √ | √ | √ | √ |
| | Operation condition | | √ | √ | √ | √ | √ |
| Multitandem valve | Leakage | | √ | √ | √ | √ | √ |
| | Safety valve and self-locking tilt valve operation condition | | | | √ | √ | √ |
| | Measuring the pressure of the safety valve | Oil gauge | | | | | √ |
| Pipeline joint | Leakage, loosening, fracture, deformation, damage | | | | √ | √ | √ |
| | Change the tube | | | | | | × 1～2years |
| Hydraulic pump | Hydraulic pump is leaking or there is noise | | √ | √ | √ | √ | √ |
| | Hydraulic pump gear wear | | | | √ | √ | √ |

（9）Lifting system

| Maintena-nce item | Maintenance item | Tools | Every-day (8h) | Every week (50h) | Every month (200h) | Three months (600h) | Six months (1200h) |
|---|---|---|---|---|---|---|---|
| Chain and chain wheel | Check the chain tension state, whether deformation, corrosion damage | | √ | √ | √ | √ | √ |
| | Fuel chain | | | | √ | √ | √ |

| | | | | | | | |
|---|---|---|---|---|---|---|---|
| | Rivet pin and loose conditions | | | | √ | √ | √ |
| | Chain wheel deformation, damage | | | | √ | √ | √ |
| | If Bearings of chain wheel loosen | | | | √ | √ | √ |
| Attachment | Check whether in normal state | | | | √ | √ | √ |
| Lifting and tilt cylinder | Whether Piston rod, piston rod thread and the connection is loose, deformation, damage | | √ | √ | √ | √ | √ |
| | Operating conditions | | √ | √ | √ | √ | √ |
| | Leakage | | √ | √ | √ | √ | √ |
| | abrading and damaging status of pin and oil cylinder | | | | √ | √ | √ |
| Fork | Damage, deformation, wear of fork | | | | √ | √ | √ |
| | Damage, deformation, wear of allocation pin | | | | | √ | √ |
| | cracking and abrading status in hooker welding of fork root | | | | √ | √ | √ |
| Mast fork frame | welding between inner mast, outer mast and beam is cracking or damaged or not | | | | √ | √ | √ |
| | Tilt cylinder bracket and the door frame weld whether cracking, damage | | | | √ | √ | √ |
| | Inner frame, outer frame weld whether cracking, damage | | | | √ | √ | √ |
| | Fork frame weld whether cracking, damage | | | | √ | √ | √ |
| | wheel loosen | | | | √ | √ | √ |
| | Mast bearing wear, damage | | | | | | √ |
| | Mast bearing cap bolts whether loose | | | | √ | | √ |
| | Whether Lift cylinder rod bolt head, bending plate bolts loose | | | | √ | | √ |
| | cracking, damaging status of welding of roller and roller shaft | | | | √ | √ | √ |

（10）Else

| Maintena-nce item | Maintenance item | Tools | Every-day (8h) | Every week (50h) | Every month (200h) | Three months (600h) | Six months (1200h) |
|---|---|---|---|---|---|---|---|
| Overhead guard and load backrest | Installation is firmly | Measur-ing hammer | √ | √ | √ | √ | √ |
| | Check the deformation, cracking, damage | | √ | √ | √ | √ | √ |
| Indicator light for steering | Work and installations | | √ | √ | √ | √ | √ |
| Horn | Work and installations | | √ | √ | √ | √ | √ |
| Lamps and bulbs | Work and installations | | √ | √ | √ | √ | √ |
| Reversing Buzzer | Work and installations | | √ | √ | √ | √ | √ |
| Instrument | Working condition | | √ | √ | √ | √ | √ |
| Wire | Harness injury, loosening | | | √ | √ | √ | √ |
| | Electrical connection loose | | | | √ | √ | √ |

**2. Regular replacement of key safety parts**

Periodic replacement of critical safety components.

When some parts difficult to find through regular maintenance of injury or damage, in order to further improve security, the user should replace the parts given in the following table for regular.

If the parts appeared abnormal before the time comes to replace, it should be replaced immediately.

| **Name of critical safety components** | **Useful life** |
|---|---|
| Brake tube or hard pipe | I～2 |
| Hydraulic hose for lifting system | I～2 |
| Lifting chain | 2～4 |
| High pressure hose/tube for hydraulic system | 2 |
| Oil cup of brake fluid | 2～4 |
| Cylinder cover and dust cover of brake pump | 1 |
| Internal hydraulic system seals, rubber parts | 2 |

## Ⅴ.Area lubricated and lubricant recommended

### 1. Area lubricated

○：Change
◎：reinforce
□：Check and adjust
BO： Brake fluid
FO： Hydraulic oil
GO： Gear oil
CG： Grease
W： Distilled water

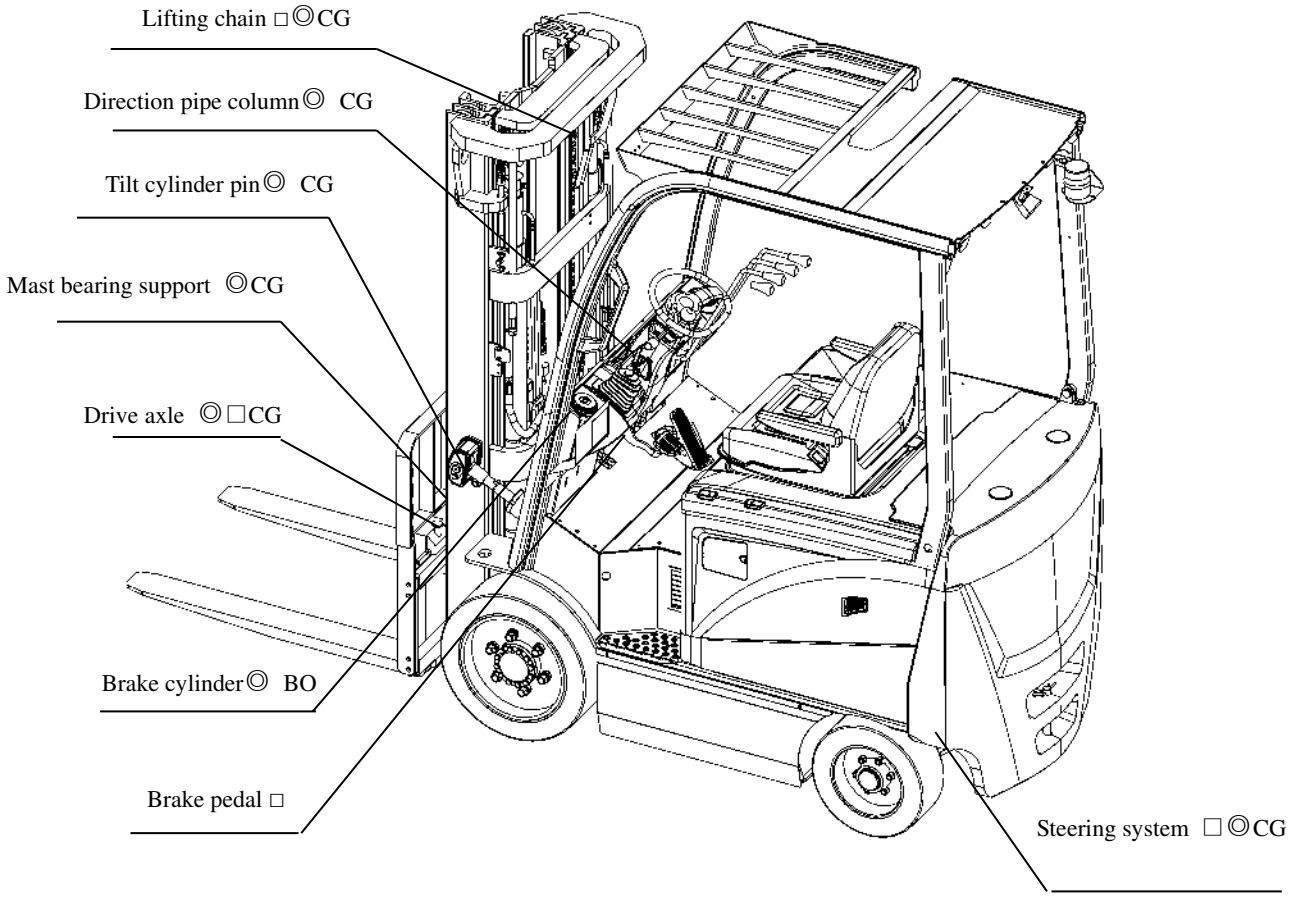


### 2. Lubricant recommended

| Name | Trademark | Capability(L) | Remark |
|---|---|---|---|
| Hydraulic oil | L-HM32 | 30 | ≥-5℃ |
| | L-HV32 | | ≥-20℃ |
| Gear oil | 85W/90GL-5 | 3.3 | -15℃ ~ +49℃ |
| | 80W/90GL-5 | | -25℃ ~ +49℃ |
| Brake fluid | Caltex DOT3 | 0.2 | |
| Grease | 3# Lithium Grease | | |

## Maintenance record form

| No. | Date | Contents of Maintenance | Recoder |
|---|---|---|---|
| | | | |
| | | | |
| | | | |
| | | | |
| | | | |
| | | | |
| | | | |
| | | | |
| | | | |
| | | | |
| | | | |
| | | | |
| | | | |
| | | | |
| | | | |
| | | | |
| | | | |
| | | | |
| | | | |
| | | | |
| | | | |
| | | | |

**NOBLELIFT INTELLIGENT EQUIPMENT CO., LTD.**
Service hotline：4008-836115
Wechat：nuolijixie
Postcode：313100 Email address: info@noblelift.com
Website：www.noblelift.com
Version：Dec, 2022