发动机及安装(柴油机)/ENGINE(DIESEL)（2.5-3.5t）

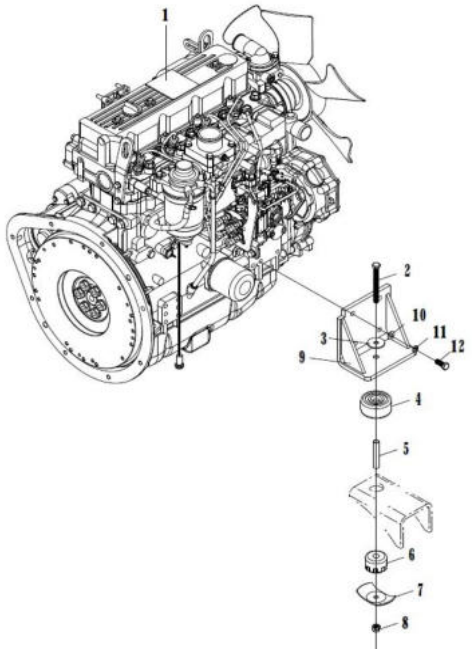

序号/NO	编码/SN	名称	Name	数量/QTY	备注/Remark
1	RF035-4-1603000-A0	发动机（4TNE98）	YANMAR 4TNE98 Engine	1	2.5-3.5t（YANMAR98）
1	F030-DL-1601000-A0	发动机（S4S-455）	MITSUBISHI S4S-455 Engine	1	2.5-3.5t（S4S-455）
2	910100100043	螺栓M10×110GB/T5782-2000	Bolt M10×110	2	
3	F030-D-1300001	垫圈A	Washer A	2	F030-D-1300000-A0 发动机减震组
4	F030-D-1300003	橡胶垫A	Rubber damper A	2	
5	F030-D-1300002	套管	Steel casing	2	
6	F030-D-1300004	橡胶垫B	Rubber damper B	2	
7	F030-D-1300005	垫圈B	Washer B	2	
8	910300500005	螺母M10GB/T6182-2000	Nut M10	2	
9	F030-D-1603000-A0	发动机支脚	Engine bracket	2	YANMAR98
9	F030-DL-1602000-A0	发动机左支脚	Engine bracket	1	S4S-455
9	F030-DL-1603000-A0	发动机右支脚	Engine bracket	1	S4S-455
10	910400100007	垫圈10GB/T97.1-1987	Washer 10	8	
11	910400500007	垫圈10GB/T93-1987	Washer 10	8	
12	910100300037	螺栓M10×30GB/T5783-2000	Bolt M10×30	8	

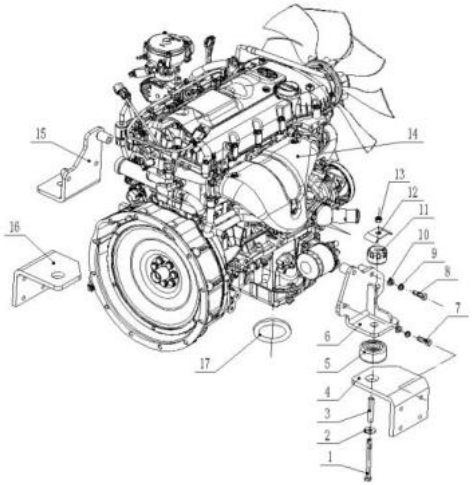

发动机及安装/ENGINE（2.5-3.5t）					
序号/NO	编码/SN	名称	Name	数量/QTY	备注/Remark
1	910100100043	螺栓 M10×110GB/T5782-2000	Bolt M10×110	2	F030-D-1300000-A0 发动机减震组
2	FD30N13-00001	垫圈A	Washer A	2	
3	FD30N13-00002	套管	casing	2	
4	F030-DV-1603000-A0	发动机右支撑（现代L4KB）	Engine right brace（L4KB）	1	现代L4KB
4	F030-DV-1602000-A0	发动机左支撑（LS L4CRTV4）	Engine left support	1	LS L4CRTV4
4	F030-DX-1604000-A0	发动机左支撑	Engine left support	1	新柴
4	F030-DC-1604000-A0	发动机支撑	Engine left support	1	新柴欧5
5	FD30N13-00003	橡胶垫A	Rubber mat A	2	F030-D-1300000-A0 发动机减震组
6	F030-GLHH-1602000-A0	发动机左支架	Engine left support	1	现代L4KB
6	F030-DV-1604000-A0	发动机左支脚	Engine left support	1	LS L4CRTV4
6	F030-DC-1602000-A0	发动机左支架	Engine left support	1	新柴欧5
7	910100300037	螺栓M10×30GB/T5783-2000	Bolt M10×30	12	
8	910100100034	螺栓M10×55GB/T5782-2000	Bolt M10% x55	3	
9	910400500007	垫圈10GB/T93-1987	Washer 10	8	
10	910400100007	垫圈10GB/T97.1-1987	Washer 10	8	
11	FD30N13-00004	橡胶垫B	Rubber mat B	2	F030-D-1300000-A0 发动机减震组
12	FD30N13-00005	垫圈B	gasket B	2	
13	910300500005	螺母 M10GB/T6182-2000	Nut M10	2	
14	F030-GLHH-1601000-A0	发动机总成	Engine Assembly	1	现代L4KB双燃料认证
14	F030-LHH-1601000-A0	发动机总成	Engine Assembly	1	现代L4KB单燃料认证
14	F030-DV-1601000-A0	发动机总成	Engine Assembly	1	LS L4CRTV4
14	F030-DX-1602000-A0	发动机总成	Engine Assembly	1	新柴
14	F030-DC-1601000-A0	发动机总成	Engine Assembly	1	新柴欧5
15	F030-GLHH-1603000-A0	发动机右支架	Engine right support	1	现代L4KB
15	F030-DV-1605000-A0	发动机右支脚	Engine right support	1	LS L4CRTV4
15	F030-DC-1603000-A0	发动机右支架	Engine right support	1	新柴欧5
16	F030-DV-1602000-A0	发动机左支撑	Engine left support	1	双燃料
16	F030-DV-1603000-A0	发动机右支撑	Engine right brace	1	LS L4CRTV4
16	F030-DX-1603000-A0	发动机右支撑	Engine right brace	1	新柴
16	F030-DC-1604000-A0	发动机支撑	Engine left support	1	新柴欧5
17	910700200075	深沟球轴承61903GB/T276-1994	Deep groove ball bearing 61903	1	现代L4KB

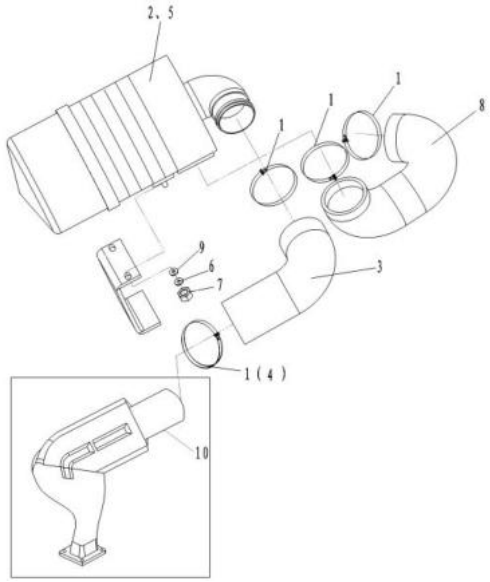

空滤器及安装(柴油机)/AIRCLEANERASS'Y(DIESEL)(2.5-3.5t)

序号/NO	编码/SN	名称	Name	数量/QTY	备注/Remark
1	911000600017	喉箍JB/T8870-(60-80)	HoopΦ80（Double Wire)	4	
2	RF035-4-1201000-A0	空滤器K127260-1（含05）	Air cleaner K127260-1(Inc.05)	1	YANMAR98、S4S
2	F030-DX-1201000-A0	空滤器（含305）	Air cleaner K127260(Inc.05)	1	新柴、新柴欧5
3	RF035-2-1200001-A0	空滤器出气管	Air cleaner hose (outlet)	1	YANMAR98
3	F030-DL-1200001-A0	空滤器出气管	Air cleaner hose (outlet)	1	S4S
3	F030-DX-1200001-A0	空滤器出气管	Air cleaner hose (outlet)	1	新柴
3	F030-DC-1200001-A0	空滤器出气管	Air cleaner hose (outlet)	1	新柴欧5
4	911000600017	喉箍JB/T8870-(60-80)	Hoop Φ75 (Double Wire)	1	YANMAR 98
5	293098529501	空滤芯K127260-1	Air filter core	1	
6	910400500006	垫圈8GB/T93-1987	Washer 8	2	
7	910300100006	螺母M8GB/T6170-2000	Nut M8	2	
8	RF035-4-1200002-A0	空滤器进气管	Air cleaner hose (inlet)	1	
9	910400100006	垫圈8GB/T97.1-2002	Washer 8	2	
10	-	进气接管	Ventilation Duct	1	YANMAR98发动机自带

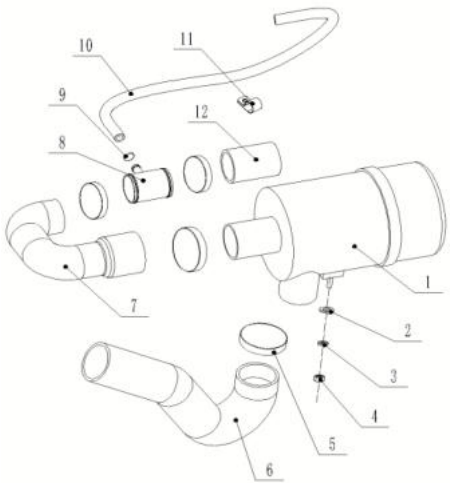

空滤器及安装/AIRCLEANERASS'Y(2.5-3.5t)					
序号/NO	编码/SN	名称	Name	数量/QTY	备注/Remark
1	F030-DX-1201000-A0	空滤器	Air cleaner	1	
2	910400100006	垫圈8GB/T97.1-2002	Washer 8	2	
3	910400500006	垫圈8GB/T93-1987	Washer 8	2	
4	910300100006	螺母M8GB/T6170-2000	Nut M8	2	
5	911000600017	喉箍d60-80JB/T8870-1999	Hose clamp d60-80	3	
6	RF035-4-1200002-A0	空滤器进气管	Air cleaner hose (inlet)	1	
7	F030-GLH-1200001-A0	空滤器出气管Ⅰ	Air cleaner hose (inlet) I	1	现代L4KB
7	F030-DV-1200001-A0	空滤器出气管	Air cleaner hose (inlet) I	1	LS L4CRTV4
8	F030-GLH-1201000-A0	进气接管	air inlet piping	1	现代L4KB
8	F030-DV-1201000-A0	进气接管	air inlet piping	1	LS L4CRTV4
9	911000600012	喉箍d12-22JB/T 8870-1999	Hose hoops d12-22	2	
10	F030-GLH-1200003-A0	废气管	off-gas line	1	现代L4KB
10	F030-DV-1200005-A0	废气管	off-gas line	1	LS L4CRTV4
11	951000100010	R型抱箍Φ16	R hoop Φ16	1	
12	F030-GLH-1200002-A0	空滤器出气管Ⅱ	Air cleaner hose (inlet) II	1	现代L4KB
12	F030-DV-1200004-A0	空滤器出气管	Air cleaner hose (inlet) II	1	LS L4CRTV4

冷却装置及安装/COOLINGSYSTEM(2.5-3.5t)

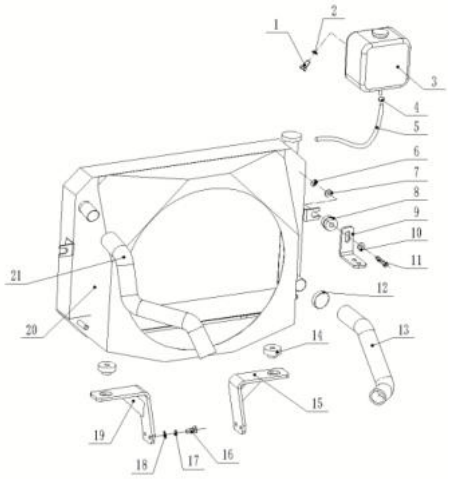

序号/NO	编码/SN	名称	Name	数量/QTY	备注/Remark
A	-	冷却系统	Cooling system	1	
1	910100300010	螺栓M6×16GB/T5783-2000	Bolt M6×16	2	
2	910400500005	垫圈6GB/T93-1987	Washer 6	2	
3	H24C2-10201	冷却液回收罐	Coolant recovery tank	1	
4	911000600008	喉箍d10-16JB/T8870-1999	Hoop d10-16	2	
5	RF035-4-2100006-A0	橡胶管Φ8×2-600	Rubber pipe Φ8×2-600	1	
6	910300500004	螺母M8GB/T889.1-2000	Nut M8	2	
7	910400200003	垫圈8GB/T96.1-2002	Washer 8	2	
8	RF035-4-2100002-A0	橡胶垫B	Rubber danper B	2	
9	F030-D-2100001-A0	散热器上支架	Heat sink upper bracket	2	S4S ，洋马98，LS L4CRTV4
9	F030-DX-2100003-A0	散热器上支架	Heat sink upper bracket	2	新柴、新柴欧5
10	910400200005	垫圈12GB/T96.1-2002	Washer 12	2	
11	RF035-4-2100003-A0	水箱螺栓	Radiator Bolt	2	
12	911000600015	喉箍Φ27-51JB/T8870-1999	Hose hoops % c27-51	4	
13	F030-D-2100002-A0	下水管	Water outlet hose	1	洋马98
13	F030-DL-2100001-A0	下水管	Water outlet hose	1	S4S
13	F030-DX-2100002-A0	下水管	Water outlet hose	1	新柴
13	F030-DV-2100002-A0	下水管	Water outlet hose	1	LS L4CRTV4
13	F030-GLH-2100002-A0	下水管	Water outlet hose	1	现代双燃料
13	F030-DC-2100001-A0	下水管	Water outlet hose	1	新柴欧5
14	RF035-4-2100001-A0	橡胶垫A	Rubber danper A	1	
15	F030-GLH-2103000-A0	散热器左下支架	Lower left radiator bracket	1	现代双燃料
15	F030-DX-2103000-A0	散热器左下支架	Lower left radiator bracket	1	新柴
15	F030-D-2102000-A0	散热器下支架	Lower left radiator bracket	2	S4S，洋马98，LS，新柴欧
16	910100300020	螺栓 M8×16GB/T5783-2000	Bolt M8×16	4	
17	910400500006	垫圈 8GB/T93-1987	Washer 8	4	
18	910400100006	垫圈 8GB/T97.1-2002	Washer 8	4	
19	F030-GLH-2102000-A0	散热器右下支架	Radiator lower right bracket	1	双燃料
19	F030-DX-2102000-A0	散热器右下支架	Radiator lower right bracket	1	新柴
20	F030-D-2101000-A0	散热器总成	radiator assy	1	洋马98
20	F030-DL-2101000-A0	散热器总成	radiator assy	1	S4S，LS L4CRTV4

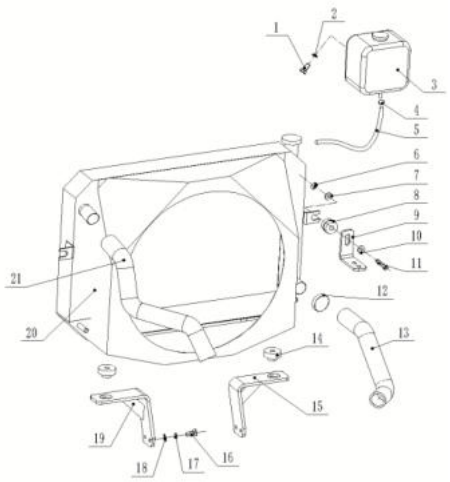

冷却装置及安装/COOLINGSYSTEM(2.5-3.5t)

序号/NO	编码/SN	名称	Name	数量/QTY	备注/Remark
20	F030-DX-2101000-A0	散热器总成	radiator assy	1	新柴
20	F030-GLH-2101000-A0	散热器总成	radiator assy	1	现代双燃料
20	F030-DC-2101000-A0	散热器总成	radiator assy	1	新柴欧5
21	F030-GLH-2100001-A0	上水管	Water inlet hose	1	现代双燃料
21	RF035-4-2100004-A0	上水管	Water inlet hose	1	洋马98
21	F030-DL-2100002-A0	上水管	Water inlet hose	1	S4S
21	F030-DX-2100001-A0	上水管	Water inlet hose	1	新柴
21	F030-DV-2100001-A0	上水管	Water inlet hose	1	LS L4CRTV4
21	F030-DC-2100002-A0	上水管	Water inlet hose	1	新柴欧5

燃油装置及安装（柴油）/FUELSYSTEMMOUNT(2.5-3.5t)

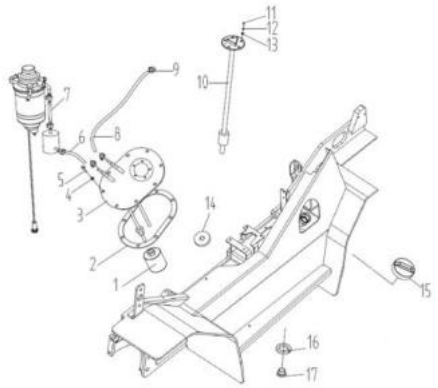

序号/NO	编码/SN	名称	Name	数量/QTY	备注/Remark
1	RF035-4-2201000-A0	滤油器（Y0606）	Fuel filter（Y0606）	1	
2	RF035-4-2200002-A0	密封垫	Gasket	1	
3	RF035-4-2202000-A0	燃油箱盖板总成	Cover plate ass'y	1	
4	910400500006	垫圈8GB/T93-1987	Washer 8	8	
5	910100300022	螺栓M8×20GB/T5783-2000	Bolt M8×20	9	
6	RF035-4-2200006-A0	胶管φ8×3-（550）	Hoseφ8×3-（550）	1	
7	RF035-4-2200003-A0	胶管φ8×3-（280）	Hoseφ8×3-（280）	1	YANMAR98、S4S、LS、新款
8	RF035-4-2200005-A0	胶管φ8×3-（650）	Hoseφ8×3-（650）	1	
9	911000600008	喉箍d10-16JB/T8870-1999	Hose clamp d10-16	6	
10	RF035-4-2204000-A0	油位传感器(TBRG4111)	Fuel quantity sensor(TBRG4111)	1	
11	910200500038	螺钉M5×12GB/T818-2000	Screw M5×12	5	
12	910400500004	垫圈5GB/T93-1987	Washer 5	5	
13	910400100004	垫圈5GB/T97.1-2002	Washer 5	5	
14	RF035-4-2200001-A0	吸铁石	Magnet	1	
15	RF035-4-2203000-A0	加油盖	Oiling cap	1	
16	910800900001	垫圈20JB/T982-77	Washer 20	1	
17	RF035-4-2200004-A0	放油塞	Drain plug	1	

燃油装置及安装（汽油）/FUELSYSTEMMOUNT(2.5-3.5t)

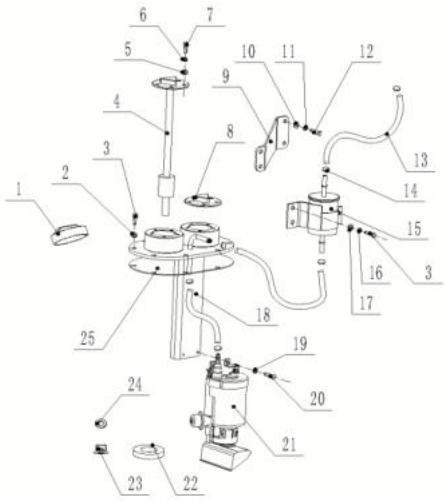

序号/NO	编码/SN	名称	Name	数量/QTY	备注/Remark
A	-	燃油装置及安装	FUEL SYSTEM ASS'Y	1	双燃料
1	RF035-4-2203000-A0	加油盖	Tank filler cap	1	
2	910800900010	垫圈8JB/T982-1977	washer 8	8	
3	910100300022	螺栓M8×20GB/T5783-2000	Bolt M8 x 20	8	
4	RF035-4-2204000-A0	油位传感器	Engine oil level Sensor	1	
5	910400100004	垫圈5GB/T97.1-2002	washer 5	10	
6	910400500004	垫圈5GB/T93-1987	washer 5	10	
7	910200500038	螺钉M5×12GB/T818-2000	Screw M5×12	10	
8	F030-GLH-2202000-A0	传感器改制	Modification of sensor	1	双燃料
9	F030-GLH-2200003-A0	滤清器支架	Air cleaner bracket	1	双燃料
10	910400100005	垫圈6GB/T97.1-2002	washer 6	2	
11	910400500005	垫圈6GB/T93-1987	washer 6	2	
12	910100300009	螺栓M6×12GB/T5783-2000	Bolt M6 x12	2	
13	RF035-4-2200003-A0	燃油管φ8×3-(430)	Fuel Pipeφ8×3-(430)	1	双燃料
14	911000600008	喉箍d16JB/T8870-1999	Hose clamps	6	
15	293098559502	汽油滤清器RS-033	Diesel filter	1	双燃料（发动机附件）
16	910400100006	垫圈 8GB/T97.1-2002	washer 8	4	
17	910400500006	垫圈 8GB/T93-1987	washer 8	4	
18	F030-GLH-2201000-A0	燃油箱盖板	Fuel tank cover	1	
19	910400500003	垫圈4GB/T93-1987	Washer 4	2	
20	910200500022	螺钉M4×12GB/T818-2000	Screw the M4% x12	2	
21	293098559503	吸油泵31110 23C00	Engine water oil separator	1	双燃料（发动机附件）
22	RF035-4-2200001-A0	磁铁 60×32×10	Magnet 60×32×10	1	
23	RF035-4-2200004-A0	放油螺塞	purge cock	1	
24	910800900001	组合垫20JB/T982-1977	compound gasket 20	1	
25	RF035-4-2200002-A0	密封垫	gasket	1	

注：本页仅适用于现代双燃料发动机HYUNDA HMC2.4L

转换装置及安装（汽油机）/EXHAUSTSYSTEM(GASOLINE)(2.5-3.5t)

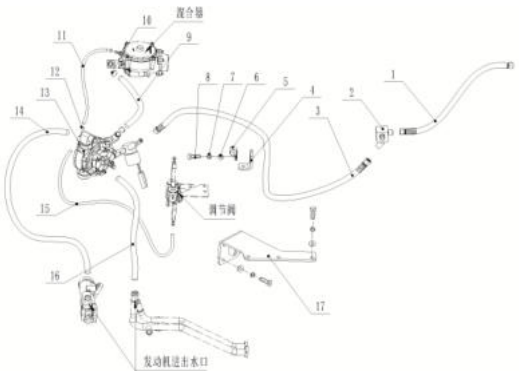

序号/NO	编码/SN	名称	Name	数量/QTY	备注/Remark
A	-	燃油转化装置及安装	Fuel oil conversion device and installation	1	现代双燃料
1	F030-GLH-7200005-A0	高压胶管	high pressure hose	1	
2	F030-GLH-7200004-A0	释压阀	RELIEF VALVES	1	
3	F030-GLH-7200003-A0	气管	trachea	1	
4	F030-GLHH-7200001-A0	支架	bracket	2	双燃料
5	951000100010	R型抱箍φ16	R hoop φ16	2	
6	910400100006	垫圈8GB/T-97.1-2002	Gasket 8	1	
7	910400500006	垫圈8GB/T93-1987	Gasket 8	1	
8	910100300022	螺栓M8×20GB/T5783-2000	Bolt M8% x20	1	
9	F030-GLHH-7200003-A0	压力调节阀-混合器胶管	Pressure regulator - mixer hose	1	
10	911000600013	喉箍14-27GB/T8870-2000	Hose hoops 14-27	6	
11	F030-GLHH-7200002-A0	混合器-压力调节阀胶管	Mixer - Pressure regulator hose	1	
12	911000600012	喉箍12-20GB/T8870-2000	Hose hoops 12 to 20	4	
13	F030-GLHH-7202000-A0	压力调节阀	pressure controlled valve	1	双燃料附件
14	F030-GLHH-7200004-A0	压力调节阀出水管	Pressure regulating valve outlet pipe	1	
15	F030-GLHH-7200005-A0	压力调节阀-燃料调节阀胶管	Pressure regulator - fuel regulator hose	1	
16	F030-GLHH-7200006-A0	压力调节阀进水管	Pressure regulating valve inlet pipe	1	
17	F030-GLHH-7201000-A0	压力调节阀支架	Pressure regulator support	1	双燃料

注：本页仅适用于现代双燃料发动机HYUNDA HMC2.4L

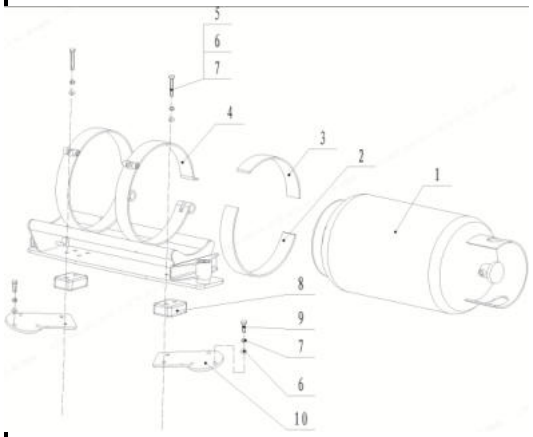

钢瓶及安装（LPG）/CYLINDERS AND INSTALLATION（LPG）(2.5-3.5t)					
序号/NO	编码/SN	名称	Name	数量/QTY	备注/Remark
A	-	钢瓶及安装	Cylinder and installation	1	现代单、双燃料
1	F030-GLH-7002000-A0	钢瓶	cylinder	1	LPG燃料
2	F030-GLH-7000004-A0	下紧固带隔套	Lower fastening belt septum	1	
3	F030-GLH-7000005-A0	上紧固带隔套	Upper fastening belt septum	1	
4	F030-GLH-7001000-A0	钢瓶支架	The cylinder bracket	1	
5	910100100034	螺栓GB5782-M10×55-8.8		10	
6	910400100007	平垫圈GB97.1-10-200HV		10	
7	910400500007	弹簧垫圈GB93-10		10	
8	F030-GLH-7000001-A0	橡胶块	rubber block	2	
9	910100300037	螺栓GB5783-M10×30-8.8	bolt M10×30	6	
10	F030-GLHH-7000002-A0	安装支架		2	

排气装置及安装/EXHAUSTSYSTEM(2.5-3.5t)

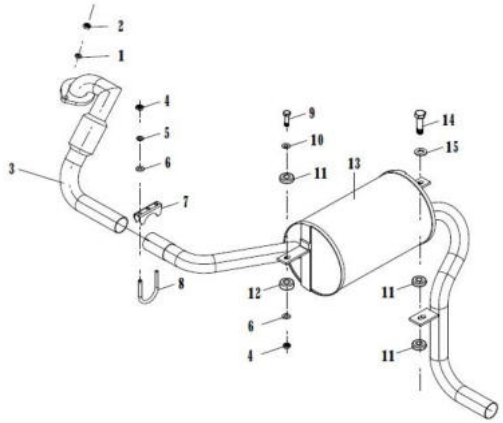

序号/NO	编码/SN	名称	Name	数量/QTY	备注/Remark
A	-	消音器及安装	Muffler Ass'y	1	
1	910400500007	垫圈10GB/T93-1987	Washer 10	1	
2	910300200002	螺母M10×1.25GB/T6171-2000	Nut M10×1.25	2	S4S-455
2	910300100007	螺母M10GB/T6170-2000	Nut M10	4	新柴
3	F030-DX-2301000-A0	排气管	Exhaust pipe	1	2.5-3.5t(新柴)
3	F030-DL-2302000-A0	排气管	Exhaust pipe	1	2.5-3.5t(S4S-455)
4	910300500004	螺母M8GB/T889.1-2000	Nut M8	2	
5	910400500006	垫圈8GB/T93-1987	Washer 8	2	
6	910400100006	垫圈8GB/T97.1-2002	Washer 8	4	
7	RF035-4-2300003-A0	卡板	Stopper	1	
8	RF035-4-2300004-A0	U型螺栓	U-Bolt	1	
9	RF035-4-2300001-A0	消音器螺栓	Muffler bolt	2	
10	910400500007	垫圈10GB/T93-1987	Washer 10	2	
11	F030-D-2300002-A0	橡胶垫	Rubber damper	4	
12	RF035-4-2300002-A0	橡胶垫（耐高温）	Rubber damper(Withstanding Heat)	2	
13	F020-DL-2301000-A0	消音器	Muffler	1	2-2.5TS4S-455、新柴
13	F030-DL-2301000-A0	消音器	Muffler	1	3-3.5TS4S-455、新柴
14	F030-D-2300001-A0	台阶螺栓	Step bolt	1	
15	910400100008	垫圈12GB/T97.1-2002	Washer 12	1	

排气装置及安装/EXHAUSTSYSTEM(2.5-3.5t)

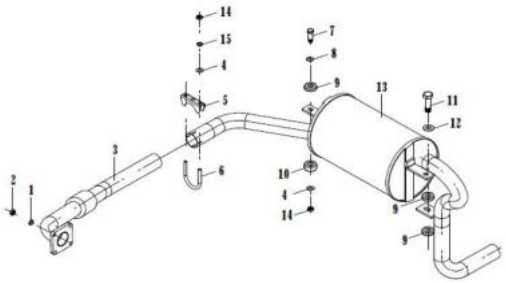

序号/NO	编码/SN	名称	Name	数量/QTY	备注/Remark
A	-	消音器及安装	Muffler Ass'y	1	YANMAR98
1	910400500006	垫圈8GB/T93-1987	Washer 8	4	
2	910300100006	螺母M8GB/T6170-2000	Nut M8	4	YANMAR98
3	F030-D-2302000-A0	排气管	Exhaust pipe	1	YANMAR98
4	910400100006	垫圈8GB/T97.1-2002	Washer 8	4	
5	RF035-4-2300003-A0	卡板	Stopper	1	
6	RF035-4-2300004-A0	U型螺栓	U-bolt	1	
7	RF035-4-2300001-A0	消音器螺栓	Muffler bolt	2	
8	910400200004	垫圈10GB/T96.1-2002	Washer 10	2	
9	F030-D-2300002-A0	橡胶垫	Rubber damper	4	
10	RF035-4-2300002-A0	橡胶垫	Rubber damper	2	
11	F030-D-2300001-A0	台阶螺栓	Step bolt	1	
12	910400100008	垫圈12GB/T97.1-2002	Washer 12	1	
13	F020-D-2301000-A0	消音器	Muffler	1	2.5t
13	F030-D-2301000-A0	消音器	Muffler	1	3-3.5t
14	910300100006	螺母M8GB/T6170-2000	Nut M8	2	
15	910400500006	垫圈8GB/T93-1987	Washer 8	2	

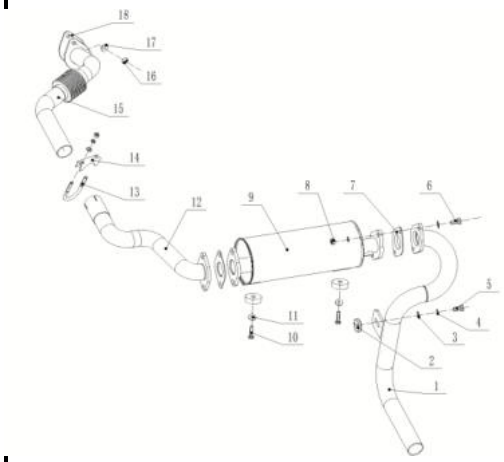

排气装置及安装/EXHAUSTSYSTEM(2.5-3.5t)					
序号/NO	编码/SN	名称	Name	数量/QTY	备注/Remark
A	-	消音器及安装	Muffler Ass'y	1	
1	F030-GLHH-2303000-A0	排气尾管III	Exhaust pipe III	1	现代双燃料
1	F030-DV-2303000-A0	排气管III	Exhaust pipe III	1	LS L4CRTV4
2	RF035-4-2300002-A0	橡胶垫	Rubber damper	3	
3	910400100006	垫圈 8GB/T97.1-2002	Gasket 8	7	
4	910400500006	垫圈 8GB/T93-1987	Gasket 8	7	
5	910100300024	螺栓M8×30GB/T5783-2000	Bolt M8% x30	1	
6	910100300025	螺栓M8×35GB/T5783-2000	Bolt M8% x35	4	
7	F030-GLHH-2300001-A0	密封垫	gasket	2	现代双燃料
8	910300100006	螺母M8GB/T6170-2000	Nut M8	4	
9	F030-GLHH-2302000-A0	后处理总成	After treatment assembly	1	现代双燃料
10	910100300040	螺栓M10×45GB/T5783-2000	Bolt M10% x45	2	
11	910400200004	垫圈 10GB/T96.1-2000	Gasket 10	2	
12	F030-GLHH-2301000-A0	排气管Ⅱ	Exhaust pipe II	1	现代双燃料
12	F030-DV-2302000-A0	排气管Ⅱ	Exhaust pipe II	1	LS L4CRTV4
13	RF035-4-2300004-A0	U型螺栓	U bolt	1	
14	RF035-4-2300003-A0	卡板	Stopper	1	
15	F030-GLH-2301000-A0	排气管Ⅰ	Exhaust pipe I	1	现代双燃料
15	F030-DV-2301000-A0	排气管Ⅰ	Exhaust pipe I	1	LS L4CRTV4
16	910300200002	螺母M10×1.25GB/T6171-2000	Nut x1.25 M10%	2	
17	910400500007	垫圈 10GB/T93-1987	Gasket 10	2	
18	F030-GLH-2300001-A0	密封垫	gasket	1	现代双燃料
18	F030-DV-2300001-A0	密封垫	gasket	3	LS L4CRTV4

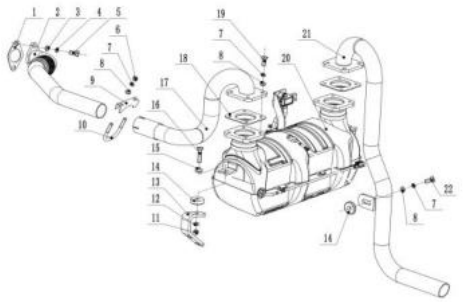

排气装置及安装/EXHAUSTSYSTEM(2.5-3.5t)					
序号/NO	编码/SN	名称	Name	数量/QTY	备注/Remark
A	-	消音器及安装	Muffler Ass'y	1	新柴欧五
1	F030-DC-2300001-A0	密封垫Ⅰ	gasket	1	发动机自带
2	F030-DC-2301000-A0	排气管Ⅰ	Exhaust pipe Ⅰ	1	
3	910400100007	垫圈 10GB/T97.1-2002	Washer 10	2	
4	910400500007	垫圈 10GB/T93-1987	Washer 10	2	
5	910100300036	螺栓M10×25GB/T5783-2000	Bolt M10×25	2	
6	910300100006	螺母M8GB/T6170-2000	Nut M8	2	
7	910400500006	垫圈 8GB/T93-1987	Washer 8	11	
8	910400100006	垫圈 8GB/T97.1-2002	Washer 8	11	
9	RF035-4-2300003-A0	卡板	Stopper	1	
10	RF035-4-2300004-A0	U型螺栓	U bolt	1	
11	910300500004	锁紧螺母M8GB/T889.1-2000	Nut M8	2	
12	910400200003	垫圈 8GB/T96.1-2002	Washer 8	2	
13	F030-DC-2300003-A0	支架	bracket	1	
14	RF035-4-2300002-A0	橡胶垫	Rubber damper	3	
15	910400200004	垫圈 10GB/T96.1-2002	Washer 10	2	
16	RF035-4-2300001-A0	消音器螺栓	Step bolt	2	
17	F030-DC-2302000-A0	排气管Ⅱ	Exhaust pipe Ⅱ	1	
18	F030-DC-2300002-A0	密封垫Ⅱ	gasket	2	发动机自带
19	910100300023	螺栓M8×25GB/T5783-2000	Bolt M8×25	8	
20	F030-DC-2303000-A0	后处理总成	After treatment assembly	1	发动机自带
21	F030-DC-2304000-A0	排气尾管	Exhaust pipe	1	
22	910100300024	螺栓M8×30GB/T5783-2000	Bolt M8×30	1	

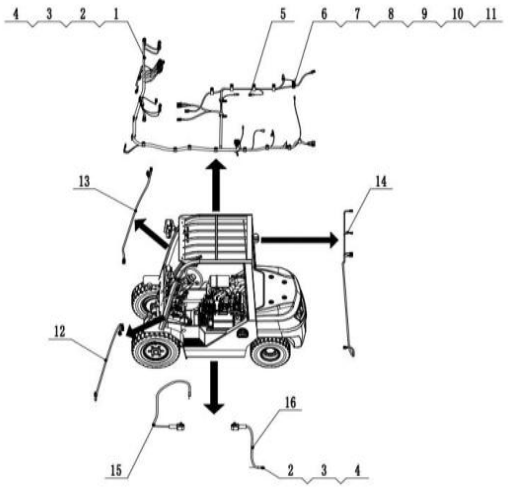

电气系统 / ELECTRICSYSTEM(2.5-3.5t)					
序号/NO	编码/SN	名称	Name	数量/QTY	备注/Remark
A	F030-D-2400000-A0	电气系统	Electrical	1	
1	F030-D-2401100-A0	主线束	Main wire harness	1	洋马
1	F030-DL-2401100-A0	主线束	Main wire harness	1	三菱S4S
1	F030-DX-2401100-B0	主线束	Main wire harness	1	新柴
1	F030-DV-2401100-A0	主线束	Main wire harness	1	LS
1	F030-LH-2401100-A0	主线束	Main wire harness	1	现代双燃料
1	F030-GLH-2401100-A0	主线束	Main wire harness	1	现代单燃料
1	F030-DC-2401100-A0	主线束	Main wire harness	1	新柴欧5
1			Main wire harness		新柴国四
2	910100300020	螺栓 M8×16GB/T5783-2000	Bolt M8×16	2	
3	910400100006	垫圈 8GB/T97.1-2002	Washer 8	2	
4	910400500006	垫圈 8GB/T93-1987	Washer 8	2	
5	RF035-4-2401101-A0	易熔线 50A	Fusible line 50A	1	主线束包含
6	951000100006	线夹 Φ25 FLT-R25	Harness clamp Φ25	10	
7	951000100013	线夹 Φ18FLT-R18	Harness clamp Φ18	7	
8	951000100001	线夹 Φ12FLT-R12	Harness clamp Φ12	3	
9	910100300009	螺栓 M6×12GB/T5783-2000	Bolt M6×12	20	
10	910400100005	垫圈 6GB/T97.1-2002	Washer 6	20	
11	910400500005	垫圈 6GB/T93-1987	Washer 6	20	
12	255034510002	左前灯线束	Front light harness (Left)	1	
13	255034510003	右前灯线束	Front light harness (Right)	1	
14	255034510004	尾灯线束	Back light harness	1	
15	RF035-4-2405100-A0	电瓶正极电缆	Battery positive cable	1	新柴、洋马、LS、现代
-	F030-DL-2405100-A0	电瓶正极电缆	Battery positive cable	1	三菱S4S
16	RF035-4-2406100-A0	电瓶负极电缆	Battery negative cable	1	新柴、洋马、LS、现代 新柴欧五

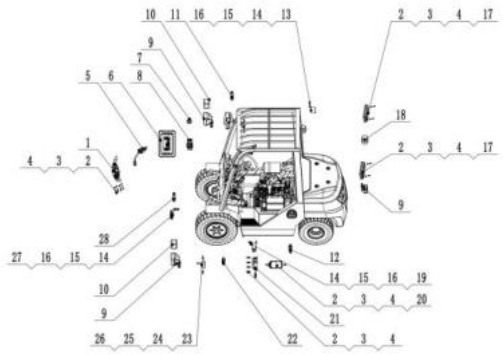

电气系统 / ELECTRICSYSTEM(2.5-3.5t)					
序号/NO	编码/SN	名称	Name	数量/QTY	备注/Remark
A	F030-D-2400000-A0	电气系统	Electrical	1	
1	F030-D-2408400-A0	组合开关	Shift&Light Lever	1	
2	910200500051	螺钉 M6×12GB/T818-2000	Screw M6×12	14	
3	910400100005	垫圈 6GB/T97.1-2002	Washer 6	14	
4	910400500005	垫圈 6GB/T93-1987	Washer 6	14	
5	F030-D-2408200-A0	钥匙开关	Key switch	1	
6	F030-D-2410100-A0	仪表总成FL-YMA001A	Display Combination	1	1.8T新柴、洋马、三菱
6	F030-DX-2410100-A0	仪表总成FL-YM001A		1	新柴欧五
6	F030-DV-2410100-A0	仪表总成H727		1	LS、现代
7	RF025-7-2410400-A0	USB插座	USB Outlet	1	
8	F030-D-2408100-A0	翘板开关组	Rocker Switch Assembly	1	
9	922000100001	大灯	Working Lamp	2	
10	922000100002	组合灯	Combination Light	2	
11	F030-D-2411200-A0	温度传感器	Temperature Sensor	1	变速箱
12	RF035-4-2411200-A0	温度传感器	Temperature Sensor	1	（新柴、洋马、三菱）发动机
13	RF035-4-2409400-A0	蜂鸣器	Buzzer	1	
14	910100300020	螺栓 M8×16GB/T5783-2000	Bolt M8×16	3	
15	910400100006	垫圈 8GB/T97.1-2002	Washer 8	3	
16	F030-D-2400000-A0	电气系统	Electrical	1	
17	922000100003	三色尾灯	Reverse Combination Light	2	
18	RF035-4-2407400-A0	警示灯	Flash Light	1	
19	393098533501	预热继电器	Pre-Heat Relay	1	
19	F030-DC-2410400-A0	继电器897-1AH-C-R1 M04 12VDC		1	新柴欧五
19	F030-DL-2410400-A0	时间继电器JQK1		1~2	新柴1；洋马1；新柴欧五2，S4S1个
19	F030-DV-2410400-A0	继电器MB141967		3	LS、现代
20	RF035-4-2410300-A0	OPS控制盒DH180G	OPS Controller	1	OPS功能专用
21	RF035-4-2410200-A0	电器盒	Relay&Fuse Box	1	
22	RF035-4-2408300-A0	刹车灯开关JK613B	Brake Switch	1	
23	RF035-4-2408500-A0	手刹开关	Handbrake Switch	1	
24	910200500021	螺钉 M4×10GB/T818-2000	Screw M4×10	2	
25	910400100003	垫圈 4GB/T97.1-2002	Washer 4	2	
26	910400500003	垫圈 4GB/T93-1987	Washer 4	2	
27	RF035-4-2409300-A0	喇叭	Horn	1	
28	RF035-4-2411100-A0	车速传感器	Speed Sensor	1	

传动装置安装(液力式)/DRIVEUNITASS'Y(TOR-CONTYPE)(2.5-3.5t)

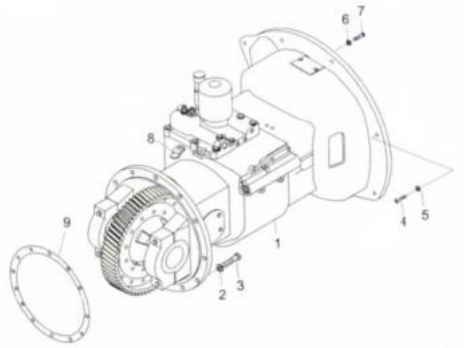

序号/NO	编码/SN	名称	Name	数量/QTY	备注/Remark
1	F030-D-1602000-A0	电液变速箱YQXD30	Transmission(Electro-hydraulic)	1	S4S LS YANMAR98
1	F030-DX-1601000-A0	电液变速箱YQXD30A	Transmission(Electro-hydraulic)	1	新柴
1	F030-GLH-1601000-A0	变速箱总成YDPA30E1	Transmission(Electro-hydraulic)	1	现代双燃料
2	910400500008	垫圈12GB/T93-1987	Washer 12	12	
3	910100200005	螺栓M12×1.25×40GB/T5785-2000	Bolt M12×1.25×40	12	
4	910100300022	螺栓M8×20GB/T5783-2000	Bolt M8×20	12	
5	910400500006	垫圈8GB/T93-1987	Washer 8	12	
6	910400500007	垫圈10GB/T93-1987	Washer 10	9	
7	910100300038	螺栓M10×35GB/T5783-2000	Bolt M10×35	9	
8	293098524249	管夹片	Clip	1	
9	RF035-2-1600001-A0	密封垫	Gear box seal gasket	1	2.5-3.5t

变速箱部分(I) /TRANSMISSION (I) (2.5-3.5t)

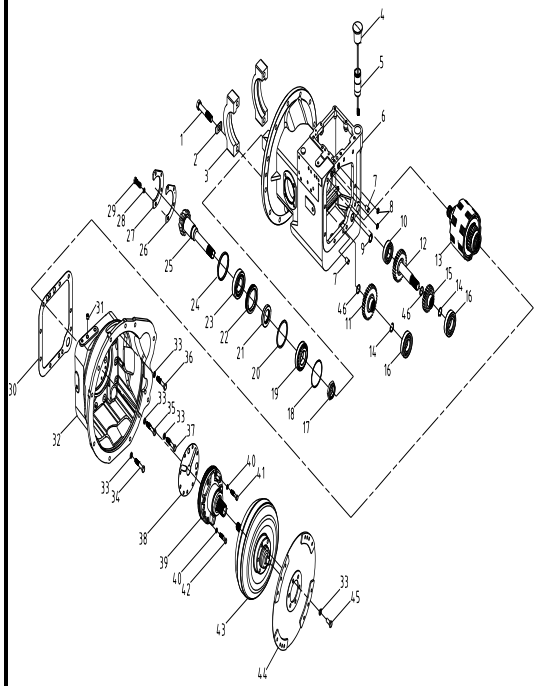

序号/NO	编码/SN	名称	Name	数量/QTY	备注/Remark
A	F030-DX-1602000-A0	变速箱总成YQXD30A	Gearbox Assembly YQXD30A	1	新柴
B	F030-D-1602000-A0	变速箱总成YQXD30	Gearbox Assembly YQXD30	1	洋马98，三菱S4S，新柴欧五 LS
1	293098524001	轴承座螺栓Y30H-01010	Bearing Seat Bolt Y30H-01010	4	
2	293098524002	轴承座锁片Y30H-01008	Bearing Seat Locking Plate Y30H-01008	4	
3	293098524003	轴承座Y30H-01002	Bearing Seat Y30H-01002	2	
4	293098524004	加油口盖Y30H-01007	Fuel Filter Lid Y30H-01007	1	
5	293098524005	加油管Y30H-01006-1	Fuel Filling Pipe Y30H-01006-1	1	
6	293098524006	液力箱体Y30H-01001-3	Hydraulic Box Y30H-01001-3	1	
7	293098524007	圆柱销A12*20GB119.1	Dowel pin A12*20GB119.1	2	
8	293098524008	O形圈15*2.4GB1235	O-ring 15*2.4GB1235	2	
9	293098524009	O形圈24*2.4GB1235	O-ring 24*2.4GB1235	1	
10	293098524010	深沟球轴承6206GB/T276	Deep Groove Ball Bearing 6206GB/T276	1	
11	293098524011	输出齿轮YQX37-03002	Output Gear YQX37-03002	1	
12	293098524012	惰轮轴Y30H-04001	Idler Shaft Y30H-04001	1	
13	293098524013	离合器总成Y30H-02000-3	Clutch Assembly Y30H-02000-3	1	
14	293098524014	弹性挡圈24GB893.1	Circlips 24GB893.1	2	
15	293098524015	惰轮YQX37-04002	Idler Gear YQX37-04002	1	
16	293098524016	深沟球轴承6207GB/T276	Deep Groove Ball Bearing 6207GB/T276	2	
17	293098524017	防松螺母Y30H-03009	Locknut Y30H-03009	1	
18	293098524018	液力输出轴垫片Y30H-03006	Hydraulic output shaft gasket	As needed	
19	293098524019	圆锥滚子轴承30208GB/T297	Taper Roller Bearing	1	
20	910800100008	O形圈80*3.1GB1235	O-Ring	1	
21	293098524020	油封Y30H-03007	Oil Seal	1	
22	293098524021	油封保持架Y30H-03003	Oil Seal Retainer	1	
23	293098524022	圆锥滚子轴承32208GB/T297	Taper Roller Bearing	1	
24	293098524023	轴环Y30H-03008	Collar	1	
25	293098524024	输出轴Y30H-03001A	Output Shaft	1	
26	293098524025	支承片垫片Y30H-03005	Supporting Plate Washer Y30H-03054	按需	
27	293098524026	支承片Y30H-03004	Supporting Plate Y30H-03004	1	
28	910400500006	弹簧垫圈8GB/T93	Spring Washer 8GB/T93	4	
29	910100300022	螺栓M8*20GB/T5783	Bolt M8*20GB/T5783	4	

变速箱部分(I) /TRANSMISSION (I) (2.5-3.5t)

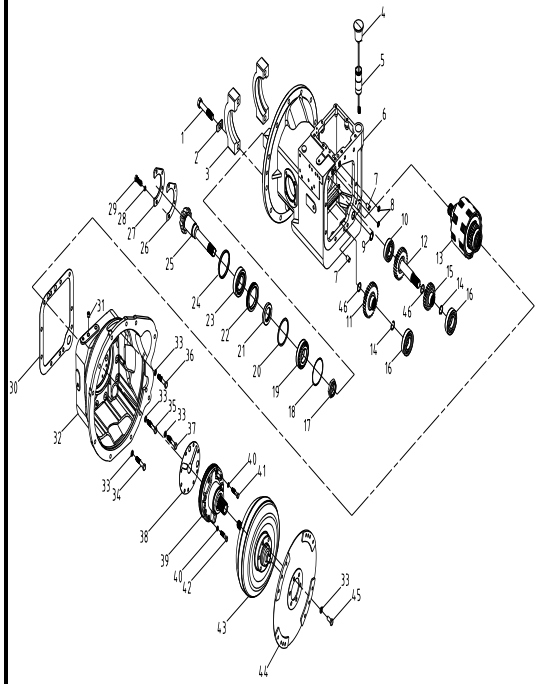

序号/NO	编码/SN	名称	Name	数量/QTY	备注/Remark
30	293098524027	变矩器壳衬垫Y30H-01004A	Torque Converter Housing Gasket	1	
31	293098524028	螺塞Rc1/4JB/ZQ4446	Plug Screw	3	
32	293098524029	变矩器壳Y30H-01003-1	Torque Converter Housing	1	
33	910400500006	弹簧垫圈10GB/T93	Spring Washer	15	
34	910100300037	螺栓M10*30GB/T5783	Bolt	4	
35	293098524030	螺栓M10*75GB/T5782	Bolt	1	
36	910100100033	螺栓M10*50GB/T5782	Bolt	1	
37	910100100034	螺栓M10*55GB/T5782	Bolt	3	
38	293098524031	供油泵衬垫Y30H-05002	Fuel Supply Pump Gasket	1	
39	293098524032	供油泵总成Y30H-05000	Fuel Supply Pump Assembly	1	
40	293098524033	螺栓衬垫Y30H-07007	Bolt Gasket	6	
41	910100100022	螺栓M8*40GB/T5782	Bolt	2	
42	910100100023	螺栓M8*45GB/T5782	Bolt	4	
43	293098524034	变矩器组件Y30H-06100-1	Torque Converter Unit	1	YQXD30
43	293098524035	变矩器组件Y30H-06100	Torque Converter Unit	1	YQXD30A
44	293098524036	输入板组件Y30H-06200	Input Board Unit	1	
45	293098524037	螺栓M10*1.25*15GB/T5786	Bolt	6	
46	293098524038	限位弹簧Y30H-03010	Limit Spring	2	

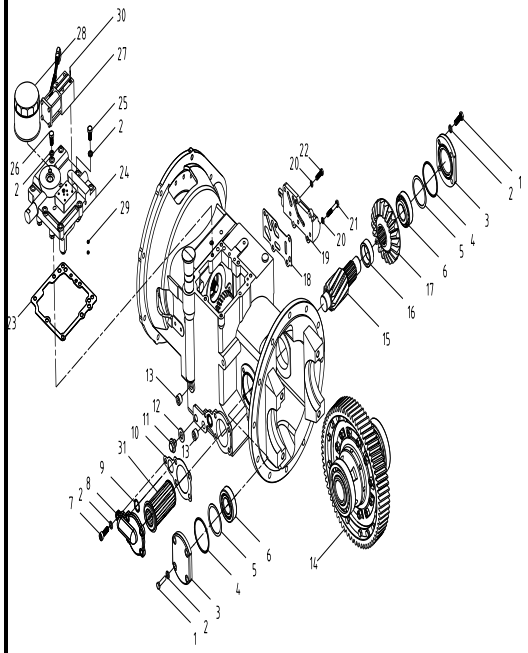

变速箱部分(Ⅱ) /TRANSMISSION (Ⅱ)(2.5-3.5t)

序号/NO	编码/SN	名称	Name	数量/QTY	备注/Remark
1	293098524038	螺栓M10*25GB/T5783	bolt	8	
2	293098524039	弹簧垫圈10GB/T93	spring washer	21	
3	293098524040	轴承盖Y30H-09001	bearing cap	2	
4	255098524005	O形圈75*3.1GB1235	O-ring	2	
5	293098524041	齿轴垫片Y30H-09002	Gear shaft gasket	As needed	
6	251098524006	圆锥滚子轴承32207GB/T297	Taper roller bearing	2	
7	910200200076	螺钉M10*25GB/T70.1	bolt	5	
8	293098524042	外置粗滤器壳Y30H-01101A	External coarse filter shell	1	
9	293098524043	O形圈28*2.4GB1235	o-ring	1	
10	293098524057	粗滤器衬垫Y30H-01013	coarse filter gasket	1	
11	293098524045	放油螺塞Y30H-01011	drain plug	1	
12	293098524046	组合密封垫JB/T982 16A	Combined Gasket	1	
13	293098524047	螺塞Rc1/2JB/ZQ4446	Plug Screw	2	
14	293098524048	差速器总成Y30H-10000	Differential Assembly	1	
15	293098524049	齿轴Y30H-09003	Gear Shaft	1	
16	293098524050	齿轴衬套Y30H-09004	Gear Shaft Bushing	1	
17	293098524051	螺旋伞齿轮Y30H-09005	Spiral Bevel Gear	1	
18	293098524052	微动阀衬垫Y30H-08010-1A	Micro-Valve Gasket	1	
19	293098524053	微动阀总成Y30H-08000-1B	Micro-Valve Assembly	1	
20	910400500006	弹簧垫圈8GB/T93	Spring Washer	5	
21	910100100024	螺栓M8*50GB/T5782	Bolt	2	
22	910100300023	螺栓M8*25GB/T5783	Bolt	3	
23	293098524053	壳体盖衬垫Y30H-07015	Shell Cover Gasket	1	
24	293098524054	电液控制阀体Y30H-D07200	Electro-Hydraulic Valve Body	1	
25	293098524055	螺栓M10*40GB/T5782	Bolt	6	
26	910100100034	螺栓M10*55GB/T5782	Bolt	2	
27	293098524056	电磁阀Y30H-D07300	Solenoid Valve	1	
28	293098524044	滤清器(Ⅱ)Y30H-07010	Filter(Ⅱ)	1	
29	293098524058	O形圈9*1.9GB1235	O-Ring	2	
30	910200200029	螺钉M5×45GB/T70.1	Bolt	4	
31	293098524059	滤网组件Y30H-01102A	Strainer	1	

离合器总成/CLUTCH ASSEMBLY(2.5-3.5t)

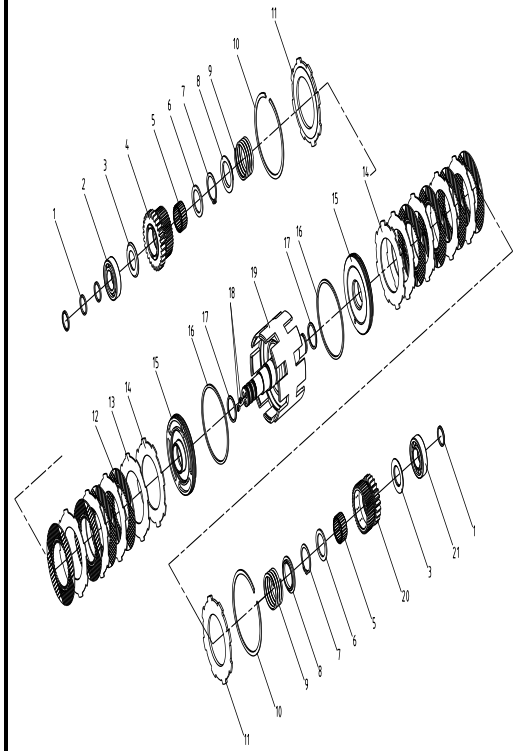

序号/NO	编码/SN	名称	Name	数量/QTY	备注/Remark
1	293098524060	密封环AY30H-02009	sealing ring	4	
2	293098524010	深沟球轴承6206GB/T276	Deep Groove Ball Bearing	1	
3	293098524061	止推环BY30H-02006	Thrust ring	2	
4	293098524062	倒档齿轮Y30H-02002	Reverse gear	1	
5	293098524063	滚针轴承K35*42*20JB/T7918		2	
6	293098524064	止推环AY30H-02005A	Retaining Ring	2	
7	910401300020	弹性挡圈40GB/T894.1	Snap Ring	2	
8	293098524065	弹簧座Y30H-02004	Spring Seat	2	
9	293098524066	回程弹簧Y30H-02003	Return Spring	2	
10	293098524067	卡环Y30H-02011A	Snap Ring	2	
11	293098524068	端板Y30H-02012	End Plate	2	
12	293098524069	摩擦片Y30H-02007	Friction Plate	8	
13	293098524070	隔片Y30H-02008	Spacer	8	
14	293098524071	蝶形弹簧Y30H-02013	Belleville Spring	2	
15	293098524072	活塞总成Y30H-02200	Piston Assembly	2	
16	293098524073	密封环BY30H-02010	Sealing Ring	2	
17	910800100056	O形圈40*3.5GB1235	O-Ring	2	
18	910200900012	螺钉M8*8GB/T78	Bolt	2	
19	293098524074	输入轴总成Y30H-02100-2	Input Shaft Assembly	1	
20	293098524075	前进档齿轮Y30H-02001	Forward Gear	1	
21	293098524076	圆柱滚子轴承NJ206E GB/T283	Taper Roller Bearing	1	

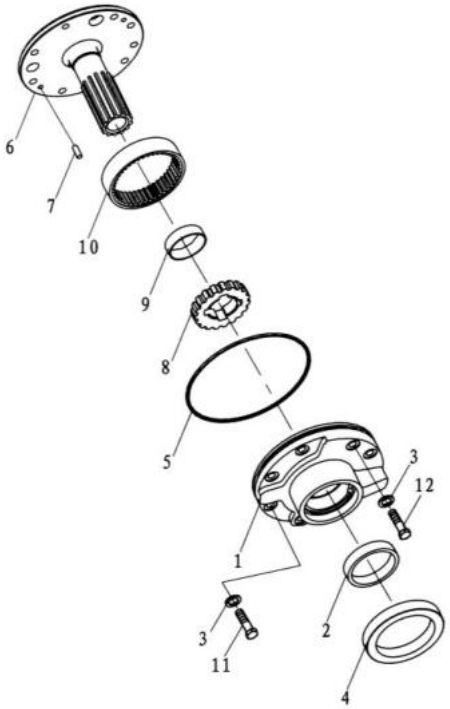

供油泵总成 /OIL PUMP ASSEMBLY(2.5-3.5t)

序号/NO	编码/SN	名称	Name	数量/QTY	备注/Remark
1	293098524077	泵体Y30H-05101	Pump Body	1	
2	293098524078	衬套Y30H-05102	Bushing	1	
3	293098524033	螺栓衬垫Y30H-07007	Bolt Gasket	2	
4	293098524079	油封Y30H-05004	Oil Seal	1	
5	293098524080	O形密封圈Y30H-05005	O-Ring Seal	1	
6	293098524081	锭子Y30H-05001	Spindle	1	
7	293098524082	圆柱销B6×16GB119	Dowel Pin	2	
8	293098524083	主动齿轮Y30H-05201	Driving Gear	1	
9	293098524084	衬套Y30H-05202	Bushing	1	
10	293098524085	被动齿轮Y30H-05003	Driven Gear	1	
11	910100300023	螺栓M8×25GB5783	Bolt	1	
12	910100300025	螺栓M8×35GB5783	Bolt	1	

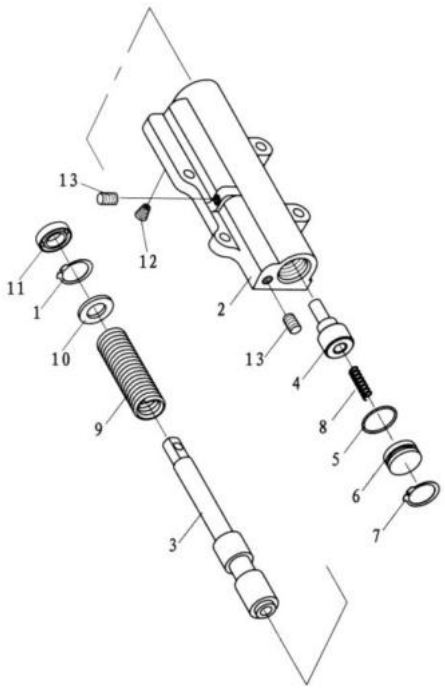

微动阀总成/INCHING VALVE ASSEMBLY(2.5-3.5t)

序号/NO	编码/SN	名称	Name	数量/QTY	备注/Remark
1	293098524014	挡圈30 GB893.1	Retaining Ring	1	
2	293098524086	阀体Y30H-08001	valve body	1	
3	293098524087	阀杆Y30H-08002	Valve Body	1	
4	293098524088	滑阀Y30H-08003	Slide Valve	1	
5	293098524089	O形圈28×2.65GB1235	O-Ring	1	
6	293098524090	油堵Y30H-08004	Oil Plug	1	
7	293098524091	挡圈28GB893.1	Retaining Ring	1	
8	293098524092	微动弹簧（Ⅱ）Y30H-08006	Micro Spring（Ⅱ）	1	
9	293098524093	微动弹簧（Ⅰ）Y30H-08005	Micro Spring（Ⅰ）	1	
10	293098524094	堵块Y30H-08007	Blocking	1	
11	293098524095	油封φ30×φ16×7Y30H-08008	Oil Seal	1	
12	293098524096	油塞Y30H-08009	Oil Lcok	1	
13	293098524097	螺塞ZG1/8″ JB/ZQ4446-86	Plug Screw	2	

差速器总成/DIFFERENTIAL ASSEMBLY(2.5-3.5t)

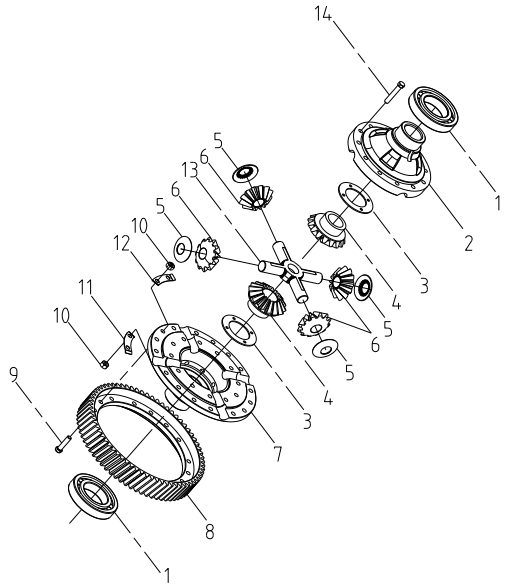

序号/NO	编码/SN	名称	Name	数量/QTY	备注/Remark
1	256898524016	深沟球轴承6213 GB/T276	Deep Groove Ball Bearing	2	
2	293098524098	左差速器壳Y30H-10002	Left differential housing	1	
3	293098524099	半轴垫圈Y30H-10006	Half shaft washer	2	
4	293098524100	半轴齿轮Y30H-10007	Half shaft washer	2	
5	293098524101	行星垫圈Y30H-10004	Xingxing Washer	4	
6	293098524102	行星齿轮Y30H-10005	Xingxing Gear	4	
7	293098524103	右差速器壳Y30H-10001	Right Differential Housing	1	
8	293098524104	齿圈Y30H-10012	Ring Gear	1	
9	293098524105	齿圈螺栓Y30H-10010A	Ring Gear Bolt	16	
10	293098524106	螺母M10*1.25GB/T6171	Nut	28	
11	293098524107	差壳锁片Y30H-10009A	Differential Housing Locking Plate	6	
12	293098524108	齿圈锁片Y30H-10011A	Ring Gear Locking Plate	8	
13	293098524109	十字轴Y30H-10003	Cross Axle	1	
14	293098524110	差壳螺栓Y30H-10008A	Differential Housing Bolt	12	

变速箱（Ⅰ）YDPA30/TRANSMISSION(Ⅰ)YDPA30(2.5-3.5t)

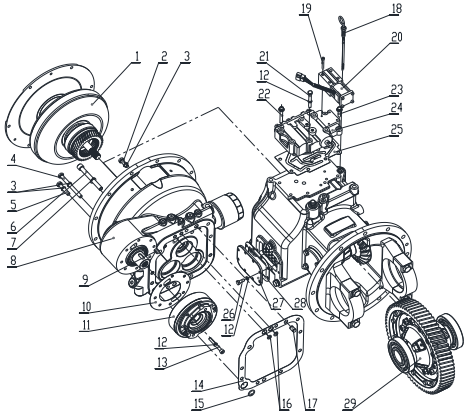

序号/NO	编码/SN	名称	Name	数量/QTY	备注/Remark
1	293098524111	变矩器总成YDPA30-06000	Hyraulic torque converter	1	配现代发动机
2	910100300037	螺栓M10*30 GB/T5783	Bolt	5	
3	910400500007	弹簧垫圈10 GB/T93	Washer	8	
4	910100100043	螺栓M10*110 GB/T5782	Bolt	2	
5	910100300041	螺栓M10*50 GB/T5783	Bolt	1	
6	910200200091	螺钉M12*110 GB/T70	Bolt	1	
7	293098524112	紫铜垫圈YDPA30-01021	Washer	1	
8	293098524113	变矩器壳体部件YDPA30-01800	Tor-con housing	1	
9	293098524114	键YDPA30-01018	Spline	1	
10	293098524115	油泵纸垫YDPA30-05005	Oil pump pad	1	
11	293098524116	供油泵总成YDPA30-05000	Oil pump ass'y	1	
12	910400500006	弹簧垫圈8 GB/T93-87	Washer	18	
13	910200200066	螺钉M8*65 GB/T70	Bolt	8	
14	293098524117	变矩器壳体纸垫YDPA30-01004	Paper pad	1	
15	910800100040	O型圈24*2.4 GB1235	O-ring	1	
16	910800100053	O型圈15*2.4 GB1235	O-ring	2	
17	910600100035	圆柱销A12*20 GB/T119	Cylindrical pin	2	
18	293098524118	油尺组件YDPA30-01014	Oiling cap	1	
19	910200200029	螺钉M5*45 GB/T70	Bolt	4	
20	293098524119	电磁阀Y30H-07300	Solenoid valve	1	
21	910100100027	螺栓M8*65 GB/T5782	Bolt	2	
22	293098524120	螺栓M8*60 GB/T5789	Bolt	4	
23	293098524121	螺栓M8*30 GB/T5789	Bolt	4	
24	293098524122	控制阀总成SDT30-07200-2	Control valve	1	
25	293098524123	控制阀纸垫SDT30-07015	Paper pad	1	
26	910100300022	外螺栓M8*20 GB/T5783	Bolt	8	
27	293098524124	盖板YDPA30-01024	Protection cover	1	
28	293098524125	纸垫YDPA30-01025	Paper pad	1	
29	293098524048	差速器总成Y30H-10000	Differential	1	

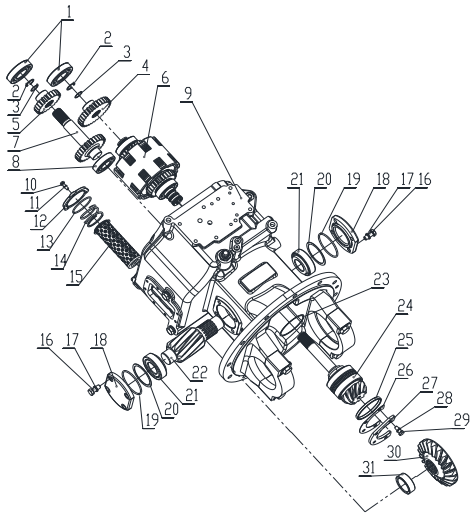

变速箱（Ⅱ）/TRANSMISSION(Ⅱ)(2.5-3.5t)

序号/NO	编码/SN	名称	Name	数量/QTY	备注/Remark
1	910700200022	轴承6207 GB/T276	Bearing	2	
2	910401400033	弹性挡圈24 GB/T893.1	Elastic collar	2	
3	293098524038	限位弹簧Y30H-03010	Spring restrict	2	
4	293098524011	输出齿轮YQX37-03002	Output gear	1	
5	293098524015	惰轮YQX37-04002	Idler Wheel	1	
6	293098524126	离合器总成Y30H-0200-2	Clutch ass'y	1	
7	293098524012	惰轮轴Y30H-04001	Idler shaft	1	
8	910700200021	轴承6206 GB/T276	Bearing	1	
9	293098524127	箱体部件YDPA30-01900	Gearbox casing	1	
10	910100300011	螺栓M6*20 GB/T5783	Bolt	3	
11	910400500005	弹垫6 GB/T93-87	Washer	3	
12	293098524128	粗滤器壳YDPA30-01015	Coarse strainer shell	1	
13	293098524129	O型圈56*2.65 GB/T3452.1	O-ring	1	
14	293098524130	滤网安装弹簧YDPA30-01016	Spring	1	
15	293098524131	滤网组件YDPA30-01017	Strainer	1	
16	910100300036	螺栓M10*25 GB/T5783	Bolt	8	
17	910400500007	弹垫10 GB/T93	Washer	8	
18	293098524132	轴承盖Y30H-09001-1	Bearimg cap	2	
19	910800100032	O型圈75*3.1 GB1235	O-ring	2	
20	293098524041	齿轴垫片Y30H-09002	Gear shaft gasket	按需	
21	251098524006	圆锥滚针轴承32207 GB/T297	Bearing	2	
22	293098524049	齿轴Y30H-09003	Gear shaft	1	
23	293098524018	输出轴垫圈Y30H-03006	washer	按需	
24	293098524133	输出轴组件Y30H-03001B	Shaft,output	1	
25	293098524023	轴环Y30H-03008	Shaft collar	1	
26	293098524025	支承片垫片Y30H-03005	washer	按需	
27	293098524026	支承片Y30H-03004	Bearing support plate	1	
28	910400500006	弹簧垫圈8 GB/T93	Washer	4	
29	910100300022	螺栓M8*20 GB/T5783	Bolt	4	
30	293098524051	螺旋伞齿轮Y30H-09005	Spiral bevel gear	1	
31	293098524050	齿轴衬套Y30H-09004	Bushing	1	

变速箱壳体部件/GEARBOX HOUSING(2.5-3.5t)

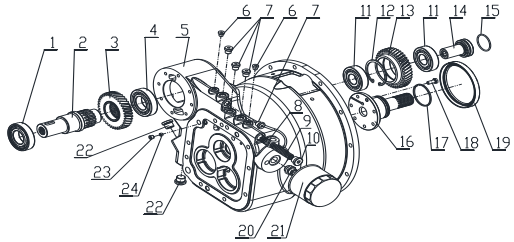

序号/NO	编码/SN	名称	Name	数量/QTY	备注/Remark
1	910700200023	轴承6208-RS GB/T276	Bearing	1	
2	293098524134	油泵驱动轴YDPA30-01010	Shaft	1	
3	293098524135	油泵驱动齿轮YDPA30-01011	Gear	1	
4	910700200023	轴承6208 GB/T276	Bearing	1	
5	293098524136	变矩器壳体YDPA30-01003	Tor-con housing	1	
6	293098524137	油口螺塞OM10	Screw plug	2	
7	293098524138	油口螺塞OM14	Screw plug	4	
8	293098524139	变矩器溢流阀活塞YDPA30-01022	Piston	1	
9	293098524140	变矩器溢流阀弹簧YDPA30-01023	Spring	1	
10	293098524141	油口螺塞OM18	Screw plug	1	
11	910700200032	轴承6306 GB/T276	Bearing	2	
12	910401400021	弹性挡圈72 GB/T893.1	Elastic collar	1	
13	293098524142	惰轮YDPA30-01009	Gear.idler	1	
14	293098524143	惰轮轴YDPA30-01008	Shaft,idler	1	
15	293098524144	O型圈45*2.65 GB/T3452.1	O-ring	1	
16	293098524145	导轮座YDPA30-01005	Guiding gear seat	1	
17	293098524146	密封环（65）YDPA30-01012	Sealing ring	1	
18	910100300022	螺栓M8*20 GB/T5783	Bolt	7	
19	293098524147	油封YDPA30-01020	Oil seal	1	115*130*10
20	293098524044	滤清器(Ⅱ)Y30H-07010	Filter	1	
21	293098524149	管接头Y30H-07002	Connector	1	
22	293098524150	油口螺塞OM20	Screw plug	1	
23	293098524151	螺塞R1/8 JB/ZQ4446	Screw plug	1	
24	293098524152	润滑油孔螺塞YDPA30-01019	Screw plug	1	M8*6

箱体部件/TRANSMISSION(2.5-3.5t)

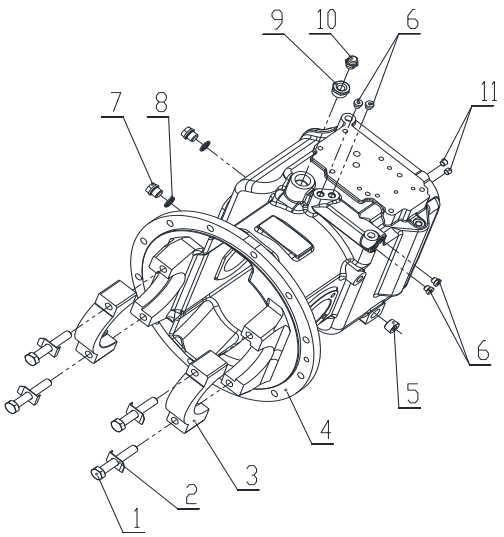

序号/NO	编码/SN	名称	Name	数量/QTY	备注/Remark
1	293098524001	轴承座螺栓Y30H-01010	Bolt	4	
2	293098524002	锁片Y30H-01008	Lock plate	4	
3	293098524003	轴承座Y30H-01002	Bearing seat	2	
4	293098524153	箱体YDPA30-01001	Gearbox casing	1	
5	293098524154	螺塞R1/2JB/ZQ4446	Screw plug	1	
6	293098524137	油口螺塞OM10	Screw plug	4	
7	293098524045	放油螺塞Y30H-01011	Screw plug	2	
8	910800900005	组合垫圈16 JB982	Combination washer	2	
9	293098524155	通气帽转接头4F35-01009	Connector	1	
10	293098524156	通气帽FSDT30-07014	Vent cap	1	

差速器总成/DIFFERENTIAL ASSEMBLY(2.5-3.5t)

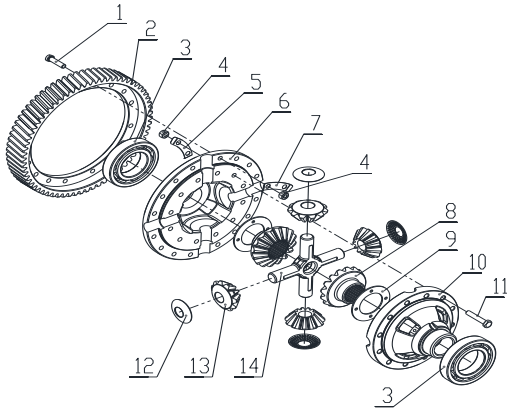

序号/NO	编码/SN	名称	Name	数量/QTY	备注/Remark
1	293098524105	齿圈螺栓Y30H-10010A	Bolt	16	
2	293098524104	齿圈Y30H-10012	Gear washer	1	
3	256898524016	轴承6213 GB/T276-94	Bearing	2	
4	910300200002	螺母M10*1.25 GB/T6171	NUT	28	
5	293098524157	差壳锁片Y30H-1009A	Lock plate	6	
6	293098524103	右差速器壳Y30H-10001	Differential housing	1	
7	293098524108	齿圈锁片Y30H-10011A	Lock plate	8	
8	293098524100	半轴齿轮Y30H-10007	Half axle gear	2	
9	293098524099	半轴垫圈Y30H-10006	Gear washer	2	
10	293098524098	左差速器壳Y30H-10002	Differential housing	1	
11	293098524110	差壳螺栓Y30H-10008A	Bult	12	
12	293098524101	行星垫圈Y30H-10004	Washer	4	
13	293098524102	行星齿轮Y30H-10005	Planetary gear	4	
14	293098524109	十字轴Y30H-10003	Cross shaft	1	

离合器总成/CLUTCH ASSEMBLY(2.5-3.5t)

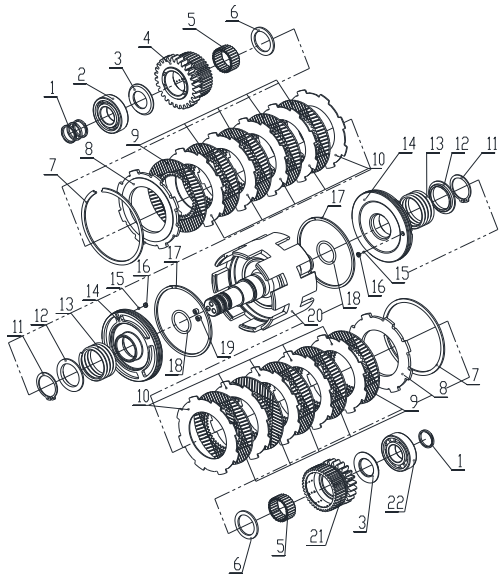

序号/NO	编码/SN	名称	Name	数量/QTY	备注/Remark
1	293098524060	密封环AY30H-02009	Sealing ring	4	
2	910700200021	轴承6206 GB/T276	Bearing	1	
3	293098524061	止推环BY30H-02006	Thrust ring (B)	2	
4	293098524075	前进档齿轮Y30H-02001	Forward gear	1	
5	293098524063	滚针轴承K35*42*20 JB/T7918	Bearing	2	
6	293098524064	止推环AY30H-02005	Thrust ring (A)	2	
7	293098524067	卡环Y30H-02011A	Snap ring	2	
8	293098524068	端板Y30H-02012	End plate	2	
9	293098524069	摩擦片Y30H-02007	Friction plate	10	
10	293098524070	隔片Y30H-02008	Spacer	10	
11	910401300020	弹性挡圈4040 GB/T894.1	Elastic collar	2	
12	293098524065	弹簧座Y30H-02004	Spring seat	2	
13	293098524158	回位弹簧Y30H-02003	Spring	2	
14	293098524159	活塞Y30H-02201	Piston	2	
15	293098524160	钢球3.175 GB/T308-77	Steel ball	2	
16	293098524161	塞Y30H-02202	Screw plug	2	
17	293098524073	密封环BY30H-02010	Sealing ring	2	
18	910800100070	O型圈40*3.5 GB1235	O-ring	2	
19	910200900012	螺钉M8*8 GB/T78	Bolt	2	
20	293098524074	输入轴总成Y30H-02100-2	Input shaft ass’y	1	
21	293098524062	倒档齿轮Y30H-02002	Gear	1	
22	293098524076	圆柱滚子轴承NJ206 GB/T283	Bearing	1	

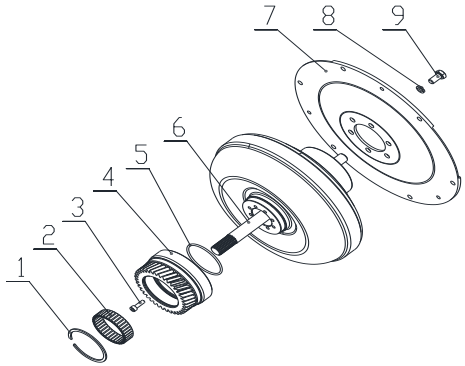

变速箱/TRANSMISSION(TOR-CONTYPE)(2.5-3.5t)

序号/NO	编码/SN	名称	Name	数量/QTY	备注/Remark
1	293098524162	轴承挡圈YDPA30-01013	Snap ring	1	
2	293098524163	滚针轴承K65*73*20 JB/T7918	Bearing	1	
3	293098524164	螺钉M6*20GB/T70	Bolt	8	
4	293098524165	变矩器齿轮组件YDPA30-06910	Gear	1	
5	293098524166	O型圈67*2.65 GB/T3452.1	O-ring	1	
6	293098524167	变矩器组件YDPA30-06100	Hyraulic torque converter	1	
7	293098524168	弹性板Y30H-06200-4	Plate	1	
8	910400500007	弹垫10 GB/T93	Washer	6	
9	910400400002	螺栓M10*1.25*18 GB/T5786	Bolt	6	

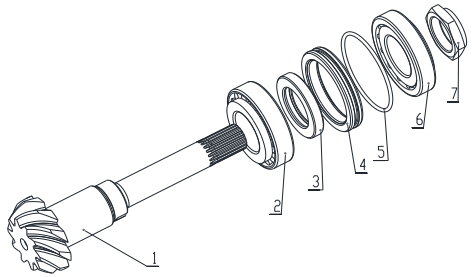

输出轴组件/OUTPUT SHAFTASSEMBLY(2.5-3.5t)

序号/NO	编码/SN	名称	Name	数量/QTY	备注/Remark
1	293098524024	输出轴Y30H-03001A	Shaft,output	1	
2	293098524022	圆锥滚针轴承32208GB/T297	Bearing	1	
3	293098524020	油封Y30H-03007	Oil seal	1	
4	293098524021	油封保持架Y30H-03003	Oil seal retainer	1	
5	910800100008	O型圈80*3.1 GB1235	O-ring	1	
6	293098524019	圆锥滚针轴承30208 GB/T297	Bearing	1	
7	293098524017	防松螺母Y30H-03009	Nut	1	

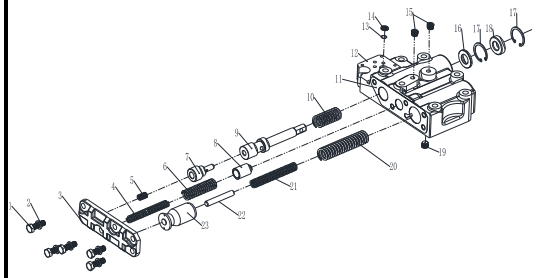

变速箱/TRANSMISSION(TOR-CONTYPE)(2.5-3.5t)					
序号/NO	编码/SN	名称	Name	数量/QTY	备注/Remark
1	910100300022	外六角螺栓M8x20GB/T5783-2000	Bolt	5	
2	910400500006	弹垫8GB/T93-87	Washer	5	
3	293098524169	中柴端盖105300000630	Bearing cap	1	
4	293098524170	主调压内谈话（短）100551000740	Spring	1	
5	293098524171	补偿弹簧100554000690	Spring	1	
6	293098524172	主调压外弹簧100554000750	Spring	1	
7	293098524173	微动滑阀100651000530	Inching slide valve	1	
8	293098524174	活塞100651000030	Piston	1	
9	293098524175	微动阀杆100651000540	Inching valve rod	1	
10	293098524176	回位弹簧100554000660	Spring	1	
11	293098524177	端盖密封垫101300000680	Seal cushion	1	
12	293098524178	阀体101150000190	Valve body	1	
13	910800100047	O型密封圈12*1.9GB/T1235-76	O-ring12*1.9	1	
14	293098524179	电磁阀过滤网105500000010	Strainer net	1	
15	293098524180	螺塞Rc1/8JB/ZQ4446	Screw plug	2	
16	293098524181	垫片100652000090	Washer	1	
17	910401400008	孔用弹性挡圈30GB/T893.1-86	Snap ring 30	1	
18	293098524182	骨架式油封14*30*891503000170	Oil seal 14*30*8	1	
19	293098524183	油塞（1.2）100652001040	Screw plug	1	
20	293098524184	缓冲阀大弹簧100554000730	Spring	1	
21	293098524185	缓冲阀小弹簧100554000720	Spring	1	
22	293098524186	定位杆100652001120	Rod	1	
23	293098524187	缓冲阀芯100651001180	Valve core	1	

2.5t驱动桥/2.5tDRIVEAXLE

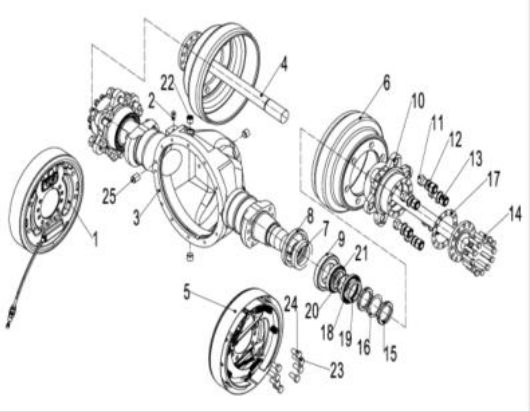

序号/NO	编码/SN	名称	Name	数量/QTY	备注/Remark
A	F020-D-1601000-A0	驱动桥总成G-2300000-04		1	
1	256798523501	左制动器G-3501100-00	Left brake	1	
2	256898523516	透气塞H-2301301-00	Vent plug	1	
3	256798523502	驱动桥壳G-2301101-04	Driving axle housing	1	
4	256798523503	半轴G-2303101-04	Half shaft	2	
5	256798523504	右制动器G-3501200-00	Right brake	1	
6	256798523505	制动鼓G-3103103-00	Drum brake	2	
7	256898523504	大油封座圈H-3103102-00	Large oil seal ring	2	
8	256898523505	油封100X130X12	Seal ring100x130x12	2	
9	256898523506	圆锥滚子轴承30214	Bearing30214	2	
10	256798523506	轮毂G-3103101-04	Hub	2	
11	910300200005	六角螺母M20X1.5	Nut M20X1.5	12	
12	256798523507	轮毂螺栓G-3103106-00	Hub bolt	12	
13	256798523508	轮毂螺母G-3103110-04	Hub nut	12	
14	256898523510	半轴螺栓H-2303107-00	Half shaft bolt	24	
15	910300700005	圆螺母M60X2	Round nut M60X2	4	
16	910400900013	止动垫圈60	Lock washer60	2	
17	256798523509	半轴垫G-2303106-00	Half shaft pad	2	
18	254198523555	油封75X100X10	Seal ring 75x100x2	2	
19	256898523507	小油封座圈H-3103109-00	Small oil seal ring	2	
20	254198523557	O型圈65X3.1	O-ring 65X3.1	2	
21	910700600020	圆锥滚子轴承32012	Bearing32012	2	
22	256898523515	堵塞ZG1/2 H-1701104-00	Pug ZG1/2	3	
23	256898523518	制动器定位螺栓H-3501301-00	Brake positioning bolt	4	
24	256898523519	制动器紧固螺栓H-3501302-00	Brake bolt	12	
25	256898523517	圆柱销	Pin	1	
26	256798523509	主减密封垫H-23022101	Main reduction gasket	1	

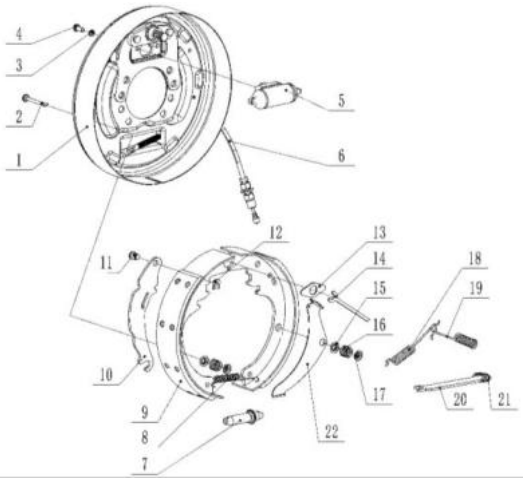

2.5t制动器/LEFT BRAKE(25-28Q)

序号/NO	编码/SN	名称	Name	数量/QTY	备注/Remark
1	256798523530	左制动器底板总成23653-730111*L	Brake base plate assembly 23653-73011	1	左制动器L
1	256798523531	右制动器底板总成23653-730111*R	Brake backing plate assembly (right)	1	右制动器R
2	256798523532	压簧拉杆23653-72101	Spring tension rod 23653-72101	4	
3	910400500018	弹簧垫圈GB93-6	Spring washer GB93-6	2	
4	910100300020	螺栓GB5782-M8x16	Bolt GB5782-M8x16	2	
5	256798523533	制动分泵总成22373-72041*L	Brake wheel cylinder assembly 22373-72041*L	1	左制动器L
5	256798523554	制动分泵总成22373-72041*R	Brake wheel cylinder assembly 22373-720411*R	1	右制动器R
6	256798523534	左钢索总成OC11246-14603*L	Brake cable assembly OC11246-14603	1	左制动器L
6	256798523535	右钢索总成OC11246-24603*R	Brake cable assembly right OC11246-24603	1	右制动器R
7	256798523536	间隙调整器23653-72041	Clearance adjuster 23653-72041	1	
8	256798523537	弹簧23653-72051	Spring 23653-72051	1	
9	256798523538	左摩擦片总成23653-73021*L	Friction plate assembly 23653-73021	2	左制动器L
9	256798523539	右摩擦片总成23653-73021*R	Friction plate assembly (right)	1	右制动器R
10	256798523540	左手制动拉杆23653-72071C*L	Hand brake rod 23653-72071C	1	左制动器L
10	256798523541	右手制动拉杆23653-72071C*R	Hand brake rod (right)	1	右制动器R
11	256798523542	支撑销22673-72231	Support pin 22673-72231	1	
12	256798523543	弹性垫片24433-70160G	Elastic gasket 24433-70160G	1	
13	256798523544	垫片23653-72131	Gasket 23653-72131	1	
14	256798523545	顶杆23653-72161	Push rod 23653-7261	1	
15	256798523546	压簧座23653-72121	Pressure spring seat 23653-72121	4	
16	256798523547	弹簧23653-72091	Spring 23653-72091	4	
17	256798523548	压簧盖23653-72111	Spring compression cover 23653-72111	4	
18	256798523549	回位弹簧23673-72261	Return spring 23673-72261	1	
19	256798523550	拉簧2353-72171	Tension spring 2353-72171	1	
20	256798523551	手制动推杆23653-72081	Hand brake push rod 23653-72081	1	
21	256798523553	压缩弹簧23673-72391	Compression spring 23673-72391	1	
22	256798523555	调整杠杠左23653-72151*L	Lever-left	1	左制动器L
22	256798523556	调整杠杠右23653-72151*R	Lever-right	1	右制动器R

3-3.5T驱动桥/DRIVEAXLE

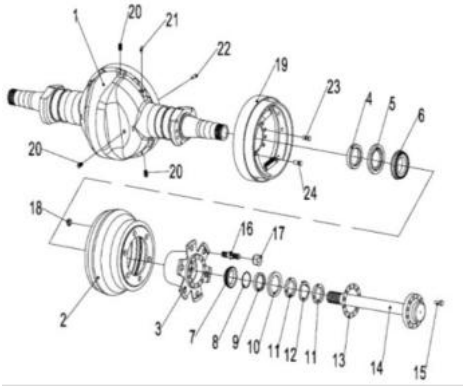

序号/NO	编码/SN	名称	Name	数量/QTY	备注/Remark
A	F030-D-1601000-A0	驱动桥总成H-2300000-06		1	
1	256898523501	驱动桥壳H-2301101-00	Driving axle housing	1	
2	256898523502	制动鼓H-3103103-00	Drum brake	2	
3	256898523503	轮毂H-3103101-00	Hub	2	
4	256898523504	大油封座圈H-3103102-00	Large oil seal ring	2	
5	256898523505	油封100X130X12	Seal ring100x130x12	2	
6	256898523506	圆锥滚子轴承30214	Bearing30214	2	
7	910700600020	圆锥滚子轴承32012	Bearing32012	2	
8	254198523557	O型圈65X3.1	O-ring 65X3.1	2	
9	256898523507	小油封座圈H-3103109-00	Small oil seal ring	2	
10	254198523555	油封75X100X10	Seal ring 75x100x2	2	
11	910300700005	圆螺母M60X2	Round nut M60X2	4	
12	910400900013	止动垫圈60	Lock washer60	2	
13	256898523508	半轴垫H-2303106-00	Half shaft pad	2	
14	256898523509	半轴H-2303101-00	Half shaft	2	
15	256898523510	半轴螺栓H-2303107-00	Half shaft bolt	24	
16	256898523511	轮毂螺栓H-3103106-00	Hub bolt	12	
17	256898523512	轮毂螺母H-3103110-00	Hub nut	12	
18	910300200005	六角螺母M20X1.5	Nut M20X1.5	12	
19	256898523513	左制动器H-3501100-00	Left brake	1	
20	256898523514	右制动器H-3501200-00	Right brake	1	
20	256898523515	堵塞ZG1/2 H-1701104-00	Pug ZG1/2	3	
21	256898523516	透气塞H-2301301-00	Vent plug	1	
22	256898523517	圆柱销	Pin	1	
23	256898523518	制动器定位螺栓H-3501301-00	Brake positioning bolt	4	
24	256898523519	制动器紧固螺栓H-3501302-00	Brake bolt	12	

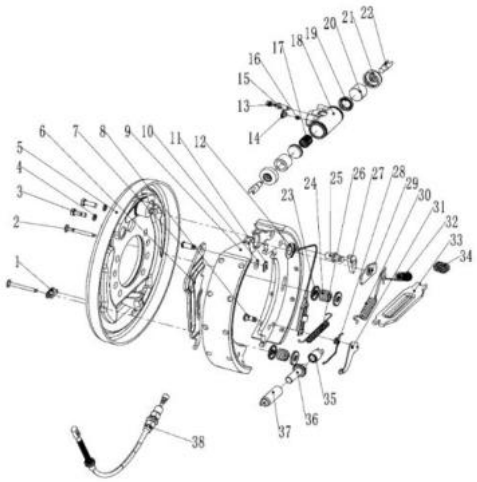

3.0-3.5T 制动器/LEFT BRAKE(30-35Q)

序号/NO	编码/SN	名称	Name	数量/QTY	备注/Remark
1	256898523530	胶堵24433-70040G	Rubber plug 24433-70040G		
2	256898523531	压簧拉杆24433-70010G	Spring tension rod 24433-70010G		
3	256898523532	螺栓M8×1.25×20GB/T5783-2000	Bolt M8 × one point two five × 20GB/T5783-2000		
4	910400500005	弹簧垫圈GB93-6	Spring washer GB93-6		
5	256898523533	制动器底板总成(左）24433-72000G	Brake base plate assembly (left) 24433-7200G		左右对称
5	256898523534	制动器底板总成(右）	Brake backing plate assembly (right)		
6	256898523535	手制动拉杆（左）24433-70140G	Hand brake rod (left) 24433-70140G		左右对称
6	256898523536	手制动拉杆（右）	Hand brake rod (right)		
7	256898523537	销钉2 24433-70150G	Pin 2 24433-70150G		
8	256898523538	销钉1 24433-70110G	Pin 1 24433-70110G		
9	256898523539	制动蹄带摩擦片总（左）24433-71000G	Brake shoe with friction plate assembly (left) 24433-		左右对称
9	256898523540	制动蹄带摩擦片总（右）	Brake shoe with friction plate assembly (right)		
10	256898523541	弹性垫片24433-70160G	Elastic gasket 24433-70160G		
11	256898523542	杆销挡圈24433-70170G	Rod pin retainer 24433-70170G		
12	256898523543	弹簧拉线装置24433-73000G	Spring cable device 24433-73000G		
A	256898523544	制动分泵总成24433-76000G	Brake wheel cylinder assembly		包含13-22
13	▲	分泵放气螺钉帽24433-76100G	Cylinder bleed screw cap 24433-76100G		
14	▲	螺纹防护塞24433-76080G	Thread protection plug 24433-76080G		
15	▲	分泵放气螺钉24433-76090G	Cylinder bleed screw 24433-76090G		
16	▲	制动分泵油塞24433-76070G	Brake wheel cylinder oil plug 24433-76070G		
17	▲	分泵弹簧24433-76040G	Cylinder spring 24433-76040G		
18	▲	制动分泵缸24433-76010G	Brake wheel cylinder 24433-76010G		
19	▲	分泵皮碗24433-76030G	Cylinder cup 24433-76030G		
20	▲	分泵活塞24433-76020G	Cylinder piston 24433-76020G		
21	▲	分泵护罩24433-76050G	Cylinder shield 24433-76050G		
22	▲	分泵活塞顶杆24433-76060G	Cylinder piston rod 24433-76060G		
23	256898523545	压簧座24433-70020G	Pressure spring seat 24433-70020G		
24	256898523546	压簧24433-70030G	Compression spring 24433-70030G		
25	256898523547	销钉4 24433-70801	Pin 4 24433-70801		
26	256898523548	拉簧24433-70050G	Tension spring 24433-70050G		
27	256898523549	导向块24433-70080G	Guide block 24433-70080G		

3.0-3.5T 制动器/LEFT BRAKE(30-35Q)

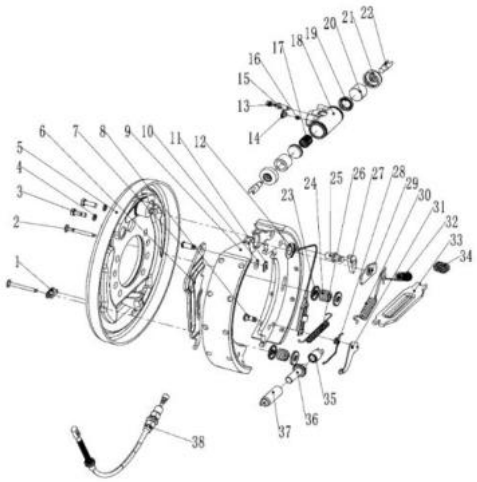

序号/NO	编码/SN	名称	Name	数量/QTY	备注/Remark
28	256898523550	扭簧（左）24433-70090G	Torsion spring (left) 24433-70090G		左右对称
28	256898523551	扭簧（右）	Torsion spring (right)		
29	256898523552	导向板24433-70060G	Guide plate 24433-70060G		
30	256898523553	回位弹簧（Ⅱ）24433-70070G	Return spring (II) 24433-70070G		
31	256898523554	棘爪（左）24433-70100G	Pawl (left) 24433-70100G		左右对称
31	256898523555	棘爪（右）	Pawl (right)		
32	256898523556	回位弹簧(Ⅰ)24433-70010G	Return spring (I) 24433-70010G		
33	256898523557	推杆（左）24433-70120G	Push rod (left) 24433-70120G		左右对称
33	256898523558	推杆（右）	Push rod (right)		
34	256898523559	推簧24433-70130G	Push spring 24433-70130G		
35	256898523560	间隙调整杆24433-74040G	Clearance adjusting rod 24433-74040G		
36	256898523561	间隙调整螺丝（左）24433-74020G	Clearance adjusting screw (left) 24433-74020G		左右对称
36	256898523562	间隙调整螺丝（右）	Clearance adjusting screw (right)		
37	256898523563	间隙调整套24433-74010G	Clearance adjusting sleeve 24433-74010G		
38	256898523564	制动钢索总成24433-77010G	Brake cable assembly 24433-77010G		L=1270
38	256898523565	制动钢索总成（右）	Brake cable assembly (right)		R=1790

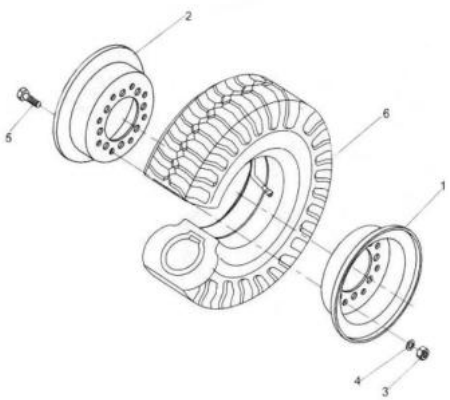

驱动轮(2.5t单轮)/DRIVEWHEEL(2.5tSINGLETIRE)					
序号/NO	编码/SN	名称	Name	数量/QTY	备注/Remark
A	F020-D-3300000-A0	前轮总成-充气胎	Front Wheel Ass'y	2	
A	F020-S-0102000-A0	前轮总成-实心胎	Front wheel assembly - solid tire	2	选配
1	256713021001	外轮辋 (5.00S-12)	Rim,outside (5.00S-12)	2	
2	256713021002	内轮辋 (5.00S-12)	Rim,inside (5.00S-12)	2	
3	910300100010	螺母M16GB/T6170-2000	Nut M16	12	
4	910400500010	垫圈16GB/T93-1987	Washer 16	12	
5	256713021003	轮辋螺栓	Rim bolt	12	
6	F020-D-3301000-A0	轮胎总成（7.00-12-12PR）	Tyre ass'y （7.00-12-12PR）	2	

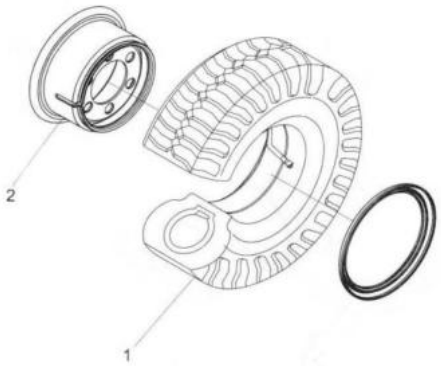

驱动轮(3-3.5t单轮)DRIVEWHEEL(3-3.5tSINGLETIRE)					
序号/NO	编码/SN	名称	Name	数量/QTY	备注/Remark
A	F030-D-3300000-A0	前轮总成-充气胎	Front Wheel Ass'y	2	
A	F030-S-0102000-A0	前轮总成-实心胎	Front wheel assembly - solid tire	2	选配
1	F030-D-3301000-A0	轮胎 (28×9-15-14PR)	Tyre (28×9-15-14PR)	2	
2	F030-D-3302000-A0	轮辋 (7.00T-15)	Rim (7.00T-15)	2	

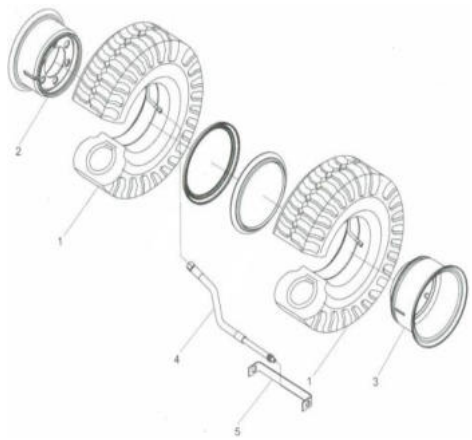

驱动轮（3-3.5t双轮）DRIVEWHEEL(3-3.5tDOUBLETIRE)

序号/NO	编码/SN	名称	Name	数量/QTY	备注/Remark
A	F30S33-00000N-A0	双前轮总成-充气胎	Front Wheel Ass'y	2	
1	F030-D-3301000-A0	轮胎(28×9-15-14PR)	Tyre (28×9-15-14PR)	4	
2	F030-D-3302000-A0	轮辋总成 (7.00T-15)	Rim ass'y(7.00T-15)	2	
3	F30S33-00004-A0	加长气嘴	Extended air cock	2	
4	F30S33-00003-A0	气嘴支架	Air cock bracket	2	

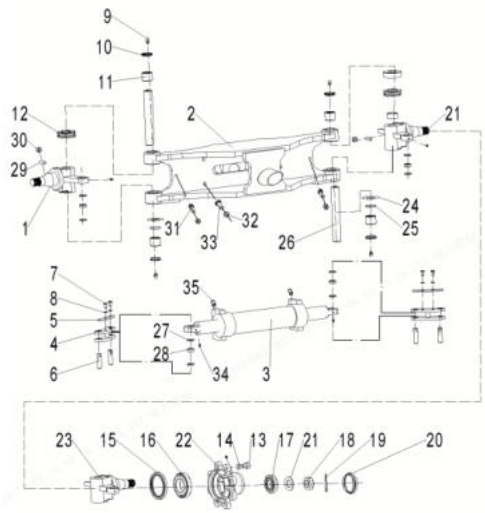

转向桥及安装STEERINGAXLE(2.5t)-康达					
序号/NO	编码/SN	名称	Name	数量/QTY	备注/Remark
A	-	转向桥总成（KD）		1	2.5T
1	293198516001	左转向节总成H-2404100-00		1	
2	293198516002	转向壳体总成G-2401100-01		1	
3	293198516003	转向油缸总成CZ070050UN-103		1	
4	293198516004	连杆H-3412100-00		2	
5	293098516005	挡板H-3412308-00		2	
6	293098516006	连杆销H-3412200-00		4	
7	910100300020	螺栓M8×16		4	
8	910400500006	垫圈8		4	
9	255098526025	压注油杯（90°）		4	
10	255098526056	防尘圈 32*40*6/8 H-3412304-00		2	
11	255098526006	滚针轴承943/32 GB290		4	
12	253698526014	推力轴承198908 H-3412303-00		2	
13	293098516007	轮毂螺母F-3103110-00		16	
14	293098516008	轮毂螺栓H-3103202-00		16	
15	293098516009	橡胶油封85X110X12 GB9877.1		2	
16	256898526018	圆锥滚子轴承30211 GB297		2	
17	255098526012	圆锥滚子轴承30207 GB297		2	
18	253698526038	开槽螺母M30X2 H-3103207-00		2	
19	293198516010	销6.3X55 GB92		2	
20	293198516011	轮毂盖H-3103204-00		2	
21	910400100016	垫圈30GB97.1		2	
22	293198516012	轮毂H-3103201-00		2	
23	293198516013	右转向节H-2404200-00		1	
24	293198516014	转向节调整垫H-2404103-00		2	
25	532698520052	O型圈 d31.8X4.8 GB3452.1		2	
26	293198516015	主销H-2404102-00		2	
27	293198516016	关节轴承衬套H-3412301-00		8	
28	293198516017	向心关节轴承G16ES H-3412309-00		2	
29	293198516018	紧定螺钉M12X35 GB78		2	
30	910300100008	螺母M12 GB6170		4	

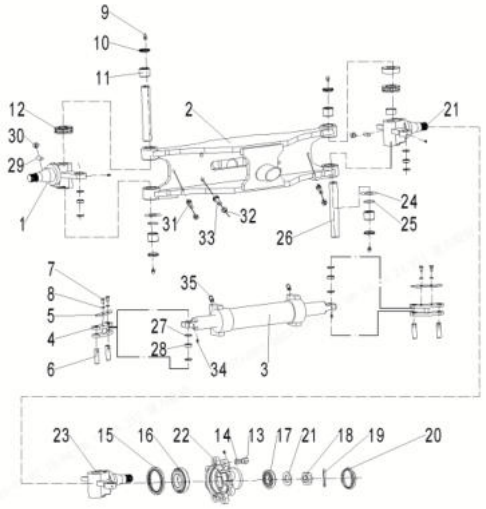

转向桥及安装STEERINGAXLE(2.5t)-康达					
序号/NO	编码/SN	名称	Name	数量/QTY	备注/Remark
31	910100300052	六角螺栓M12X40		2	
32	910400500009	垫圈14 GB93		4	
33	910100300092	六角螺栓M14×40		4	
34	503298520008	直通式压注油杯JB/T7940.1		4	
35	255098526008	圆柱销10X20		2	

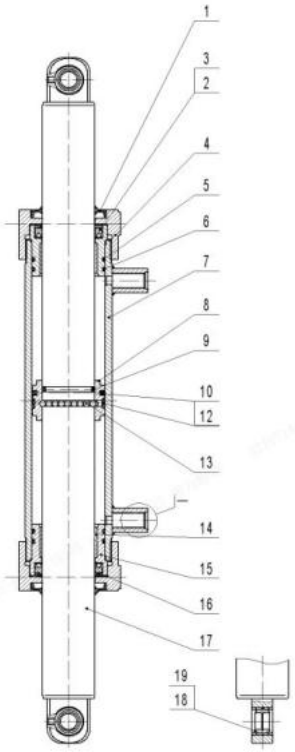

转向油缸/STEERINGCYLINDER(2.5t)-康达

序号/NO	编码/SN	名称	Name	数量/QTY	备注/Remark
A	293198516019	转向油缸CZ070050UN-103			
1	▲	防尘圈50×72×8/11 DKB 50		2	
2	▲	轴用U型圈50×65×9 IDI 50		2	
3	▲	挡片50×65×3 MD-065050030		2	
4	▲	缸盖 CZ070050KDα-01		2	
5	▲	O型密封圈D70×3.1 MO-070031		2	
6	▲	O型密封圈d64.4×3.1 CO 00208		2	
7	▲	缸筒体 CZ070050UN-103.1		1	
8	▲	活塞 CZ070050KDα.2.2		1	
9	▲	O型密封圈d43.7×3.5 CO 00042		1	
10	▲	格莱圈70×65×4.5 MZ-070065045		1	
11	▲	O型密封圈d58×3.55 CO 7283A		1	
12	▲	支撑环70×2.5×9.7 （MZ-070025097）		1	
13	▲	钢球Φ6 （B110-006）		25	
14	▲	钢背轴承5030(t=2.5)MG-0500250030-1		2	
15	▲	轴套CZ070050KDα-02		2	
16	▲	调整垫片CZ070050KDα-03		1组	
17	▲	活塞杆CZ070050KDα.2.1		1	
18	▲	关节轴承GE16ES（B100-016）		2	
19	▲	轴承衬套CZ070050KDα.2.1.1		4	
B	293198510007	转向油缸密封包(FD25N)			

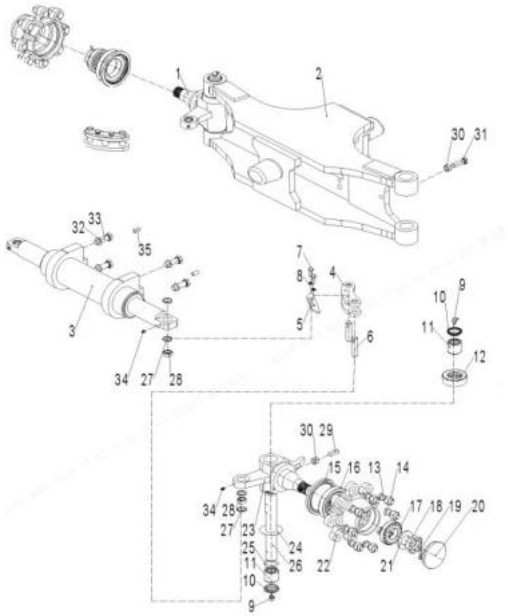

转向桥及安装/STEERINGAXLE(3-3.5T)-康达					
序号/NO	编码/SN	名称	Name	数量/QTY	备注/Remark
A	F030-D-4301000-A0	转向桥总成		1	3-3.5T
1	293198516002	左转向节总成H-2404100-00		1	
2	293098516010	转向桥体总成H-2401100-02		1	
3	293098516011	转向油缸CZ070050KDH		1	
4	293198516004	连杆H-3412100-00		2	
5	293098516012	卡板H-3412308-00		2	
6	293098516006	连杆销H-3412200-00		4	
7	910100300020	六角螺栓M8X16		4	
8	910400500006	弹簧垫圈8		4	
9	255098526025	压注油杯（90°）JB/T7940.2-1992		4	
10	293098516013	防尘圈H-3412304-00		2	
11	255098526006	滚针轴承943/32 GB290-84		4	
12	253698526014	推力轴承198908（H-3412303-00）		2	
13	293098516007	轮毂螺母F-3103110-00		16	
14	293098516008	轮毂螺栓H-3103202-00		16	
15	293098516009	油封85X110X12 GB9877.1		2	
16	256898526018	圆锥滚子轴承30211GB297		2	
17	255098526012	圆锥滚子轴承30207GB297		2	
18	272516021025	开槽螺母M30X2 H-3103207-00		2	
19	293098516014	销⌀6.3×55GB91		2	
20	293198516011	轮毂盖H-3103204-00		2	
21	293098516015	垫圈30H-3103210-00		2	
22	293198516012	轮毂H-3103201-00		2	
23	293198516013	右转向节H-2404200-00		1	
24	293198516014	转向节调整垫H-2404103-00		2	
25	532698520052	O型圈 d31.8X4.8GB3452.1-86		2	
26	293198516015	主销H-2404102-00		2	
27	293198516016	关节轴承衬套H-3412301-00		8	
28	293198516017	向心关节轴承G16ES		4	
29	293198516018	紧定螺钉M12X35GB78		2	
30	293098516016	关节轴承衬套H-3412309-00		2	

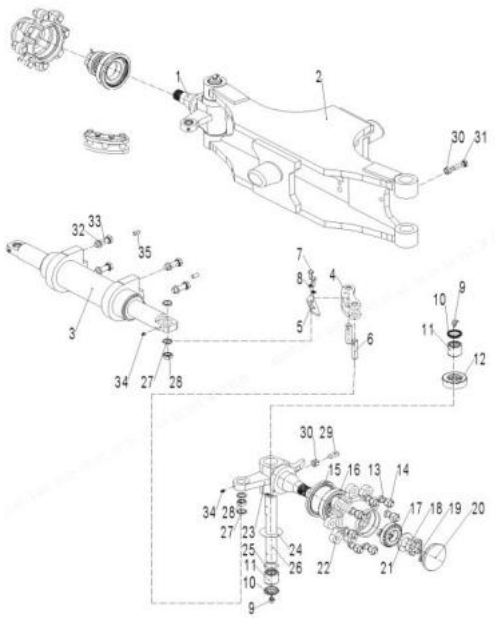

转向桥及安装/STEERINGAXLE(3-3.5T)-康达					
序号/NO	编码/SN	名称	Name	数量/QTY	备注/Remark
31	293098516017	向心关节轴承G16ESH-3412309-00		2	
32	910300100008	螺母M12GB6170		4	
33	910100300052	六角螺栓M12X40GB5783		4	
34	503298520008	直通式压注油杯JB/T7940.1		4	
35	255098526008	圆柱销10X20GB119		2	

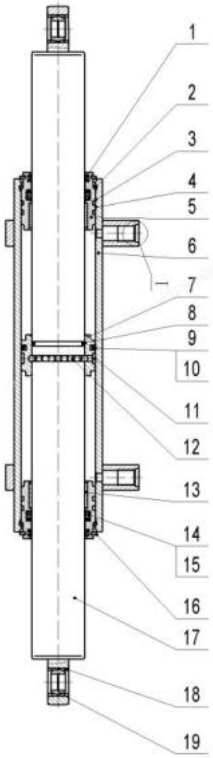

转向油缸/STEERINGCYLINDER((3-3.5T)-康达					
序号/NO	编码/SN	名称	Name	数量/QTY	备注/Remark
A	293098516011	H2000转向油缸总成CZ070050KDH			
1	▲	防尘圈50×58×5/6.5WDJ200500-Z201		2	
2	▲	钢丝挡圈D74×3.2B180-074032		2	
3	▲	O型圈D70×3.1MO-070031		2	
4	▲	O型圈d64.4×3.1CO 00208		2	
5	▲	轴套CZ070050KDH-01		2	
6	▲	缸筒体CZ070050KDH.1		1	
7	▲	活塞CZ070050KDα.2.2		1	
8	▲	O型圈d43.7×3.5CO 00042		1	
9	▲	格莱圈70×65×4.5MZ-070065045		1	
10	▲	O型圈d58×3.55CO 7283A		1	
11	▲	支撑环70×2.5×10MZ-070025010		1	
12	▲	钢球Φ6B110-006		25	
13	▲	钢背轴承5025(t=2.5)MG-050025025-1		2	
14	▲	轴用U型圈50×60×6ISI 50		2	
15	▲	挡片50×60×3MD-060050030		2	
16	▲	轴用弹性挡圈65B090-065		2	
17	▲	活塞杆CZ070050KDα.2.1		1	
18	▲	轴承衬套CZ070050KDα.2.1.1		4	
19	▲	关节轴承GE16ESB100-016		2	
B	293098510007	转向油缸密封包（FD30-35N）			

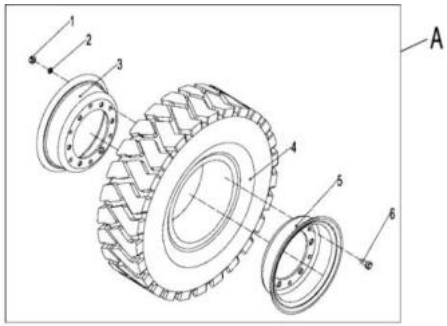

转向轮总成/STEERINGWHEEL(2.5-3.5t)

序号/NO	编码/SN	名称	Name	数量/QTY	备注/Remark
A	F020-D-4400000-A0	后轮总成-充气胎	Rear Wheel Ass'y	2	2.5t
A	F020-S-0202000-A0	后轮总成-实心胎	Rear wheel assembly - solid tire	2	2.5t选配
A	F030-D-4400000-A0	后轮总成-充气胎	Rear Wheel Ass'y	2	3-3.5t
A	F030-S-0102000-A0	后轮总成-实心胎	Rear wheel assembly - solid tire	2	3-3.5t选配
1	910300100008	螺母M12GB/T6170-2000	Nut M12	16	
2	910400500008	垫圈12GB/T93-1987	Washer 12	16	
3	256715521001	内轮辋(4.00E-9)	Rim,inside (4.00E-9)	2	2.5t
3	256815520001	内轮辋 (5.00F-10)	Rim,inside (5.00F-10)	2	3-3.5t
4	F020-D-4401000-A0	轮胎 (6.00-9-10PR)	Tyre (6.00-9-10PR)	2	2.5t
4	F030-D-4401000-A0	轮胎 (6.50-10-10PR)	Tyre (6.50-10-10PR)	2	3-3.5t
5	256715521002	外轮辋 (4.00E-9)	Rim,outside (4.00E-9)	2	2.5t
5	256815520002	外轮辋(5.00F-10)	Rim,outside (5.00F-10)	2	3-3.5t
6	F030-D-4400001-A0	轮辋螺栓	Rim Bolt	16	

转向装置及安装/STEERINGSYSTEM(2.5-3.5t)

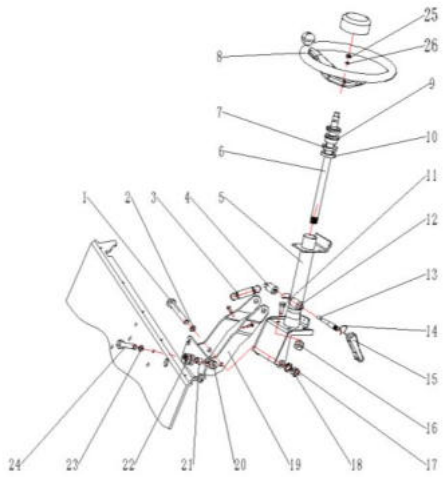

序号/NO	编码/SN	名称	Name	数量/QTY	备注/Remark
1	RF025-7-4200003-A0	螺栓	Bolt	2	
2	RF025-7-4200002-A0	衬套	Bushing	2	
3	F030-D-4200003-A0	拉簧	Spring	2	
4	RF025-7-4200001-A0	锁紧块	Block	1	
5	F030-D-4201100-A0	转向管柱总成	Column ass'y	1	
6	F030-D-4201001-A0	转向轴	Steering shaft	1	
7	910401300011	轴用弹性挡圈 20GB/T894.1-Φ20	Axial circlip 20	1	
8	RF035-4-4204000-A0	方向盘总成 φ300	Steering wheel ass'y φ300	1	
9	F030-D-4201003-A0	尼龙套	Nylon Bushing	1	
10	910700200045	轴承 61904GB/T276-1994-61904	Bearing 61904	1	
11	910100300013	螺栓 M6×30GB/T5783-M6*30-8.8J	Bolt M6×30	4	
12	RF025-7-4200004-A0	垫块	Cushion	1	
13	RF025-7-4200005-A0	轴	Shaft	1	
14	RF025-7-4200006-A0	卡扣	Clip	1	
15	RF025-7-4202000-A0	锁紧手柄	Lock handle	1	
16	910300100005	螺母 M6GB/T6170-M6-8J	Nut M6	4	
17	910300100008	螺母 M12GB/T6170-M12	Nut M12	2	
18	910400500008	垫圈 12GB/T93-12	Washer 12	10	
19	F030-D-4202000-A0	方向管柱支架	Bracket steering column	1	
20	910300100008	螺母 M12GB/T6170-M12	Nut M12	4	
21	F030-D-4200002-A0	隔套	Sheeve	4	
22	F030-D-4200001-A0	减震垫A	Shock pad A	4	
23	910400100008	垫圈 12GB/T97.1-12	Washer 12	2	
24	910100300053	螺栓 M12×45GB/T5783-M12*45-8.8J	Bolt M12×45	4	
25	910300400006	螺母 M16×1.5GB/T6173-M16*1.5-8J	Nut M16x1.5	1	
26	910400500010	垫圈 16GB/T93-16	Washer 16	1	

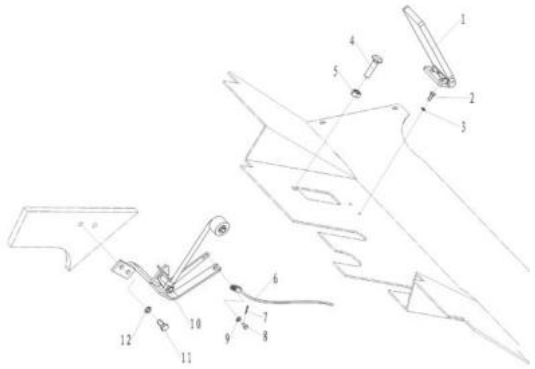

油门操纵/ACCELERATORPEDAL(2.5-3.5t)

序号/NO	编码/SN	名称	Name	数量/QTY	备注/Remark
A	-	油门操纵装置	Accelerator pedal mount	1	
1	RF035-4-5202000-A0	油门踏板	Accelerator pedal	1	
2	910100300010	螺栓 M6×16GB/T5783-2000	Bolt M6×16	2	
3	910400500005	垫圈 6GB/T93-1987	Washer 6	2	
4	RF035-4-5200001-A0	螺栓	Bolt	1	
5	910300200003	螺母 M12×1.25GB/T6171-2000	Nut M12×1.25	1	
6	RF035-4-5203000-A0	油门拉线	Accelerator cable	1	4TNE98
6	F030-DL-5201000-A0	油门拉线	Accelerator cable	1	S4S K25
7	910600600013	销 2×16GB/T91-2000	Pin 2×16	2	
8	910600700011	销轴 6×12GB/T882-2000	Pin shaft 6×12	2	
9	910400100005	垫圈 6GB/T97.1-2000	Washer 6	2	
10	F030-D-5201000-A0	油门支架总成	Accelerator bracket ass'y	1	
11	910100300035	螺栓 M10×20GB/T5783-2000	Bolt M10×20	2	
12	910400500007	垫圈 10GB/T93-1987	Washer 10	2	

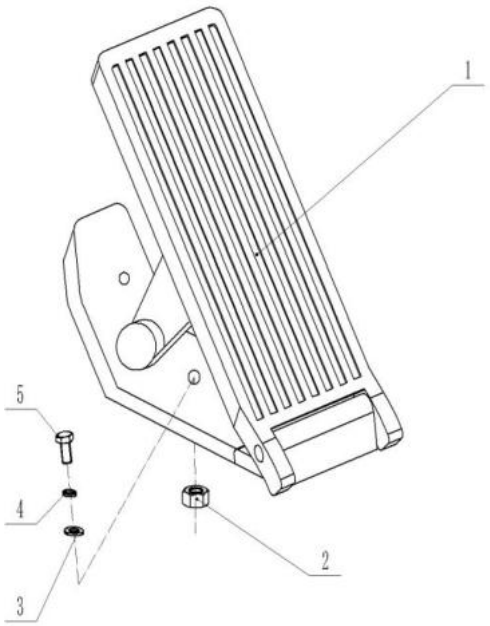

电子油门操纵/ELECTRONIC ACCELERATOR PEDAL(2.5-3.5t)					
序号/NO	编码/SN	名称	Name	数量/QTY	备注/Remark
A	-	油门操纵装置	Accelerator pedal mount	1	
1	F030-GLH-5200000-A0	油门踏板	accelerator pedal	1	双燃料
1	F030-DV-2501000-A0	加速器	accelerate	1	LS
1	F030-DC-2501000-A0	加速器	accelerate	1	发动机自带
2	910300100006	螺母M8GB/T6170-2000	Nut M8	2	
3	910400100006	垫圈 8GB/T97.1-2002	Washer 8	2	
4	910400500006	垫圈 8GB/T93-1987	Washer 8	2	
5	910100300025	螺栓 M8×35GB/T5783-2000	Bolt M8*35	2	

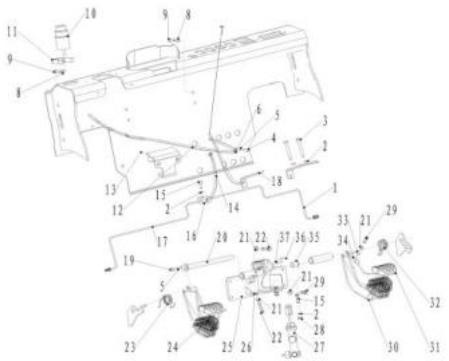

制动微动操纵(液力式)/BRAKE&INCHINGCONTROL(TOR-CONTYPE)(2.5-3.5t)					
序号/NO	编码/SN	名称	Name	数量/QTY	备注/Remark
A	-	制动微动操作装置	Brake & inching pedal	1	
01	F030-D-5801000-A0	右制动硬管	Right brake hard tube	1	
02	910400500007	垫圈10GB/T93-1987	Washer 10	7	
03	910100300032	螺栓M8×70GB/T5783-2000	Bolt M8×70	2	
04	910100300009	螺栓M6×12GB/T5783-2000	Bolt M6×12	2	
05	910400500005	垫圈6GB/T93-1987	Washer 6	2	
06	GMS-DJRX	管夹9.5	Pipe clamp 9.5	2	
07	RF035-4-5804000-A0	微动拉线	Inching cable	1	
08	910400500006	垫圈8GB/T93-1987	Washer 8	5	
09	910100300022	螺栓M8×20GB/T5783-2000	Bolt M8×20	5	
10	RF035-4-5802000-A0	储油罐	Reservoir	1	
11	RF035-4-5801000-A0	制动液罐座	Reservoir seat	1	
12	RF035-4-5800001-A0	耐液胶管φ9×4-(515)	Hose φ9×4-(515)	1	
13	911000600012	喉箍d20JB/T8870-1999	Hoop d20	2	
14	RF035-4-5806000-A0	制动软管总成	Brake hose ass'y	1	
15	910100300037	螺栓M10×30GB/T5783-2000	Bolt M10×30	3	
16	RF035-4-5800002-A0	三通	Tee connector	1	
17	F030-D-5801000-A0	左制动硬管	Left brake hard tube	1	
18	RF035-4-5800003-A0	支架	Bracket	1	
19	910100300010	螺栓M6×16GB/T5783-2000	Bolt M6×16	1	
20	RF035-4-5803400-A0	销轴	Pin shaft	1	
21	910300100006	螺母M8GB/T6170-2000	Nut M8	4	
22	910100300026	螺栓M8×40GB/T5783-2000	Bolt M8×40	2	
23	RF035-4-5803003-A0	微动扭簧	Torsional spring	1	
24	RF035-4-5803200-A0	微动踏板	Inching pedal	1	
25	RF035-4-5803100-A0	支架	Bracket	1	
26	RF035-4-5803000-A0	脚制动总成	Foot brake assembly	1	
27	RF035-4-5807000-A0	制动总泵	Master cylinder	1	
28	910300100007	螺母M10GB/T6170-2000	Nut M10	3	
29	910100300023	螺栓M8×25GB/T5783-2000	Bolt M8×25	2	
30	RF035-4-5803300-A0	制动踏板	Brake pedal	1	

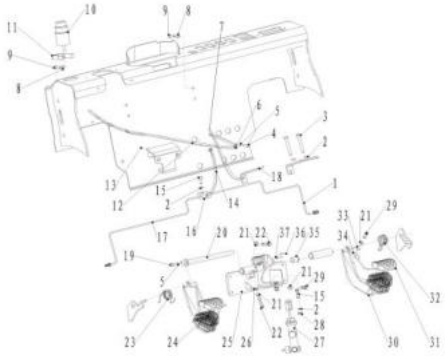

制动微动操纵(液力式)BRAKE&INCHINGCONTROL(TOR-CONTYPE)(2.5-3.5t)					
序号/NO	编码/SN	名称	Name	数量/QTY	备注/Remark
31	RF035-4-5803001-A0	踏板垫	Pedal cover	2	
32	RF035-4-5803002-A0	制动扭簧	Torsional spring	1	
33	293098591032	开口销2x25GB/T91-2000	Cotter pin 2x25	2	
34	RF035-4-5803004-A0	橡皮顶轴	Adjusting shaft	2	
35	FB1825	自润滑翻边轴承	Self lubricating bearing flange	4	
36	910600600026	开口销3x20GB/T91-2000	Cotter pin 3x20	1	
37	910600700025	销轴 8x26GB/T882-1986	Pin shaft 8×26	1	

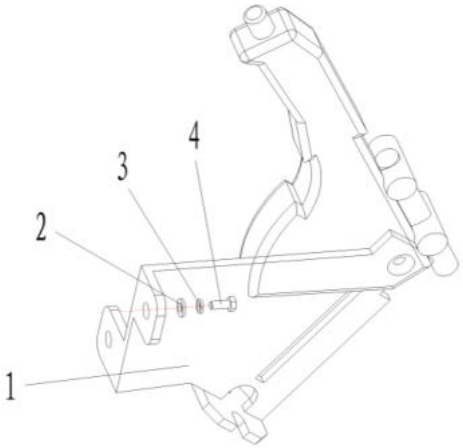

手制动操纵/PARKINGBRACKCONTROL(2.5-3.5t)

序号/NO	编码/SN	名称	Name	数量/QTY	备注/Remark
1	293212011001	手制动总成	Parking brake	1	
2	910400100007	垫圈10GB/T97.1-2000	Washer 10	2	
3	910400500007	垫圈10GB/T93-1987	Washer 10	2	
4	910100300036	螺栓M10×25GB/T5783-2000	Bolt M10×25	2	

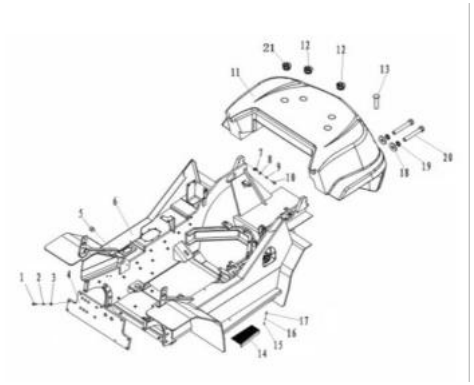

车架与平衡重/FRAME&COUNTERBALABCEWEIGHT(2.5-3.5t)					
序号/NO	编码/SN	名称	Name	数量/QTY	备注/Remark
1	910100300050	螺栓M12×30GB/T5783-2000	Bolt M12×30	4	
2	910400500008	垫圈12GB/T93-1987	Washer 12	4	
3	910400100008	垫圈12GB/T97.1-2000	Washer 12	4	
4	F030-D-6101000-A0	前横板	Front plate	1	
5	SF-13030	边界润滑轴承	Bush bearing	2	
6	F020-D-6100000-A0	车架	Frame	1	洋马98，S4S，新柴
6	F020-DV-6100000-A0	车架	Frame	1	LS L4CRTV4
6	F020-GLHH-6100000-A0	车架	Frame	1	现代L4KB
6	F020-DC-6100000-A0	车架	Frame	1	新柴欧5
6	F030-D-6100000-A0	车架	Frame	1	洋马98，S4S，新柴
6	F030-DV-6100000-A0	车架	Frame	1	LS L4CRTV4
6	F030-GLHH-6100000-A0	车架	Frame	1	现代L4KB
6	F030-DC-6100000-A0	车架	Frame	1	新柴欧5
7	RF035-4-6300004-A0	调整垫	Adjusting pad	0-4	
8	910400100006	垫圈8GB/T97.1-2000	Washer 8	2	
9	910400500006	垫圈8GB/T93-1987	Washer 8	2	
10	910100300022	螺栓M8×20GB/T5783-2000	Bolt M8×20	2	
11	F025-D-6300000-A0	平衡重	Counter balance	1	2.5T
11	F030-D-6300000-A0	平衡重	Counter balance	1	3T
11	F035-D-6300000-A0	平衡重	Counter balance	1	3.5T
12	RF035-4-6300003-A0	可吊装孔塞子	Cap	2	
13	RF035-4-6300006-A0	牵引栓	Traction pin	1	
14	F030-D-6400005-A0	脚踏板	Foot plate	1	
15	910400100006	垫圈8GB/T97.1-2000	Washer 8	4	
16	910400500006	垫圈8GB/T93-1987	Washer 8	4	
17	910200500062	螺栓M8×16GB/T818-2000	Bolt M8×16	4	
18	RF035-4-6300005-A0	垫片	Washer	2	
19	910400500014	垫圈30GB/T93-1987	Washer 30	2	
20	910100100110	螺栓M30×150GB/T5782-2000	Bolt M30×150	2	2.5T
20	910100100152	螺栓M30×200GB/T5782-2000	Bolt M30×200	2	3-3.5T
21	RF035-4-6300002-A0	不可吊装孔塞子	Cap	2	

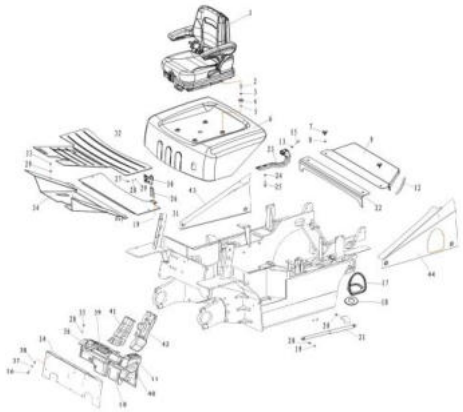

机罩、底板及座椅安装/HOOD,FLOOR&SEATMOUNT(2.5-3.5t)					
序号/NO	编码/SN	名称	Name	数量/QTY	备注/Remark
1	RF035-4-6801000-A0	座椅	Seat	1	
2	910100100023	螺栓 M8×45GB/T5782-2000	Bolt M8×45	4	
3	910400100006	垫圈 8GB/T97.1-2000	Washer 8	11	
4	RF035-4-6800001-A0	橡胶垫	Rubber danper	4	
5	910300500004	螺母 M8GB/T889.1-2000	Nut M8	4	
6	F030-D-6407000-A0	机罩	Hood	1	
7	911000300005	星形把手JB/T7274.4-1994	Radiator cover bolt	2	
8	RF035-4-6400011-A0	垫圈	Washer	2	
9	F030-D-6400006-A0	水箱盖板	Radiator cover	1	
9	F030-GLH-6400001-A0	水箱盖板	Radiator cover	1	现代L4KB双燃料认证
10	F030-D-6403001-A0	下罩	Cover	1	
11	F030-D-6403002-A0	手制动罩	Cover	1	
12	RF035-4-6400013-A0	密封条	Seal stip	1	
13	910400500006	垫圈 8GB/T93-1987	Washer 8	12	
14	F030-D-6401000-A0	仪表架	Display pracket	1	
15	910100300020	螺栓 M8×16GB/T5783-2000	Bolt M8×16	12	
16	910100300048	螺栓 M12×20GB/T5783-2000	Bolt M12×20	4	
17	RF035-4-6400003-A0	加油口罩	Oiling cover	1	
18	RF035-4-6400004-A0	加油口封盖	Oiling cap	1	
19	910300100006	螺母 M8GB/T6170-2000	Nut M8	6	
20	910400500006	垫圈 8GB/T93-1987	Washer 8	8	
21	RF035-4-6403000-A0	气弹簧	Gas spring	1	
22	F030-D-6400002-A0	盖板	Protection cover	1	
23	RF035-4-6405000-A0	铰链总成	Hinge ass'y	2	
24	910400500007	垫圈 10GB/T93-1987	Washer 10	4	
25	910100300035	螺栓 M10×20GB/T5783-2000	Bolt M10×20	4	
26	RF035-4-6400005-A0	机罩锁扣钩	Hood hook	1	
27	293098591033	螺钉 M6×16GB/T823-2000	Screw M6×16	24	
28	910400500005	垫圈 6GB/T93-1987	Washer 6	24	
29	910400100005	垫圈 6GB/T97.1-2000	Washer 6	26	
30	RF035-4-6402000-A0	机罩锁	Hood lock	1	

机罩、底板及座椅安装/HOOD,FLOOR&SEATMOUNT(2.5-3.5t)						
	序号/NO	编码/SN	名称	Name	数量/QTY	备注/Remark
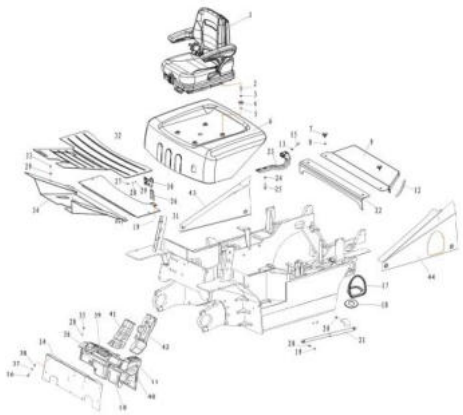	31	F030-D-6406000-A0	后地板	Rear floor board	1	
	32	F030-D-6400004-A0	橡胶底板	Robber mat	1	
	33	910200500062	螺钉 M8×16GB/T818-2000	Screw M8×16	8	
	34	F030-D-6405000-A0	前地板	Front floor board	1	
	34	F030-B-6401000-A0	前地板	Front floor board	1	LS，现代双燃料，新柴欧5
	35	910200500051	螺钉 M6×12GB/T818-2000	Screw M6×12	20	
	36	F030-D-6403003-A0	右罩	Cover	1	
	37	910400100008	垫圈 12GB/T97.1-2002	Washer 12	4	
	38	910400500008	垫圈 12GB/T93-1987	Washer 12	4	
	39	F030-D-6403004-A0	上罩	Cover	1	
	40	F030-D-6403005-A0	制动油杯罩	Cover	1	
	41	F030-D-6404001-A0	转向管柱上罩	Cover	1	
	42	F030-D-6404002-A0	转向管柱下罩	Cover	1	
	43	F030-D-6402000-A0	右侧板	Right lateral plate	1	
	43	F030-DV-6401000-A0	右侧板	Right lateral plate	1	3T LS
	43	F020-D-6401000-A0	右侧板	Right lateral plate	1	
	43	F020-DV-6401000-A0	右侧板	Right lateral plate	1	2.5T LS
	44	F030-D-6408000-A0	左侧板	Left lateral plate	1	3-3.5T
	44	F020-D-6402000-A0	左侧板	Left lateral plate	1	2.5T

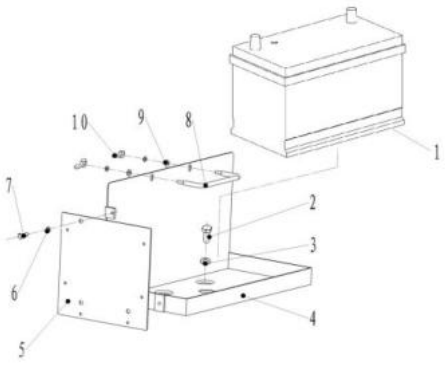

蓄电池及安装/STARTBATTERYMOUNT(2.5-3.5t)

序号/NO	编码/SN	名称	Name	数量/QTY	备注/Remark
1	RF035-4-1402000-A0	蓄电池	Start battary	1	YM98 S4S
1	F030-GN-1402000-A0	蓄电池	Start battary	1	
2	910100300020	螺栓M8×16GB/T5783-2000	Bolt M8×16	4	
3	910400200003	垫圈8GB/T96.1-2002	Washer 8	4	
4	RF035-4-1401000-A0	FD电瓶底板	Start battary seat(diesel)	1	
4	F030-GN-1401000-A0	FD电瓶底板	Start battary seat(diesel)	1	
5	RF035-4-1400001-A0	电器总成盒底板	Electrical box seat	1	
6	910400500005	垫圈 6GB/T93-1987	Washer 6	5	
7	910100300009	螺栓M6×12GB/T5783-2000	Bolt M6×12	3	
8	RF035-4-1400002-A0	电瓶固定杆	Battary fixed lever	1	
9	910400100005	垫圈6GB/T97.1-2000	Washer 6	2	
10	910301500003	螺母M6GB/T62-1988	Nut M6	2	

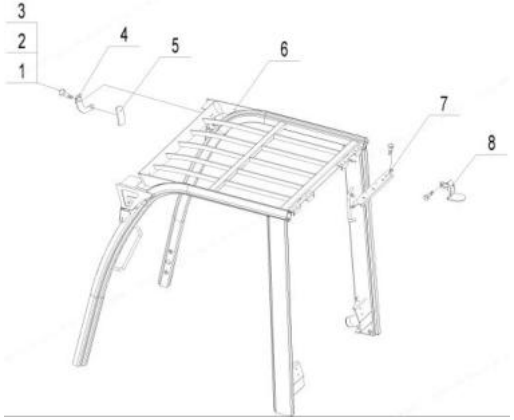

护顶架/OVERHEADGUARD(2.5-3.5t)

序号/NO	编码/SN	名称	Name	数量/QTY	备注/Remark
1	910400500006	垫圈 8GB/T93-1987	Washer 8	6	
2	910400500006	垫圈 8GB/T93-1987	Washer 8	6	
3	910100300023	螺栓 M8×25GB/T5783-2000	Bolt M8×16	6	
4	255049520003	后视镜支架	Rearview mirror bracket	1	
5	940800100001	内后视镜EQ-140	Rearview mirror ass'y	1	
6	293022011001	护顶架总成	Overhead guard ass'y	1	
6	F030-S-0401000-A0	半封闭驾驶室		1	半封闭驾驶室、全封闭驾驶室
7	252122021029	尾灯架	tail light bracket	1	
8	251133521016	警示灯架	Warning light stand	1	
-	F030-D-5102000-A0	前灯架		2	驾驶室
-	F030-S-0501000-A0	驾驶室左门		1	全封闭驾驶室
-	F030-S-0502000-A0	驾驶室右门		1	全封闭驾驶室

工作油箱装置及安装/HYDRAULICOILTANKMOUNT(2.5-3.5t)

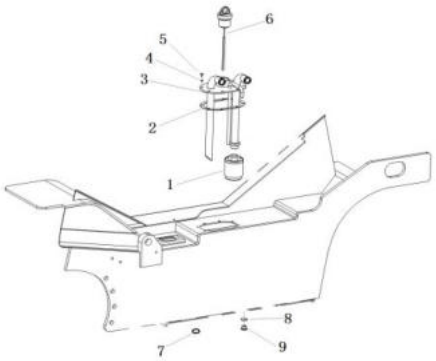

序号/NO	编码/SN	名称	Name	数量/QTY	备注/Remark
1	RF035-4-7503000-A0	液压油滤清器Y0809B	Hydraulic filter Y0809B	1	
2	RF035-4-2200002-A0	密封垫	Cover gasket	1	
3	RF035-4-7501000-B0	液压油箱盖板总成	Cover plate ass'y	1	
4	910800900010	垫圈8JB982-77	Washer 8	8	
5	910100300022	螺栓M8×20GB/T5783-2000	Bolt M8×20	8	
6	RF035-4-7502000-A0	加油盖	Oiling cap	1	
7	RF035-4-2200001-A0	吸铁石	Magnet	1	
8	910800900001	垫圈20JB982-77	Washer 20	1	
9	RF035-4-2200004-A0	放油塞	Drain plug	1	

多路换向阀操纵(二联)/MULTI-WAYVALVEMOUNT(TWO-THROW)(2.5-3.5t)						
	序号/NO	编码/SN	名称	Name	数量/QTY	备注/Remark
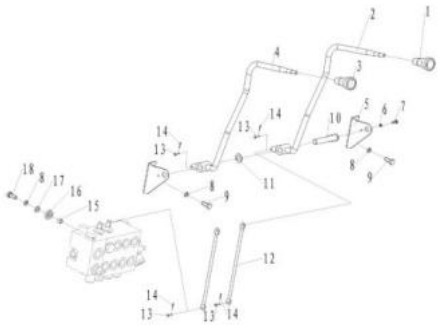	1	RF035-4-7401000-A0	起升手柄	Lift konb	1	
	2	RF035-4-7404000-A0	起升操纵杆	Lift lever	1	
	3	RF035-4-7402000-A0	倾斜手柄	Tilt knob	1	
	4	RF035-4-7405000-A0	倾斜操纵杆	Tilt lever	1	
	5	F030-D-7400001-A0	支座	Bracket	2	
	6	910400500005	垫圈 6GB/T93-1987	Washer 6	1	
	7	910100300009	螺栓 M6×12GB/T5783-2000	Bolt M6×12	1	
	8	910400500007	垫圈 10GB/T93-1987	Washer 10	7	
	9	910100300035	螺栓 M10×20GB/T5783-2000	Bolt M10×20	4	
	10	RF035-4-7408000-A0	二联销轴	Two way valve pin shaft	1	
	11	RF035-4-7400008-A0	多路阀尼龙衬套	Multi-way valve	按需	
	12	RF035-4-7400004-A0	连接杆	Connecting rod	2	
	13	RF035-4-7400003-A0	销轴	Pin shaft	4	
	14	910600600011	销 2×12GB/T91-2000	Pin 2×12	4	
	15	RF035-4-7400002-A0	套管	Collar	3	
	16	RF035-4-7400001-A0	橡胶垫	Rubber danper	6	
	17	910400200004	垫圈 10GB/T96.1-2002	Washer 10	3	
	18	910400400003	螺栓 M10×1.25×25GB/T5786-2000	Bolt M10×1.25×25	3	

多路换向阀操纵(三联)/MULTI-WAYVALVEMOUNT(THREE-THROW)(2.5-3.5t)

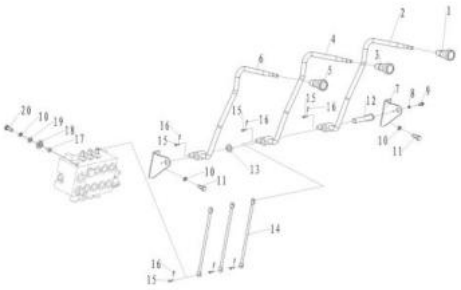

序号/NO	编码/SN	名称	Name	数量/QTY	备注/Remark
1	RF035-4-7403000-A0	属具手柄	4th way valve knob	1	
2	RF035-4-7406000-A0	第三联操纵杆	3rd way valve lever	1	
3	RF035-4-7401000-A0	起升手柄	Lift konb	1	
4	RF035-4-7404000-A0	起升操纵杆	Lift lever	1	
5	RF035-4-7402000-A0	倾斜手柄	Tilt knob	1	
6	RF035-4-7405000-A0	倾斜操纵杆	Tilt lever	1	
7	F030-D-7400001-A0	支座	Bracket	2	
8	910400500005	垫圈 6GB/T93-1987	Washer 6	1	
9	910100300009	螺栓 M6×12GB/T5783-2000	Bolt M6×12	1	
10	910400500007	垫圈 10GB/T93-1987	Washer 10	7	
11	910100300035	螺栓 M10×20GB/T5783-2000	Bolt M10×20	4	
12	RF035-4-7409000-A0	三联销轴	Three way valve pin shaft	1	
13	RF035-4-7400008-A0	多路阀尼龙衬套	Multi-way valve	按需	
14	RF035-4-7400004-A0	连接杆	Connecting rod	3	
15	RF035-4-7400003-A0	销轴	Pin shaft	6	
16	910600600011	销 2×12GB/T91-2000	Pin 2×12	6	
17	RF035-4-7400002-A0	套管	Collar	3	
18	RF035-4-7400001-A0	橡胶垫	Rubber danper	6	
19	910400200004	垫圈 10GB/T96.1-2002	Washer 10	3	
20	910400400003	螺栓 M10×1.25×25GB/T5786-2000	Bolt M10×1.25×25	3	

多路换向阀操纵(四联)/MULTI-WAYVALVEMOUNTE(FOUR-THROW)(2.5-3.5t)

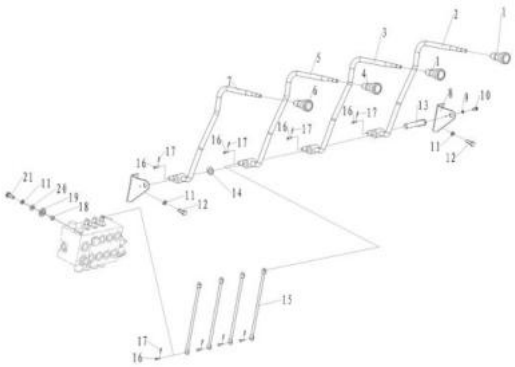

序号/NO	编码/SN	名称	Name	数量/QTY	备注/Remark
1	RF035-4-7403000-A0	属具手柄	4th way valve knob	2	
2	RF035-4-7407000-A0	第四联操纵杆	4th way valve lever	1	
3	RF035-4-7406000-A0	第三联操纵杆	3rd way valve lever	1	
4	RF035-4-7401000-A0	起升手柄	Lift konb	1	
5	RF035-4-7404000-A0	起升操纵杆	Lift lever	1	
6	RF035-4-7402000-A0	倾斜手柄	Tilt knob	1	
7	RF035-4-7405000-A0	倾斜操纵杆	Tilt lever	1	
8	F030-D-7400001-A0	支座	Bracket	2	
9	910400500005	垫圈 6GB/T93-1987	Washer 6	1	
10	910100300009	螺栓 M6×12GB/T5783-2000	Bolt M6×12	1	
11	910400500007	垫圈 10GB/T93-1987	Washer 10	7	
12	910100300035	螺栓 M10×20GB/T5783-2000	Bolt M10×20	4	
13	RF035-4-7410000-A0	四联销轴	four-way value pin shaft	1	
14	RF035-4-7400008-A0	多路阀尼龙衬套	Multi-way valve	按需	
15	RF035-4-7400004-A0	连接杆	Connecting rod	4	
16	RF035-4-7400003-A0	销轴	Pin shaft	8	
17	910600600011	销 2×12GB/T91-2000	Pin 2×12	8	
18	RF035-4-7400002-A0	套管	Collar	3	
19	RF035-4-7400001-A0	橡胶垫	Rubber danper	6	
20	910400200004	垫圈 10GB/T96.1-2002	Washer 10	3	
21	910400400003	螺栓 M10×1.25×25GB/T5786-2000	Bolt M10×1.25×25	3	

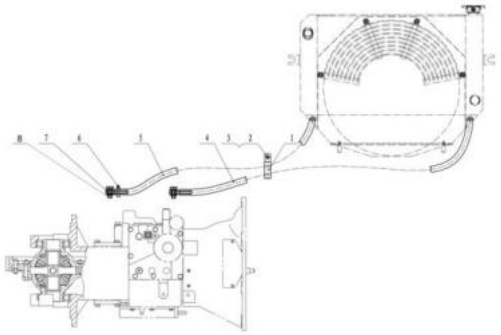

变矩器油冷系统/TOR-CONOILCOOLINGSYSTEM(2.5-3.5t)					
序号/NO	编码/SN	名称	Name	数量/QTY	备注/Remark
A	-	变矩器油冷却系统	tor-con oil cooling system	1	
1	RF035-4-4700001-A0	管夹	Clip	2	
2	910400500005	垫圈6GB/T93-1987	Washer 6	2	
3	910100300009	螺栓M6×12GB/T5783-2000	Bolt M6×12	2	
4	RF035-2-4700002-A0	变矩器油管φ11×5-1700	Tor-con hose φ11×5-1700	1	
5	RF035-2-4700003-A0	变矩器油管φ11×5-1500	Tor-con hose φ11×5-1500	1	
6	911000600013	喉箍d25JB/T8870-1999	Hoop d25	4	
7	RF035-2-4701000-A0	铰接螺栓	Connecting bolt	2	
8	910800900004	组合垫圈14JB/T982-1977	Bonded washer 14	4	

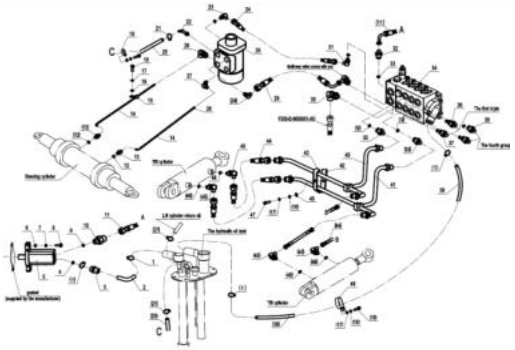

液压系统/HYDRAULICSYSTEM(2.5-3.5t)					
序号/NO	编码/SN	名称	Name	数量/QTY	备注/Remark
A	-	液压管路系统	Hydraulic Piping system	1	2.0-3.5t
1	293098591036	喉箍φ32-45QC/T390-1999	Hose clampΦ32-45	4	
2	F030-D-7600001-A0	泵吸油管	Pump oil suction pipe	1	洋马
2	F030-D-7600013-A0	泵吸油管	Pump oil suction pipe	1	S4S
2	F030-DV-7600001-A0	泵吸油管	Pump oil suction pipe	1	LS
2	F030-DX-7600001-A0	泵吸油管	Pump oil suction pipe	1	新柴
2	F030-GLHH-7600001-A0	泵吸油管	Pump oil suction pipe	1	双燃料
2	F030-DC-7600001-A0	泵吸油管	Pump oil suction pipe	1	新柴欧5
3	RF035-4-7600001-A0	泵进油接头	Pump oil suction fitting	1	
3	F030-DV-7601000-A0	泵进油接头	Pump oil suction fitting	1	LS
4	910800100006	O形圈35×3.5GB1235-76	O-ring 35×3.5	1	
4	910800100056	O型圈 40×3.5GB/T1235-76	O-ring 40×3.5	1	LS
5	RF035-4-7602000-A0	齿轮泵	Gear pump	1	洋马
5	F030-DV-7603000-A0	齿轮泵	Gear pump	1	LS
5	RF035-4-7602200-A0	齿轮泵	Gear pump	1	三菱S4S
5	F030-D-7602200-A0	齿轮泵	Gear pump	1	新柴
5	F030-GLH-7601000-A0	齿轮泵	Gear pump	1	双燃料
6	910400100007	垫圈10GB/T97.1-2002	Washer 10	2	
7	910400500007	垫圈10GB/T93-1987	Washer 10	2	
8	910100300038	螺栓M10×35GB/T5783-2000	Bolt M10×35	2	足桑K25、大柴、YANMAR9
9	910800100100	O形圈22×2.4GB1235-76	O-ring 22×2.4	8	
9	910800100024	O型圈 30×3.5GB/T1235-76	O-ring 30×3.5	1	LS
10	F030-D-7600002-A0	泵出油接头	Pump oil outlet fitting	1	马、三菱S4S、新柴、双燃
10	F030-DV-7603000-A0	泵出油接头	Pump oil outlet fitting	1	LS
11	F030-D-7600003-A1	多路阀进油胶管	Multi-way valve oil inlet H.P.hose	1	马、三菱S4S、新柴、双燃
11	F030-DV-7600002-A0	多路阀进油胶管	Multi-way valve oil inlet H.P.hose	1	LS
11	F030-GLH-7600002-A0	多路阀进油胶管	Multi-way valve oil inlet H.P.hose	1	双燃料
11	F030-DC-7600002-A0	多路阀进油胶管	Multi-way valve oil inlet H.P.hose	1	新柴欧5
12	910800100039	O形圈18×2.4GB/T1235-76	O-ring 18×2.4	2	
13	F030-D-7600004-A0	转向缸接头	Steering cylinder connector	2	
14	F030-D-7600005-A0	转向缸胶管Ⅰ	Steering cylinder H.P. hose Ⅰ	1	2.5-3.5t

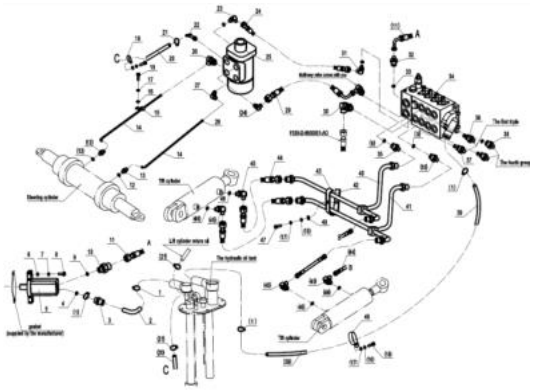

液压系统/HYDRAULICSYSTEM(2.5-3.5t)					
序号/NO	编码/SN	名称	Name	数量/QTY	备注/Remark
15	RF035-4-7600005-A0	油管夹	Oil Pipe clamp	5	
16	910400100005	垫圈 6GB/T97.1-2002	Washer 6	15	
17	910400500005	垫圈 6GB/T93-1987	Washer 6	15	
18	910100300009	螺栓 M6×12GB/T5783-2000	Bolt M6×12	14	
19	GMS-DJR20	卡箍	Hose clamp 20	5	
20	F030-D-7600006-A0	转向器回油胶管	Orbitrol oil returning pipe	1	
21	911000600012	喉箍φ22JB/T8870-1999	Hose clampΦ22	4	
22	RF035-4-7604000-A0	转向器回油接头	Orbitrol oil returning pipe connector	1	
23	255023510003	转向器转向优先接头	Steering gear steering priority connector	1	
24	F030-D-7610000-B0	转向优先胶管	Steering priority hose	1	
25	255015010012	转向器	Orbitrol	1	（带转向优先）
26	F030-D-7601000-A0	转向器接头Ⅰ	Orbitrol connector	1	
27	F030-D-7602000-A0	转向器接头Ⅱ	Orbitrol connector	2	
28	F030-D-7600007-A0	转向缸胶管Ⅱ	Steering cylinder H.P. hose Ⅰ	1	
29	F030-D-7609000-B0	转向器进油胶	Orbitrol Oil inlet H.P. hose	1	
30	255044020143	多路阀-起升缸接头	Multi-valve connector(lift cylinder)	1	
31	255023510001	多路阀-转向优先接头	Multiway valve - steering priority connector	1	
32	F030-D-7604000-A0	多路阀进油接头	Valve connector,oil-inlet	1	
33	910800100040	O型圈 24×2.4GB1235-76	O-ring 24×2.4	1	
34	F030-D-7605100-B0	多路阀	Multi-way valve	1	二联
34	F030-D-7605200-B0	多路阀	Multi-way valve	1	三联
34	F030-D-7605300-B0	多路阀	Multi-way valve	1	四联
35	F030-D-7600009-A0	多路阀-倾斜缸接头	Multi-valve connector (tilt cyliner)	2	外购
36	281225010001	多路阀-侧移接头I	Multiway valves - Side shift connector Ⅰ	2	三联、四联
37	255023510007	多路阀-侧移接头II	Multiway valves - Side shift connector II	2	三联、四联
39	F030-D-7600011-A0	液压回油管	Oil-returning hose	1	马、三菱S4S、新柴、双燃
39	F030-GLHH-7600002-A0	液压回油管	Oil-returning hose	1	双燃料
40	F030-D-7606000-A0	倾斜硬管Ⅰ	Tilting cylinder pipe Ⅰ	1	
41	F030-D-7607000-A0	倾斜硬管Ⅱ	Tilting cylinder pipe Ⅱ	1	
42	RF035-4-7600012-A0	硬管卡Ⅰ	Clip Ⅰ	1	
43	RF035-4-7600013-A0	硬管线卡Ⅱ	Clip Ⅱ	1	

液压系统/HYDRAULICSYSTEM(2.5-3.5t)

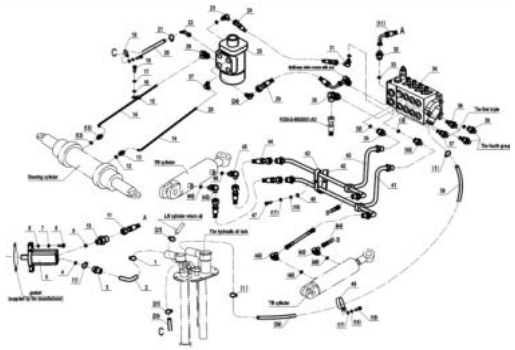

序号/NO	编码/SN	名称	Name	数量/QTY	备注/Remark
44	F030-D-7600012-A0	硬管-倾斜缸胶管	Tilt cylinder hose (front)	4	
45	251223510003	倾斜缸接头	Tilt cylinder connector	4	
46	910800100021	O型圈 11.2×2.65GB/T3452.1-1992	O-ring 11.2×2.65	4	
47	910100300012	螺栓 M6×25GB/T5783-2000	Bolt M6×25	2	
48	910300100005	螺母 M6GB/T6170-2000	Nut M6	2	
49	GMS-DJR45	箍	Clip	2	

293098501036倾斜油缸/TILT CYLINDER (3.0-3.5t)

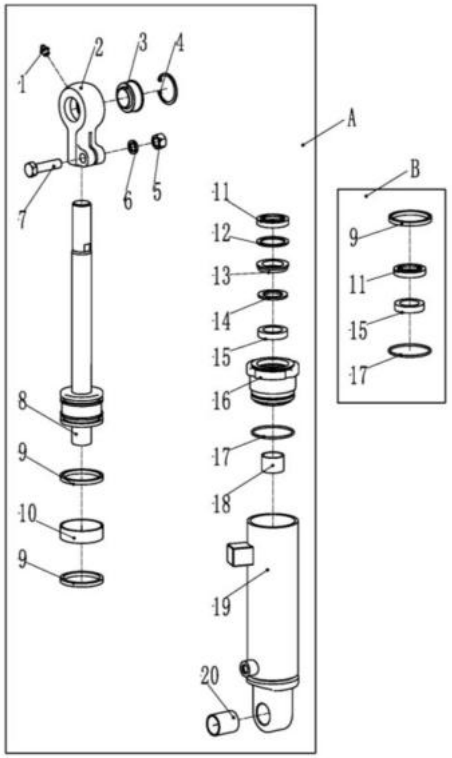

序号/NO	编码/SN	名称	Name	数量/QTY	备注/Remark
A	293020510001	油缸(TL)(TL)Φ80xΦ35x118(6/10)	Oil cylinder(TL)Φ80xΦ35x118(6/10)	1	H≤3700,Left
A	293020510002	油缸(TL)(TL)Φ80xΦ35x88.5(6/6)	Oil cylinder(TL)Φ80xΦ35x88.5(6/6)	1	3700<H≤5000,Left
A	293020510003	油缸(TL)(TL)Φ80xΦ35x67(6/10)	Oil cylinder(TL)Φ80xΦ35x67(3/6)	1	5000<H,Left
A	293020510004	油缸(TL)(TR)Φ80xΦ35x118(6/10)	Oil cylinder(TR)Φ80xΦ35x118(6/10)	1	H≤3700,Right
A	293020510005	油缸(TL)(TRL)Φ80xΦ35x88.5(6/6)	Oil cylinder(TR)Φ80xΦ35x88.5(6/6)	1	3700<H≤5000,Right
A	293020510006	油缸(TL)(TR)Φ80xΦ35x67(6/10)	Oil cylinder(TR)Φ80xΦ35x67(3/6)	1	5000<H,Right
B	293098510006	密封件修理包(倾斜缸)	Seal kits (tlited cylinder)	2	
1	▲	直通式滑脂嘴Z1/8	Grease mouth Z1/8	2	
2	▲	耳环	Earring	2	
3	▲	关节轴承GE30ES	Bearing GE30ES	2	
4	▲	挡圈47	Circlip 47	2	
5	▲	螺母M14	Nut M14	2	
6	▲	垫圈14	Washer14	2	
7	▲	螺栓M14x55	Bolt M14x55	2	
8	▲	活塞体总成	Piston body assembly	2	
9	▲	Yx型密封圈	Yx seal ring	2	
10	▲	支承环D63x20x2.5	Support ring	2	
11	▲	防尘圈	Dust ring	2	
12	▲	挡圈52	Circlip 52	2	
13	▲	挡圈	Circlip	2	
14	▲	挡片48x30x3	Catch 48x30x3	2	
15	▲	U型密封圈	Useal ring 48x30x10	2	
16	▲	导向套	Guide sleeve	2	
17	▲	O型密封圈	O seal ring 63x3.1	2	
18	▲	钢背轴承3025	Bearing 3025	2	
19	▲	缸筒总成	Cylinder barrel assembly	2	
20	▲	钢背轴承3040	Bearing 3040	2	

293198501037倾斜油缸/TILT CYLINDER (25)

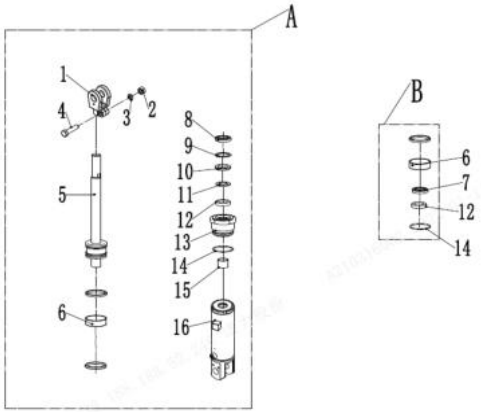

序号/NO	编码/SN	名称	Name	数量/QTY	备注/Remark
A	293120510001	油缸(TL)Φ70xΦ32x118(6/10)	Oil cylinder(TL)Φ70xΦ32x118(6/10)	1	H≤3700,Left
A	293120510002	油缸(TL)Φ70xΦ32x88.5(6/6)	Oil cylinder(TL)Φ70xΦ32x88.5(6/6)	1	3700<H≤5000,Left
A	293120510003	油缸(TL)Φ70xΦ32x67(3/6)	Oil cylinder(TL)Φ70xΦ32x67(3/6)	1	5000<H,Left
A	293120510005	油缸(TR)Φ70xΦ32x118(6/10)	Oil cylinder(TR)Φ70xΦ32x118(6/10)	1	H≤3700,Right
A	293120510006	油缸(TR)Φ70xΦ32x88.5(6/6)	Oil cylinder(TR)Φ70xΦ32x88.5(6/6)	1	3700<H≤5000,Right
A	293120510007	油缸(TR)Φ70xΦ32x67(3/6)	Oil cylinder(TR)Φ70xΦ32x67(3/6)	1	5000<H,Right
B	293198510006	密封件修理包(倾斜缸)	Seal kits (tlited cylinder)	2	
1	▲	耳环	Earring	2	
2	▲	螺母M14	NutM14	2	
3	▲	垫圈14	Washer14	2	
4	▲	螺栓M14x55	BoltM14x55	2	
5	▲	活塞杆	Piston rod	1	
6	▲	支承环D63x20x2.5	Support ring D60x20x2.5	2	
7	▲	Yx型密封圈D63X60X6	Yx seal ring D63x60x6	2	
8	▲	防尘圈	Dust ring	2	
9	▲	挡圈47	Circlip 47	2	
10	▲	挡圈	Circlip	2	
11	▲	挡片48x30x3	Catch 48x30x3	2	
12	▲	U型密封圈	Useal ring 48x30x10	2	
13	▲	导向套	Guide sleeve	2	
14	▲	O型密封圈63x3.1	O seal ring 63x3.1	2	
15	▲	钢背轴承3025	Bearing 3025	2	
16	▲	缸筒总成	Cylinder barrel assembly	2	

293098501038门架(标准门架25)/MAST(stand mast25)

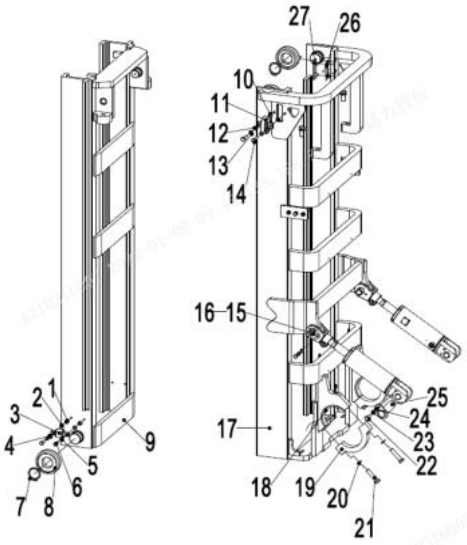

序号/NO	编码/SN	名称	Name	数量/QTY	备注/Remark
1	255038020008	调整套	Adjusting sleeve	4	
2	255038020009	调整垫	Adjustable pad	8	
3	940200200005	侧滚轮Φ42-CD=68	Side rollerΦ42 - CD = 68	2	
4	910400100007	平垫圈GB97.1-10-200HV	Washer GB97.1-10-200HV	8	
5	910400500007	弹簧垫圈GB93-10	Spring washer GB93-10	8	
6	910100300039	螺栓GB5783-M10x40-8.8	Bolt GB5783 M10x40-8.8	4	
7	910401300020	轴用弹性挡圈GB894.1-40	Elastic retaining ring GB894.1-40 for shaft	4	
8	940200100020	主滚轮Φ119.2xΦ55x34	Roller Φ119.2xΦ55x34	4	
8	940200100021	主滚轮Φ119.6xΦ55x34	Roller Φ119.6xΦ55x34	4	
8	940200100022	主滚轮Φ120xΦ55x34	Roller Φ120xΦ55x34	4	
9	256744012001	内门架焊合(2000)	Mast (2000)	1	2.5t
9	256744012002	内门架焊合(2500)	Mast (2500)	1	2.5t
9	256744012003	内门架焊合(3000)	Mast (3000)	1	2.5t
9	256744012004	内门架焊合(3300)	Mast (3300)	1	2.5t
9	256744012005	内门架焊合(3500)	Mast (3500)	1	2.5t
9	256744012006	内门架焊合(3600)	Mast (3600)	1	2.5t
9	256744012007	内门架焊合(3700)	Mast (3700)	1	2.5t
9	256744012008	内门架焊合(4000)	Mast (4000)	1	2.5t
9	256744012009	内门架焊合(4300)	Mast (4300)	1	2.5t
9	256744012010	内门架焊合(4500)	Mast (4500)	1	2.5t
9	256744012011	内门架焊合(5000)	Mast (5000)	1	2.5t
9	256744012012	内门架焊合(5500)	Mast (5500)	1	2.5t
9	256744012013	内门架焊合(6000)	Mast (6000)	1	2.5t
10	255038020009	调整垫	Adjustable pad	4	
11	940200200002	侧滚轮Φ87-CD=55	Side roller Φ87-CD=55	2	
12	910400100008	平垫圈GB97.1-12-200HV	Washer GB97.1-12-200HV	4	
13	910400500008	弹簧垫圈GB93-12	Washer GB93-12	6	
14	910100300050	螺栓GB5783-M12x30-8.8	Bolt GB5783-M12x30-8.8	4	
15	2930844510001	带耳轴Φ30x110	AxleΦ30x110	2	
16	272344021080	耐磨套Φ30xΦ38x25	the wear-proof casing	2	
17	293144011001	外门架焊合(2000)	Mast (2000)	1	

293098501038门架(标准门架25)/MAST(stand mast25)

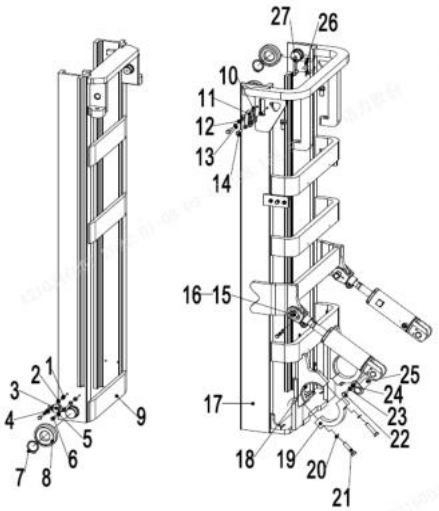

序号/NO	编码/SN	名称	Name	数量/QTY	备注/Remark
17	293144011002	外门架焊合(2500)	Mast (2500)	1	
17	293144011003	外门架焊合(3000)	Mast (3000)	1	
17	293144011004	外门架焊合(3300)	Mast (3300)	1	
17	293144011005	外门架焊合(3500)	Mast (3500)	1	
17	293144011006	外门架焊合(3600)	Mast (3600)	1	
17	293144011007	外门架焊合(3700)	Mast (3700)	1	
17	293144011008	外门架焊合(4000)	Mast (4000)	1	
17	293144011009	外门架焊合(4300)	Mast (4300)	1	
17	293144011010	外门架焊合(4500)	Mast (4500)	1	
17	293144011011	外门架焊合(5000)	Mast (5000)	1	
17	293144011012	外门架焊合(5500)	Mast (5500)	1	
17	293144011013	外门架焊合(6000)	Mast (6000)	1	
18	254144020063	轴瓦	Bearing bush	2	
19	255044020005	支座盖	Bearing cover	2	
20	910400500010	弹簧垫圈GB93-16	Washer GB93-16	6	
21	910100200016	螺栓GB5785-M16x1.5x70-8.8	Bolt GB5785-M16x1.5x70-8.8	4	
22	910100300035	螺栓GB5783-M10x20-8.8	Bolt GB5783-M10x20-8.8	4	
23	910400100007	平垫圈GB97.1-10-200HV	Washer GB97.1-10-200HV	8	
24	910400500007	弹簧垫圈GB93-10	Washer GB93-10	8	
25	255044010057	带耳轴Φ30x82	AxleΦ30x82	2	
26	255044020132	调整垫片t=0.8	Adjusting pad t=0.8	2	
26	255044020133	调整垫片t=0.5	Adjusting pad t=0.5	2	
26	255044020134	调整垫片t=0.2	Adjusting pad t=0.2	2	
27	255044020131	垫板	Base plate	2	

293098501039门架(标准门架30-35)/MAST(stand mast30-35)

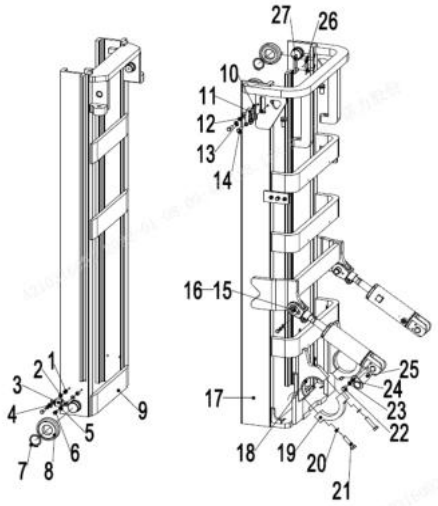

序号/NO	编码/SN	名称	Name	数量/QTY	备注/Remark
1	255038020008	调整套	Adjusting sleeve	4	
2	255038020009	调整垫	Adjustable pad	8	
3	940200200005	侧滚轮Φ42-CD=68	Side rollerΦ42 - CD = 68	2	
4	910400100007	平垫圈GB97.1-10-200HV	Washer GB97.1-10-200HV	8	
5	910400500007	弹簧垫圈GB93-10	Spring washer GB93-10	8	
6	910100300039	螺栓GB5783-M10x40-8.8	Bolt GB5783 M10x40-8.8	4	
7	910401300020	轴用弹性挡圈GB894.1-40	Elastic retaining ring GB894.1-40 for shaft	4	
8	940200100020	主滚轮Φ119.2xΦ55x34	Roller Φ119.2xΦ55x34	4	
8	940200100021	主滚轮Φ119.6xΦ55x34	Roller Φ119.6xΦ55x34	4	
8	940200100022	主滚轮Φ120xΦ55x34	Roller Φ120xΦ55x34	4	
9	256844012001	内门架焊合(2000)	Inner Mast (2000)	1	3.0T
9	256844012002	内门架焊合(2500)	Inner Mast (2500)	1	3.0T
9	256844012003	内门架焊合(3000)	Inner Mast (3000)	1	3.0T
9	256844012004	内门架焊合(3300)	Inner Mast (3300)	1	3.0T
9	256844012005	内门架焊合(3500)	Inner Mast (3500)	1	3.0T
9	256844012006	内门架焊合(3600)	Inner Mast (3600)	1	3.0T
9	256844012007	内门架焊合(3700)	Inner Mast (3700)	1	3.0T
9	256844012008	内门架焊合(4000)	Inner Mast (4000)	1	3.0T
9	256844012009	内门架焊合(4300)	Inner Mast (4300)	1	3.0T
9	256844012010	内门架焊合(4500)	Inner Mast (4500)	1	3.0T
9	256844012011	内门架焊合(5000)	Inner Mast (5000)	1	3.0T
9	256844012012	内门架焊合(5500)	Inner Mast (5500)	1	3.0T
9	256844012013	内门架焊合(6000)	Inner Mast (6000)	1	3.0T
9	256844012051	内门架焊合(2000)	Inner mast(2000)	1	3.5T
9	256844012052	内门架焊合(2500)	Inner mast(2500)	1	3.5T
9	256844012053	内门架焊合(3000)	Inner mast(2700)	1	3.5T
9	256844012054	内门架焊合(3300)	Inner mast(3000)	1	3.5T
9	256844012055	内门架焊合(3500)	Inner mast(3300)	1	3.5T
9	256844012056	内门架焊合(3600)	Inner mast(3500)	1	3.5T
9	256844012057	内门架焊合(3700)	Inner mast(3700)	1	3.5T
9	256844012058	内门架焊合(4000)	Inner mast(4000)	1	3.5T

293098501039门架(标准门架30-35)/MAST(stand mast30-35)

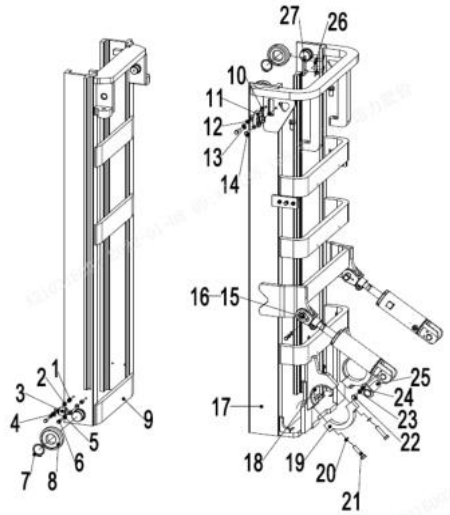

序号/NO	编码/SN	名称	Name	数量/QTY	备注/Remark
9	256844012059	内门架焊合(4300)	Inner mast(4300)	1	3.5T
9	256844012060	内门架焊合(4500)	Inner mast(4500)	1	3.5T
9	256844012061	内门架焊合(5000)	Inner mast(5000)	1	3.5T
9	256844012062	内门架焊合(5500)	Inner mast(5500)	1	3.5T
9	256844012063	内门架焊合(6000)	Inner mast(6000)	1	3.5T
10	255038020009	调整垫	Adjustable pad	4	
11	940200200002	侧滚轮Φ87-CD=55	Side roller Φ87-CD=55	2	
12	910400100008	平垫圈GB97.1-12-200HV	Washer GB97.1-12-200HV	4	
13	910400500008	弹簧垫圈GB93-12	Washer GB93-12	6	
14	910100300050	螺栓GB5783-M12x30-8.8	Bolt GB5783-M12x30-8.8	4	
15	293044510001	带耳轴Φ30x110	Axle Φ30x110	2	3.0T
16	293044011001	外门架焊合(2000)	Outer mast(2000)	1	3.0T
16	293044011002	外门架焊合(2500)	Outer mast(2500)	1	3.0T
16	293044011003	外门架焊合(3000)	Outer mast(3000)	1	3.0T
16	293044011004	外门架焊合(3300)	Outer mast(3300)	1	3.0T
16	293044011005	外门架焊合(3500)	Outer mast(3500)	1	3.0T
16	293044011006	外门架焊合(3600)	Outer mast(3600)	1	3.0T
16	293044011007	外门架焊合(3700)	Outer mast(3600)	1	3.0T
16	293044011008	外门架焊合(4000)	Outer mast(4000)	1	3.0T
16	293044011009	外门架焊合(4300)	Outer mast(4300)	1	3.0T
16	293044011010	外门架焊合(4500)	Outer mast(4500)	1	3.0T
16	293044011011	外门架焊合(5000)	Outer mast(5000)	1	3.0T
16	293044011012	外门架焊合(5500)	Outer mast(5500)	1	3.0T
16	293044011013	外门架焊合(6000)	Outer mast(6000)	1	3.0T
16	293044011051	外门架焊合(2000)	Outer mast(2000)	1	3.5T
16	293044011052	外门架焊合(2500)	Outer mast(2500)	1	3.5T
16	293044011053	外门架焊合(3000)	Outer mast(3000)	1	3.5T
16	293044011054	外门架焊合(3300)	Outer mast(3300)	1	3.5T
16	293044011055	外门架焊合(3500)	Outer mast(3500)	1	3.5T
16	293044011056	外门架焊合(3600)	Outer mast(3600)	1	3.5T
16	293044011057	外门架焊合(3700)	Outer mast(3600)	1	3.5T

293098501039门架(标准门架30-35)/MAST(stand mast30-35)

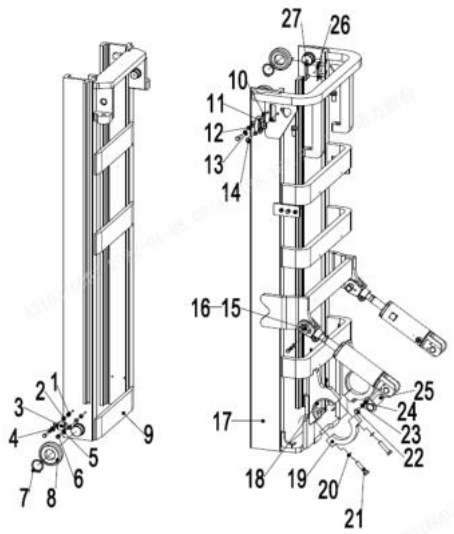

序号/NO	编码/SN	名称	Name	数量/QTY	备注/Remark
16	293044011058	外门架焊合(4000)	Outer mast(4000)	1	3.5T
16	293044011059	外门架焊合(4300)	Outer mast(4300)	1	3.5T
16	293044011060	外门架焊合(4500)	Outer mast(4500)	1	3.5T
16	293044011061	外门架焊合(5000)	Outer mast(5000)	1	3.5T
16	293044011062	外门架焊合(5500)	Outer mast(5500)	1	3.5T
16	293044011063	外门架焊合(6000)	Outer mast(6000)	1	3.5T
17	254144020063	轴瓦	Bearing bush	2	
18	255044020005	支座盖	Bearing cover	2	
19	910400500010	弹簧垫圈GB93-16	Washer GB93-16	6	
20	910100200016	螺栓GB5785-M16x1.5x70-8.8	Bolt GB5785-M16x1.5x70-8.8	4	
21	910100300035	螺栓GB5783-M10x20-8.8	Bolt GB5783-M10x20-8.8	4	
22	910400100007	平垫圈GB97.1-10-200HV	Washer GB97.1-10-200HV	8	
23	910400500007	弹簧垫圈GB93-10	Washer GB93-10	8	
24	255044010057	带耳轴Φ30x82	AxleΦ30x82	2	
25	255044020132	调整垫片t=0.8	Adjusting pad t=0.8	2	
25	255044020133	调整垫片t=0.5	Adjusting pad t=0.5	2	
25	255044020134	调整垫片t=0.2	Adjusting pad t=0.2	2	
26	255044020131	垫板	Base plate	2	

293098501040货叉架(标准门架)/FORK ARM CARRIER(stand mast)

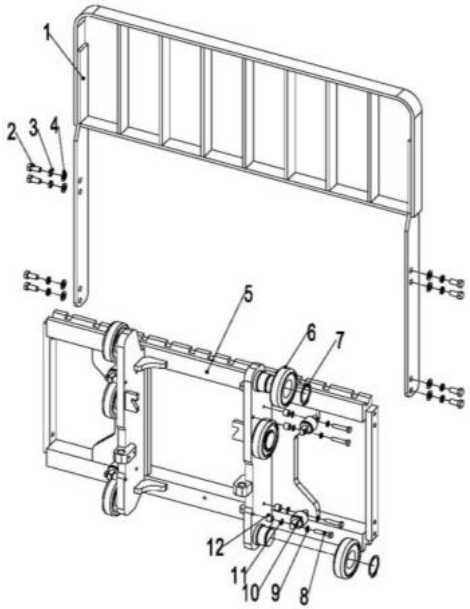

序号/NO	编码/SN	名称	Name	数量/QTY	备注/Remark
1	253540510001	挡货架焊合(1100x10800)	Load backrest welding	1	3.5T
1	255040510001	挡货架焊合(1040x986)	Load backrest welding (1040x986)	1	2.5T
2	910100300062	螺栓GB5783-M14x30-8.8	Bolt GB5783-M14x30-8.8	4	
3	910400500009	弹簧垫圈GB93-14	Washer GB93-14	4	
4	910400100009	平垫圈GB97.1-14-200HV	Washer GB97.1-14-200HV	4	
5	256738010001	货叉架焊合(标准门架)	Fork carrier weldind (standard mast)	1	2.5T
5	256838011001	货叉架焊合(标准门架)	Fork carrier weldind (standard mast)	1	3.0T
5	256838011051	货叉架焊合(标准门架35)	Fork carrier weldind (standard mast 35)	1	3.5T
6	940200100020	主滚轮Φ119.2xΦ55x34	Main roller Φ119.2xΦ55x34	6	选装
6	940200100021	主滚轮Φ119.6xΦ55x34	Main roller Φ119.6xΦ55x34	6	选装
6	940200100022	主滚轮Φ120xΦ55x34	Main roller Φ120xΦ55x34	6	选装
7	910401300026	轴用弹性挡圈GB894.1-55	Circlip GB894.1-55	6	
8	910100300042	螺栓GB5783-M10x60-8.8	Bolt GB5783-M10x60-8.8	8	
9	910400500007	弹簧垫圈GB93-10	Washer GB93-10	8	
10	940200200005	侧滚轮Φ42-CD=68	Side roller Φ 42 - CD = 68	4	
11	255038020009	调整垫	Adjustable pad	24	
12	255038020008	调整套	Adjusting sleeve	8	

293098501041起升油缸（标准门架)/LIFTING CYLINDER（stand mast）

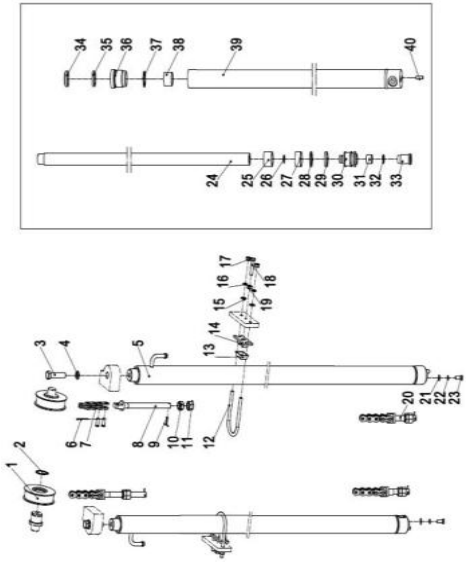

序号/NO	编码/SN	名称	Name	数量/QTY	备注/Remark
1	940200500005	链轮轴承780708K-φ110xφ40x27	Chain wheel bearing780708K-φ110xφ40x27	2	
2	910401300020	轴用弹性挡圈GB894.1-40	Circlip GB894.1-40	2	
3	910400500010	弹簧垫圈GB93-16	Washer GB93-16	4	
4	910100400029	螺栓GB5786-M16x1.5x40-8.8	Bolt GB5786-M16x1.5x40-8.8	2	
5	255044010043	油缸(H=2000)	Cylinder Φ56xΦ45x995(H=2000)	2	2.5T
5	255044010044	油缸(H=2500)	Cylinder Φ56xΦ45x1245(H=2500)	2	
5	255044010055	油缸(H=3000)	Cylinder Φ56xΦ45x1495(H=3000)	2	
5	255044010045	油缸(H=3300)	Cylinder Φ56xΦ45x1645(H=3300)	2	
5	255044010046	油缸(H=3500)	Cylinder Φ56xΦ45x1745(H=3500)	2	
5	255044010047	油缸(H=3600)	Cylinder Φ56xΦ45x1795(H=3600)	2	
5	255044010048	油缸(H=3700)	Cylinder Φ56xΦ45x1845(H=3700)	2	
5	255044010049	油缸(H=4000)	Cylinder Φ56xΦ45x2045(H=4000)	2	
5	255044010050	油缸(H=4300)	Cylinder Φ56xΦ45x2195(H=4300)	2	
5	255044010051	油缸(H=4500)	Cylinder Φ56xΦ45x2295(H=4500)	2	
5	255044010052	油缸(H=5000)	Cylinder Φ56xΦ45x2595(H=5000)	2	
5	255044010053	油缸(H=5500)	Cylinder Φ56xΦ45x2845(H=5500)	2	
5	255044010054	油缸(H=6000)	Cylinder Φ56xΦ45x3095(H=6000)	2	
5	256044016001	油缸(H=2000)	Cylinder Φ56xΦ45x995(H=2000)	2	3.0-3.5T
5	256044016002	油缸(H=2500)	Cylinder Φ56xΦ45x1245(H=2500)	2	
5	256044016003	油缸(H=3000)	Cylinder Φ56xΦ45x1495(H=3000)	2	
5	256044016004	油缸(H=3300)	Cylinder Φ56xΦ45x1645(H=3300)	2	
5	256044016005	油缸(H=3500)	Cylinder Φ56xΦ45x1745(H=3500)	2	
5	256044016006	油缸(H=3600)	Cylinder Φ56xΦ45x1825(H=3600)	2	
5	256044016007	油缸(H=3700)	Cylinder Φ56xΦ45x1845(H=3700)	2	
5	256044016008	油缸(H=4000)	Cylinder Φ56xΦ45x1995(H=4000)	2	
5	256044016008	油缸(H=4000)	Cylinder Φ56xΦ45x1995(H=4000)	2	3.0-3.5T
5	256044016009	油缸(H=4300)	Cylinder Φ56xΦ45x2120(H=4300)	2	
5	256044016010	油缸(H=4500)	Cylinder Φ56xΦ45x2245(H=4500)	2	
5	256044016011	油缸(H=5000)	Cylinder Φ56xΦ45x2495(H=5000)	2	
5	256044016012	油缸(H=5500)	Cylinder Φ56xΦ45x2745(H=5500)	2	
5	256044016013	油缸(H=6000)	Cylinder Φ56xΦ45x2995(H=6000)	2	

293098501041起升油缸（标准门架)/LIFTING CYLINDER（stand mast）

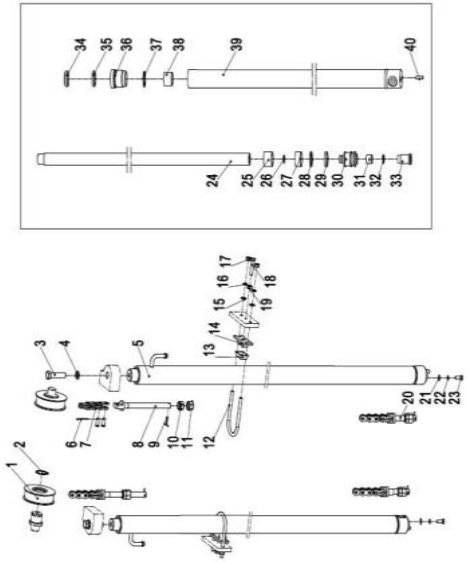

序号/NO	编码/SN	名称	Name	数量/QTY	备注/Remark
6	▲	开口销2.5x40	Split pin 2.5x40	2	
7	▲	LH1623板式链	LH1623 chain	2	2.5-3.0T
7	910900400015	LH1634板式链	LH1634 chain	2	3.5T
8	▲	长端接头	Joint	2	2.5-3.0T
8	254044020062	长端接头	Joint	2	3.5T
9	▲	开口销3.2x30	Split pin 3.2x30	2	
10	▲	球面螺母M18x1.5	Nut M18x1.5	2	2.5-3.0T
10	256144020001	球面螺母M22x1.5	Nut M22x1.5	2	3.5T
11	▲	螺母M18x1.5	Nut M18x1.5	2	2.5-3.0T
11	255013520002	螺母M20x1.5	Nut M20x1.5	2	3.5T
12	255044020128	U形螺栓Φ68	Fixing ring	2	
13	255044020129	防护罩	Rubber bushing	2	
14	255044020130	固定座（油缸）	Fixing seat	2	
15	910400100007	平垫圈GB97.1-16-200HV	Washer GB97.1-16-200HV	4	
16	910400500007	弹簧垫圈GB93-10	Washer GB93-10	4	
17	910300200002	螺母GB6171-M10x1.25-10	Nut GB6171-M10x1.25-10	4	
18	910100300041	螺栓GB5783-M10x50-8.8	Bolt GB5783-M10x50-8.8	2	
19	910300100007	螺母GB6170-M10-10	Nut GB6170-M10-10	2	
20	▲	短端接头	Joint	2	2.5-3.0T
20	▲	短端接头	Joint	2	
21	910400100008	平垫圈GB97.1-12-200HV	Washer GB97.1-12-200HV	2	
22	910400500008	弹簧垫圈GB93-12	Washer GB93-12	2	
23	910100400009	螺栓GB5786-M12x1.25x25-8.8	Bolt GB5786-M12x1.25x25-8.8	2	
24	▲	活塞杆	Piston rod	1	
25	▲	调整套40.5x49xL2	Adjusting bushing 40.5x49xL2	1	
26	▲	钢丝挡圈	Circlip	1	
27	▲	支承环56x20x2.5	Bearing 50x20x2.5	1	
28	▲	挡片56x45x3	Catch 50x40x3	1	
29	▲	孔用密封圈	Seal ring 50x40x6	1	
30	▲	活塞	Piston rod	1	
31	▲	铜套	Copper bushing	1	

293098501041起升油缸（标准门架)/LIFTING CYLINDER（stand mast）

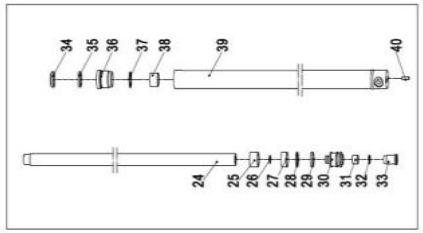

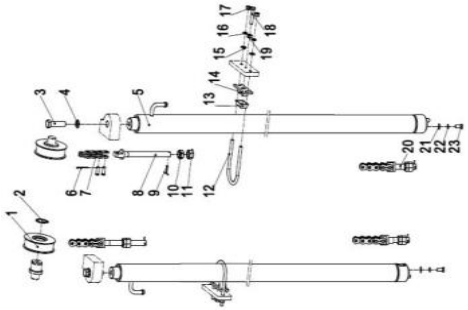

序号/NO	编码/SN	名称	Name	数量/QTY	备注/Remark
32	▲	钢丝挡圈	Circlip	1	
33	▲	缓冲环	Buffering ring	1	
34	▲	防尘圈	Dust ringDKB40x52x7/10	1	
35	▲	轴用密封圈	Seal ring 40x50x6	1	
36	▲	导向套	Guide sleeve	1	
37	▲	O型密封圈	O ring 49.7x2.4	1	
38	▲	钢背轴承4530	Bearing 4030	1	
39	▲	缸体	Cylinder	1	
40	▲	圆柱销D10x26	Dowel pin	1	
41	256098510001	密封件修理包(标准门架起升缸)	Seal kits(standard mast lifting cylinder)	2	包含/Inc. 27,29,34,35,37
A	255043510139	起升链条LH1623-79/H=3000	Lifting chain LH1623-77	2	2.5-3.2T
A	255044510133	起升链条LH1623-59/H=2000	Lifting chain LH1623-57	2	
A	255043510085	起升链条LH1623-69/H=2500	Lifting chain LH1623-67	2	
A	255044510140	起升链条LH1623-85/H=3300	Lifting chain LH1623-83	2	2.5-3.0T
A	255043510088	起升链条LH1623-89/H=3500	Lifting chain LH1623-87	2	
A	255044010107	起升链条LH1623-91/H=3600	Lifting chain LH1623-89	2	
A	253543510066	起升链条LH1623-93/H=3700	Lifting chain LH1623-91	2	
A	255043510107	起升链条LH1623-101/H=4000	Lifting chain LH1623-99	2	
A	253544510027	起升链条LH1623-107/H=4300	Lifting chain LH1623-105	2	
A	255043510090	起升链条LH1623-111/H=4500	Lifting chain LH1623-109	2	
A	253511010064	起升链条LH1623-121/H=5000	Lifting chain LH1623-121	2	
A	256044014001	起升链条LH1623-133/H=5500	Lifting chain LH1623-131	2	
A	256044014002	起升链条LH1623-143/H=6000	Lifting chain LH1623-141	2	
B	263044510025	起升链条LH1634-59/H=2000	Lifting chain LH1634-59	2	3.5T
B	256144014001	起升链条LH1634-69/H=2500	Lifting chain LH1634-69	2	
B	263044010042	起升链条LH1634-79/H=3000	Lifting chain LH1634-79	2	
B	263043510065	起升链条LH1634-85/H=3300	Lifting chain LH1634-85	2	
B	263044510006	起升链条LH1634-89/H=3500	Lifting chain LH1634-89	2	
B	254044010057	起升链条LH1634-91/H=3600	Lifting chain LH1634-91	2	
B	254044010058	起升链条LH1634-93/H=3700	Lifting chain LH1634-93	2	
B	254044510027	起升链条LH1634-101/H=4000	Lifting chain LH1634-101	2	

293098501041起升油缸（标准门架)/LIFTING CYLINDER（stand mast）

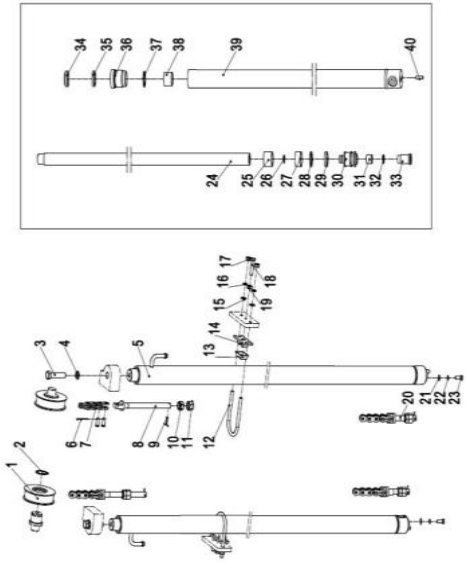

序号/NO	编码/SN	名称	Name	数量/QTY	备注/Remark
B	263044510008	起升链条LH1634-107/H=4300	Lifting chain LH1634-107	2	
B	254044010061	起升链条LH1634-111/H=4500	Lifting chain LH1634-111	2	
B	256144014002	起升链条LH1634-121/H=5000	Lifting chain LH1634-121	2	
B	256144014003	起升链条LH1634-133/H=5500	Lifting chain LH1634-133	2	
B	256144014004	起升链条LH1634-143/H=6000	Lifting chain LH1634-143	2	3.5T

293098501042门架起升管路（标准门架）/SINGLE ADDITIONAL TUBE(stand mast)

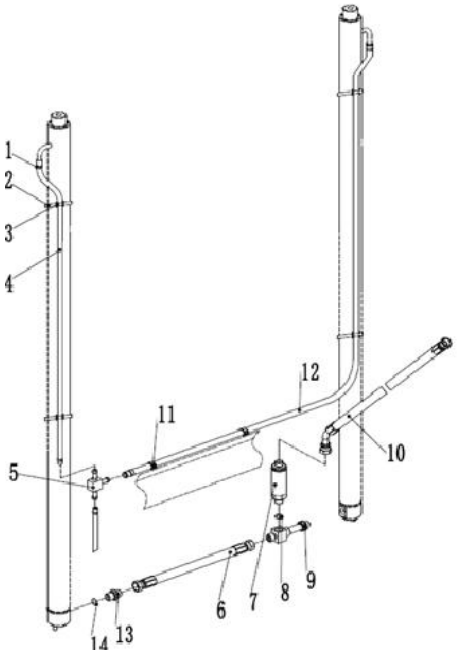

序号/NO	编码/SN	名称	Name	数量/QTY	备注/Remark
1	255044020043	卡箍	Hoop	1	
2	921600400001	扎带4x250	Strip 4x250	1	
3	255044020042	压板	Press plate	1	
4	▲	回油管1L=620	Oil return hose1L=620	2	H=2000
4	▲	回油管1L=870	Oil return hose1L=870	2	H=2500
4	▲	回油管1L=1120	Oil return hose1L=1120	2	H=3000
4	▲	回油管1L=1270	Oil return hose1L=1270	2	H=3300
4	▲	回油管1L=1370	Oil return hose1L=1370	2	H=3500
4	▲	回油管1L=1420	Oil return hose1L=1420	2	H=3600
4	▲	回油管1L=1470	Oil return hose1L=1470	2	H=3700
4	▲	回油管1L=1620	Oil return hose1L=1620	2	H=4000
4	▲	回油管1L=1770	Oil return hose1L=1770	2	H=4300
4	▲	回油管1L=1920	Oil return hose1L=1920	2	H=4500
4	▲	回油管1L=2120	Oil return hose1L=2120	2	H=5000
4	▲	回油管1L=2370	Oil return hose1L=2370	2	H=5500
4	▲	回油管1L=2620	Oil return hose1L=2620	2	H=6000
5	255044020118	接头(三通)	Joint	1	
6	255044020150	液压管总成(直)13-L360-2SC-60°	Hydraulic hose assembly 13-L360-2SC-60°	1	
7	950700300003	限速阀XSF-F16L-60	Speed limit valve XSF-F16L-60	1	
8	910800100040	O形圈-内24x2.4	Oring 17x2.65	1	
9	255044010040	接头(三通)	Joint	1	
10	255044020013	液压管总成(45°)13-L740-2SC-60°	Hydraulic hose assembly 13-L740-2SC-60°	1	
11	921600400003	扎带(带扣)P-N156-00646	Strip P-N156-00646	2	
12	▲	回油管2	Oil return hose2	1	
13	281298520001	防爆阀	explosion-proof valve	1	
14	910800100003	O形圈-内17x2.65	Oring 17x2.65	3	

293098501043单附加管路(标准门架)/SINGLE ADDITIONAL TUBE(stand mast)

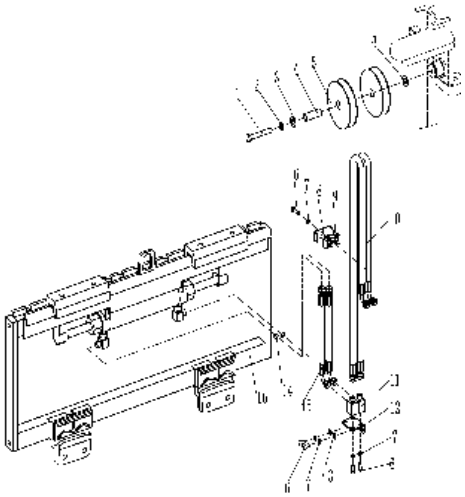

序号/NO	编码/SN	名称	Name	数量/QTY	备注/Remark
1	910100100056	螺栓GB5782-M12x90-8.8	Bolt GB5782-M12x90-8.8	1	
2	910400500008	弹簧垫圈GB93-12	WasherGB93-12	1	
3	910400100008	平垫圈GB97.1-12-200HV	Washer GB97.1-12-200HV	1	
4	255030520022	衬套Φ22xΦ13x56	Bush Φ22xΦ13x56	1	
5	255030520021	滑轮Φ110x27(单槽)	Pulley Φ110x27	2	
6	910200200059	螺钉GB70.1-M8x30-8.8	ScrewGB70.1-M8x30-8.8	2	
7	910400500006	弹簧垫圈GB93-8	Washer GB93-8	6	
8	255028520034	胶管固定块	Rubber pipe lump	2	
9	255028520035	管夹安装板	Pipe press fixedly piank	2	
10	256028020001	液压管总成(直)8-L4500-1SC-60°	Hydraulic hose assembly (90°)8-L4050-1SC-60°	2	H=3000
10	254131020010	液压管总成(直)8-L3400-1SC-60°	Hydraulic hose assembly(90°)8-L2950-1SC-60°	2	H=2000
10	256028020002	液压管总成(直)8-L3850-1SC-60°	Hydraulic hose assembly(90°)8-L3450-1SC-60°	2	H=2500
10	256028020003	液压管总成(直)8-L4700-1SC-60°	Hydraulic hose assembly(90°)8-L4250-1SC-60°	2	H=3300
10	256028020004	液压管总成(直)8-L4850-1SC-60°	Hydraulic hose assembly(90°)8-L4400-1SC-60°	2	H=3500
10	256028020005	液压管总成(直)8-L5050-1SC-60°	Hydraulic hose assembly(90°)8-L4500-1SC-60°	2	H=3600/3700
10	256028020006	液压管总成(直)8-L5500-1SC-60°	Hydraulic hose assembly(90°)8-L5050-1SC-60°	2	H=4000
10	256028020007	液压管总成(直)8-L5800-1SC-60°	Hydraulic hose assembly(90°)8-L5350-1SC-60°	2	H=4300
10	256028020008	液压管总成(直)8-L5950-1SC-60°	Hydraulic hose assembly(90°)8-L5550-1SC-60°	2	H=4500
10	256028020009	液压管总成(直)8-L6600-1SC-60°	Hydraulic hose assembly(90°)8-L6150-1SC-60°	2	H=5000
10	256028020010	液压管总成(直)8-L7100-1SC-60°	Hydraulic hose assembly(90°)8-L6650-1SC-60°	2	H=5500
10	256028020011	液压管总成(直)8-L7600-1SC-60°	Hydraulic hose assembly(90°)8-L7150-1SC-60°	2	H=6000
11	255029020024	接头(锁定弯)8-2xM16x1.5-60°	Joint 8-2XM16x1.5-60°	2	
12	254127520001	安装板	fixedly piank	1	
13	910400100006	平垫圈GB97.1-8-200HV	Washer GB97.1-8-200HV	2	
14	910800100001	O形圈-内9.5x1.8	Oring 9.5x1.8	4	
15	255042520101	液压管总成(90°)8-L500-1SC-60°-0°	Hydraulic hose assembly (90°)8-L500-1SC-90°	2	
16	256042510004	外置侧移器1100(LH)	Sideshifters(LH)	1	
16	253542510001	外置侧移器1100(LD)	Sideshifters(LD)	1	
16	256042510002	侧移器总成(卡斯卡特)	Sideshifters(CASCADE)	1	

293098501044双附加管路(标准门架)/DOUBLE ADDITIONAL TUBE(stand mast)

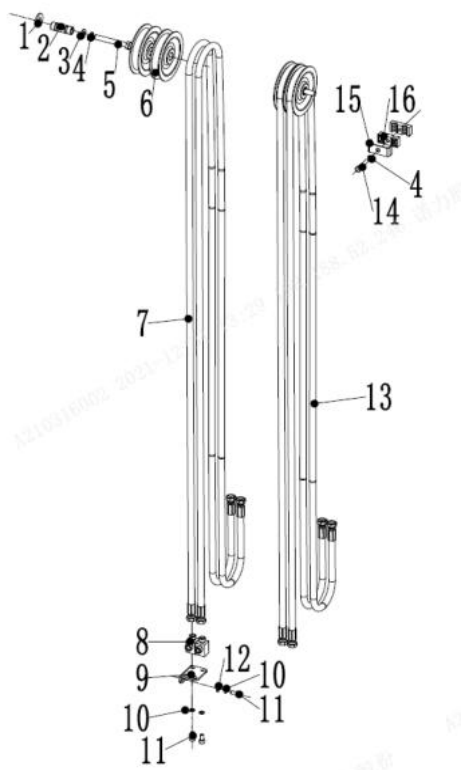

序号/NO	编码/SN	名称	Name	数量/QTY	备注/Remark
1	910400200005	大垫圈GB96.1-12-200HV	Big Washer GB96.1-12-200HV	4	
2	255030520022	衬套Φ22xΦ13x56	Bush Φ22xΦ13x56	2	
3	910400100008	平垫圈GB97.1-12-200HV	washer GB97.1-12-200HV	2	
4	910400500008	弹簧垫圈GB93-12	Spring washer GB93-12	12	
5	910100100056	螺栓GB5782-M12x90-8.8	Bolt GB5782-M12x90-8.8	2	
6	255030520021	滑轮Φ110x27(单槽	Pulley Φ110x27	4	
7	256028020001	液压管总成（直）8-L3400-1SC-60°	Hydraulic hose assembly 8-L3400-1SC-60°	2	H=2000
7	254131020010	液压管总成（直）8-L3850-1SC-60°	Hydraulic hose assembly 8-L3850-1SC-60°	2	H=2500
7	256028020002	液压管总成（直）8-L4500-1SC-60°	Hydraulic hose assembly 8-L4500-1SC-60°	2	H=3000
7	256028020003	液压管总成（直）8-L4700-1SC-60°	Hydraulic hose assembly 8-L4700-1SC-60°	2	H=3300
7	256028020004	液压管总成（直）8-L4850-1SC-60°	Hydraulic hose assembly 8-L4850-1SC-60°	2	H=3500
7	256028020005	液压管总成（直）8-L5050-1SC-60°	Hydraulic hose assembly8-L5050-1SC-60°	2	H=3700
7	256028020006	液压管总成（直）8-L5500-1SC-60°	Hydraulic hose assembly8-L5500-1SC-60°	2	H=4000
7	256028020007	液压管总成（直）8-L5800-1SC-60°	Hydraulic hose assembly 8-L5800-1SC-60°	2	H=4300
7	256028020008	液压管总成（直）8-L5950-1SC-60°	Hydraulic hose assembly 8-L5950-1SC-60°	2	H=4500
7	256028020009	液压管总成（直）8-L6600-1SC-60°	Hydraulic hose assembly 8-L6600-1SC-60°	2	H=5000
7	256028020010	液压管总成（直）8-L7100-1SC-60°	Hydraulic hose assembly 8-L7100-1SC-60°	2	H=5500
7	256028020011	液压管总成（直）8-L7600-1SC-60°	Hydraulic hose assembly 8-L7600-1SC-60°	2	H=6000
8	255029020024	接头(锁定弯)8-2xM16x1.5-60°	Joint 8-2XM16x1.5-60°	4	
9	254127520001	安装板	Plate	2	
10	910400500006	弹簧垫圈GB93-8	Spring washer GB93-8	12	
11	910200200055	螺钉GB70.1-M8x16-8.8	Screw GB70.1-M8x16-8.8	8	
12	910400100006	平垫圈GB97.1-8-200HV	Washer GB97.1-8-200HV	4	
13	255029020022	液压管总成（90°）8-L3050-1SC-60°	Hydraulic hose assembly （90°）8-L3050-1SC-60°	2	H=2000
13	254127520004	液压管总成（90°）8-L3500-1SC-60°	Hydraulic hose assembly （90°）8-L3500-1SC-60°	2	H=2500
13	263028520035	液压管总成（90°）8-L4150-1SC-60°	Hydraulic hose assembly （90°）8-L4150-1SC-60°	2	H=3000
13	253528520029	液压管总成（90°）8-L4350-1SC-60°	Hydraulic hose assembly （90°）8-L4350-1SC-60°	2	H=3300
13	255027520001	液压管总成（90°）8-L4500-1SC-60°	Hydraulic hose assembly （90°）8-L4500-1SC-60°	2	H=3500
13	253530520006	液压管总成（90°）8-L4700-1SC-60°	Hydraulic hose assembly （90°）8-L4700-1SC-60°	2	H=3700
13	253528520033	液压管总成（90°）8-L5150-1SC-60°	Hydraulic hose assembly （90°）8-L5150-1SC-60°	2	H=4000
13	256027520001	液压管总成（90°）8-L5450-1SC-60°	Hydraulic hose assembly （90°）8-L5450-1SC-60°	2	H=4300

293098501044双附加管路(标准门架)/DOUBLE ADDITIONAL TUBE(stand mast)

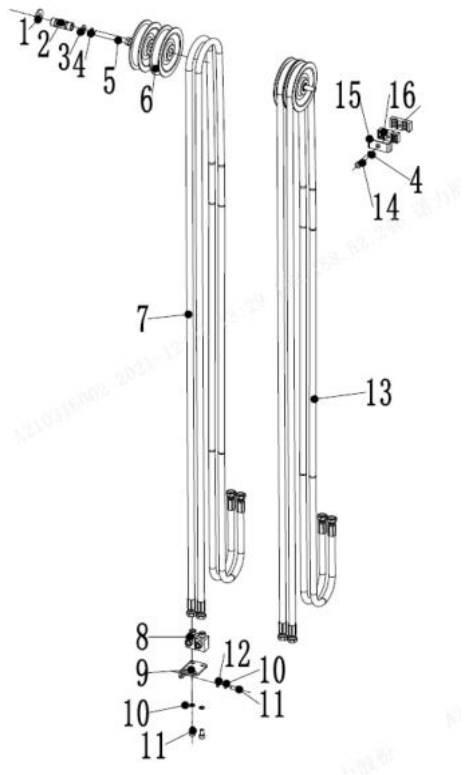

序号/NO	编码/SN	名称	Name	数量/QTY	备注/Remark
13	252027520025	液压管总成（90°）8-L5600-1SC-60°	Hydraulic hose assembly （90°）8-L5600-1SC-60°	2	H=4500
13	256027520002	液压管总成（90°）8-L6250-1SC-60°	Hydraulic hose assembly （90°）8-L6250-1SC-60°	2	H=5000
13	256027520003	液压管总成（90°）8-L6750-1SC-60°	Hydraulic hose assembly （90°）8-L6750-1SC-60°	2	H=5500
13	256027520004	液压管总成（90°）8-L7250-1SC-60°	Hydraulic hose assembly （90°）8-L7250-1SC-60°	2	H=6000
14	910200200059	螺钉GB70.1-M8x30-8.8	Bolt GB70.1-M8x30-8.8	2	
15	255028520035	安装板(管夹)	Pipe clamp munting plate	4	
16	255028520034	胶管固定块	hose immobilization lump	4	

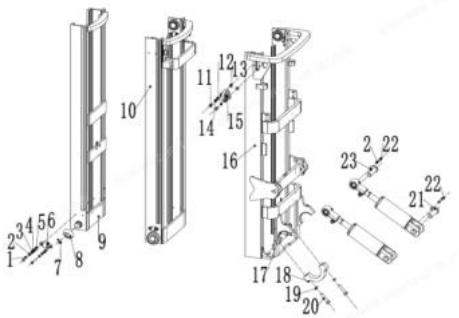

293098501045门架(三级全自由门架)/MAST (three stage full free)

序号/NO	编码/SN	名称	Name	数量/QTY	备注/Remark
1	910100300039	螺栓GB5783-M10x40-8.8	Bolt GB5783-M10x40-8.8	4	
2	910400500007	弹簧垫圈GB93-10	Washer GB93-10	8	
3	910400100007	平垫圈GB97.1-10-200HV	Washer GB97.1-10-200HV	4	
4	255038020009	调整垫	Adjustable pad	8	
5	255038020008	调整套	Adjusting sleeve	4	
6	940200200005	侧滚轮Φ42-CD=68	Side rollerΦ42 - CD = 68	2	
7	910401300024	轴用弹性挡圈	Elastic retaining ring for shaft	4	
8	940200300013	复合滚轮Φ111-range=53-58	RollerΦ111-range=53-58	4	
8	940200300029	复合滚轮Φ111.5-range=53-58	RollerΦ111.5-range=53-58	4	
9	256844512001	内门架焊合 3600	Inner mast 3600	1	
9	256844512002	内门架焊合 4000	Inner mast 4000	1	
9	256844512003	内门架焊合 4350	Inner mast 4350	1	
9	256844512004	内门架焊合 4500	Inner mast 4500	1	
9	256844512005	内门架焊合 4700	Inner mast 4700	1	
9	256844512006	内门架焊合 4800	Inner mast 4800	1	
9	256844512007	内门架焊合 5000	Inner mast 5000	1	
9	256844512008	内门架焊合 5400	Inner mast 5400	1	
9	256844512009	内门架焊合 5500	Inner mast 5500	1	
9	256844512010	内门架焊合 6000	Inner mast 6000	1	
9	256844512011	内门架焊合 6500	Inner mast 6500	1	
10	256844513001	中门架焊合 3600	Middle mast 3600	1	
10	256844513002	中门架焊合 4000	Middle mast 4000	1	
10	256844513003	中门架焊合 4350	Middle mast 4350	1	
10	256844513004	中门架焊合 4500	Middle mast 4500	1	
10	256844513005	中门架焊合 4700	Middle mast 4700	1	
10	256844513006	中门架焊合 4800	Middle mast 4800	1	
10	256844513007	中门架焊合 5000	Middle mast 5000	1	
10	256844513008	中门架焊合 5400	Middle mast 5400	1	
10	256844513009	中门架焊合 5500	Middle mast 5500	1	
10	256844513010	中门架焊合 6000	Middle mast 6000	1	
10	256844513011	中门架焊合 6500	Middle mast 6500	1	

293098501045门架(三级全自由门架)/MAST (three stage full free)

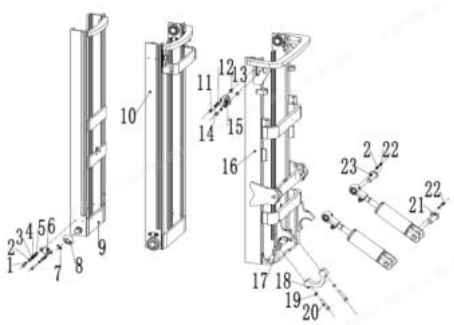

序号/NO	编码/SN	名称	Name	数量/QTY	备注/Remark
11	910100300050	螺栓GB5783-M12x30-8.8	Bolt GB5783-M12x30-8.8	8	
12	910400100008	平垫圈GB97.1-12-200HV	Washer GB97.1-12-200HV	8	
13	256544002001	垫圈Φ20xΦ13集合图	Washer Φ20xΦ13	8	
14	910400500008	弹簧垫圈GB93-12	Washer GB93-12	8	
15	940200200002	侧滚轮Φ87-CD=55	Side roller Φ87-CD=55	4	
16	293044511001	外门架焊合 3600	Outer mast 3600	1	3.0-3.5T
16	293044511002	外门架焊合 4000	Outer mast 4000	1	3.0-3.5T
16	293044511003	外门架焊合 4350	Outer mast 4350	1	3.0-3.5T
16	293044511004	外门架焊合 4500	Outer mast 4500	1	3.0-3.5T
16	293044511005	外门架焊合 4700	Outer mast 4700	1	3.0-3.5T
16	293044511006	外门架焊合 4800	Outer mast 4800	1	3.0-3.5T
16	293044511007	外门架焊合 5000	Outer mast 5000	1	3.0-3.5T
16	293044511008	外门架焊合 5400	Outer mast 5400	1	3.0-3.5T
16	293044511009	外门架焊合 5500	Outer mast 5500	1	3.0-3.5T
16	293044511010	外门架焊合 6000	Outer mast 6000	1	3.0-3.5T
16	293044511011	外门架焊合 6500	Outer mast 6500	1	3.0-3.5T
16	293144511001	外门架焊合 3600	Outer mast 3600	1	2.5T
16	293144511002	外门架焊合 4000	Outer mast 4000	1	2.5T
16	293144511003	外门架焊合 4350	Outer mast 4350	1	2.5T
16	293144511004	外门架焊合 4500	Outer mast 4500	1	2.5T
16	293144511005	外门架焊合 4700	Outer mast 4700	1	2.5T
16	293144511006	外门架焊合 4800	Outer mast 4800	1	2.5T
16	293144511007	外门架焊合 5000	Outer mast 5000	1	2.5T
16	293144511008	外门架焊合 5400	Outer mast 5400	1	2.5T
16	293144511009	外门架焊合 5500	Outer mast 5500	1	2.5T
16	293144511010	外门架焊合 6000	Outer mast 6000	1	2.5T
16	293144511011	外门架焊合 6500	Outer mast 6500	1	2.5T
17	254144020063	轴瓦	Bearing bush	2	
18	256844021014	支座盖	Bearing cover	2	
19	910400500010	弹簧垫圈GB93-16	Washer GB93-16	7	
20	910100200016	螺栓GB5785-M16x1.5x70-8.8	Bolt GB5785-M16x1.5x70-8.8	4	

293098501045门架(三级全自由门架)/MAST (three stage full free)

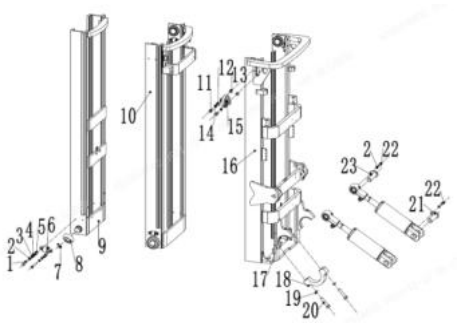

序号/NO	编码/SN	名称	Name	数量/QTY	备注/Remark
21	255044010057	带耳轴Φ30x82	Axle Φ30x82	4	
22	910100300035	螺栓GB5783-M10x20-8.8	Bolt GB5783-M10x20-8.8	4	
23	293044510001	带耳轴Φ30x110	Axle Φ30x110	2	

2930985001046货叉架(三级全自由门架)/FORK ARM CARRIER(three stage full free)						
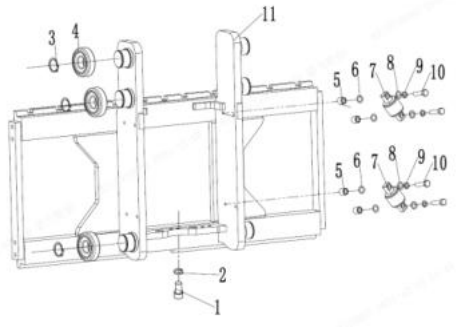	序号/NO	编码/SN	名称	Name	数量/QTY	备注/Remark
	1	910200200096	螺钉GB70.1-M12x20-8.8	Screw GB70.1-M12x20-8.8	1	
	2	910400500008	弹簧垫圈GB93-12	WasherGB93-12	1	
	3	910401300018	轴用弹性挡圈GB894.1-35	Circlip GB894.1-35	6	
	4	940200100043	主滚轮Φ78.80xΦ35x22.5(外圈斜1°)	Main roller Φ 78.80 x Φ 35 x22. 5	6	
	4	940200100044	主滚轮Φ79.1xΦ35x22.5(外圈斜1°)	Main roller Φ 79.1 x Φ 35 x22. 5	6	
	4	940200100039	主滚轮Φ79.1xΦ35x22.5(外圈斜1°)	Main roller Φ 79.4 x Φ 35 x22. 5	6	
	5	255038020008	调整套	Adjusting sleeve	4	
	6	255038020009	调整垫	Adjustable pad	8	
	7	940200200005	侧滚轮Φ42-CD=68	Side rollerΦ42 - CD = 68	2	
	8	910400100007	平垫圈GB97.1-10-200HV	Washer GB97.1-10-200HV	8	
	9	910400500007	弹簧垫圈GB93-10	Spring washer GB93-10	8	
	10	910100300039	螺栓GB5783-M10x40-8.8	Bolt GB5783 M10x40-8.8	4	
	11	256838013001	货叉架焊合(三级全自由)	Welding of fork rack	1	3.0-3.5T
	11	256738013001	货叉架焊合(三级全自由)	Welding of fork rack	1	2.5T

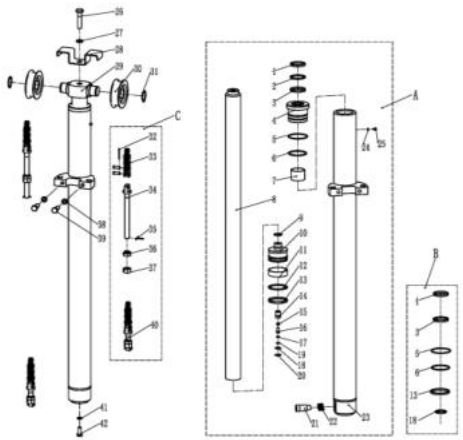

2930985001047短起升油缸(三级全自由门架)/SHORT LIFTING CYLINDER (three stage full free)					
序号/NO	编码/SN	名称	Name	数量/QTY	备注/Remark
A	256144518001	油缸(M)Φ85xΦ60x622 (H=3600)	Short lifting cylinderΦ85xΦ60x622 (H=3600)	1	3.0-3.5T
A	256144518002	油缸(M)Φ85xΦ60x685 (H=4000)	Short lifting cylinderΦ85xΦ60x685 (H=4000)	1	
A	256144518003	油缸(M)Φ85xΦ60x748 (H=4300)	Short lifting cylinderΦ85xΦ60x748 (H=4300)	1	
A	256144518004	油缸(M)Φ85xΦ60x772 (H=4500)	Short lifting cylinderΦ85xΦ60x772 (H=4500)	1	
A	256144518005	油缸(M)Φ85xΦ60x805 (H=4700)	Short lifting cylinderΦ85xΦ60x805 (H=4700)	1	
A	256144518006	油缸(M)Φ85xΦ60x822 (H=4800)	Short lifting cylinderΦ85xΦ60x822 (H=4800)	1	
A	256144518007	油缸(M)Φ85xΦ60x879 (H=5000)	Short lifting cylinderΦ85xΦ60x879 (H=5000)	1	
A	256144518008	油缸(M)Φ85xΦ60x979 (H=5400)	Short lifting cylinderΦ85xΦ60x979 (H=5400)	1	
A	256144518009	油缸(M)Φ85xΦ60x995 (H=5500)	Short lifting cylinderΦ85xΦ60x995 (H=5500)	1	
A	256144518010	油缸(M)Φ85xΦ60x1112 (H=6000)	Short lifting cylinderΦ85xΦ60x1112 (H=6000)	1	
A	256144518011	油缸(M)Φ85xΦ60x1229 (H=6500)	Short lifting cylinderΦ85xΦ60x1229 (H=6500)	1	
A	255044510100	油缸(M)Φ75xΦ50x622 (H=3600)	Short lifting cylinder Φ75xΦ50x622 (H=3600)	1	2.5T
A	255044510050	油缸(M)Φ75xΦ50x685 (H=4000)	Short lifting cylinder Φ75xΦ50x685 (H=4000)	1	
A	255044510051	油缸(M)Φ75xΦ50x748 (H=4300)	Short lifting cylinder Φ75xΦ50x748 (H=4300)	1	
A	255044510052	油缸(M)Φ75xΦ50x772 (H=4500)	Short lifting cylinder Φ75xΦ50x772 (H=4500)	1	
A	255044510101	油缸(M)Φ75xΦ50x805 (H=4700)	Short lifting cylinder Φ75xΦ50x805 (H=4700)	1	
A	255044510053	油缸(M)Φ75xΦ50x822 (H=4800)	Short lifting cylinder Φ75xΦ50x822 (H=4800)	1	
A	255044510054	油缸(M)Φ75xΦ50x879 (H=5000)	Short lifting cylinder Φ75xΦ50x879 (H=5000)	1	
A	255044510102	油缸(M)Φ75xΦ50x979 (H=5400)	Short lifting cylinder Φ75xΦ50x979 (H=5400)	1	
A	255044510055	油缸(M)Φ75xΦ50x995 (H=5500)	Short lifting cylinder Φ75xΦ50x995 (H=5500)	1	
A	255044510056	油缸(M)Φ75xΦ50x1112 (H=6000)	油缸(M)Φ75xΦ50x1112 (H=6000)	1	
A	255044510103	油缸(M)Φ75xΦ50x1229 (H=6500)	油缸(M)Φ75xΦ50x1229 (H=6500)	1	
B	255098510005	密封件修理包(三级全自由中间缸)	密封件修理包(三级全自由中间缸)	1	包含Inc.1.3.5.6.13.18
C	255044510124	起升链条LH1623-45	起升链条LH1623-45	2	H=3600
C	255044510044	起升链条LH1623-47	起升链条LH1623-47	2	H=4000
C	255044510045	起升链条LH1623-53	Lifting chain LH1623-53	2	H=4300
C	255044010060	起升链条LH1623-55	Lifting chain LH1623-55	2	H=4500
C	255044510133	起升链条LH1623-59	Lifting chain LH1623-59	2	H=4700/4800
C	255044510134	起升链条LH1623-63	Lifting chain LH1623-63	2	H=5000
C	255044510135	起升链条LH1623-61	Lifting chain LH1623-61	2	H=5400/5500
C	255044510136	起升链条LH1623-71	Lifting chain LH1623-71	2	H=6000

2930985001047短起升油缸(三级全自由门架)/SHORT LIFTING CYLINDER (three stage full free)

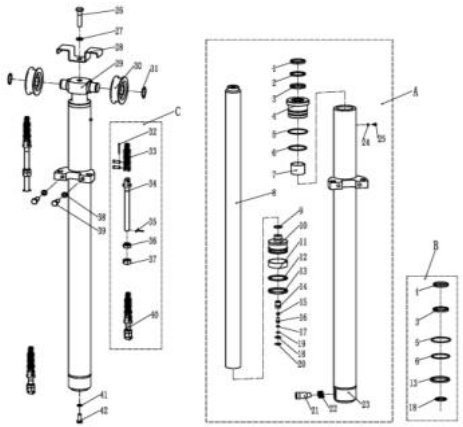

序号/NO	编码/SN	名称	Name	数量/QTY	备注/Remark
C	255044510137	起升链条LH1623-81	Lifting chain LH1623-81	2	H=6500
1	▲	防尘圈	Dust ring 50x58x6.5	1	
2	▲	挡片50×60×3	Catch 50×60×3	1	
3	▲	轴用密封圈	Seal ring 50×60×6	1	
4	▲	导向套	Glide sleeve	1	
5	▲	O型密封圈	O ring 74.4x3.1	1	
6	▲	O型密封圈	O ring 69×3.55	1	
7	▲	钢背轴承5040	Bearing5040	1	
8	▲	活塞杆	Piston rod	1	
9	▲	钢丝挡圈	Circlip	1	
10	▲	活塞总成	Piston assembly	1	
11	▲	支承环75x20x2.5	Support ring 75x20x2.5	1	
12	▲	支承环75x65x3	Support ring 75x65x3	1	
13	▲	孔用密封圈	Seal ring 75x65x6	1	
14	▲	阀套	Valve cover	1	
15	▲	弹簧	Spring	1	
16	▲	阀芯	Valve plug	1	
17	▲	挡片	Catch	1	
18	▲	O型密封圈	O ring D20x2.4	1	
19	▲	孔用弹性挡圈12	Circlip 12	1	
20	▲	孔用弹性挡圈22	Circlip 22	1	
21	▲	滑阀	Slide valve	1	
22	▲	弹簧2.3x15x48.5	Spring2.3x15x48.5	1	
23	▲	缸体	Cylinder	1	
24	▲	垫片	Spacer	1	
25	▲	内六角圆柱头螺钉M5x5	Screw M5x5	1	
26	910100100071	螺栓GB5782-M16x50-8.8	Bolt GB5782-M16x50-8.8	1	
27	910400500010	弹簧垫圈GB93-16	Washer GB93-16	1	
28	255043520020	挡链板	Block chain plate	1	
29	255043520006	缸头	Cylinder head	1	
30	940200500001	链轮轴承780708K-φ110xφ40x27	Chain wheel bearing 780708K-φ110xφ40x27	2	

2930985001047短起升油缸(三级全自由门架)/SHORT LIFTING CYLINDER (three stage full free)

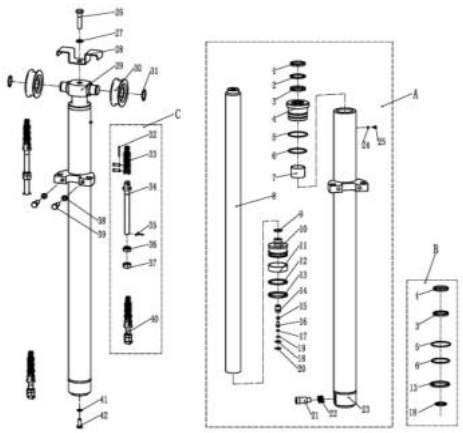

序号/NO	编码/SN	名称	Name	数量/QTY	备注/Remark
31	910401300020	轴用弹性挡圈GB894.1-40	Circlip GB894.1-40	2	
32	▲	开口销2.5x40	split pin2.5x40	2	
33	▲	LH1623板式链	LH1623 chain	2	
34	▲	长端接头	Joint	2	
35	▲	开口销3.2x30	Split pin 3.2x30	2	
36	▲	球面螺母M18x1.5	Nut M18x1.5	2	
37	▲	螺母M18x1.5	Nut M18x1.5	2	
38	910400500009	弹簧垫圈GB93-14	Washer GB93-14	2	
39	910100400022	螺栓GB5786-M14x1.5x40-8.8	Bolt GB5786-M14x1.5x40-8.8	2	
41	▲	短端接头	Joint	2	
42	910400500008	弹簧垫圈GB93-12	SpringWasherGB93-12	1	
43	910100400009	螺栓GB5786-M12x1.25x25-8.8	BoltGB5786-M12x1.25x25-8.8	1	

293098501048起升油缸(三级全自由门架)/LIFTING CYLINDER (three stage full free)

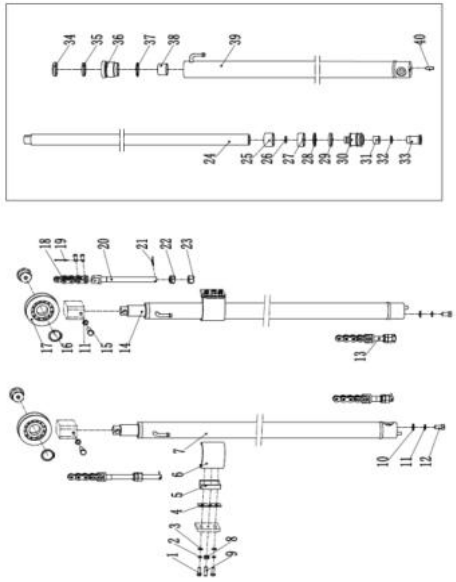

序号/NO	编码/SN	名称	Name	数量/QTY	备注/Remark
1	910100300023	螺栓GB5783-M8x25-8.8	Bolt GB5783-M8x25-8.8	4	
2	910400500007	弹簧垫圈GB93-10	Washer GB93-10	4	
3	910400100007	平垫圈GB97.1-10-200HV	Washer GB97.1-10-200HV	4	
4	255044520099	橡胶垫	Rubber pad	2	
5	255044520097	支撑块	Support block	2	
6	255044520098	弯板	Blendboard	2	
7	256144516001	油缸(L)(H=3600)	Cylinder (L)Φ56xΦ45x1174(H=3600)	1	3.0-3.5T
7	256144516002	油缸(L)(H=4000)	Cylinder (L)Φ56xΦ45x1312(H=4000)	1	
7	256144516003	油缸(L)(H=4300)	Cylinder (L)Φ56xΦ45x1424(H=4300)	1	
7	256144516004	油缸(L)(H=4500)	Cylinder (L)Φ56xΦ45x1474(H=4500)	1	
7	256144516005	油缸(L)(H=4700)	Cylinder (L)Φ56xΦ45x1539(H=4700)	1	
7	256144516006	油缸(L)(H=4800)	Cylinder (L)Φ56xΦ45x1574H=4800)	1	
7	256144516007	油缸(L)(H=5000)	Cylinder (L)Φ56xΦ45x1617(H=5000)	1	
7	256144516008	油缸(L)(H=5400)	Cylinder (L)Φ56xΦ45x1717(H=5400)	1	
7	256144516009	油缸(L)(H=5500)	Cylinder (L)Φ56xΦ45x1751(H=5500)	1	
7	256144516010	油缸(L)(H=6000)	Cylinder (L)Φ56xΦ45x1884(H=6000)	1	
7	256144516011	油缸(L)(H=6500)	Cylinder (L)Φ56xΦ45x2017(H=6000)	1	
7	255044510104	油缸(L)Φ50xΦ40x1174	Cylinder (L)Φ50xΦ40x1174(H=3600)	1	2.5T
7	255044510004	油缸(L)Φ50xΦ40x1312	Cylinder (L)Φ50xΦ40x1312(H=4000)	1	
7	255044510005	油缸(L)Φ50xΦ40x1424	Cylinder (L)Φ50xΦ40x1424(H=4300)	1	
7	255044510006	油缸(L)Φ50xΦ40x1474	Cylinder (L)Φ50xΦ40x1474(H=4500)	1	
7	255044510105	油缸(L)Φ50xΦ40x1539	Cylinder (L)Φ50xΦ40x1539(H=4700)	1	
7	255044510007	油缸(L)Φ50xΦ40x1574	Cylinder (L)Φ50xΦ40x1574H=4800)	1	
7	255044510008	油缸(L)Φ50xΦ40x1617	Cylinder (L)Φ50xΦ40x1617(H=5000)	1	
7	255044510106	油缸(L)Φ50xΦ40x1717	Cylinder (L)Φ50xΦ40x1717(H=5400)	1	
7	255044510105	油缸(L)Φ50xΦ40x1539	Cylinder (L)Φ50xΦ40x1539(H=4700)	1	2.5T
7	255044510007	油缸(L)Φ50xΦ40x1574	Cylinder (L)Φ50xΦ40x1574H=4800)	1	
7	255044510008	油缸(L)Φ50xΦ40x1617	Cylinder (L)Φ50xΦ40x1617(H=5000)	1	
7	255044510106	油缸(L)Φ50xΦ40x1717	Cylinder (L)Φ50xΦ40x1717(H=5400)	1	
7	255044510009	油缸(L)Φ50xΦ40x1751	Cylinder (L)Φ50xΦ40x1751(H=5500)	1	
7	255044510010	油缸(L)Φ50xΦ40x1884	Cylinder (L)Φ50xΦ40x1884(H=6000)	1	

293098501048起升油缸(三级全自由门架)/LIFTING CYLINDER (three stage full free)

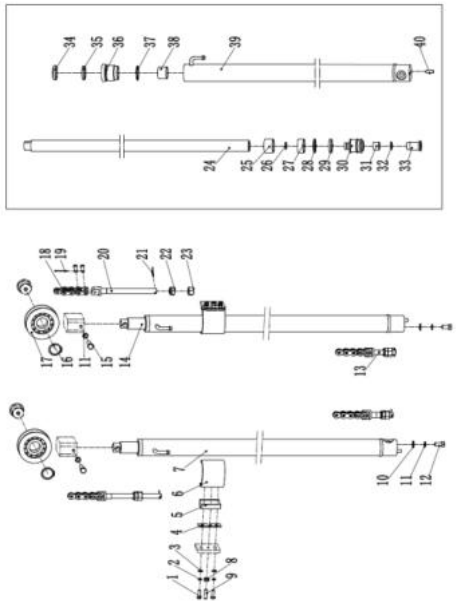

序号/NO	编码/SN	名称	Name	数量/QTY	备注/Remark
7	255044510107	油缸(L)Φ50xΦ40x2017	Cylinder (L)Φ50xΦ40x2017H=6500)	1	
8	910300100007	螺钉M10x35-8.8	Screw M10x35-8.8	2	
9	941100100003	螺母GB6170-M10-10	Nut GB6170-M10-10	2	
10	910400100008	平垫圈GB97.1-12-200HV	Washer GB97.1-12-200HV	2	
11	910400500008	弹簧垫圈GB93-12	Washer GB93-12	4	
12	910100400009	螺栓GB5786-M12x1.25x25-8.8	Bolt GB5786-M12x1.25x25-8.8	2	
13	▲	短端接头	Joint	2	
14	256144517001	油缸(R)(H=3600)	CyRinder (R)Φ56xΦ45x1174(H=3600)	1	3.0-3.5T
14	256144517002	油缸(R)(H=4000)	CyRinder (R)Φ56xΦ45x1312(H=4000)	1	
14	256144517003	油缸(R)(H=4300)	CyRinder (R)Φ56xΦ45x1424(H=4300)	1	
14	256144517004	油缸(R)(H=4500)	CyRinder (R)Φ56xΦ45x1474(H=4500)	1	
14	256144517005	油缸(R)(H=4700)	CyRinder (R)Φ56xΦ45x1539(H=4700)	1	
14	256144517006	油缸(R)(H=4800)	CyRinder (R)Φ56xΦ45x1574(H=4800)	1	
14	256144517007	油缸(R)(H=5000)	CyRinder (R)Φ56xΦ45x1617(H=5000)	1	
14	256144517008	油缸(R)(H=5400)	CyRinder (R)Φ56xΦ45x1717(H=5400)	1	
14	256144517009	油缸(R)(H=5500)	CyRinder (R)Φ56xΦ45x1751(H=5500)	1	
14	256144517010	油缸(R)(H=6000)	CyRinder (R)Φ56xΦ46x1884(H=6000)	1	
14	256144517011	油缸(R)(H=6500)	CyRinder (R)Φ56xΦ45x2017H=6000)	1	
14	255044510108	油缸(R)(H=3600)	CyRinder (R)Φ50xΦ40x1174(H=3600)	1	2.5T
14	255044510011	油缸(R)(H=4000)	CyRinder (R)Φ50xΦ40x1312(H=4000)	1	2.5T
14	255044510012	油缸(R)(H=4300)	CyRinder (R)Φ50xΦ40x1424(H=4300)	1	
14	255044510013	油缸(R)(H=4500)	CyRinder (R)Φ50xΦ40x1474(H=4500)	1	
14	255044510109	油缸(R)(H=4700)	CyRinder (R)Φ50xΦ40x1539H=4700)	1	
14	255044510014	油缸(R)(H=4800)	CyRinder (R)Φ50xΦ40x1574(H=4800)	1	
14	255044510015	油缸(R)(H=5000)	CyRinder (R)Φ50xΦ40x1617(H=5000)	1	
14	255044510110	油缸(R)(H=5400)	CyRinder (R)Φ50xΦ40x1717(H=5400)	1	
14	255044510016	油缸(R)(H=5500)	CyRinder (R)Φ50xΦ40x1751(H=5500)	1	
14	255044510017	油缸(R)(H=6000)	CyRinder (R)Φ50xΦ40x1884(H=6000)	1	
14	255044510111	油缸(R)(H=6500)	CyRinder (R)Φ50xΦ40x2017H=6000)	1	
15	910100300053	螺栓GB5783-M12x45-8.8	Bolt GB5783-M12x45-8.8	2	
16	910401300020	轴用弹性挡圈GB894.1-40	Circlip GB894.1-40	2	

293098501048起升油缸(三级全自由门架)/LIFTING CYLINDER (three stage full free)

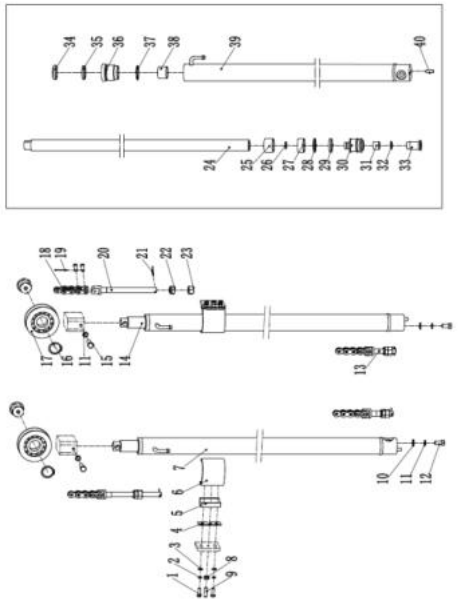

序号/NO	编码/SN	名称	Name	数量/QTY	备注/Remark
17	940200500005	链轮轴承780708K-φ110xφ40x27	Chain wheel bearing 780708K-φ110xφ40x27	2	
18	▲	LH1623板式链	LH1623chain	2	
19	▲	开口销2.5x40	Split pin 2.5x40	2	
20	▲	长端接头	Joint	2	
21	▲	开口销3.2x40	Split pin 3.2x40	2	
22	▲	球面螺母M20x1.5	Nut M20x1.5	2	
23	▲	螺母M20x1.5	Nut M20x1.5	2	
24	▲	活塞杆	Piston rod	1	
25	▲	调整套40.5x49xL2	Adjusting bushing 40.5x49xL2	1	
26	▲	钢丝挡圈φ24x2	Circlip φ24x2	1	
27	▲	支承56x20x2.5	Bearing 56x20x2.5	1	
28	▲	挡片56x44x3	Catch 56x45x3	1	
29	▲	孔用密封圈	Seal ring 56x45x6	1	
30	▲	活塞	Piston	1	
31	▲	铜套	Copper bushing	1	
32	▲	钢丝挡圈φ26.5x2	Circlip φ26.5x2	1	
33	▲	缓冲环	Buffer ring	1	
34	▲	防尘圈	Dust ring DKB45x58x7/10	1	
35	▲	轴用密封圈	Seal ring 40x50x6	1	
36	▲	导向套	Guide bushing	1	
37	▲	O型密封圈	O seal ring 49.7x2.4	1	
38	▲	钢背轴承4030	Bearing 4030	1	
39	▲	缸体	Cylinder	1	
40	▲	圆柱销D10x26	Dowel pin D10x26	1	
41	256198510003	30-35N密封件修理包(三级全自由起升缸)	Seal kits(three stage full free lifting cylinder)	2	包含/Inc 27,29,34,35,37
A	255044510134	起升链条LH1623-63	Lifting chainLH1623-63	2	H=3600
A	255044510046	起升链条LH1623-69	Lifting chainLH1623-69	2	H=4000
A	255044510138	起升链条LH1623-73	Lifting chainLH1623-73	2	H=4350
A	255044510047	起升链条LH1623-75	Lifting chainLH1623-75	2	H=4500
A	255043510139	起升链条LH1623-79	Lifting chainLH1623-79	2	H=4700/4800
A	255044510140	起升链条LH1623-85	Lifting chainLH1623-85	2	H=5000

293098501048起升油缸(三级全自由门架)/LIFTING CYLINDER (three stage full free)

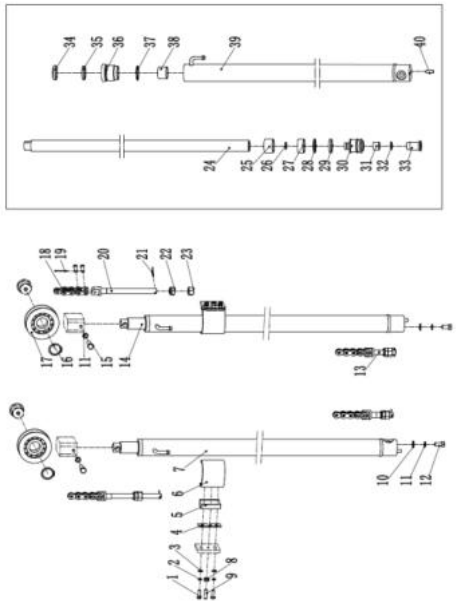

序号/NO	编码/SN	名称	Name	数量/QTY	备注/Remark
A	255044510048	起升链条LH1623-95	Lifting chainLH1623-95	2	H=5400/5500
A	255044510049	起升链条LH1623-103	Lifting chainLH1623-103	2	H=6000
A	255044510125	起升链条LH1623-113	Lifting chainLH1623-113	2	H=6500

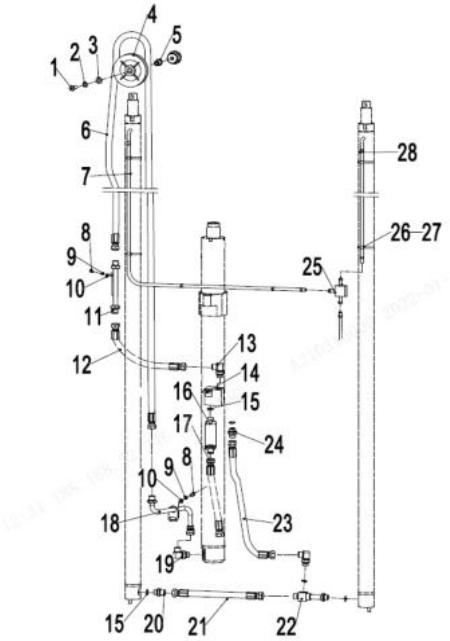

2930985001049起升管路(三级全自由门架)/LIFTING CYLINDER (three stage full free)

序号/NO	编码/SN	名称	Name	数量/QTY	备注/Remark
1	910100100048	螺栓GB5782-M12x50-8.8	Bolt GB5782-M12x50-8.8	1	
2	910400500008	弹簧垫圈GB93-12	Spring washer gb93-12	1	
3	910400100008	平垫圈GB97.1-12-200HV	Flat washer GB97.1-12-200HV	1	
4	255044520096	滑轮Φ120x36(单槽)	Pulley Φ120x36 (single slot)	1	
5	255044520081	衬套(带肩)Φ20xΦ13x28	Bushings (shoulder)Φ20xΦ13x28	1	
6	255044520084	液压管总成(直)15-L1910-2SC-60	Hydraulic hose assembly 15-L1910-2SC-60	1	H=3600
6	255044520071	液压管总成（直）15-L2180-2SC-60°	Hydraulic hose assembly 15-L2180-2SC-60°	1	H=4000
6	255044520072	液压管总成（直）15-L2430-2SC-60°	Hydraulic hose assembly 15-L2430-2SC-60°	1	H=4350
6	255044520073	液压管总成（直）15-L2530-2SC-60°	Hydraulic hose assembly 15-L2530-2SC-60°	1	H=4500
6	255044520074	液压管总成（直）15-L2730-2SC-60°	Hydraulic hose assembly 15-L2730-2SC-60°	1	H=4700/4800
6	255044520075	液压管总成（直）15-L3015-2SC-60°	Hydraulic hose assembly 15-L3015-2SC-60°	1	H=5000
6	255044520076	液压管总成（直）15-L3480-2SC-60°	Hydraulic hose assembly 15-L3480-2SC-60°	1	H=5400/5500
6	255044520077	液压管总成（直）15-L3950-2SC-60°	Hydraulic hose assembly 15-L3950-2SC-60°	1	H=6000
6	255044520124	液压管总成（直）15-L4410-2SC-60°	Hydraulic hose assembly 15-L4410-2SC-60°	1	H=6500
7	▲	PE软管Φ10xΦ13	PE Supple pipeΦ10xΦ13	3	
8	910100300022	螺栓GB5783-M8x20-8.8	Bolt GB5783-M8x20-8.8	3	
9	910400500006	弹簧垫圈GB93-8	Spring washer GB93-8	5	
10	910400100006	平垫圈GB97.1-8-200HV	Flat washer GB97.1-8-200HV	5	
11	255044510020	液压钢管焊合1	Hydraulic pipe welding 1	1	
12	255044520083	液压管总成(直)15-L530-2SC-60°	Hydraulic hose assembly 15-L530-2SC-60°	1	
13	255044020151	接头(锁定弯)12-2xM22x1.5-60°	Connector (lock bend) 12-2xM22x1.5-60°	1	
14	252144519002	三通焊合(20Q)	Tee welded (20Q)	1	
15	▲	O形圈-内19x2.65	O - inner 19x2.65	4	
16	950700300002	限速阀XSF-F16L-48	The speed limit valve XSF-F16L-48	1	
17	252144529003	液压管总成(直)15-L800-2SC-60°	Hydraulic hose assembly 15-L800-2SC-60°	1	
18	255044510021	液压钢管焊合2	Hydraulic pipe welding 2	1	
19	255043520022	接头（锁定弯）12-M27x2-M22x1.5	Connector (lock bend) 12-M27x2-M22x1.5	1	
20	281298520001	防爆阀	explosion-proof valve	1	
21	255044020150	液压管总成(直)15-L360-2SC-60°	Hydraulic hose assembly 15-L360-2SC-60°	1	
22	255044010040	接头(三通)	Connector (tee)	1	
23	255044520070	液压管总成(直)15-L620-2SC-60°	Hydraulic hose assembly 15-L620-2SC-60°	1	

2930985001049起升管路(三级全自由门架)/LIFTING CYLINDER (three stage full free)

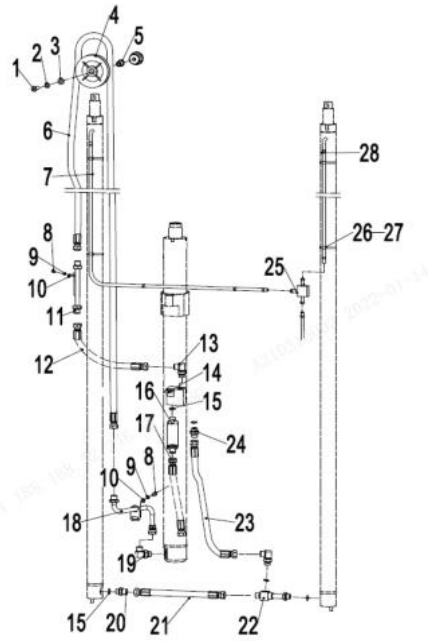

序号/NO	编码/SN	名称	Name	数量/QTY	备注/Remark
24	255023520030	接头(直)12-2xM22x1.5-60°	Connector12-2xM22x1.5-60°	1	
25	255044020118	接头(三通)	Connector (tee)	1	
26	921600400001	扎带4x250	4 x250 tie	6	
27	255044020042	压板	clamp	4	
28	255044020043	卡箍13	Clamp 13	6	

293098501050侧移器及管路安装(三级全自由)/SIDE SHIFTER AND PIPELINE INSTALLATION(three stage full free)

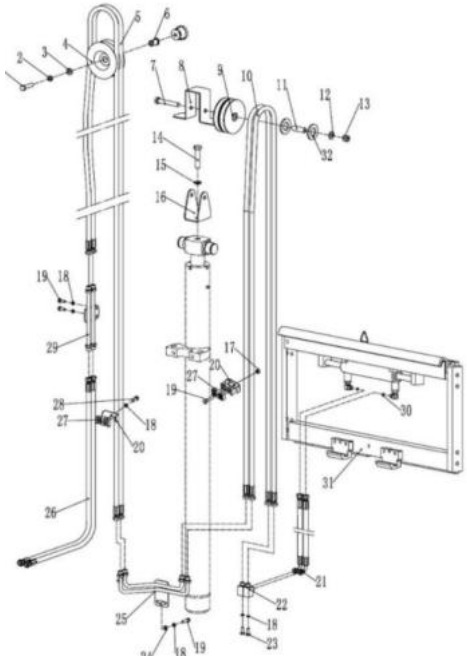

序号/NO	编码/SN	名称	Name	数量/QTY	备注/Remark
1	910100100048	螺栓GB5782-M12x50-8.8	BoltGB5782-M12x50-8.8	1	
2	910400500008	弹簧垫圈GB93-12	Washer GB93-12	1	
3	910400100008	平垫圈GB97.1-12-200HV	Washer GB97.1-12-200HV	2	
4	255030520020	滑轮Φ120x42(双槽)	Pulley Φ120 x42 (dual slot)	1	
5	255023520036	液压管总成（直）8-L1800-1CS-60°	Hydraulic hose assembly 8-L1800-1CS-60°	1	H=3600
5	255030520001	液压管总成（直）8-L2060-1CS-60°	Hydraulic hose assembly 8-L2060-1CS-60°	1	H=4000
5	255030520002	液压管总成（直）8-L2310-1CS-60°	Hydraulic hose assembly 8-L2310-1CS-60°	1	H=4300
5	255030520003	液压管总成（直）8-L2410-1CS-60°	Hydraulic hose assembly 8-L2410-1CS-60°	1	H=4500
5	255030520004	液压管总成（直）8-L2610-1CS-60°	Hydraulic hose assembly 8-L2610-1CS-60°	1	H=4800/4700
5	255030520005	液压管总成（直）8-L2900-1CS-60°	Hydraulic hose assembly 8-L2900-1CS-60°	1	H=5000
5	255030520006	液压管总成（直）8-L3370-1CS-60°	Hydraulic hose assembly 8-L3370-1CS-60°	1	H=5500/5400
5	255030520007	液压管总成（直）8-L3840-1CS-60°	Hydraulic hose assembly 8-L3840-1CS-60°	1	H=6000
5	263030520008	液压管总成（直）8-L4330-1CS-60°	Hydraulic hose assembly 8-L4330-1CS-60°	1	H=6500
6	255030520023	衬套1	Bushing	1	
7	910100100058	螺栓GB5782-M12x100-8.8	Bolt GB5782-M12x100-8.8	1	
8	255028520043	挡板	Chain plate	1	
9	255030520021	滑轮φ110x27(单槽)	Pulley φ110x27	2	
10	255029020015	液压管总成（直）8-L1800-1CS-60°	Hydraulic hose assembly8-L1800-1CS-60°	2	H=3600
10	255028520049	液压管总成（直）8-L1930-1CS-60°	Hydraulic hose assembly8-L1930-1CS-60°	2	H=4000
10	275323521007	液压管总成（直）8-L2040-1CS-60°	Hydraulic hose assembly8-L2040-1CS-60°	2	H=4350
10	255030520711	液压管总成（直）8-L2090-1CS-60°	Hydraulic hose assembly8-L2090-1CS-60°	2	H=4500
10	263030520015	液压管总成（直）8-L2160-1CS-60°	Hydraulic hose assembly8-L2160-1CS-60°	2	H=4800/4700
10	263030520011	液压管总成（直）8-L2300-1CS-60°	Hydraulic hose assembly8-L2300-1CS-60°	2	H=5000
10	255028520045	液压管总成（直）8-L2500-1CS-60°	Hydraulic hose assembly8-L2500-1CS-60°	2	H=5500/5400
10	255031020100	液压管总成（直）8-L2750-1CS-60°	Hydraulic hose assembly8-L2750-1CS-60°	2	H=6000
10	255028520050	液压管总成（直）8-L2975-1CS-60°	Hydraulic hose assembly8-L2975-1CS-60°	2	H=6500
11	255030520022	衬套Φ22xΦ13x56	Bush Φ22xΦ13x56	1	
12	910400100008	平垫圈GB97.1-12-200HV	Washer GB97.1-12-200HV	2	
13	910300500006	螺母GB889.1-M12-10	Nut GB889.1-M12-10	1	
14	910100100072	螺栓GB5782-M16x60-8.8	Bolt GB5782-M16x60-8.8	1	
15	910400100010	平垫圈GB97.1-16-200HV	Washer GB97.1-16-200HV	1	

293098501050侧移器及管路安装(三级全自由)/SIDE SHIFTER AND PIPELINE INSTALLATION(three stage full free)

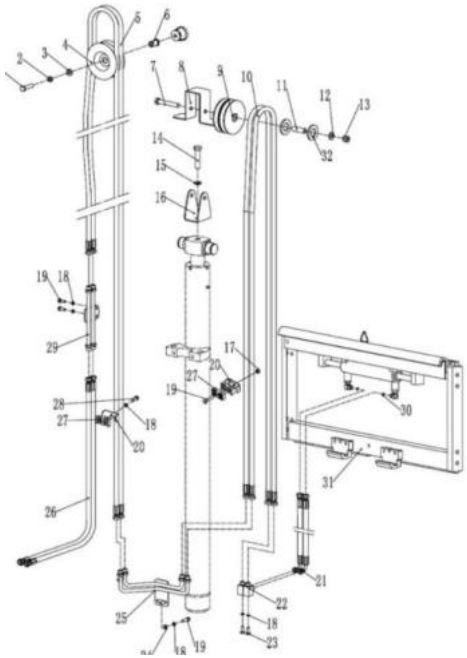

序号/NO	编码/SN	名称	Name	数量/QTY	备注/Remark
16	255030520026	滑轮架体	Pulley frame	1	

293098501050侧移器及管路安装(三级全自由)/SIDE SHIFTER AND PIPELINE INSTALLATION(three stage full free)

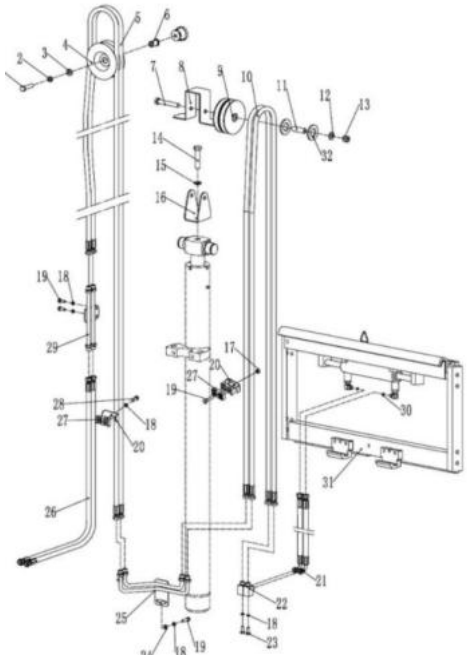

序号/NO	编码/SN	名称	Name	数量/QTY	备注/Remark
1	910100100048	螺栓GB5782-M12x50-8.8	BoltGB5782-M12x50-8.8	1	
2	910400500008	弹簧垫圈GB93-12	Washer GB93-12	1	
3	910400100008	平垫圈GB97.1-12-200HV	Washer GB97.1-12-200HV	2	
4	255030520020	滑轮Φ120x42(双槽)	Pulley Φ120 x42 (dual slot)	1	
5	255023520036	液压管总成（直）8-L1800-1CS-60°	Hydraulic hose assembly 8-L1800-1CS-60°	1	H=3600
5	255030520001	液压管总成（直）8-L2060-1CS-60°	Hydraulic hose assembly 8-L2060-1CS-60°	1	H=4000
5	255030520002	液压管总成（直）8-L2310-1CS-60°	Hydraulic hose assembly 8-L2310-1CS-60°	1	H=4300
5	255030520003	液压管总成（直）8-L2410-1CS-60°	Hydraulic hose assembly 8-L2410-1CS-60°	1	H=4500
5	255030520004	液压管总成（直）8-L2610-1CS-60°	Hydraulic hose assembly 8-L2610-1CS-60°	1	H=4800/4700
5	255030520005	液压管总成（直）8-L2900-1CS-60°	Hydraulic hose assembly 8-L2900-1CS-60°	1	H=5000
5	255030520006	液压管总成（直）8-L3370-1CS-60°	Hydraulic hose assembly 8-L3370-1CS-60°	1	H=5500/5400
5	255030520007	液压管总成（直）8-L3840-1CS-60°	Hydraulic hose assembly 8-L3840-1CS-60°	1	H=6000
5	263030520008	液压管总成（直）8-L4330-1CS-60°	Hydraulic hose assembly 8-L4330-1CS-60°	1	H=6500
6	255030520023	衬套1	Bushing	1	
7	910100100058	螺栓GB5782-M12x100-8.8	Bolt GB5782-M12x100-8.8	1	
8	255028520043	挡板	Chain plate	1	
9	255030520021	滑轮φ110x27(单槽)	Pulley φ110x27	2	
10	255029020015	液压管总成（直）8-L1800-1CS-60°	Hydraulic hose assembly8-L1800-1CS-60°	2	H=3600
10	255028520049	液压管总成（直）8-L1930-1CS-60°	Hydraulic hose assembly8-L1930-1CS-60°	2	H=4000
10	275323521007	液压管总成（直）8-L2040-1CS-60°	Hydraulic hose assembly8-L2040-1CS-60°	2	H=4350
10	255030520711	液压管总成（直）8-L2090-1CS-60°	Hydraulic hose assembly8-L2090-1CS-60°	2	H=4500
10	263030520015	液压管总成（直）8-L2160-1CS-60°	Hydraulic hose assembly8-L2160-1CS-60°	2	H=4800/4700
10	255028520049	液压管总成（直）8-L1930-1CS-60°	Hydraulic hose assembly8-L1930-1CS-60°	2	H=4000
10	275323521007	液压管总成（直）8-L2040-1CS-60°	Hydraulic hose assembly8-L2040-1CS-60°	2	H=4350
10	255030520711	液压管总成（直）8-L2090-1CS-60°	Hydraulic hose assembly8-L2090-1CS-60°	2	H=4500
10	263030520015	液压管总成（直）8-L2160-1CS-60°	Hydraulic hose assembly8-L2160-1CS-60°	2	H=4800/4700
10	263030520011	液压管总成（直）8-L2300-1CS-60°	Hydraulic hose assembly8-L2300-1CS-60°	2	H=5000
10	255028520045	液压管总成（直）8-L2500-1CS-60°	Hydraulic hose assembly8-L2500-1CS-60°	2	H=5500/5400
10	255031020100	液压管总成（直）8-L2750-1CS-60°	Hydraulic hose assembly8-L2750-1CS-60°	2	H=6000
10	255028520050	液压管总成（直）8-L2975-1CS-60°	Hydraulic hose assembly8-L2975-1CS-60°	2	H=6500
11	255030520022	衬套Φ22xΦ13x56	Bush Φ22xΦ13x56	1	

293098501050侧移器及管路安装(三级全自由)/SIDE SHIFTER AND PIPELINE INSTALLATION(three stage full free)

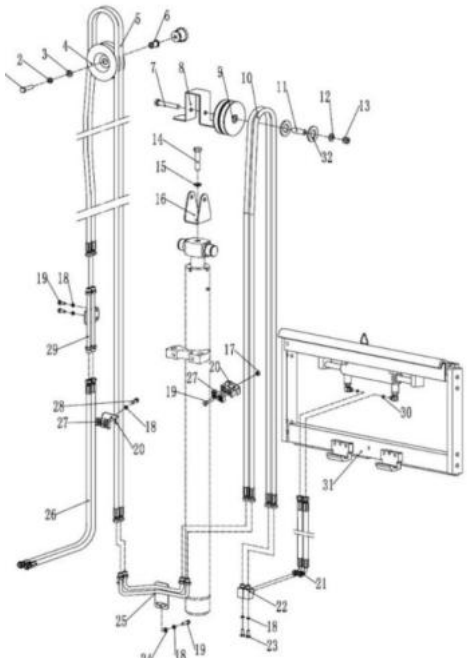

序号/NO	编码/SN	名称	Name	数量/QTY	备注/Remark
12	910400100008	平垫圈GB97.1-12-200HV	Washer GB97.1-12-200HV	2	
13	910300500006	螺母GB889.1-M12-10	Nut GB889.1-M12-10	1	
14	910100100072	螺栓GB5782-M16x60-8.8	Bolt GB5782-M16x60-8.8	1	
15	910400100010	平垫圈GB97.1-16-200HV	Washer GB97.1-16-200HV	1	
16	255030520026	滑轮架体	Pulley frame	1	
17	910300500004	螺母GB889.1-M8-10	Nut GB889.1-M8-10	1	
18	910400100006	弹簧垫圈GB93-8	Washer GB93-8	5	
19	910200200061	螺钉GB70.1-M8x40-8.8	Bolt GB5783-M8x20-8.8	1	
20	255028520035	管夹安装板	Pipe press fixedly piank	2	
22	255029020024	接头(锁定弯)8-2xM16x1.5-60°	Joint 8-2XM16x1.5-60°	2	
23	910100300025	螺栓GB5783-M8x35-8.8	Bolt GB5783-M8x35-8.8	2	
24	910400500006	平垫圈GB97.1-8-200HV	Washer GB97.1-8-200HV	5	
25	255030520019	液压钢管焊合2	Hydraulic steel pipe welding 2	1	
26	255030520017	液压管总成（直）8-L1450-1CS-60°	Hydraulic hose assembly8-L1450-1CS-60°	2	
27	255028520034	胶管固定块	Hose fixing bloke	4	
28	910200200060	螺钉GB70.1-M8x35-8.8	Screw GB70.1-M8x35-8.8	1	
29	255030520018	液压钢管焊合	Hydraulic steel pipe welding	1	
30	910800100001	O形圈-内9.5x1.8	Oring 9.5x1.8	4	
31	255042510004	侧移器总成(LH)	Side shiifter assembly(LH)	1	选装/optional
31	255042510001	侧移器总成(LD)	Side shiifter assembly(LD)	1	选装/optional
31	255042510002	侧移器总成(卡斯卡特)	Side shiifter assembly(CASCADE)	1	选装/optional
32	910400200005	大垫圈GB96.1-12-200HV	Washer GB96.1-12-200HV	2	

293098501051双附加管路(三级全自由)/DOUBLE ADDITIONAL TUBE(three stage full free)

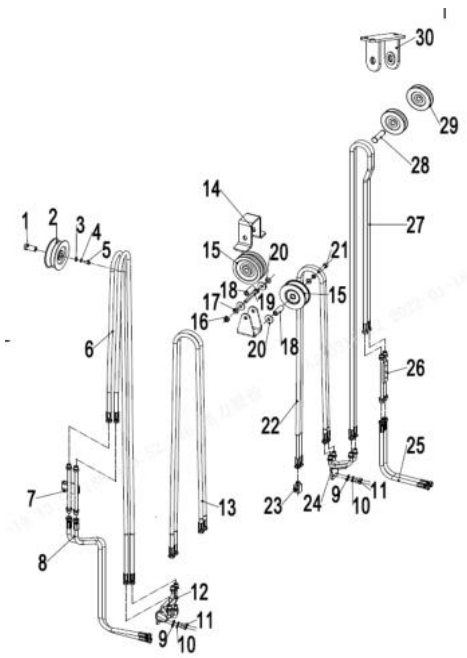

序号/NO	编码/SN	名称	Name	数量/QTY	备注/Remark
1	254130520016	衬套Φ20xΦ13x43	Bush Φ20xΦ13x43	1	
2	255030520020	滑轮Φ120x42(双槽)	Pulley Φ120x42	1	
3	910400500008	弹簧垫圈GB93-12	WasherGB93-12	1	
4	910400100008	平垫圈GB97.1-12-200HV	Washer GB97.1-12-200HV	1	
5	910100100048	螺栓GB5782-M12x50-8.8	Bolt GB5782-M12x50-8.8	1	
6	255023520036	液压管总成(直)10-L1800-1SC-60°	Hydraulic hose assembly 10-L1800-1SC-60°	2	H=3600
6	255030520001	液压管总成(直)10-L2060-1SC-60°	Hydraulic hose assembly 10-L2060-1SC-60°	2	H=4000
6	255030520002	液压管总成(直)10-L2310-1SC-60°	Hydraulic hose assembly 10-L2310-1SC-60°	2	H=4350
6	255030520003	液压管总成(直)10-L2410-1SC-60°	Hydraulic hose assembly 10-L2410-1SC-60°	2	H=4500
6	255030520004	液压管总成(直)10-L2610-1SC-60°	Hydraulic hose assembly 10-L2610-1SC-60°	2	H=4800/4700
6	255030520005	液压管总成(直)10-L2900-1SC-60°	Hydraulic hose assembly 10-L2900-1SC-60°	2	H=5000
6	255030520006	液压管总成(直)10-L3370-1SC-60°	Hydraulic hose assembly 10-L3370-1SC-60°	2	H=5500/5400
6	255030520007	液压管总成(直)10-L3840-1SC-60°	Hydraulic hose assembly 10-L3840-1SC-60°	2	H=6000
6	263030520008	液压管总成(直)10-L4330-1SC-60°	Hydraulic hose assembly 10-L4330-1SC-60°	2	H=6500
7	255030520018	液压钢管焊合1	Hydraulic steel pipe welding 1	1	
8	255030520017	液压管总成(直)10-L1450-1SC-60°	Hydraulic hose assembly 10-L1450-1SC-60°	2	
9	910400100006	平垫圈GB97.1-8-200HV	Washer GB97.1-8-200HV	5	
10	910400500006	弹簧垫圈GB93-8	WasherGB93-8	8	
11	910100300022	螺栓GB5783-M8x20-8.8	Bolt GB5783-M8x20-8.8	7	
12	255030520019	液压钢管焊合2	Hydraulic steel pipe welding 2	1	
13	255023520036	液压管总成(直)10-L1800-1SC-60°	Hydraulic hose assembly 10-L1800-1SC-60°	2	H=3600
13	255028520016	液压管总成(直)10-L1930-1SC-60°	Hydraulic hose assembly 10-L1930-1SC-60°	2	H=4000
13	275323521007	液压管总成(直)10-L2040-1SC-60°	Hydraulic hose assembly 10-L2040-1SC-60°	2	H=4350
13	255030520711	液压管总成(直)10-L2090-1SC-60°	Hydraulic hose assembly 10-L2090-1SC-60°	2	H=4500
13	263030520015	液压管总成(直)10-L2160-1SC-60°	Hydraulic hose assembly 10-L2160-1SC-60°	2	H=4800/4700
13	255028520045	液压管总成(直)10-L2300-1SC-60°	Hydraulic hose assembly 10-L2300-1SC-60°	2	H=5000
13	281229020031	液压管总成(直)10-L2500-1SC-60°	Hydraulic hose assembly 10-L2500-1SC-60°	2	H=5500/5400
13	254131020006	液压管总成(直)10-L2750-1SC-60°	Hydraulic hose assembly 10-L2750-1SC-60°	2	H=6000
13	281229020023	液压管总成(直)10-L2975-1SC-60°	Hydraulic hose assembly 10-L2975-1SC-60°	2	H=6500
14	255028520043	挡板	Chain plate	1	
15	255030520021	滑轮Φ110x27(单槽)	Pulley Φ110x27	4	

293098501051双附加管路(三级全自由)/DOUBLE ADDITIONAL TUBE(three stage full free)

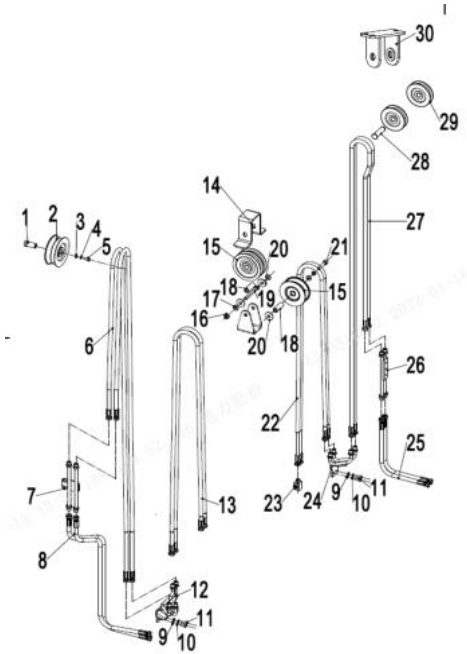

序号/NO	编码/SN	名称	Name	数量/QTY	备注/Remark
16	910300500006	螺母GB889.1-M12-10	Nut GB889.1-M12-10	1	
17	910400100008	平垫圈GB97.1-12-200HV	Washer GB97.1-12-200HV	1	
18	255030520022	衬套Φ20xΦ13x56	BushΦ20xΦ13x56	1	
19	910100100058	螺栓GB5782-M12x100-8.8	Bolt GB5782-M12x100-8.8	1	
20	910400200005	大垫圈GB96.1-12-200HV	Washer GB96.1-12-200HV	2	
21	910100100056	螺栓GB5782-M12x90-8.8	Bolt GB5782-M12x90-8.8	1	
22	255029020015	液压管总成(直)10-L1560-1SC-60°	Hydraulic hose assembly 10-L1560-1SC-60°	2	H=3600
22	255028520049	液压管总成(直)10-L1680-1SC-60°	Hydraulic hose assembly 10-L1680-1SC-60°	2	H=4000
22	255030520027	液压管总成(直)10-L1850-1SC-60°	Hydraulic hose assembly 10-L1850-1SC-60°	2	H=4350/4500
22	255028520048	液压管总成(直)10-L1950-1SC-60°	Hydraulic hose assembly 10-L1950-1SC-60°	2	H=4800/4700
22	255030520001	液压管总成(直)10-L2060-1SC-60°	Hydraulic hose assembly 10-L2060-1SC-60°	2	H=5000
22	255028520045	液压管总成(直)10-L2300-1SC-60°	Hydraulic hose assembly 10-L2300-1SC-60°	2	H=5400/5500
22	255031020100	液压管总成(直)10-L2530-1SC-60°	Hydraulic hose assembly 10-L2530-1SC-60°	2	J=6000
22	255028520050	液压管总成(直)10-L2730-1SC-60°	Hydraulic hose assembly 10-L2730-1SC-60°	2	H=6500
23	255029020024	接头(锁定弯)8-2xM16x1.5-60°	Joint 8-2XM16x1.5-60°	4	
24	255031020006	液压钢管焊合	Hydraulic steel pipe welding	1	
25	255031020008	液压管总成(135°)10-L1000-1SC-60°	Hydraulic hose assembly (135°)10-L1000-1SC-60°	2	
26	255028510022	过渡钢管	Excessive pipe welding	1	
27	255030520001	液压管总成(直)10-L2060-1SC-60°	Hydraulic hose assembly 10-L2060-1SC-60°	2	H=3600
27	255031020009	液压管总成(直)10-L2340-1SC-60°	Hydraulic hose assembly 10-L2340-1SC-60°	2	H=4000
27	255031020010	液压管总成(直)10-L2590-1SC-60°	Hydraulic hose assembly 10-L2590-1SC-60°	2	H=4350
27	263028520009	液压管总成(直)10-L2690-1SC-60°	Hydraulic hose assembly 10-L2690-1SC-60°	2	H=4500
27	255031020012	液压管总成(直)10-L2890-1SC-60°	Hydraulic hose assembly 10-L2890-1SC-60°	2	H=4700/4800
27	255031020013	液压管总成(直)10-L3180-1SC-60°	Hydraulic hose assembly 10-L3180-1SC-60°	2	H=5000/5400/5500
27	255031020014	液压管总成(直)10-L3630-1SC-60°	Hydraulic hose assembly 10-L3630-1SC-60°	2	H=6000
27	281227511003	液压管总成(直)10-L4300-1SC-60°	Hydraulic hose assembly 10-L4300-1SC-60°	2	H=6500
28	255031020004	带耳轴Φ20x70	Axle Φ20x70	1	
29	255031020007	滑轮Φ90x22(单槽)	Pulley Φ90x22	2	
30	255031010001	滑轮支架焊合1	Pulley support welded 1	1	H>5400
30	255031010002	滑轮支架焊合2	Pulley support welded 2	1	H<=5400

293098501052门架(两级全自由门架)/MAST(two stage full free)

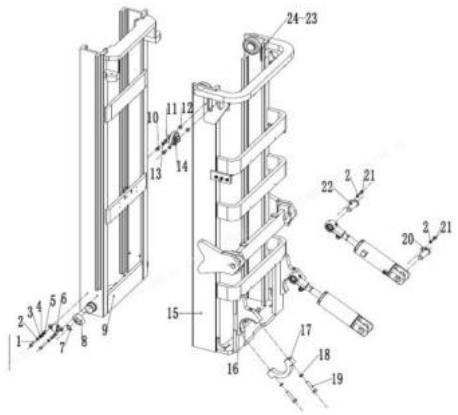

序号/NO	编码/SN	名称	Name	数量/QTY	备注/Remark
1	910100300039	螺栓GB5783-M10x40-8.8	Bolt GB5783-M10x40-8.8	4	
2	910400500007	弹簧垫圈GB93-10	Washer GB93-10	8	
3	910400100007	平垫圈GB97.1-10-200HV	Washer GB97.1-10-200HV	4	
4	255038020009	调整垫	Adjustable pad	8	
5	255038020008	调整套	Adjusting sleeve	4	
6	940200200005	侧滚轮Φ42-CD=68	Side rollerΦ42 - CD = 68	2	
7	910401300024	轴用弹性挡圈	Elastic retaining ring for shaft	4	
8	940200300013	复合滚轮Φ111-range=53-58	RollerΦ111-range=53-58	4	
8	940200300029	复合滚轮Φ111.5-range=53-58	RollerΦ111.5-range=53-58	4	
9	293043512001	内门架焊合 2000	Inner mast(2000)	1	3.0-3.5T
9	293043512002	内门架焊合 2500	Inner mast 2500	1	3.0-3.5T
9	293043512003	内门架焊合 3000	Inner mast 3000	1	3.0-3.5T
9	293043512004	内门架焊合 3300	Inner mast 3300	1	3.0-3.5T
9	293043512005	内门架焊合 3500	Inner mast 3500	1	3.0-3.5T
9	293043512006	内门架焊合 3600	Inner mast 3600	1	3.0-3.5T
9	293043512007	内门架焊合 3700	Inner mast 3700	1	3.0-3.5T
9	293043512008	内门架焊合 4000	Inner mast 4000	1	3.0-3.5T
9	255043510027	内门架焊合 2000	Inner mast(2000)	1	2.5T
9	255043510028	内门架焊合 2500	Inner mast 2500	1	2.5T
9	255043510029	内门架焊合 3000	Inner mast 3000	1	2.5T
9	255043510030	内门架焊合 3300	Inner mast 3300	1	2.5T
9	255043510031	内门架焊合 3500	Inner mast 3500	1	2.5T
9	255043510032	内门架焊合 3600	Inner mast 3600	1	2.5T
9	255043510033	内门架焊合 3700	Inner mast 3700	1	2.5T
9	255043510034	内门架焊合 4000	Inner mast 4000	1	2.5T
10	910100300050	螺栓GB5783-M12x30-8.8	Bolt GB5783-M12x30-8.8	4	
11	910400100008	平垫圈GB97.1-12-200HV	Washer GB97.1-12-200HV	4	
12	256544002001	垫圈Φ20xΦ13集合图	Washer Φ20xΦ13	4	
13	910400500008	弹簧垫圈GB93-12	Washer GB93-12	4	
14	940200200002	侧滚轮Φ87-CD=55	Side roller Φ87-CD=55	2	
15	293043511001	外门架焊合 2000	Outer mast 2000	1	3.0-3.5T

293098501052门架(两级全自由门架)/MAST(two stage full free)

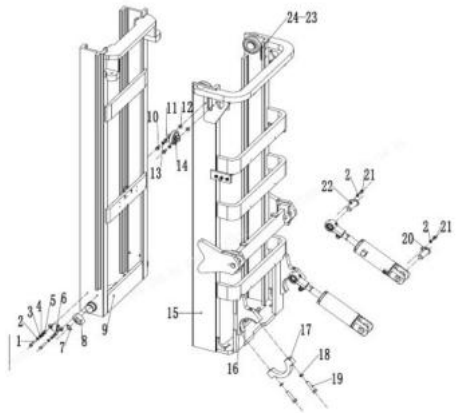

序号/NO	编码/SN	名称	Name	数量/QTY	备注/Remark
15	293043511002	外门架焊合 2500	Outer mast 2500	1	3.0-3.5T
15	293043511003	外门架焊合 3000	Outer mast 3000	1	3.0-3.5T
15	293043511004	外门架焊合 3300	Outer mast 3300	1	3.0-3.5T
15	293043511005	外门架焊合 3500	Outer mast 3500	1	3.0-3.5T
15	293043511006	外门架焊合 3600	Outer mast 3600	1	3.0-3.5T
15	293043511007	外门架焊合 3700	Outer mast 3700	1	3.0-3.5T
15	293043511008	外门架焊合 4000	Outer mast 4000	1	3.0-3.5T
15	293143511001	外门架焊合 2000	Outer mast 2000	1	2.5T
15	293143511002	外门架焊合 2500	Outer mast 2500	1	2.5T
15	293143511003	外门架焊合 3000	Outer mast 3000	1	2.5T
15	293143511004	外门架焊合 3300	Outer mast 3300	1	2.5T
15	293143511005	外门架焊合 3500	Outer mast 3500	1	2.5T
15	293143511006	外门架焊合 3600	Outer mast 3600	1	2.5T
15	293143511007	外门架焊合 3700	Outer mast 3700	1	2.5T
15	293143511008	外门架焊合 4000	Outer mast 4000	1	2.5T
16	254144020063	轴瓦	Bearing bush	2	
17	256844021014	支座盖	Bearing cover	2	
18	910400500010	弹簧垫圈GB93-16	Washer GB93-16	7	
19	910100200016	螺栓GB5785-M16x1.5x70-8.8	Bolt GB5785-M16x1.5x70-8.8	4	
20	255044010057	带耳轴Φ30x82	Axle Φ30x82	2	
21	910100300035	螺栓GB5783-M10x20-8.8	Bolt GB5783-M10x20-8.8	4	
22	256844501001	带耳轴Φ30x94	Axle Φ30x94	2	
23	255044020132	调整垫片t=0.8	Adjusting pad t=0.8	2	
23	255044020133	调整垫片t=0.5	Adjusting pad t=0.5	2	
23	255044020134	调整垫片t=0.2	Adjusting pad t=0.2	2	
24	255044020131	垫板	Base plate	2	

293098501053货叉架(两级全自由门架)/FORK ARM CARRIER(two stage full free)

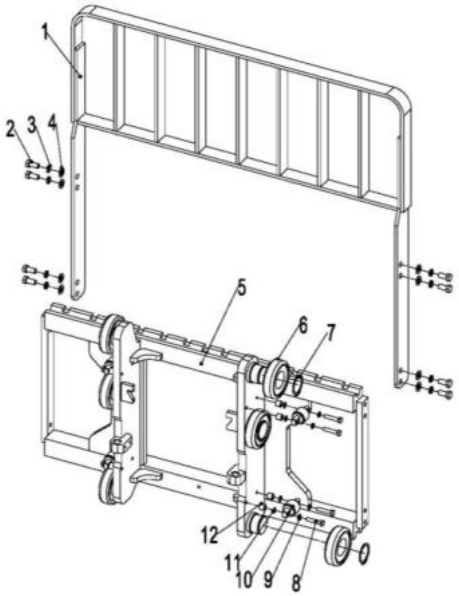

序号/NO	编码/SN	名称	Name	数量/QTY	备注/Remark
1	253540510001	挡货架焊合(1100x1080)	Load backrest welding	1	3.0-3.5T
1	255040510001	挡货架焊合(1040x986)	Load backrest welding (1040x986)	1	2.5T
2	910100300062	螺栓GB5783-M14x30-8.8	Bolt GB5783-M14x30-8.8	4	
3	910400500009	弹簧垫圈GB93-14	Washer GB93-14	4	
4	910400100009	平垫圈GB97.1-14-200HV	Washer GB97.1-14-200HV	4	
5	256838012001	货叉架焊合(两级全自由门架)	Fork carrier weldind (two stage full free)	1	3.0-3.5T
5	255038015001	货叉架焊合(两级全自由门架)	Fork carrier weldind (two stage full free)	1	2.5T
6	940200100020	主滚轮Φ119.2xΦ55x34	Main roller Φ119.2xΦ55x34	6	选装
6	940200100021	主滚轮Φ119.6xΦ55x34	Main roller Φ119.6xΦ55x34	6	选装
6	940200100022	主滚轮Φ120xΦ55x34	Main roller Φ120xΦ55x34	6	选装
7	910401300026	轴用弹性挡圈GB894.1-55	Circlip GB894.1-55	6	
8	910100300042	螺栓GB5783-M10x60-8.8	Bolt GB5783-M10x60-8.8	8	
9	910400500007	弹簧垫圈GB93-10	Washer GB93-10	8	
10	940200200005	侧滚轮Φ42-CD=68	Side roller Φ 42 - CD = 68	4	
11	255038020009	调整垫	Adjustable pad	24	
12	255038020008	调整套	Adjusting sleeve	8	

293098501054短起升油缸(两级全自由门架)/SHORT LIFTING CYLINDER (two stage full free)

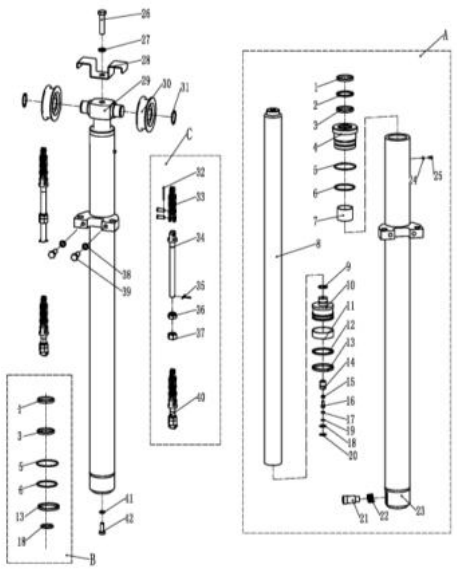

序号/NO	编码/SN	名称	Name	数量/QTY	备注/Remark
A	255043510068	油缸(M)(H=3000)	Cylinder (M)Φ85xΦ60x772(H=3000)	1	包含/Inc.1-25
A	255043510066	油缸(M)(H=2000)	Cylinder (M)Φ85xΦ60x522(H=2000)	1	
A	255043510067	油缸(M)(H=2500)	Cylinder (M)Φ85xΦ60x647(H=2500)	1	
A	255043510069	油缸(M)(H=3300)	Cylinder (M)Φ85xΦ60x847(H=3300)	1	
A	255043510070	油缸(M)(H=3500)	Cylinder (M)Φ85xΦ60x897(H=3500)	1	
A	255043510071	油缸(M)(H=3600)	Cylinder (M)Φ85xΦ60x922(H=3600)	1	
A	255043510072	油缸(M)(H=3700)	Cylinder (M)Φ85xΦ60x947(H=3700)	1	
A	255043510073	油缸(M)(H=4000)	Cylinder (M)Φ85xΦ60x1047(H=4000)	1	
B	255098510004	密封件修理包(二级全自由中间缸)	Seal kits (two stage full free middle cylinder)	1	包含 (Inc.1,2,5,6,13,18
C	256143514001	起升链条LH1634-39	Lifting chain LH1634-39	2	H=2000
C	256143514002	起升链条LH1634-49	Lifting chain LH1634-49	2	H=2500
C	254043510055	起升链条LH1634-57	Lifting chain LH1634-57	2	H=3000
C	263043510059	起升链条LH1634-63	Lifting chain LH1634-63	2	H=3300
C	254043510057	起升链条LH1634-67	Lifting chain LH1634-67	2	H=3500
C	254044010054	起升链条LH1634-61	Lifting chain LH1634-61	2	H=3600
C	254044010054	起升链条LH1634-61	Lifting chain LH1634-61	2	H=3700
C	256144014001	起升链条LH1634-69	Lifting chain LH1634-69	2	H=4000
1	▲	防尘圈	Dust ring 60x74x8/11	1	
2	▲	挡片60×70×3	Catch 60×70×3	1	
3	▲	轴用密封圈	Seal ring 60×70×6	1	
4	▲	导向套	Guide sleeve	1	
5	▲	O型密封圈	O ring 84.4x3.1	1	
6	▲	O型密封圈	O ring 77.5×3.55	1	
7	▲	钢背轴承6035	Bearing 6035	1	
8	▲	活塞杆	Piston rod	1	
9	▲	钢丝挡圈	Circlip	1	
10	▲	活塞总成	Piston assembly	1	
11	▲	支承环D85x20x2.5	Back up ring D85x20x2.5	1	
12	▲	挡圈85x70x3	Circlip 85x70x3	1	
13	▲	密封圈	Seal ring 85x70x9	1	
14	▲	阀套	Valve bushing	1	

293098501054短起升油缸(两级全自由门架)/SHORT LIFTING CYLINDER (two stage full free)

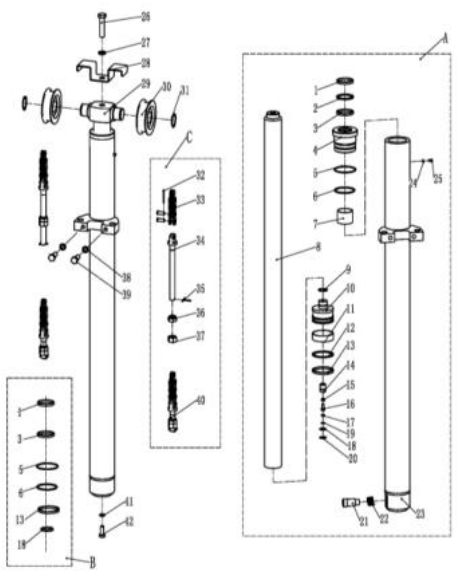

序号/NO	编码/SN	名称	Name	数量/QTY	备注/Remark
15	▲	弹簧	Spring	1	
16	▲	阀芯	Valve plug	1	
17	▲	挡片	Catch	1	
18	▲	O型密封圈	O ring D15.8x2.4	1	
19	▲	挡圈φ12	Circlip φ12	1	
20	▲	挡圈φ22	Circlip φ22	1	
21	▲	滑阀	Slide valve	1	
22	▲	弹簧	Spring	1	
23	▲	缸体	Cylinder	1	
24	▲	垫片	Spacer	1	
25	▲	螺钉M5x5	Screw M5x5	1	
26	910100100071	螺栓GB5782-M16x50-8.8	Bolt GB5782-M16x50-8.8	1	
27	910400500010	弹簧垫圈GB93-16	Washer GB93-16	1	
28	255043520020	挡链板	Chain plate	1	
29	255043520006	缸头	Cylinder head	1	
30	940200500001	链轮轴承780708K-φ110xφ40x27	Chain wheel bearing 780708K-φ110xφ40x27	1	
31	910401300020	轴用弹性挡圈GB894.1-40	Circlip GB894.1-40	1	
32	▲	开口销2.5x40	Split pin2.5x40	2	
33	▲	LH1623板式链	LH1623 chain	2	
34	▲	长端接头	Joint	2	
35	▲	开口销3.2x30	Split pin 3.2x30	2	
36	▲	球面螺母M18x1.5	Nut M18x1.5	2	
37	▲	螺母M18x1.5	Nut M18x1.5	2	
38	910400500009	弹簧垫圈GB93-14	Washer GB93-14	2	
39	910100400022	螺栓GB5786-M14x1.5x40-8.8	Bolt GB5786-M14x1.5x40-8.8	2	
40	▲	短端接头	Joint	2	
41	910400500008	弹簧垫圈GB93-12	SpringWasherGB93-12	1	
42	910100400009	螺栓GB5786-M12x1.25x25-8.8	BoltGB5786-M12x1.25x25-8.8	1	

293098501055起升油缸(两级全自由门架)/LIFTING CYLINDER (two stage full free)

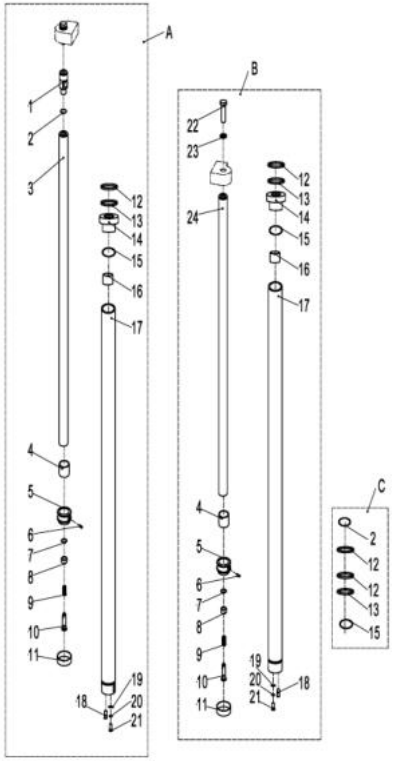

序号/NO	编码/SN	名称	Name	数量/QTY	备注/Remark
A	255043510040	油缸(L)(H=2000)	Cylinder (L)Φ50xΦ40x940(H=2000)	1	包含/Inc.1-21
A	255043510041	油缸(L)(H=2500)	Cylinder (L)Φ50xΦ40x1190(H=2500)	1	
A	255043510042	油缸(L)(H=3000)	Cylinder (L)Φ50xΦ40x1440(H=3000)	1	
A	255043510043	油缸(L)(H=3300)	Cylinder (L)Φ50xΦ40x1590(H=3300)	1	
A	255043510044	油缸(L)(H=3500)	Cylinder (L)Φ50xΦ40x1690(H=3500)	1	
A	255043510045	油缸(L)(H=3600)	Cylinder (L)Φ50xΦ40x1740(H=3600)	1	
A	255043510046	油缸(L)(H=3700)	Cylinder (L)Φ50xΦ40x1790(H=3700)	1	
A	255043510047	油缸(L)(H=4000)	Cylinder (L)Φ50xΦ40x1890(H=4000)	1	
B	255043510053	油缸(R)(H=2000)	Cylinder (R)Φ50xΦ40x940(H=2000)	1	包括/Inc.4-21.24
B	255043510054	油缸(R)(H=2500)	Cylinder (R)Φ50xΦ40x1190(H=2500)	1	
B	255043510055	油缸(R)(H=3000)	Cylinder (R)Φ50xΦ40x1440(H=3000)	1	
B	255043510056	油缸(R)(H=3300)	Cylinder (R)Φ50xΦ40x1590(H=3300)	1	
B	255043510057	油缸(R)(H=3500)	Cylinder (R)Φ50xΦ40x1690(H=3500)	1	
B	255043510058	油缸(R)(H=3600)	Cylinder (R)Φ50xΦ40x1740(H=3600)	1	
B	255043510059	油缸(R)(H=3700)	Cylinder (R)Φ50xΦ40x1790(H=3700)	1	
B	255043510060	油缸(R)(H=4000)	Cylinder (R)Φ50xΦ40x1890(H=4000)	1	
C	255098510002	密封件修理包(二级全自由起升缸)	Seal kits (two stage full free lifting cylinder)	2	包含/Inc. 2.12.13.15
1	▲	左连接杆	Connecting rod	1	
2	▲	O型密封圈	O ring 26x2.4	1	
3	▲	左柱塞杆总成	Piston rod assembly	1	
4	▲	调整套	Adjusting bushing	2	
5	▲	缓冲活塞	Piston	2	
6	▲	内六角凹端紧固螺钉M4x6	ScrewM4x6	2	
7	▲	钢丝挡圈Φ18	Circlip Φ18	2	
8	▲	铜套	Copper bushing	2	
9	▲	弹簧	Spring	2	
10	▲	缓冲柱塞	Buffer plunger	2	
11	▲	支承环50x45x15	Supporting ring 50x45x15	2	
12	▲	防尘圈	Dust ring DKB40x52x7/10	2	
13	▲	轴用密封圈	Seal ring 40x50x6	2	
14	▲	导向套	Guide bushing	2	

293098501055起升油缸(两级全自由门架)/LIFTING CYLINDER (two stage full free)

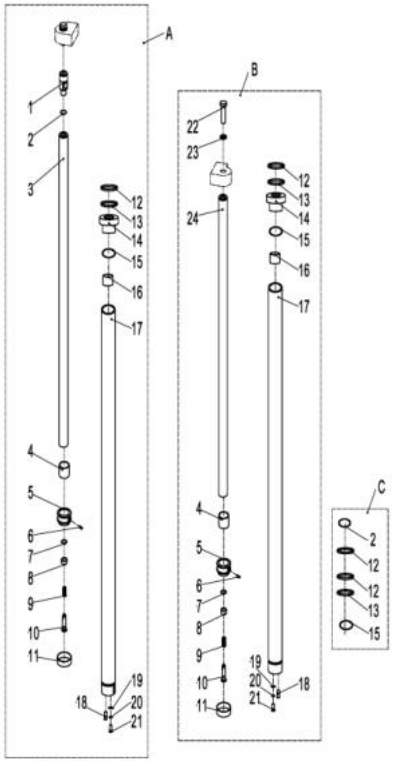

序号/NO	编码/SN	名称	Name	数量/QTY	备注/Remark
15	▲	O型密封圈	O ring 49.7x2.4	2	
16	▲	钢背轴承4030	Bearing 4030	2	
17	▲	缸体	Cylinder	2	
18	▲	圆柱销10x26	Dowel pin10x26	2	
19	910400100008	平垫圈GB97.1-12-200HV	Washer GB97.1-12-200HV	2	
20	910400500008	弹簧垫圈GB93-12	Washer GB93-12	2	
21	910100400009	螺栓GB5786-M12x1.25x25-8.8	Bolt GB5786-M12x1.25x25-8.8	2	
22	910100400029	螺栓GB5786-M16x1.5x40-8.8	Bolt GB5786-M16x1.5x40-8.8	2	
23	910400500010	弹簧垫圈GB93-16	Washer GB93-16	2	
24	▲	右柱塞杆总成	Plunger rod assembly	1	

293098501056起升管路(两级全自由门架)/LIFTING CYLINDER (two stage full free)

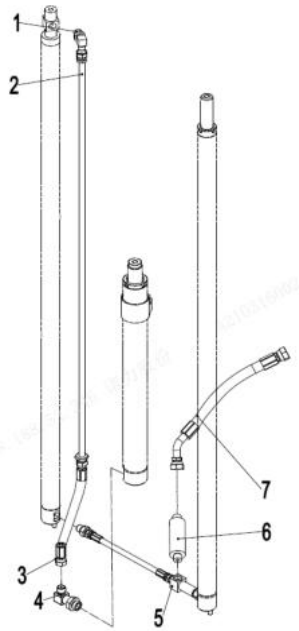

序号/NO	编码/SN	名称	Name	数量/QTY	备注/Remark
1	255043529001	接头(锁定弯)12-2xM22x1.5-60°	Joint 12-2xM22x1.5-60°	1	
2	255043520009	液压钢管焊合L=760	Rise steel pipe L=760	1	H=2000
2	255043520010	液压钢管焊合L=1010	Rise steel pipe L=1010	1	H=2500
2	255043520011	液压钢管焊合L=1300	Rise steel pipe L=1300	1	H=3000
2	255043520012	液压钢管焊合L=1460	Hydraulic pipe L=1460	1	H=3300
2	255043520013	液压钢管焊合L=1610	Hydraulic pipe L=1610	1	H=3500/3600/3700
2	255043520014	液压钢管焊合L=1850	Hydraulic pipe L=1850	1	H=4000
3	255044020119	液压管总成(直)13-L395-2SC-60°	Hydraulic hose assembly 13-L395-2SC-60°	1	
4	255043520022	接头(锁定弯)2-M27x2-M22x1.5	Joint 2-M27x2-M22x1.5	1	
5	255044010040	接头(三通)	Joint	1	
6	950700300002	限速阀XSF-F16L-48	Speed limit valveXSF-F16L-48	1	
7	263044020037	液压管总成(直)15-L800-2SC-60°	Hydraulic hose assembly (直)15-L800-2SC-60°	1	

293098501057单附加管路(两级全自由门架)/PIPELINEINSTALLATION (two stage full free)

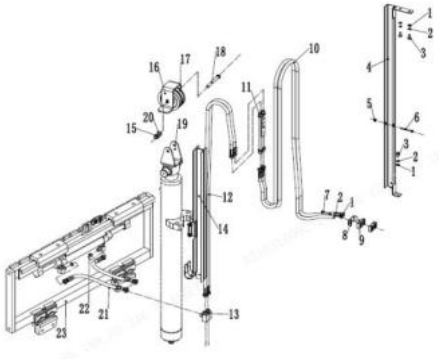

序号/NO	编码/SN	名称	Name	数量/QTY	备注/Remark
1	910400100006	平垫圈GB97.1-8-200HV	Washer GB97.1-8-200HV	11	
2	910400500006	弹簧垫圈GB93-8	Washer GB93-8	11	
3	910200200057	螺钉GB70.1-M8x20-8.8	Screw GB70.1-M8x20-8.8	7	
4	255028510001	外导槽焊合L=670	Groove welding L=670	1	H=2000
4	255028510002	外导槽焊合L=840	Groove welding L=840	1	H=2500
4	255028510003	外导槽焊合L=1090	Groove welding L=1090	1	H=3000
4	255028510004	外导槽焊合L=1240	Groove welding L=1240	1	H=3300/3500
4	255028510005	外导槽焊合L=1390	Groove welding L=1390	1	H=3600/3700
4	255028510006	外导槽焊合L=1640	Groove welding L=1640	1	H=4000
5	910300500003	螺母GB889.1-M6-10	Nut GB889.1-M6-10	2	
6	910200200046	螺钉GB70.1-M6x60-8.8	Screw GB70.1-M6x60-8.8	2	
7	910100300025	螺栓GB5783-M8x35-8.8	Bolt GB5783-M8x35-8.8	4	
8	255028520035	安装板(管夹)	Pipe press fixedly piank	1	
9	255028520034	胶管固定块	Hose fixing bloke	2	
10	252030520016	液压管总成（直）8-L2220-1SC-60°	Hydraulic hose assembly 8-L2220-1SC-60°	2	H=2000
10	254130520009	液压管总成（直）8-L2470-1SC-60°	Hydraulic hose assembly 8-L2470-1SC-60°	2	H=2500
10	263028520010	液压管总成（直）8-L2940-1SC-60°	Hydraulic hose assembly 8-L2940-1SC-60°	2	H=3000
10	255030520013	液压管总成（直）8-L3180-1SC-60°	Hydraulic hose assembly 8-L3180-1SC-60°	2	H=3300/3500
10	254128520039	液压管总成（直）8-L3250-1SC-60°	Hydraulic hose assembly 8-L3250-1SC-60°	2	H=3600/3700
10	255028520059	液压管总成（直）8-L3600-1SC-60°	Hydraulic hose assembly 8-L3600-1SC-60°	2	H=4000
11	255028510022	过渡钢管	Transition steel pipe	1	
12	255028520008	液压管总成(直)10-L1030-1SC-60°	Hydraulic hose assembly10-L1030-1SC-60°	2	H=2000
12	255028520009	液压管总成(直)10-L1280-1SC-60°	Hydraulic hose assembly10-L1280-1SC-60°	2	H=2500
12	255028520010	液压管总成(直)10-L1470-1SC-60°	Hydraulic hose assembly10-L1470-1SC-60°	2	H=3000
12	255028520011	液压管总成(直)10-L1620-1SC-60°	Hydraulic hose assembly10-L1620-1SC-60°	2	H=3300
12	255028520012	液压管总成(直)10-L1730-1SC-60°	Hydraulic hose assembly10-L1730-1SC-60°	2	H=3500
12	255028520013	液压管总成(直)10-L1550-1SC-60°	Hydraulic hose assembly10-L1550-1SC-60°	2	H=3600/3700
12	255028520015	液压管总成(直)10-L1770-1SC-60°	Hydraulic hose assembly10-L1770-1SC-60°	2	H=4000
13	255029020024	接头(锁定弯)8-2xM16x1.5-60°	Joint 8-2XM16x1.5-60°	2	
14	255028510011	内导槽焊合L=530	Groove welding L=530	1	
14	255028510012	内导槽焊合L=650	Groove welding L=650	1	

293098501057单附加管路(两级全自由门架)/PIPELINEINSTALLATION (two stage full free)

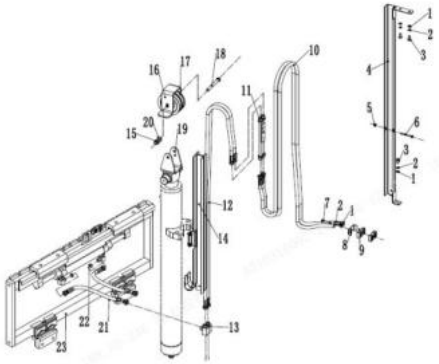

序号/NO	编码/SN	名称	Name	数量/QTY	备注/Remark
14	255028510013	内导槽焊合L=780	Groove welding L=780	1	
14	255028510014	内导槽焊合L=870	Groove welding L=870	1	
14	255028510015	内导槽焊合L=930	Groove welding L=930	1	
14	255028510016	内导槽焊合L=1030	Groove welding L=1030	1	
15	910300500006	螺母GB889.1-M12-10	Nut GB889.1-M12-10	1	
16	255028520043	挡板	board	1	
17	255030520021	滑轮Φ110x27(单槽)	Pulley Φ110x27	4	
18	910100100058	螺栓GB5782-M12x100-8.8	Bolt GB5782-M12x100-8.8	1	
19	255030520026	滑轮架体	Pulley frame	1	
20	910400100006	平垫圈GB97.1-8-200HV	Washer GB97.1-8-200HV	10	
21	255042520101	液压管总成(90°)10-L500-1SC-60°-0°	Hydraulic hose assembly (90°)10-L500-1SC-60°-0°	2	
22	910800100001	O形圈-内9.5x1.8	Oring 9.5x1.8	2	
23	255042510004	侧移器总成(LH)	Side shiifter assembly(LH)	1	
23	255042510001	侧移器总成(LD)	Side shiifter assembly(LD)	1	
23	255042510002	侧移器总成(卡斯卡特)	Side shiifter assembly(CASCADE)	1	

293098501058双附加管路(两级全自由门架)/PIPELINEINSTALLATION (two stage full free)

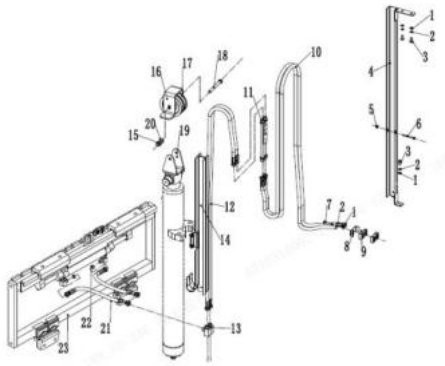

序号/NO	编码/SN	名称	Name	数量/QTY	备注/Remark
1	255029010001	外导槽焊合L=670	Groove welding L=670	1	H=2000
1	255029010002	外导槽焊合L=840	Groove welding L=840	1	H=2500
1	255029010003	外导槽焊合L=1090	Groove welding L=1090	1	H=3000
1	255029010004	外导槽焊合L=1240	Groove welding L=1240	1	H=3300/3500
1	255029010005	外导槽焊合L=1390	Groove welding L=1390	1	H=3600/3700
1	255029010006	外导槽焊合L=1640	Groove welding L=1640	1	H=4000
2	910400100006	平垫圈GB97.1-8-200HV	Washer GB97.1-8-200HV	10	
3	910400500006	弹簧垫圈GB93-8	Washer GB93-8	13	
4	910200200057	螺钉GB70.1-M8x20-8.8	Screw GB70.1-M8x20-8.8	13	
5	910300500003	螺母GB889.1-M6-10	Nut GB889.1-M6-10	3	
6	910200200046	螺钉GB70.1-M6x60-8.8	Screw GB70.1-M6x60-8.8	3	
7	255029020024	接头(锁定弯)8-2xM16x1.5-60°	Joint 8-2xM16x1.5-60°	4	
8	910100300025	螺栓GB5783-M8x35-8.8	Bolt GB5783-M8x35-8.8	4	
9	284023520003	液压管总成（90°）8-L2500-1SC-60°	Hydraulic hose assembly （90°）8-L2500-1SC-60°	2	H=2000
9	255028520042	液压管总成（90°）8-L2800-1SC-60°	Hydraulic hose assembly （90°）8-L2800-1SC-60°	2	H=2500
9	252028520022	液压管总成（90°）8-L3250-1SC-60°	Hydraulic hose assembly （90°）8-L3250-1SC-60°	2	H=3000
9	252030520003	液压管总成（90°）8-L3470-1SC-60°	Hydraulic hose assembly （90°）8-L3470-1SC-60°	2	H=3300/3500
9	255029020022	液压管总成（90°）8-L3550-1SC-60°	Hydraulic hose assembly（90°）8-L3550-1SC-60°	2	H=3600/3700
9	252030520014	液压管总成（90°）8-L3900-1SC-60°	Hydraulic hose assembly （90°）8-L3900-1SC-60°	2	H=4000
10	910300500006	螺母GB889.1-M12-10	Nut GB889.1-M12-10	1	
11	255028520043	挡板	board	1	
12	255030520021	滑轮Φ110x27(单槽)	Pulley Φ110x27	4	
13	910100100058	螺栓GB5782-M12x100-8.8	Bolt GB5782-M12x100-8.8	1	
14	910100300054	螺栓GB5783-M12x50-8.8	Bolt GB5783-M12x50-8.8	2	
15	910400200005	大垫圈GB96.1-12-200HV	Washer GB96.1-12-200HV	2	
16	255030520026	滑轮架体	Pulley frame	1	
17	255029010008	内导槽焊合L=530	Groove welding L=530	1	H=2000
17	255029010009	内导槽焊合L=650	Groove welding L=650	1	H=2500
17	255029010010	内导槽焊合L=780	Groove welding L=780	1	H=3000
17	255029010011	内导槽焊合L=870	Groove welding L=870	1	H=3300/3500
17	255029010012	内导槽焊合L=930	Groove welding L=930	1	H=3600/3700

293098501058双附加管路(两级全自由门架)/PIPELINEINSTALLATION (two stage full free)

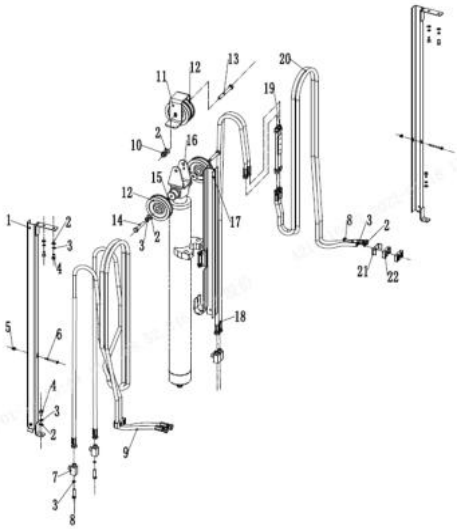

序号/NO	编码/SN	名称	Name	数量/QTY	备注/Remark
17	255029010013	内导槽焊合L=1030	Groove welding L=1030	1	H=4000
18	255029020009	液压管总成（直）8-L820-1SC-60°	Hydraulic hose assembly 8-L820-1SC-60°	2	H=2000
18	255029020010	液压管总成（直）8-L1070-1SC-60°	Hydraulic hose assembly 8-L1070-1SC-60°	2	H=2500
18	255029020011	液压管总成（直）8-L1260-1SC-60°	Hydraulic hose assembly 8-L1260-1SC-60°	2	H=3000
18	255029020012	液压管总成（直）8-L1410-1SC-60°	Hydraulic hose assembly 8-L1410-1SC-60°	2	H=3300
18	255029020013	液压管总成（直）8-L1510-1SC-60°	Hydraulic hose assembly 8-L1510-1SC-60°	2	H=3500
18	255029020014	液压管总成（直）8-L1340-1SC-60°	Hydraulic hose assembly 8-L1340-1SC-60°	2	H=3600/3700
18	255029020015	液压管总成（直）8-L1560-1SC-60°	Hydraulic hose assembly 8-L1560-1SC-60°	2	H=4000
19	255028510022	过渡钢管	Transition steel pipe	1	
20	252030520016	液压管总成（直）8-L2220-1SC-60°	Hydraulic hose assembly 8-L2220-1SC-60°	2	H=2000
20	254130520009	液压管总成（直）8-L2470-1SC-60°	Hydraulic hose assembly 8-L2470-1SC-60°	2	H=2500
20	263028520010	液压管总成（直）8-L2940-1SC-60°	Hydraulic hose assembly 8-L2940-1SC-60°	2	H=3000
20	255030520013	液压管总成（直）8-L3180-1SC-60°	Hydraulic hose assembly 8-L3180-1SC-60°	2	H=3300/3500
20	254128520039	液压管总成（直）8-L3250-1SC-60°	Hydraulic hose assembly 8-L3250-1SC-60°	2	H=3600/3700
20	255028520059	液压管总成（直）8-L3600-1SC-60°	Hydraulic hose assembly 8-L3600-1SC-60°	2	H=4000
21	255028520035	安装板(管夹)	Pipe press fixedly piank	2	
22	255028520034	胶管固定块	Hose fixing bloke	4	